SM No. CER000301132

PROPOSAL AND CONTRACT DOCUMENTS

FOR THE CONSTRUCTION OF

(NONEXEMPT)

-2
This work consists of driving timber piling & purchasing and delivering materials required to construct landing ramps and parking areas at Bay St. Louis and Henderson Point, known as Federal Aid Project No. ER-0003-01(132)/104634306 & 307, in the Counties of Hancock & Harrison, State of Mississippi.

Project Completion: October 20, 2006

Special One Week Advertisement for September 11, 2006 Letting

NOTICE

BIDDERS MUST PURCHASE A BOUND PROPOSAL
FROM MDOT CONTRACT ADMINISTRATION DIVISION
TO BID ON THIS PROJECT.

Electronic addendum updates will be posted on www.goMDOT.com

SECTION 900

OF THE CURRENT
(2004) STANDARD SPECIFICATIONS
FOR ROAD AND BRIDGE CONSTRUCTION
MISSISSIPPI DEPARTMENT OF TRANSPORTATION

JACKSON, MISSISSIPPI

BIDDER CHECK LIST
(FOR INFORMATION ONLY)

_____ All unit prices and item totals have been entered in accordance with Subsection 102.06 of the Mississippi Standard Specifications for Road and Bridge Construction.

_____ If the bid sheets were prepared using MDOT's Electronic Bid System, proposal sheets have been stapled and inserted into the proposal package.

_____ First sheet of SECTION 905--PROPOSAL has been completed.

_____ Second sheet of SECTION 905--PROPOSAL has been completed and signed.

_____ Addenda, if any, have been acknowledged. Second sheet of Section 905 listing the addendum number has been substituted for the original second sheet of Section 905. Substituted second sheet of Section 905 has been properly completed, signed, and added to the proposal.

_____ DBE/WBE percentage, when required by contract, has been entered on last sheet of the bid sheets of SECTION 905 - PROPOSAL.

_____ Form OCR-485, when required by contract, has been completed and signed.

_____ The last sheet of the bid sheets of SECTION 905--PROPOSAL has been signed.

_____ Combination Bid Proposal of SECTION 905--PROPOSAL has been completed for each project which is to be considered in combination (See Subsection 102.11).

_____ Equal Opportunity Clause Certification, when included in contract, has been completed and signed.

_____ Subcontract Certificate, when included in contract, has been completed and signed.

_____ The Certification regarding Non-Collusion, Debarment and Suspension, etc. has been executed in duplicate.

_____ A certified check, cashier's check or bid bond payable to the State of Mississippi in the principal amount of 5% of the bid has been included with project number identified on same. Bid bond has been signed by the bidder and has also been signed or countersigned by a Mississippi Resident Agent for the Surety with Power of Attorney attached or on file with the Department's Contract Administration Engineer.

_____ Non-resident Bidders: ON STATE FUNDED PROJECTS ONLY, a copy of the current laws regarding any preference for local Contractors from State wherein domiciled has been included. See Subsection 103.01, Mississippi Standard Specifications for Road and Bridge Construction, and Section 31-7-47, MCA, 1972 regarding this matter.

Return the proposal and contract documents in its entirety in a sealed envelope. DO NOT remove any part of the contract documents; exception - an addendum requires substitution of second sheet of Section 905. A stripped proposal is considered as an irregular bid and will be rejected.

Failure to complete any or all of the applicable requirements will be cause for the proposal to be considered irregular.

(09/2004)

MISSISSIPPI DEPARTMENT OF TRANSPORTATION

TABLE OF CONTENTS

PROJECT: ER-0003-01(132) / 104634306 & 307 -- Hancock & Harrison County

901--Advertisement

904--Notice to Bidders:
- Governing Specs. - # 1
- Status of ROW, Utility Adjustments and Underground Storage Tanks, W/Attachments - # 2
- Federal Bridge Formula - # 12
- Submission of Form OCR-485 - # 13
- Disadvantage Business Enterprise W/Supplement - # 696
- On-The-Job Training Program - # 777
- DBE Participation and Payment - # 882
- Payroll Requirements - # 883
- Errata & Modifications to 2004 Standard Specifications - # 935
- Petroleum Products Base Price - # 1122
- Contract Time - # 1177
- Proposal Documents - # 1179
- Scope of Work - # 1180
- Subcontracting - # 1183

906: Required Federal Contract Provisions -- FHWA-1273, W/Supplement
907-105-3: Cooperation By Contractors
907-107-1: Liability Insurance, W/Supplement
907-107-2: Permits License, and Taxes
907-107-3: Contractor's Protection Plan
907-108-11: Prosecution and Progress
907-109-3: Partial Payment
907-304-4: Crushed Stone Granular Courses
906-3: MDOT On-the-Job Training Program
906-6: MDOT On-the-Job Training Program - Alternate Program

SECTION 905 - PROPOSAL,
PROPOSAL SHEET NOS. 2-1 THRU 2-4,
COMBINATION BID PROPOSAL,
CERTIFICATE OF PERFORMANCE - PRIOR FEDERAL-AID CONTRACTS,
NON-COLLUSION CERTIFICATE,
SECTION 902 - CONTRACT FORM, AND SECTION 903 - CONTRACT BOND FORM,
OCR-481 & OCR-485,
HAUL PERMIT FOR BRIDGES WITH POSTED WEIGHT LIMITS.

(REVISIONS TO THE ABOVE WILL BE INDICATED ON THE SECOND SHEET OF SECTION 905 AS ADDENDA)

MISSISSIPPI DEPARTMENT OF TRANSPORTATION

SPECIAL ADVERTISMENT FOR A SEPTEMBER 11, 2006 LETTING

Sealed bids will be received by the Mississippi Transportation Commission in the Office of the Contract Administration Engineer, Room 1013, Mississippi Department of Transportation Office Administration Building, 401 North West Street, Jackson, Mississippi, until 10:00 o'clock A.M., Monday, September 11, 2006, and shortly thereafter publicly opened for:

This work consists of driving timber piling & purchasing and delivering materials required to construct landing ramps and parking areas at Bay St. Louis and Henderson Point, known as Federal Aid Project No. ER-0003-01(132)/104634306 & 307, in the Counties of Hancock & Harrison, State of Mississippi.

Project Completion: October 20, 2006

For Federal Aid Projects the attention of bidders is directed to the contract provisions governing selection and employment of labor contained in the bid proposal. Minimum wage rates for Federal Aid Projects have been predetermined by the Secretary of Labor and are subject to Public Law 87-581, Work Hours Act of 1962, as set forth in the contract provisions. Unless otherwise set out in the bid proposal, all other projects are subject to the predetermined minimum wage rate set by the U. S. Department of Labor under the Fair Labor Standards Act.

The Mississippi Department of Transportation hereby notifies all bidders that it will affirmatively insure that in any contract entered into pursuant to this advertisement, disadvantaged business enterprises will be afforded full opportunity to submit bids in response to this invitation and will not be discriminated against on the grounds of race, color, sex, religion or national origin in consideration for an award.

When a DBE goal is contained in the contract, the award will be contingent upon the Contractor satisfying the DBE requirements.

Plans and specifications are on file in the offices of the Mississippi Department of Transportation.

Bid or specimen proposals must be acquired from the Contract Administration Division. These proposals are available at a cost of Ten Dollars ($10.00) per proposal. Proposals may be purchased from the Contract Administration Engineer, MDOT Administration Building, 401 North West Street, P. O. Box 1850, Jackson, 39215-1850, Telephone No. (601) 359-7744, Fax No. (601) 359-7732 or purchased online at www.gomdot.com.

MISSISSIPPI DEPARTMENT OF TRANSPORTATION

SECTION 904 - NOTICE TO BIDDERS NO. 1 **CODE: (IS)**

DATE: **05/03/2004**

SUBJECT: **Governing Specifications**

The current (2004) Edition of the Standard Specifications for Road and Bridge Construction adopted by the Mississippi Transportation Commission is made a part hereof fully and completely as if it were attached hereto, except where superseded by special provisions, or amended by revisions of the Specifications contained herein. Copies of the specification book may be purchased from the MDOT Construction Division.

A reference in any contract document to controlling requirements in another portion of the contract documents shall be understood to apply equally to any revision or amendment thereof included in the contract.

In the event the plans or proposal contain references to the 1990 Edition of the Standard Specifications for Road and Bridge Construction, it is to be understood that such references shall mean the comparable provisions of the 2004 Edition of the Standard Specifications.

MISSISSIPPI DEPARTMENT OF TRANSPORTATION

SECTION 904 - NOTICE TO BIDDERS NO. 2 **CODE: (IS)**

DATE: **05/03/2004**

SUBJECT: **Status of Right-of-Way, Utility Adjustments and Potentially Contaminated Sites**

Although it is desirable to have acquired all rights-of-way and completed all utility adjustments and work to be performed by others prior to receipt of bids, it is not considered to be in the public interest to wait until each and every such clearance has been obtained. The bidder is hereby advised of unacquired rights-of-way, relocatees and utilities which have not been completed.

The status of right-of-way and utility adjustments and potentially contaminated sites are set forth in attachments entitled "Status of Right-of-Way", "Status of Utility Adjustments" and "Status of Potentially Contaminated Sites."

In the event right of entry is not available to ALL parcels of right-of-way and all work complete that is to be accomplished by others on the date set forth in the contract for the Notice to Proceed, the Department will issue a restricted Notice to Proceed upon written request of the Contractor.

STATUS OF RIGHT-OF-WAY
ER-0003-01(123))
104634/303000
HARRISON COUNTY
ER-0003-01(131)
104634/304000 & 305000
HARRISON & HANCOCK COUNTIES
ER-0003-01(132)
104634/306000 & 104634/307000
HARRISON & HANCOCK COUNTIES
August 31, 2006

All rights of way and legal rights of entry have been acquired, **except**:

Leases of public trust tidelands are being submitted to the Office of the Secretary of State for execution. The leases are expected to be approved by September 11, 2006.

ASBESTOS CONTAMINATION STATUS OF BUILDINGS
TO BE REMOVED BY THE CONTRACTOR
ER-0003-01(123)
104634/303000
HARRISON COUNTY
ER-0003-01(131)
104634/304000 & 305000
HARRISON & HANCOCK COUNTIES
ER-0003-01(132)
104634/306000 & 307000
HARRISON & HANCOCK COUNTIES
August 31, 2006

Reference is made to notices to bidders entitled "Asbestos National Emission Standards for Hazardous Air Pollutants (NESHAP)" AND "Removal of Obstructions".

The following pertinent information is furnished concerning asbestos containing materials (ACMs), if any, found in buildings to be removed by the Contractor.

This project will be constructed on public beach and jetty. There are no buildings to be removed.

STATUS OF POTENTIALLY CONTAMINATED SITES
ER-0003-01(123)
104634/303000
HARRISON COUNTY
ER-0003-01(131)
104634/304000 & 305000
HARRISON & HANCOCK COUNTIES
ER-0003-01(132)
104634/306000 & 307000
HARRISON & HANCOCK COUNTIES
August 31, 2006

This project has been inspected and there was no visible indication of potentially contaminated sites. **Please note**:

> The MDOT should be notified if any suspect hazardous wastes, e.g. drums, barrels, highly discolored soils, etc., are encountered so that these materials may be tested to determine proper disposal methods.

STATUS OF UTILITIES
PROJECT NO. ER-0003-01(132) – 104634/306000
HARRISON COUNTY

All work associated with this project is to be done within existing rights-of-way. No conflict with contractor's operations is anticipated.

Forty-eight hours prior commencing any excavation operations the contractor is advised to call MS One-Call at 1-800-227-6477.

STATUS OF UTILITIES
PROJECT NO. ER-0003-01(132) – 104634/307000
HANCOCK COUNTY

All work associated with this project is to be done within existing rights-of-way. No conflict with contractor's operations is anticipated.

Forty-eight hours prior commencing any excavation operations the contractor is advised to call MS One-Call at 1-800-227-6477.

MISSISSIPPI DEPARTMENT OF TRANSPORTATION

SECTION 904 - NOTICE TO BIDDERS NO. 12 **CODE: (IS)**

DATE: **05/03/2004**

SUBJECT: **Federal Bridge Formula**

Bidders are hereby advised that Federal Highway Administration Publication No. FHWA-MC-94-007, **BRIDGE FORMULA WEIGHTS**, dated January 1994, is made a part of this contract when applicable.

Prior to the preconstruction conference, the Contractor shall advise the Engineer, in writing, what materials, if any, will be delivered to the jobsite via Interstate route(s).

Copies of the **BRIDGE FORMULA WEIGHTS** publication may be obtained by contacting:

Federal Highway Administration
400 7th Street, SW
Washington, DC 20590
(202) 366-2212

or

http://ops.fhwa.dot.gov/freight/regulate/sw/

MISSISSIPPI DEPARTMENT OF TRANSPORTATION

SECTION 904 - NOTICE TO BIDDERS NO. 13 **CODE: (IS)**

DATE: **05/03/2004**

SUBJECT: **Submission of Form OCR-485**

Bidders are hereby advised that Form OCR-485 will be completed by **ALL BIDDERS** submitting a bid proposal and **must be included in the bid proposal package**. Failure to include Form OCR-485 in the bid proposal package will cause the Contractor's bid to be considered **irregular**.

SUPPLEMENT TO NOTICE TO BIDDERS NO. 696

DATE: 08/17/2006

The goal is 0 percent for the Disadvantaged Business Enterprise. The low bidder is required to submit Form OCR-481 for all DBEs. Bidders are advised to check the bid tabulation link for this project on the MDOT website (http://www.gomdot.com/bidsystem/) for results. Bid tabulations are usually posted by 3:00 pm on Letting Day.

Form OCR-481 is available at http://www.gomdot.com/business/dbe/pdf/OCR_481.pdf or by calling 601-359-7466.

All OCR-481s must be returned within 10 days following the bid letting to the MDOT Office of Civil Rights, P.O. Box 1850, Jackson, MS 39215-1850.

For answers to questions, contact the MDOT Office of Civil Rights at (601) 359-7466.

The bidder's execution of the signature portion of the proposal shall constitute execution of the following assurance:

> The bidder hereby gives assurance pursuant to the applicable requirements of "Safe, Accountable, Flexible, Efficient Transportation Equity Act, A Legacy For Users (SAFETEA-LU)" and "Part 26, Title 49, Code of Federal Regulation" that the bidder has made a good faith effort to meet the contract goal for DBE participation for which this proposal is submitted.

A pre-bid meeting will be held in Amphitheater 1 & 2 of the Hilton Jackson located at I-55 and County Line Road, Jackson, Mississippi at 2:00 P.M. on the day preceding the date of the bid opening.

This meeting is to inform DBE firms of subcontracting and material supply opportunities. Attendance at this meeting is considered of prime importance in demonstrating good faith effort to meet the contract goal.

MISSISSIPPI DEPARTMENT OF TRANSPORTATION

SECTION 904 - NOTICE TO BIDDERS NO. 696 **CODE: (IS)**

DATE: **12/20/2005**

SUBJECT: DISADVANTAGED BUSINESS ENTERPRISES IN FEDERAL-AID HIGHWAY CONSTRUCTION

This contract is subject to the "Safe, Accountable, Flexible, Efficient Transportation Equity Act, A Legacy For Users (SAFETEA-LU)" and applicable requirements of "Part 26, Title 49, Code of Federal Regulations." Portions of the Act are set forth in this Notice as applicable to compliance by the Contractor and all of the Act, and the MDOT DBE Program, is incorporated by reference herein.

The Department has developed a Disadvantaged Business Enterprise Program that is applicable to this contract and is made a part thereof by reference.

Copies of the program may be obtained from:

Office of Civil Rights
Mississippi Department of Transportation
P. O. Box 1850
Jackson, Mississippi 39215-1850

POLICY

It is the policy of the Mississippi Department of Transportation to provide a level playing field, to foster equal opportunity in all federally assisted contracts, to improve the flexibility of the DBE Program, to reduce the burdens on small businesses, and to achieve that amount of participation that would be obtained in a non-discriminatory market place. In doing so, it is the policy of MDOT that there will be no discrimination in the award and performance of federally assisted contracts on the basis of race, color, sex, age, religion, national origin, or any handicap.

ASSURANCES THAT CONTRACTORS MUST TAKE:

MDOT will require that each contract which MDOT signs with a subrecipient or a Contractor, and each subcontract the Prime Contractor signs with a Subcontractor, includes the following assurances:

"The Contractor, subrecipient or Subcontractor shall not discriminate on the basis of race, color, national origin, or sex in the performance of this contract. The Contractor shall carry out applicable requirements of 49 CFR 26 in the award and administration of federally assisted contracts. Failure by the Contractor to carry out these requirements is a material breach of this contract, which may result in the termination of this contract or such other remedy as MDOT deems appropriate."

DEFINITIONS

For purposes of this provision the following definitions will apply:

"Disadvantaged Business" means a small business concern: (a) which is at least 51 percent owned by one or more socially and economically disadvantaged individual(s) or in the case of any publicly owned business, at least 51 percent of the stock of which is owned by one or more socially and economically disadvantaged individual(s); and (b) whose management and daily business operations are controlled by one or more of the socially and economically disadvantaged individual(s) who own it. It is important to note that the business owners themselves must control the operations of the business. Absentee ownership or title ownership by an individual who does not take an active role in controlling the business is not consistent with eligibility as a DBE under CFR 49 Part 26.71.

CONTRACTOR'S OBLIGATION

The Contractor and all Subcontractors shall take all necessary and reasonable steps to ensure that DBE firms can compete for and participate in the performance of a portion of the work in this contract and shall not discriminate on the basis of race, color, national origin, religion or sex. Failure on the part of the Contractor to carry out the DBE requirements of this contract constitutes a breach of contract and after proper notification the Department may terminate the contract or take other appropriate action as determined by the Department.

When a contract requires a zero percent (0%) DBE goal, the Contractor still has the responsibility to take all necessary and reasonable steps to ensure that DBE firms can compete for and participate in the performance of the work in the contract. In this case, all work performed by a certified DBE firm is considered to be a "race neutral" measure and the Department will receive DBE credit towards the overall State goals when the DBE firm is paid for their work. If the Prime Contractor is a certified DBE firm, the Department can receive DBE credit only for the work performed by the Prime Contractor's work force or any work subcontracted to another DBE firm. Work performance by a non-DBE Subcontractor is not eligible for DBE credit.

CONTRACT GOAL

The goal for participation by DBEs is established for this contract in the attached Supplement. The Contractor shall exercise all necessary and reasonable steps to ensure that participation is equal to or exceeds the contract goal.

The percentage of the contract that is proposed for DBEs shall be so stated on the last bid sheet of the proposal.

The apparent lowest responsive bidder shall submit to the Contract Administration Division Form OCR-481, signed by the Prime Contractor and the DBE Subcontractors, no later than the 10th day after opening of the bids.

FORMS ARE AVAILABLE FROM THE CONTRACT ADMINISTRATION DIVISION

The OCR-481 Form must contain the following information:

The name and address of each certified DBE Contractor / Supplier;

The Reference Number, percent of work and the dollar amount of each item. If a portion of an item is subcontracted, a breakdown of that item including quantities and unit price must be attached, detailing what part of the item the DBE firm is to perform and who will perform the remainder of the item.

If the DBE Commitment shown on the last bid sheet of the proposal, does not equal or exceed the contract goal, the bidder must submit, with the proposal, information to satisfy the Department that adequate good faith efforts have been made to meet the contract goal.

Failure of the lowest bidder to furnish acceptable proof of good faith efforts, submitted with the bid proposal, shall be just cause for rejection of the proposal. Award may then be made to the next lowest responsive bidder or the work may be readvertised.

The following factors are illustrative of matters the Department will consider in judging whether or not the bidder has made adequate good faith effort to satisfy the contract goal.

(1) Whether the bidder attended the pre-bid meeting that was scheduled by the Department to inform DBEs of subcontracting opportunities;

(2) whether the bidder advertised in general circulation, trade association, and minority-focus media concerning the subcontracting opportunities;

(3) whether the bidder provided written notice to a reasonable number of specific DBEs that their interest in the contract is being solicited;

(4) whether the bidder followed up initial solicitations of interest by contacting DBEs to determine with certainty whether they were interested;

(5) whether the bidder selected portions of the work to be performed by DBEs in order to increase the likelihood of meeting the contract goal;

(6) whether the bidder provided interested DBEs with adequate information about the plans, specifications and requirements of the contract;

(7) whether the bidder negotiated in good faith with interested DBEs and did not reject them as unqualified without sound reasons based on a thorough investigation of their capabilities; and

(8) whether the bidder made efforts to assist interested DBEs in obtaining any required bonding or insurance.

DIRECTORY

Included with this Bid Proposal is a list of "Certified DBE Contractors" which have been certified as such by the Mississippi Department of Transportation and other Unified Certification Partners (UCP).

The DBE firm must be on the Department's list of "Certified DBE Contractors" that is attached to this proposal and approved by MDOT to count towards meeting the DBE goal.

REPLACEMENT

If a DBE Subcontractor cannot perform satisfactorily, and this causes the OCR-481 commitment to fall below the contract goal, the Contractor shall take all necessary reasonable steps to replace the DBE with another certified DBE Subcontractor or submit information to satisfy the Mississippi Department of Transportation that adequate good faith efforts have been made to replace the DBE. The replacement DBE must be a DBE who was on the Department's list of "Certified DBE Contractors" when the job was awarded, and who is still active. All DBE replacements must be approved by the Department.

Under no circumstances shall the Prime or any Subcontractor perform the DBE's work (as shown on the OCR-481) without prior written approval from the Department. See "Sanctions" at the end of this document for penalties for performing DBE's work.

When a Contractor proposes to substitute/replace/terminate a DBE that was originally named on the OCR-481, the Contractor must obtain a release, in writing, from the named DBE explaining why the DBE Subcontractor cannot perform the work. A copy of the original DBE's release must be attached to the Contractor's written request to substitute/replace/terminate along with appropriate Subcontract Forms for the substitute/replacement/terminated Subcontractor, all of which must be submitted to the DBE Coordinator and approved, in advance, by MDOT.

GOOD FAITH EFFORTS

To demonstrate good faith efforts to replace any DBE that is unable to perform successfully, the Contractor must document steps taken to subcontract with another certified DBE Contractor. Such documentation shall include no less than the following:

(a) Proof of written notification to certified DBE Contractors by certified mail that their interest is solicited in subcontracting the work defaulted by the previous DBE or in subcontracting other items of work in the contract.

(b) Efforts to negotiate with certified DBE Contractors for specific items shall include as a minimum:

(1) The name, address, and telephone number of each DBE contacted;

(2) A description of the information provided about the plans and specifications for those portions of the work to be subcontracted; and

(3) A statement of why agreements were not reached.

(c) For each DBE contacted that was rejected as unqualified, the reasons for such conclusion.

(d) Efforts made to assist each DBE that needed assistance in obtaining bonding or insurance required by the Contractor.

Failure of the Contractor to demonstrate good faith efforts to replace a DBE Subcontractor that cannot perform as intended with another DBE Subcontractor, when required, shall be a breach of contract and may be just cause to be disqualified from further bidding for a period of up to 12 months after notification by certified mail.

PARTICIPATION / DBE CREDIT

Participation shall be counted toward meeting the goal in this contract as follows:

(1) If the Prime Contractor is a certified DBE firm, only the value of the work actually performed by the DBE Prime can be counted towards the project goal, along with any work subcontracted to a certified DBE firm.

(2) If the Contractor is not a DBE, the work subcontracted to a certified DBE Contractor will be counted toward the goal.

(3) The Contractor may count toward the goal a portion of the total dollar value of a contract with a joint venture eligible under the standards of this provision equal to the percentage of the DBE partner in the joint venture.

(4) Expenditures to DBEs that perform a commercially useful function may be counted toward the goal. A business is considered to perform a commercially useful function when it is responsible for the execution of a distinct element of the work and carries out its responsibilities by actually performing, managing, and supervising the work involved.

(5) The Contractor may count 100% of the expenditures for materials and supplies obtained from certified DBE suppliers and manufacturers that produce goods from raw materials or substantially alters them for resale provided the suppliers and manufacturers assume the actual and contractual responsibility for the provision of the materials and supplies. The Contractor may count 60 percent of the expenditures to suppliers that are not manufacturers, provided the supplier performs a commercially useful function in the supply process. Within 30 days after receipt of the materials, the Contractor shall furnish to the DBE Coordinator invoices from the certified supplier to verify the DBE goal.

(6) Any work that a certified DBE firm subcontracts or sub-subcontracts to a non-DBE firm will not count towards the DBE goal.

(7) Only the dollars actually paid to the DBE firm may be counted towards the DBE goal.

AWARD

Award of this contract to the low bidder will be contingent upon the following conditions:

(1) Concurrence from Federal Highway Administration, when applicable.

(2) Bidder must submit to the Contract Administration Division for approval, Form OCR-481 (DBE Commitment) no later than the 10th day after opening of the bids, or submit information with the bid proposal to satisfy the Department and that adequate good faith efforts have been made to meet the contract goal.

(3) Bidder must submit **with the bid proposal** a list of all firms that submitted quotes for material supplies or items to be subcontracted. This information must be submitted on form OCR-485 in the back of the contract proposal.

Prior to the start of any work, the bidder must notify the Project Engineer, in writing, of the name of the designated "DBE Liaison Officer" for this project. This notification must be posted on the bulletin board at the project site.

DEFAULT

The contract goal established by MDOT in this proposal must be met to fulfill the terms of the contract. The Contractor may list DBE Subcontractors and items that exceed MDOT's contract goal, but should unforeseen problems arise that would prevent a DBE from completing its total commitment percentage, the Contractor will meet the terms of the contract as long as it meets or exceeds MDOT's Contract Goal. For additional information, refer to "Replacement" section of this Notice.

DBE REPORTS

(1) OCR-481: Refer to "CONTRACT GOAL" section of this Notice to Bidders for information regarding this form.

(2) OCR-482: At the conclusion of the project the Contractor will submit to the Project Engineer for verification of quantities and further handling Form OCR-482 whereby the Contractor certifies to the amounts of payments made to each Contractor / Supplier. The Project Engineer shall submit the completed Form OCR-482 to the DBE Coordinator (Office of Civil Rights). Final acceptance of the project is dependent upon Contract Administration Division's receipt of completed Form OCR-482 which they will receive from the Office of Civil Rights.

(3) OCR-483: The Project Engineer/Inspector will complete Form OCR-483, the Commercially Useful Function (CUF) Performance Report, in accordance with MDOT S.O.P. No. OCR-03-09-01-483. Evaluations reported on this form are used to determine whether or not the DBE firm is performing a CUF. The Prime Contractor should take corrective action when the report contains any negative evaluations. DBE credit may be disallowed and/or other sanctions imposed if it is determined the DBE firm is not performing a CUF. This form should also be completed and returned to the DBE Coordinator (Office of Civil Rights).

(4) OCR-484: Each month, the Contractor will submit to the Project Engineer OCR-484 certifying payments to all Subcontractors.

(5) OCR-485: The bidder must submit **with the bid proposal** a list of all firms that submitted quotes for material supplies or items to be subcontracted.

(6) OCR-487: Only used by Prime Contractors that are certified DBE firms. This form is used in determining the exact percentage of DBE credit for the specified project. It should be returned to MDOT with the OCR-481 form, or can also be returned with the Permission to Subcontract Forms (CAD-720 or CAD-725).

SANCTIONS

The Department has the option to enforce any of the following penalties for failure of the Prime Contractor to fulfill the DBE goal as stated on the OCR-481 form or any violations of the DBE program guidelines:

(1) Disallow credit towards the DBE goal

(2) Withhold progress estimate payments

(3) Deduct from the final estimate an amount equal to the unmet portion of the DBE goal

(4) Recover an amount equal to the unmet contract goal

(5) Debar the Contractor involved from bidding on Mississippi Department of Transportation projects.

(6) Deduct from the Contractor's final estimate all or any combination of the following.

Offense	Percentage of the monetary amount disallowed from (1) above	Lump Sum
# 1	10%	$ 5,000 or both
# 2	20%	$ 10,000 or both
# 3	40%	$ 20,000 & debarment

MISSISSIPPI DEPARTMENT OF TRANSPORTATION

SECTION 904 - NOTICE TO BIDDERS NO. 777 **CODE: (IS)**

DATE: 04/13/2006

SUBJECT: On-The-Job Training Program

Payment for training hours will be handled as outlined in Special Provision 906-6. A pay item for trainees will not be included in individual construction projects. Payment for training individuals will be processed in accordance with the conditions in MDOT's ON-THE-JOB TRAINING PROGRAM (Special Provision 906-6).

On Federal-Aid projects, failure on the part of the Contractor to carryout the terms of the Alternate Training Special Provision (Special Provision 906-6) will be considered grounds to preclude the Contractor from participating in the Alternate On-The-Job Training Program. In the event the Department is required to preclude the Contractor from participating in the program, the Contractor will be required to adhere to the requirements of the Training Special Provision (Special Provision 906-3), for which purpose the special provision is also made a part of this proposal.

MISSISSIPPI DEPARTMENT OF TRANSPORTATION

SECTION 904 - NOTICE TO BIDDERS NO. 882 **CODE: (IS)**

DATE: 04/06/2006

SUBJECT: DBE Participation and Payment

Bidders are hereby advised that the participation of a DBE Firm can not be counted towards the Prime Contractor's DBE goal until the amount being counted towards the goal has been paid to the DBE.

Form OCR-482 has been developed to comply with this requirement. Bidders are hereby advised that at the end of the job, the Prime Contractor will submit this form to the Project Engineer before the final estimate is paid and the project is closed out. This form certifies payments to all DBE Subcontractors over the life of the contract.

Form OCR-484 has also been developed to comply with this requirement. Bidders are hereby advised that each month, the Prime Contractors will submit this form to the Project Engineer no later than the 20th of each month. This form certifies payments to all Subcontractors and shows all firms even if the Prime Contractor has paid no monies to the firm during that estimate period (negative report). The Project Engineer will attach this form to the monthly estimate before forwarding the estimate to the Contract Administration Division for processing.

Forms OCR-482 and OCR-484 can be obtained from the Office of Civil Rights Division, MDOT Administration Building, 401 North West Street, Jackson, MS, or at www.gomdot.com under the *Business Section, DBE Information, Applications and Forms for the DBE Program, Monthly Certification Of Payment To Subcontractors (OCR-484)(MDOT).*

MISSISSIPPI DEPARTMENT OF TRANSPORTATION

SECTION 904 - NOTICE TO BIDDERS NO. 883 **CODE: (IS)**

DATE: **04/28/2006**

SUBJECT: **Payroll Requirements**

Bidders are hereby advised that the Contractor and Subcontractor(s) are required to submit payroll information to the Project Engineers on a weekly basis.

On Federal-Aid Projects, CAD-880, CAD-881 and certified payroll submissions are required each week the Contractor or a Subcontractor performs work on the project. This is addressed in Section V, page 6 of Form FHWA-1273.

On State-Funded Projects, CAD-880 is required each week the Contractor or a Subcontractor performs work on the project.

When no work is performed on either Federal-Aid and State-Funded Projects, the Contractor should only submit CAD-880 showing no work activities.

The Contractor shall make all efforts necessary to submit this information to the Project Engineer in a timely manner. The Engineer will have the authority to suspend the work wholly or in part and to withhold payments because of the Contractor's failure to submit the required information. Submission of forms and payrolls shall be current through the first full week of the month for the estimate period in order for the Project Engineer to process an estimate.

Bidders are advised to review the requirements regarding payroll submissions in Section 110 of the Standard Specifications.

MISSISSIPPI DEPARTMENT OF TRANSPORTATION

SECTION 904 - NOTICE TO BIDDERS NO. 935 **CODE: (IS)**

DATE: 06/22/2006

SUBJECT: ERRATA AND MODIFICATIONS TO THE 2004 STANDARD SPECIFICATIONS

Page	Subsection	Change
101	201.01	In the second sentence of the first paragraph, change “salvable” to “salvageable”.
107	202.04	In the fourth sentence of the fourth paragraph, change “yard” to “feet”.
107	202.05	In the list of units measurements for 202-B, add “square foot”.
132	211.03.4	In the second sentence of the second paragraph, change “planted” to “plated”.
200	307.03.7	In the fourth sentence of the second paragraph, change “lime-fly ash” to “treated”.
236	401.01	Change the header from “Section 403” to “Section 401”.
242	401.02.3.2	In the first sentence of the third full paragraph, add “1/8” in the blank before the inch mark.
250	401.02.6.3	In the second sentence of the first paragraph on page 250, change “rutting over ” ” to “rutting over 1/8" ”.
253	401.02.6.4.2	In the paragraph preceding the table, change “91.0” to “89.0”.
259	401.03.1.4	In the first paragraph, change “92.0 percent” to “the specified percentage (92.0 or 93.0)”.
269	403.03.2	In the table at the top of page 269, change the PI requirement from “ = ” to “ ≤ ”.
278	404.04	In the second sentence, change the subsection from “401.04” to “403.04”.

283	409.02.2	Change "PG 64-22" to "PG 67-22".
294	413.02	In the first sentence of the second paragraph, change "707.02.1.3" to "Subsection 707.02.1.3".
340	511.04	In the second sentence of the second paragraph, change "412" to "512".
349	601.03.3	In the first sentence, change "804.03.2" to "804.03.5".
355	603.02	Change the subsection reference for Joint mortar from "707.03" to "714.11".
369	604.04	In the first sentence, change "601.04" to "Subsection 601.04".
427	619.04	Delete the second paragraph.
442	625.04	In the third paragraph, change "626.04" to "Subsection 626.04".
444	626.03.1.2	Delete the third sentence of the first paragraph.
464	631.02	Change the subsection reference for Water from "714.01.0" to "714.01.1".
570	682.03	Change the subsection number from "682-03" to "682.03".
575	683.10.4	Change the subsection number from "683.10.4" to "683.04".
575	683.10.5	Change the subsection number from "683.10.5" to "683.05".
596	701.02	In the table under the column titled "Cementations material required", change Class F, FA" to "Class F FA,".
603	702.11	In the first sentence, change "702.12" to "Subsection 702.12".
612	703.04.2	In the fifth paragraph, delete "Subsection 703.11 and".
616	703.07.2	In the Percentage By Weight Passing Square Mesh Sieves table, change the No. 10 requirement for Class 7 material from "30 - 10" to "30 - 100".
618	703.13.1	In the first sentence of the first paragraph, change "703.09" to "703.06".
618	703.13.2	In the first sentence, change "703.09" to "703.06".

671	712.06.2.2	In the first sentence, change "712.05.1" to "Subsection 712.05.1".
689	714.11.2	In the first sentence, change "412" to "512".
741	720.05.2.2	In the last sentence of this subsection, change "720.05.2.1" to "Subsection 720.05.2.1".
827	803.03.2.3.7.5.2	In the first sentence of the second paragraph, change "803.03.5.4" to "803.03.2.3.4".
833	803.03.2.6	In the first sentence, change "803.03.7" to "803.03.2.5".
854	804.02.11	In the last sentence of the first paragraph, change "automatically" to "automatic".
859	804.02.13.1.3	In the last sentence, change Subsection "804.02.12.1" to "804.02.12".
879	804.03.19.3.2	In the first sentence of the third paragraph, change "listed on of Approved" to "listed on the Approved".
879	804.03.19.3.2	In the last sentence of the last paragraph, change "804.03.19.3.1" to "Subsection 804.03.19.3.1".
962	814.02.3	In the first sentence, change "710.03" to "Subsection 710.03".
976	820.03.2.1	In the first sentence, change "803.02.6" to "803.03.1.7".
976	820.03.2.2	In the first sentence, change "803.03.9.6" to "803.03.1.9.2".
985	Index	Change the subsection reference for Petroleum Asphalt Cement from "702.5" to "702.05".
985	Index	Change the subsection reference for the Definition of Asphaltic Cement or Petroleum Asphalt from "700.2" to "700.02".
985	Index	Change the subsection reference for Automatic Batchers from "501.03.2.4" to "804.02.10.4".
986	Index	Delete "501.03.2" as a subsection reference for Batching Plant & Equipment.
988	Index	Change the subsection reference for the Central Mixed Concrete from "501.03.3.2" to "804.02.11".

988	Index	Change the subsection reference for the Concrete Batching Plant & Equipment from "501.03.2" to "804.02.11".
999	Index	Delete "501.03.3.3" as a subsection reference for Truck Mixers.
1001	Index	Change the subsection reference for Edge Drain Pipes from "605.3.5" to "605.03.5".
1002	Index	Change the subsection reference for Metal Posts from "713.05.2" to "712.05.2".
1007	Index	Change the subsection reference for Coarse Aggregate of Cement Concrete Table from "703.3" to "703.03".
1007	Index	Change the subsection reference for Composite Gradation for Mechanically Stabilized Courses Table from "703.8" to "703.08".
1009	Index	Delete "501.03.3.3" as a subsection reference for Truck Mixers and Truck Agitators.
1010	Index	Delete reference to "Working Day, Definition of".

MISSISSIPPI DEPARTMENT OF TRANSPORTATION

SECTION 904 - NOTICE TO BIDDERS NO. 1177 **CODE: (SP)**

DATE: **08/31/2006**

SUBJECT: **Contract Time**

PROJECT: **ER-0003-01(132) / 104634306 & 307 -- Hancock & Harrison County**

The calendar date for completion of work to be performed by the Contractor on this project shall be **October 20, 2006,** which date or extended date as provided in Subsection 108.06 shall be the end of contract time. The Notice to Proceed / Beginning of Contract Time will not be a separate issuance and will be simultaneous with the execution of the contract.

A progress schedule as referenced to in Subsection 108.03 will not be required for this contract.

MISSISSIPPI DEPARTMENT OF TRANSPORTATION

SECTION 904 - NOTICE TO BIDDERS NO. 1179 **CODE: (SP)**

DATE: **08/31/2006**

SUBJECT: **Proposal Documents**

PROJECT: **ER-0003-01(132) / 104634306 & 307 -- Hancock & Harrison Counties**

Bidders are hereby advised that **all** documents necessary to execute this contract be signed and included in the bid proposal, including a bid bond, Section 902, Section 903, Certification of Insurance, OCR-481 & OCR-485.

MISSISSIPPI DEPARTMENT OF TRANSPORTATION

SECTION 904 – NOTICE TO BIDDERS NO. 1180 **CODE: (SP)**

DATE: **09/01/2006**

SUBJECT: **Scope Of Work**

PROJECT: **ER-0003-01(132) / 104634306 & 307 -- Hancock & Harrison County**

The contract documents do not include an official set of construction plans but may reference some Special Design Drawings. All other references to plans in the specifications and Standard Specifications for Road and Bridge Construction are to mean the proposal documents.

Bidders are advised that the work required in the project is to driving timber piling & purchasing and delivering materials required to construct landing ramps and parking areas at Bay St. Louis and Henderson Point as follows:

1) Phase 1 of the project is to deliver and drive timber piling in the Bay at both locations as per attached drawing. This phase of the project shall be completed by October 20, 2006.

   Phase 2 of the project is to purchase and deliver to a designated location on the project site as directed by the Engineer, materials necessary to construct the landing ramps and parking areas. Approximately half of the quantities of these materials shall be delivered to each site. The initial phase of this project shall be completed by September 20, 2006. If any additional materials are needed, they shall be delivered to the project site within five (5) working days from the time of notification by the Engineer. Should the Contractor failure to delivery the materials to the project site within the specified time, the Contractor will be charged a penalty of **$4,000.00** per day until the material is delivered.

2) Sheet piling shall be PZ32, Grade 50 or better with a minimum section modulus of 38.3 in^3 per foot of wall. The sheet piling shall be 40 feet in length .

3) All timber piling shall be 40 feet in length by 12 inches in diameter. The Contractor shall deliver and drive 36 piling (bid sheet reference no. 80) and deliver only 50 piling (bid sheet reference no. 85).

4) Treated timber (bid sheet reference no. 75) shall consist of seven (7) timbers measuring 24’ x 12” x 6”. The Contractor will be required to deliver galvanized bolts, washers, nuts and any other hardware necessary for the construction of the treated timbers to the timber piling.

5) Any reference in the contract documents to Henderson Point it shall be understood to mean Pass Christian.

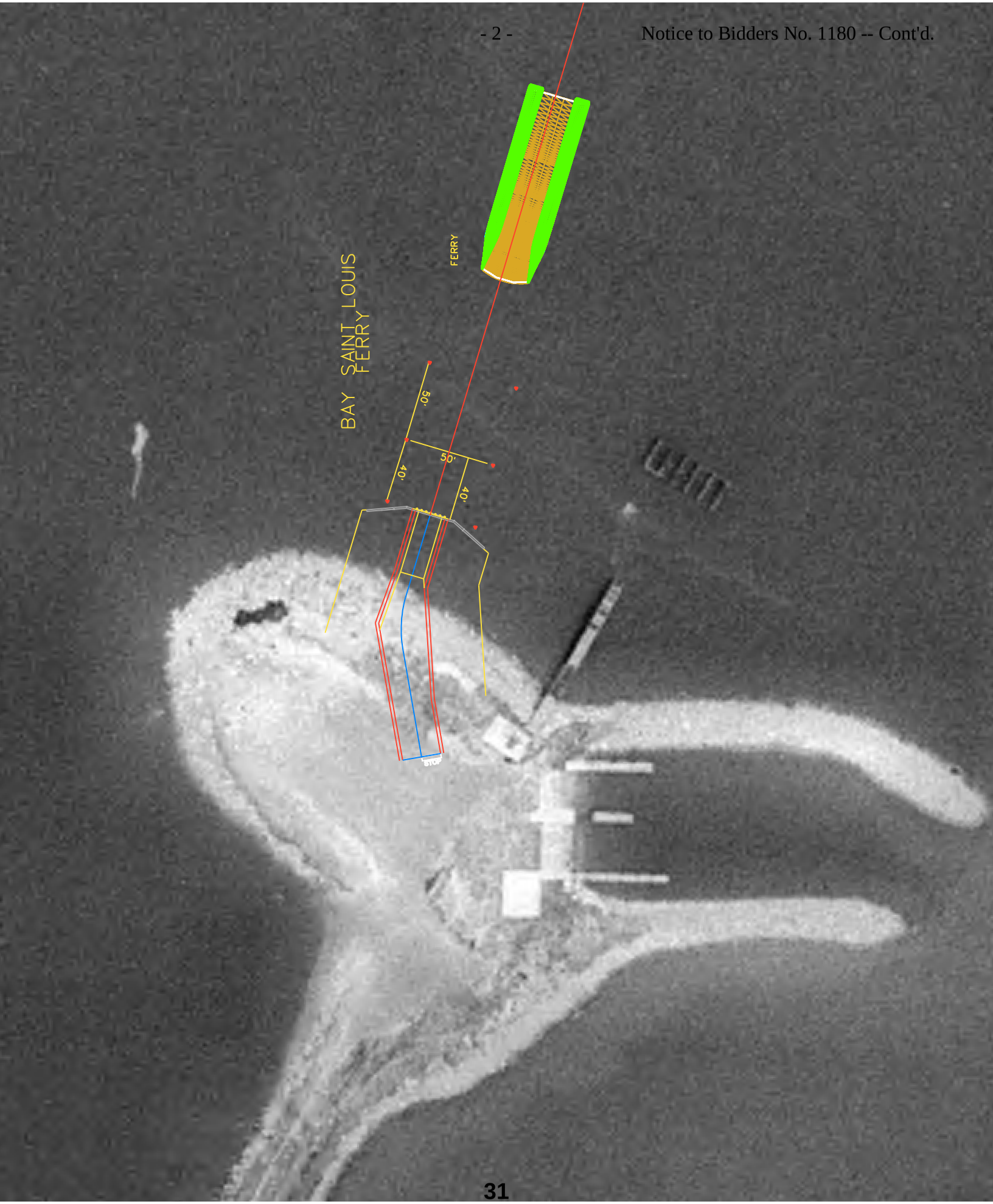
BAY SAINT LOUIS
FERRY
FERRY
50'
40'
50'
40'

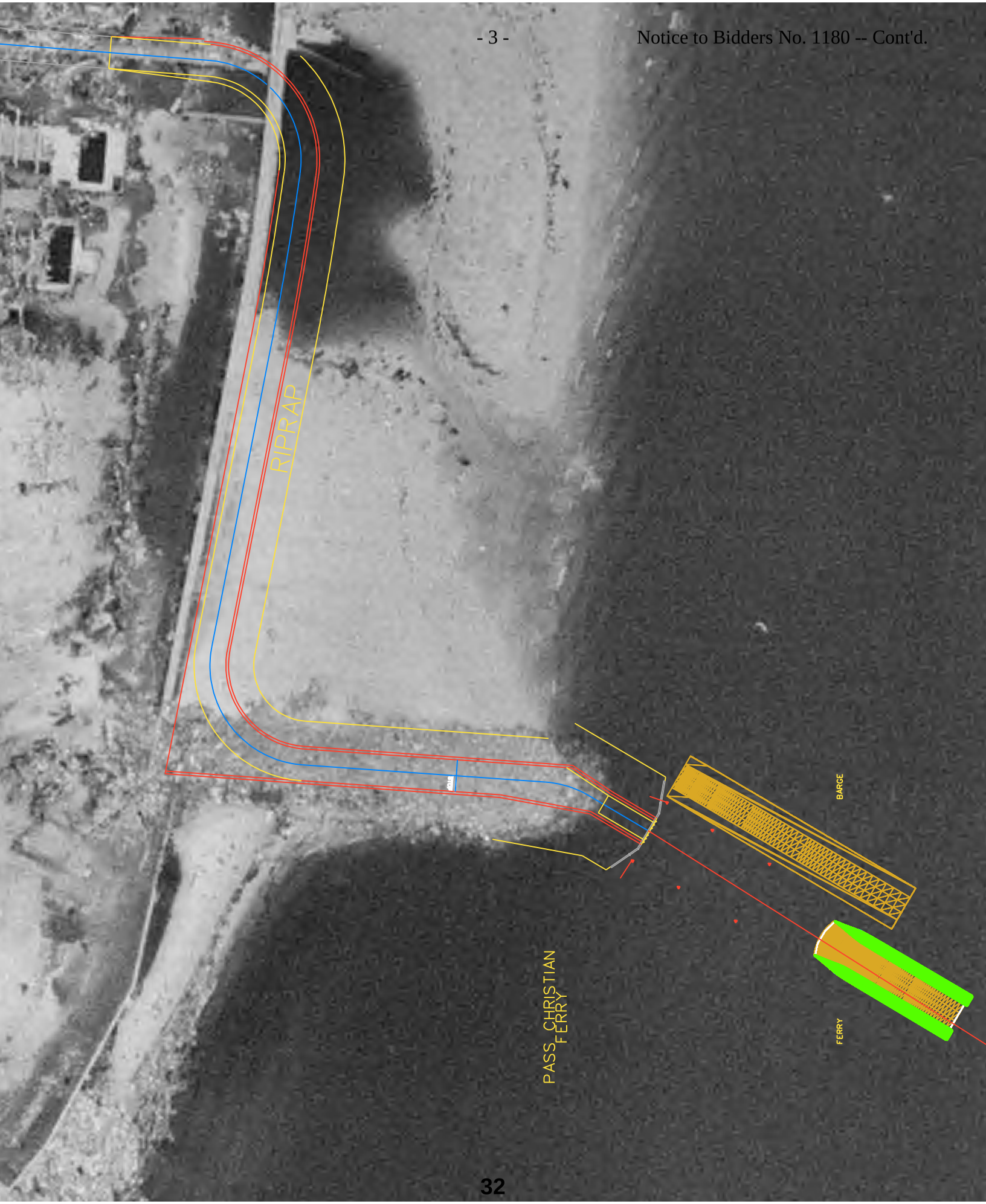
RIPRAP
PASS CHRISTIAN
FERRY
BARGE
FERRY

Notice to Bidders No. 1180 -- Cont'd.

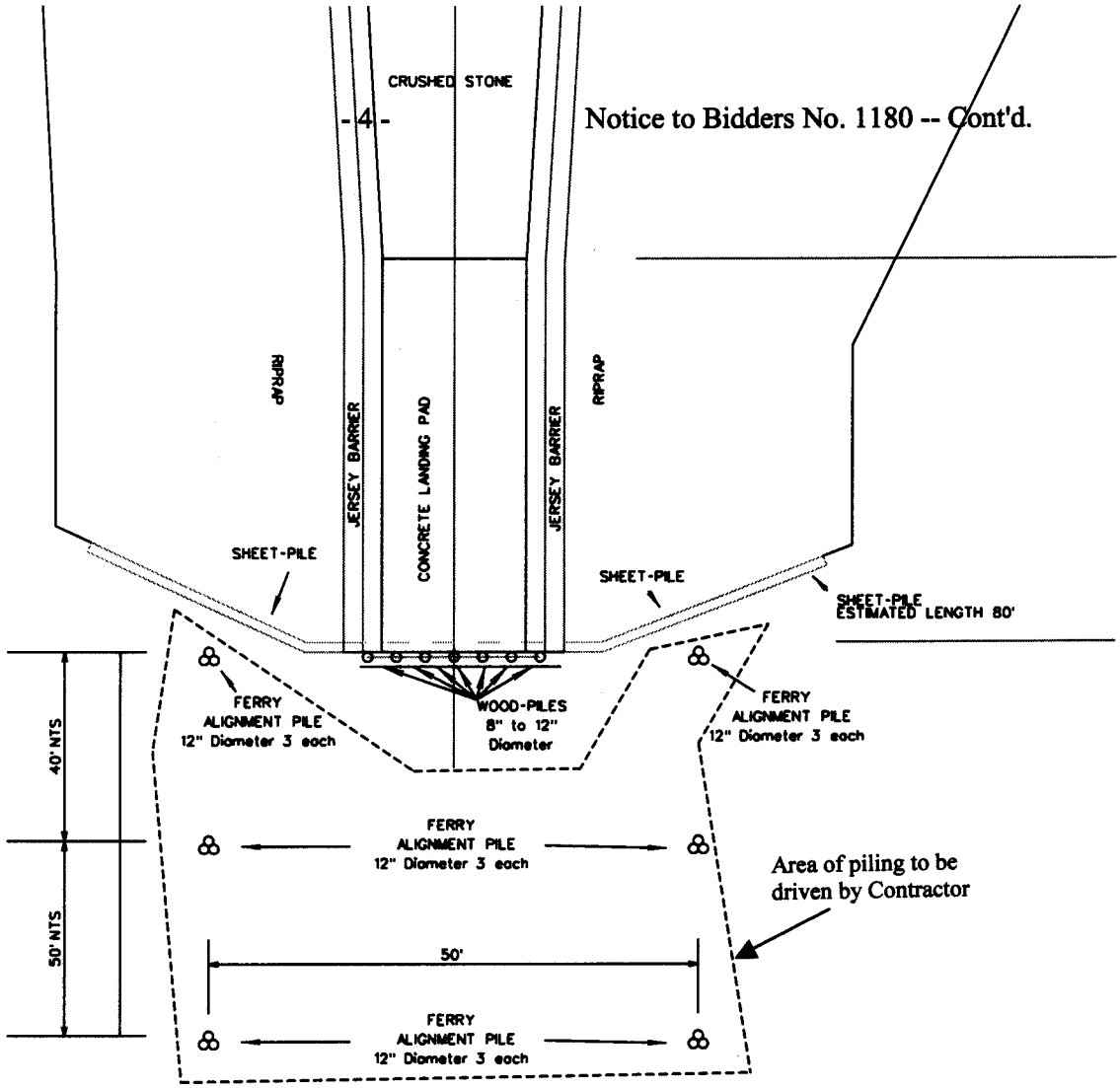

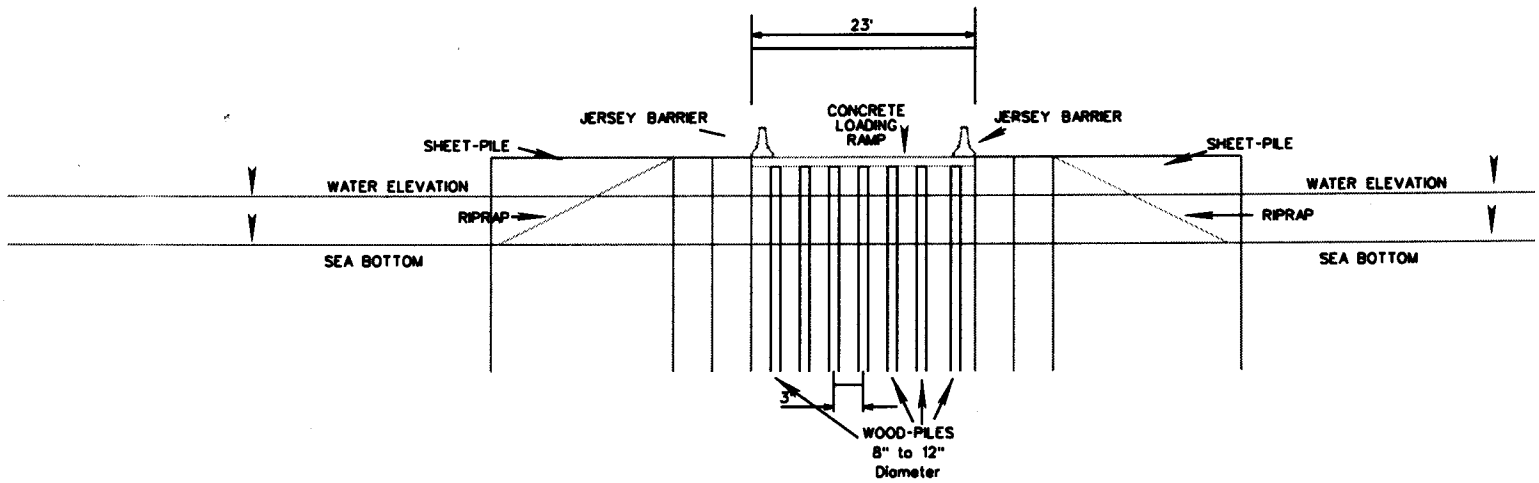

MISSISSIPPI DEPARTMENT OF TRANSPORTATION

SECTION 904 – NOTICE TO BIDDERS NO. 1183 **CODE: (SP)**

DATE: **09/01/2006**

SUBJECT: **Subcontracting**

PROJECT: **ER-0003-01(132) / 104634306 & 307 -- Hancock & Harrison County**

Bidders are advised that Subsection 108.01.1 on page 72 of the Standard Specifications requires the Contractor to perform no less that 40% of the total value of the work. This requirement will **NOT** apply for this contract.

SUPPLEMENT TO FORM FHWA-1273

The following MINIMUM HOURLY WAGE RATES have been predetermined by the Secretary of Labor in Wage Determination Decision No. MS20030027 dated June 13, 2003.

AREA 6-A COUNTIES :

HANCOCK, HARRISON, AND JACKSON

PAYROLL CODE	CLASSIFICATION	MIN. HOURLY
100	Air Tool Operator (Jack Hammer/Air Comp.)	$6.25
105	Asphalt Raker	6.25
108	Mason Tender (Cement Mason Helper)	7.50
110	Carpenter	8.67
120	Cement Mason (Finisher)	8.33
130	Electrician	12.00
131	Mechanic (Heavy Equipment)	9.68
135	Oiler-Greaser	6.55
140	Form Setter	7.00
145	Grade Checker (Asphalt Crew)	7.35
150	Ironworker, Reinforcing (Tie Steel)	12.36
155	Ironworker, Structural	13.89
160	Laborer, Unskilled	5.77
165	Pipelayer	7.45
175	Painter (Structural Steel)	5.43
180	Piledriverman	7.50
185	Truck Driver (All Types)	6.14
190	Joint Filler	5.15
195	Joint Setter	5.15
197	Welder	10.14
	POWER EQUIPMENT OPERATORS	
205	Aggregate Spreader Operator	7.31
212	Asphalt Broom (Sweeper) Operator	5.63
214	Asphalt Paving Machine/Spreader Operator	7.50
215	Asphalt Distributor Operator	6.40
216	Asphalt Plant Operator	6.31
220	Backhoe (Shovel) Operator	7.67
225	Bulldozer Operator	8.40
235	Concrete Finishing/Curing Machine Operator	8.45
240	Concrete Paving Machine Operator (Spreader)	8.97
250	Concrete Saw Operator	8.56
255	Concrete Breaker & Hydro-Hammer Operator	8.24
270	Loader (All Types)	7.75
275	Milling Machine Operator	10.75
280	Mixer Operator (All Types)	8.12
285	Motor Patrol (Grader) Operator	9.10
290	Mulcher Machine Operator	5.33
295	Earth Auger Operator	8.50
300	Piledriver Machine Operator	8.13
305	Roller Operator (Self-Propelled)	6.26
310	Scraper Operator (All Types)	6.83
315	Striping Machine Operator	7.63
320	Tractor Operator (Track Type)	6.83
325	Tractor Operator (Wheel Type)	5.96
330	Trenching Machine Operator	8.88
350	Crusher Feeder Machine Operator	5.50
360	Crane (Dragline) Operator	9.47
365	Guardrail Post Driver	8.57

Authorized Payroll Code may be used in lieu of classification titles on weekly payrolls submitted to this Department. Codes or classification titles not conforming to those listed will not be acceptable.

SUPPLEMENT TO FORM FHWA-1273

DATE: 6/15/94

SUBJECT: Final Certificate and Contract Provisions for Subcontracts

All subcontracts shall be in writing and contain all pertinent provisions and requirements of the prime contract.

Each "Request for Permission to Subcontract" (Mississippi Department of Transportation Form CAD-720) shall include a copy of subcontract for review by the Mississippi Department of Transportation. The federal contract provisions may be omitted from the subcontract copy submitted for review provided the Contractor certifies that the provisions will be physically incorporated into the agreement furnished to the Subcontractor.

In lieu of submitting a copy of the subcontract for review, the Contractor may certify that the subcontract agreement is in writing and that it contains all the requirements and pertinent provisions of the prime contract.

Each Subcontractor will be required to provide a copy of the subcontract agreement for contract compliance reviews, along with physical evidence (copy of FHWA-1273) that requirements and pertinent provisions have been provided for review and adherence.

REQUIRED CONTRACT PROVISIONS
FEDERAL-AID CONSTRUCTION CONTRACTS

		Page
I.	General	1
II.	Nondiscrimination	1
III.	Nonsegregated Facilities	3
IV.	Payment of Predetermined Minimum Wage	3
V.	Statements and Payrolls	6
VI.	Record of Materials, Supplies, and Labor	7
VII.	Subletting or Assigning the Contract	7
VIII.	Safety: Accident Prevention	7
IX.	False Statements Concerning Highway Projects	8
X.	Implementation of Clean Air Act and Federal Water Pollution Control Act	8
XI.	Certification Regarding Debarment, Suspension, Ineligibility, and Voluntary Exclusion	8
XII.	Certification Regarding Use of Contract Funds for Lobbying	10

ATTACHMENTS

A. Employment Preference for Appalachian Contracts (included in Appalachian contracts only)

I. GENERAL

1. These contract provisions shall apply to all work performed on the contract by the contractor's own organization and with the assistance of workers under the contractor's immediate superintendence and to all work performed on the contract by piecework, station work, or by subcontract.

2. Except as otherwise provided for in each section, the contractor shall insert in each subcontract all of the stipulations contained in these Required Contract Provisions, and further require their inclusion in any lower tier subcontract or purchase order that may in turn be made. The Required Contract Provisions shall not be incorporated by reference in any case. The prime contractor shall be responsible for compliance by any subcontractor or lower tier subcontractor with these Required Contract Provisions.

3. A breach of any of the stipulations contained in these Required Contract Provisions shall be sufficient grounds for termination of the contract.

4. A breach of the following clauses of the Required Contract Provisions may also be grounds for debarment as provided in 29 CFR 5.12:

Section I, paragraph 2;
Section IV, paragraphs 1, 2, 3, 4, and 7;
Section V, paragraphs 1 and 2a through 2g.

5. Disputes arising out of the labor standards provisions of Section IV (except paragraph 5) and Section V of these Required Contract Provisions shall not be subject to the general disputes clause of this contract. Such disputes shall be resolved in accordance with the procedures of the U.S. Department of Labor (DOL) as set forth in 29 CFR 5, 6, and 7. Disputes within the meaning of this clause include disputes between the contractor (or any of its subcontractors) and the contracting agency, the DOL, or the contractor's employees or their representatives.

6. **Selection of Labor:** During the performance of this contract, the contractor shall not:

a. discriminate against labor from any other State, possession, or territory of the United States (except for employment preference for Appalachian contracts, when applicable, as specified in Attachment A), or

b. employ convict labor for any purpose within the limits of the project unless it is labor performed by convicts who are on parole, supervised release, or probation.

II. NONDISCRIMINATION

(Applicable to all Federal-aid construction contracts and to all related subcontracts of $10,000 or more.)

1. **Equal Employment Opportunity:** Equal employment opportunity (EEO) requirements not to discriminate and to take affirmative action to assure equal opportunity as set forth under laws, executive orders, rules, regulations (28 CFR 35, 29 CFR 1630 and 41 CFR 60) and orders of the Secretary of Labor as modified by the provisions prescribed herein, and imposed pursuant to 23 U.S.C. 140 shall constitute the EEO and specific affirmative action standards for the contractor's project activities under this contract. The Equal Opportunity Construction Contract Specifications set forth under 41 CFR 60-4.3 and the provisions of the American Disabilities Act of 1990 (42 U.S.C. 12101 et seq.) set forth under 28 CFR 35 and 29 CFR 1630 are incorporated by reference in this contract. In the execution of this contract, the contractor agrees to comply with the following minimum specific requirement activities of EEO:

a. The contractor will work with the State highway agency (SHA) and the Federal Government in carrying out EEO obligations and in their review of his/her activities under the contract.

b. The contractor will accept as his operating policy the following statement:

"It is the policy of this Company to assure that applicants are employed, and that employees are treated during employment, without regard to their race, religion, sex, color, national origin, age or disability. Such action shall include: employment, upgrading, demotion, or transfer; recruitment or recruitment advertising; layoff or termination; rates of pay or other forms of compensation; and selection for training, including apprenticeship, preapprenticeship, and/or on-the-job training."

2. **EEO Officer:** The contractor will designate and make known to the SHA contracting officers an EEO Officer who will have the responsibility for and must be capable of effectively administering and promoting an active contractor program of EEO and who must be assigned adequate authority and responsibility to do so.

3. **Dissemination of Policy:** All members of the contractor's staff who are authorized to hire, supervise, promote, and discharge employees, or who recommend such action, or who are substantially involved in such action, will be made fully cognizant

of, and will implement, the contractor's EEO policy and contractual responsibilities to provide EEO in each grade and classification of employment. To ensure that the above agreement will be met, the following actions will be taken as a minimum:

a. Periodic meetings of supervisory and personnel office employees will be conducted before the start of work and then not less often than once every six months, at which time the contractor's EEO policy and its implementation will be reviewed and explained. The meetings will be conducted by the EEO Officer.

b. All new supervisory or personnel office employees will be given a thorough indoctrination by the EEO Officer, covering all major aspects of the contractor's EEO obligations within thirty days following their reporting for duty with the contractor.

c. All personnel who are engaged in direct recruitment for the project will be instructed by the EEO Officer in the contractor's procedures for locating and hiring minority group employees.

d. Notices and posters setting forth the contractor's EEO policy will be placed in areas readily accessible to employees, applicants for employment and potential employees.

e. The contractor's EEO policy and the procedures to implement such policy will be brought to the attention of employees by means of meetings, employee handbooks, or other appropriate means.

4. **Recruitment:** When advertising for employees, the contractor will include in all advertisements for employees the notation: "An Equal Opportunity Employer." All such advertisements will be placed in publications having a large circulation among minority groups in the area from which the project work force would normally be derived.

a. The contractor will, unless precluded by a valid bargaining agreement, conduct systematic and direct recruitment through public and private employee referral sources likely to yield qualified minority group applicants. To meet this requirement, the contractor will identify sources of potential minority group employees, and establish with such identified sources procedures whereby minority group applicants may be referred to the contractor for employment consideration.

b. In the event the contractor has a valid bargaining agreement providing for exclusive hiring hall referrals, he is expected to observe the provisions of that agreement to the extent that the system permits the contractor's compliance with EEO contract provisions. (The DOL has held that where implementation of such agreements have the effect of discriminating against minorities or women, or obligates the contractor to do the same, such implementation violates Executive Order 11246, as amended.)

c. The contractor will encourage his present employees to refer minority group applicants for employment. Information and procedures with regard to referring minority group applicants will be discussed with employees.

5. **Personnel Actions:** Wages, working conditions, and employee benefits shall be established and administered, and personnel actions of every type, including hiring, upgrading, promotion, transfer, demotion, layoff, and termination, shall be taken without regard to race, color, religion, sex, national origin, age or disability. The following procedures shall be followed:

a. The contractor will conduct periodic inspections of project sites to insure that working conditions and employee facilities do not indicate discriminatory treatment of project site personnel.

b. The contractor will periodically evaluate the spread of wages paid within each classification to determine any evidence of discriminatory wage practices.

c. The contractor will periodically review selected personnel actions in depth to determine whether there is evidence of discrimination. Where evidence is found, the contractor will promptly takecorrective action. If the review indicates that the discrimination may extend beyond the actions reviewed, such corrective action shall include all affected persons.

d. The contractor will promptly investigate all complaints of alleged discrimination made to the contractor in connection with his obligations under this contract, will attempt to resolve such complaints, and will take appropriate corrective action within a reasonable time. If the investigation indicates that the discrimination may affect persons other than the complainant, such corrective action shall include such other persons. Upon completion of each investigation, the contractor will inform every complainant of all of his avenues of appeal.

6. **Training and Promotion:**

a. The contractor will assist in locating, qualifying, and increasing the skills of minority group and women employees, and applicants for employment.

b. Consistent with the contractor's work force requirements and as permissible under Federal and State regulations, the contractor shall make full use of training programs, i.e., apprenticeship, and on-the-job training programs for the geographical area of contract performance. Where feasible, 25 percent of apprentices or trainees in each occupation shall be in their first year of apprenticeship or training. In the event a special provision for training is provided under this contract, this subparagraph will be superseded as indicated in the special provision.

c. The contractor will advise employees and applicants for employment of available training programs and entrance requirements for each.

d. The contractor will periodically review the training and promotion potential of minority group and women employees and will encourage eligible employees to apply for such training and promotion.

7. **Unions:** If the contractor relies in whole or in part upon unions as a source of employees, the contractor will use his/her best efforts to obtain the cooperation of such unions to increase opportunities for minority groups and women within the unions, and to effect referrals by such unions of minority and female employees. Actions by the contractor either directly or through a contractor's association acting as agent will include the procedures set forth below:

a. The contractor will use best efforts to develop, in cooperation with the unions, joint training programs aimed toward

qualifying more minority group members and women for membership in the unions and increasing the skills of minority group employees and women so that they may qualify for higher paying employment.

b. The contractor will use best efforts to incorporate an EEO clause into each union agreement to the end that such union will be contractually bound to refer applicants without regard to their race, color, religion, sex, national origin, age or disability.

c. The contractor is to obtain information as to the referral practices and policies of the labor union except that to the extent such information is within the exclusive possession of the labor union and such labor union refuses to furnish such information to the contractor, the contractor shall so certify to the SHA and shall set forth what efforts have been made to obtain such information.

d. In the event the union is unable to provide the contractor with a reasonable flow of minority and women referrals within thetime limit set forth in the collective bargaining agreement, the contractor will, through independent recruitment efforts, fill the employment vacancies without regard to race, color, religion, sex, national origin, age or disability; making full efforts to obtain qualified and/or qualifiable minority group persons and women. (The DOL has held that it shall be no excuse that the union with which the contractor has a collective bargaining agreement providing for exclusive referral failed to refer minority employees.) In the event the union referral practice prevents the contractor from meeting the obligations pursuant to Executive Order 11246, as amended, and these special provisions, such contractor shall immediately notify the SHA.

8. **Selection of Subcontractors, Procurement of Materials and Leasing of Equipment:** The contractor shall not discriminate on the grounds of race, color, religion, sex, national origin, age or disability in the selection and retention of subcontractors, including procurement of materials and leases of equipment.

a. The contractor shall notify all potential subcontractors and suppliers of his/her EEO obligations under this contract.

b. Disadvantaged business enterprises (DBE), as defined in 49 CFR 23, shall have equal opportunity to compete for and perform subcontracts which the contractor enters into pursuant to this contract. The contractor will use his best efforts to solicit bids from and to utilize DBE subcontractors or subcontractors with meaningful minority group and female representation among their employees. Contractors shall obtain lists of DBE construction firms from SHA personnel.

c. The contractor will use his best efforts to ensure subcontractor compliance with their EEO obligations.

9. **Records and Reports:** The contractor shall keep such records as necessary to document compliance with the EEO requirements. Such records shall be retained for a period of three years following completion of the contract work and shall be available at reasonable times and places for inspection by authorized representatives of the SHA and the FHWA.

a. The records kept by the contractor shall document the following:

(1) The number of minority and non-minority group members and women employed in each work classification on the project;

(2) The progress and efforts being made in cooperation with unions, when applicable, to increase employment opportunities for minorities and women;

(3) The progress and efforts being made in locating, hiring, training, qualifying, and upgrading minority and female employees; and

(4) The progress and efforts being made in securing the services of DBE subcontractors or subcontractors with meaningful minority and female representation among their employees.

b. The contractors will submit an annual report to the SHA each July for the duration of the project, indicating the number of minority, women, and non-minority group employees currently engaged in each work classification required by the contract work. This information is to be reported on Form FHWA-1391. If on-the-job training is being required by special provision, the contractor will be required to collect and report training data.

III. NONSEGREGATED FACILITIES

(Applicable to all Federal-aid construction contracts and to all related subcontracts of $10,000 or more.)

a. By submission of this bid, the execution of this contract or subcontract, or the consummation of this material supply agreement or purchase order, as appropriate, the bidder, Federal-aid construction contractor, subcontractor, material supplier, or vendor, as appropriate, certifies that the firm does not maintain or provide for its employees any segregated facilities at any of its establishments, and that the firm does not permit its employees to perform their services at any location, under its control, where segregated facilities are maintained. The firm agrees that a breach of this certification is a violation of the EEO provisions of this contract. The firm further certifies that no employee will be denied access to adequate facilities on the basis of sex or disability.

b. As used in this certification, the term "segregated facilities" means any waiting rooms, work areas, restrooms and washrooms, restaurants and other eating areas, timeclocks, locker rooms, and other storage or dressing areas, parking lots, drinking fountains, recreation or entertainment areas, transportation, and housing facilities provided for employees which are segregated by explicit directive, or are, in fact, segregated on the basis of race, color, religion, national origin, age or disability, because of habit, local custom, or otherwise. The only exception will be for the disabled when the demands for accessibility override (e.g. disabled parking).

c. The contractor agrees that it has obtained or will obtain identical certification from proposed subcontractors or material suppliers prior to award of subcontracts or consummation of material supply agreements of $10,000 or more and that it will retain such certifications in its files.

IV. PAYMENT OF PREDETERMINED MINIMUM WAGE

(Applicable to all Federal-aid construction contracts exceeding $2,000 and to all related subcontracts, except for projects located on roadways classified as local roads or rural minor collectors, which are exempt.)

1. **General:**

a. All mechanics and laborers employed or working upon the site of the work will be paid unconditionally and not less often than once a week and without subsequent deduction or rebate on any account [except such payroll deductions as are permitted by regulations (29 CFR 3) issued by the Secretary of Labor under the Copeland Act (40 U.S.C. 276c)] the full amounts of wages and bona fide fringe benefits (or cash equivalents thereof) due at time of payment. The payment shall be computed at wage rates not less than those contained in the wage determination of the Secretary of Labor (hereinafter "the wage determination") which is attached hereto and made a part hereof, regardless of any contractual relationship which may be alleged to exist between the contractor or its subcontractors and such laborers and mechanics. The wage determination (including any additional classifications and wage rates conformed under paragraph 2 of this Section IV and the DOL poster (WH-1321) or Form FHWA-1495) shall be posted at all times by the contractor and its subcontractors at the site of the work in a prominent and accessible place where it can be easily seen by the workers. For the purpose of this Section, contributions made or costs reasonably anticipated for bona fide fringe benefits under Section 1(b)(2) of the Davis-Bacon Act (40 U.S.C. 276a) on behalf of laborers or mechanics are considered wages paid to such laborers or mechanics, subject to the provisions of Section IV, paragraph 3b, hereof. Also, for the purpose of this Section, regular contributions made or costs incurred for more than a weekly period (but not less often than quarterly) under plans, funds, or programs, which cover the particular weekly period, are deemed to be constructively made or incurred during such weekly period. Such laborers and mechanics shall be paid the appropriate wage rate and fringe benefits on the wage determination for the classification of work actually performed, without regard to skill, except as provided in paragraphs 4 and 5 of this Section IV.

b. Laborers or mechanics performing work in more than one classification may be compensated at the rate specified for each classification for the time actually worked therein, provided, that the employer's payroll records accurately set forth the time spent in each classification in which work is performed.

c. All rulings and interpretations of the Davis-Bacon Act and related acts contained in 29 CFR 1, 3, and 5 are herein incorporated by reference in this contract.

2. **Classification:**

a. The SHA contracting officer shall require that any class of laborers or mechanics employed under the contract, which is not listed in the wage determination, shall be classified in conformance with the wage determination.

b. The contracting officer shall approve an additional classification, wage rate and fringe benefits only when the following criteria have been met:

(1) the work to be performed by the additional classification requested is not performed by a classification in the wage determination;

(2) the additional classification is utilized in the area by the construction industry;

(3) the proposed wage rate, including any bona fide fringe benefits, bears a reasonable relationship to the wage rates contained in the wage determination; and

(4) with respect to helpers, when such a classification prevails in the area in which the work is performed.

c. If the contractor or subcontractors, as appropriate, the laborers and mechanics (if known) to be employed in the additional classification or their representatives, and the contracting officer agree on the classification and wage rate (including the amount designated for fringe benefits where appropriate), a report of the action taken shall be sent by the contracting officer to the DOL, Administrator of the Wage and Hour Division, Employment Standards Administration, Washington, D.C. 20210. The Wage and Hour Administrator, or an authorized representative, will approve, modify, or disapprove every additional classification action within 30 days of receipt and so advise the contracting officer or will notify the contracting officer within the 30-day period that additional time is necessary.

d. In the event the contractor or subcontractors, as appropriate, the laborers or mechanics to be employed in the additional classification or their representatives, and the contracting officer do not agree on the proposed classification and wage rate (including the amount designated for fringe benefits, where appropriate), the contracting officer shall refer the questions, including the views of all interested parties and the recommendation of the contracting officer, to the Wage and Hour Administrator for determination. Said Administrator, or an authorized representative, will issue a determination within 30 days of receipt and so advise the contracting officer or will notify the contracting officer within the 30-day period that additional time is necessary

e. The wage rate (including fringe benefits where appropriate) determined pursuant to paragraph 2c or 2d of this Section IV shall be paid to all workers performing work in the additional classification from the first day on which work is performed in the classification.

3. **Payment of Fringe Benefits:**

a. Whenever the minimum wage rate prescribed in the contract for a class of laborers or mechanics includes a fringe benefit which is not expressed as an hourly rate, the contractor or subcontractors, as appropriate, shall either pay the benefit as stated in the wage determination or shall pay another bona fide fringe benefit or an hourly case equivalent thereof.

b. If the contractor or subcontractor, as appropriate, does not make payments to a trustee or other third person, he/she may consider as a part of the wages of any laborer or mechanic the amount of any costs reasonably anticipated in providing bona fide fringe benefits under a plan or program, provided, that the Secretary of Labor has found, upon the written request of the contractor, that the applicable standards of the Davis-Bacon Act have been met. The Secretary of Labor may require the contractor to set aside in a separate account assets for the meeting of obligations under the plan or program.

4. **Apprentices and Trainees (Programs of the U.S. DOL) and Helpers:**

a. Apprentices:

(1) Apprentices will be permitted to work at less than the predetermined rate for the work they performed when they are employed pursuant to and individually registered in a bona fide apprenticeship program registered with the DOL, Employment and Training Administration, Bureau of Apprenticeship and Training, or with a State apprenticeship agency recognized by the Bureau, or if a person is employed in his/her first 90 days of probationary employment as an apprentice in such an apprenticeship program, who is not individually registered in the program, but who has been certified by the Bureau of Apprenticeship and Training or a State apprenticeship agency (where appropriate) to be eligible for probationary employment as an apprentice.

(2) The allowable ratio of apprentices to journeyman-level employees on the job site in any craft classification shall not be greater than the ratio permitted to the contractor as to the entire work force under the registered program. Any employee listed on a payroll at an apprentice wage rate, who is not registered or otherwise employed as stated above, shall be paid not less than the applicable wage rate listed in the wage determination for the classification of work actually performed. In addition, any apprentice performing work on the job site in excess of the ratio permitted under the registered program shall be paid not less than the applicable wage rate on the wage determination for the work actually performed. Where a contractor or subcontractor is performing construction on a project in a locality other than that in which its program is registered, the ratios and wage rates (expressed in percentages of the journeyman-level hourly rate) specified in the contractor's or subcontractor's registered program shall be observed.

(3) Every apprentice must be paid at not less than the rate specified in the registered program for the apprentice's level ofprogress, expressed as a percentage of the journeyman-level hourly rate specified in the applicable wage determination. Apprentices shall be paid fringe benefits in accordance with the provisions of the apprenticeship program. If the apprenticeship program does not specify fringe benefits, apprentices must be paid the full amount of fringe benefits listed on the wage determination for the applicable classification. If the Administrator for the Wage and Hour Division determines that a different practice prevails for the applicable apprentice classification, fringes shall be paid in accordance with that determination.

(4) In the event the Bureau of Apprenticeship and Training, or a State apprenticeship agency recognized by the Bureau, withdraws approval of an apprenticeship program, the contractor or subcontractor will no longer be permitted to utilize apprentices at less than the applicable predetermined rate for the comparable work performed by regular employees until an acceptable program is approved.

b. Trainees:

(1) Except as provided in 29 CFR 5.16, trainees will not be permitted to work at less than the predetermined rate for the work performed unless they are employed pursuant to and individually registered in a program which has received prior approval, evidenced by formal certification by the DOL, Employment and Training Administration.

(2) The ratio of trainees to journeyman-level employees on the job site shall not be greater than permitted under the plan approved by the Employment and Training Administration. Any employee listed on the payroll at a trainee rate who is not registered and participating in a training plan approved by the Employment and Training Administration shall be paid not less than the applicable wage rate on the wage determination for the classification of work actually performed. In addition, any trainee performing work on the job site in excess of the ratio permitted under the registered program shall be paid not less than the applicable wage rate on the wage determination for the work actually performed.

(3) Every trainee must be paid at not less than the rate specified in the approved program for his/her level of progress, expressed as a percentage of the journeyman-level hourly rate specified in the applicable wage determination. Trainees shall be paid fringe benefits in accordance with the provisions of the trainee program. If the trainee program does not mention fringe benefits, trainees shall be paid the full amount of fringe benefits listed on the wage determination unless the Administrator of the Wage and Hour Division determines that there is an apprenticeship program associated with the corresponding journeyman-level wage rate on the wage determination which provides for less than full fringe benefits for apprentices, in which case such trainees shall receive the same fringe benefits as apprentices.

(4) In the event the Employment and Training Administration withdraws approval of a training program, the contractor or subcontractor will no longer be permitted to utilize trainees at less than the applicable predetermined rate for the work performed until an acceptable program is approved.

c. Helpers:

Helpers will be permitted to work on a project if the helper classification is specified and defined on the applicable wage determination or is approved pursuant to the conformance procedure set forth in Section IV.2. Any worker listed on a payroll at a helper wage rate, who is not a helper under a approved definition, shall be paid not less than the applicable wage rate on the wagedetermination for the classification of work actually performed.

5. **Apprentices and Trainees (Programs of the U.S. DOT):**

Apprentices and trainees working under apprenticeship and skill training programs which have been certified by the Secretary of Transportation as promoting EEO in connection with Federal-aid highway construction programs are not subject to the requirements of paragraph 4 of this Section IV. The straight time hourly wage rates for apprentices and trainees under such programs will be established by the particular programs. The ratio of apprentices and trainees to journeymen shall not be greater than permitted by the terms of the particular program.

6. **Withholding:**

The SHA shall upon its own action or upon written request of an authorized representative of the DOL withhold, or cause to be withheld, from the contractor or subcontractor under this contract or any other Federal contract with the same prime contractor, or any other Federally-assisted contract subject to Davis-Bacon prevailing wage requirements which is held by the

same prime contractor, as much of the accrued payments or advances as may be considered necessary to pay laborers and mechanics, including apprentices, trainees, and helpers, employed by the contractor or any subcontractor the full amount of wages required by the contract. In the event of failure to pay any laborer or mechanic, including any apprentice, trainee, or helper, employed or working on the site of the work, all or part of the wages required by the contract, the SHA contracting officer may, after written notice to the contractor, take such action as may be necessary to cause the suspension of any further payment, advance, or guarantee of funds until such violations have ceased.

7. **Overtime Requirements:**

No contractor or subcontractor contracting for any part of the contract work which may require or involve the employment of laborers, mechanics, watchmen, or guards (including apprentices, trainees, and helpers described in paragraphs 4 and 5 above) shall require or permit any laborer, mechanic, watchman, or guard in any workweek in which he/she is employed on such work, to work in excess of 40 hours in such workweek unless such laborer, mechanic, watchman, or guard receives compensation at a rate not less than one-and-one-half times his/her basic rate of pay for all hours worked in excess of 40 hours in such workweek.

8. **Violation:**

Liability for Unpaid Wages; Liquidated Damages: In the event of any violation of the clause set forth in paragraph 7 above, the contractor and any subcontractor responsible thereof shall be liable to the affected employee for his/her unpaid wages. In addition, such contractor and subcontractor shall be liable to the United States (in the case of work done under contract for the District of Columbia or a territory, to such District or to such territory) for liquidated damages. Such liquidated damages shall be computed with respect to each individual laborer, mechanic, watchman, or guard employed in violation of the clause set forth in paragraph 7, in the sum of $10 for each calendar day on which such employee was required or permitted to work in excess of the standard work week of 40 hours without payment of the overtime wages required by the clause set forth in paragraph 7.

9. **Withholding for Unpaid Wages and Liquidated Damages:**

The SHA shall upon its own action or upon written request of any authorized representative of the DOL withhold, or cause to be withheld, from any monies payable on account of work performed by the contractor or subcontractor under any such contract or any other Federal contract with the same prime contractor, or any other Federally-assisted contract subject to the Contract Work Hours and Safety Standards Act, which is held by the same prime contractor, such sums as may be determined to be necessary to satisfy any liabilities of such contractor or subcontractor for unpaid wages and liquidated damages as provided in the clause set forth in paragraph 8 above.

V. STATEMENTS AND PAYROLLS

(Applicable to all Federal-aid construction contracts exceeding $2,000 and to all related subcontracts, except for projects located on roadways classified as local roads or rural collectors, which are exempt.)

1. **Compliance with Copeland Regulations (29 CFR 3):**

The contractor shall comply with the Copeland Regulations of the Secretary of Labor which are herein incorporated by reference.

2. **Payrolls and Payroll Records:**

a. Payrolls and basic records relating thereto shall be maintained by the contractor and each subcontractor during the course of the work and preserved for a period of 3 years from the date of completion of the contract for all laborers, mechanics, apprentices, trainees, watchmen, helpers, and guards working at the site of the work.

b. The payroll records shall contain the name, social security number, and address of each such employee; his or her correct classification; hourly rates of wages paid (including rates of contributions or costs anticipated for bona fide fringe benefits or cash equivalent thereof the types described in Section 1(b)(2)(B) of the Davis Bacon Act); daily and weekly number of hours worked; deductions made; and actual wages paid. In addition, for Appalachian contracts, the payroll records shall contain a notation indicating whether the employee does, or does not, normally reside in the labor area as defined in Attachment A, paragraph 1. Whenever the Secretary of Labor, pursuant to Section IV, paragraph 3b, has found that the wages of any laborer or mechanic include the amount of any costs reasonably anticipated in providing benefits under a plan or program described in Section 1(b)(2)(B) of the Davis Bacon Act, the contractor and each subcontractor shall maintain records which show that the commitment to provide such benefits is enforceable, that the plan or program is financially responsible, that the plan or program has been communicated in writing to the laborers or mechanics affected, and show the cost anticipated or the actual cost incurred in providing benefits. Contractors or subcontractors employing apprentices or trainees under approved programs shall maintain written evidence of the registration of apprentices and trainees, and ratios and wage rates prescribed in the applicable programs.

c. Each contractor and subcontractor shall furnish, each week in which any contract work is performed, to the SHA resident engineer a payroll of wages paid each of its employees (including apprentices, trainees, and helpers, described in Section IV, paragraphs 4 and 5, and watchmen and guards engaged on work during the preceding weekly payroll period). The payroll submitted required to be maintained under paragraph 2b of this Section V. This information may be submitted in any form desired. Optional Form WH-347 is available for this purpose and may be purchased from the Superintendent of Documents (Federal stock number 029-005-0014-1), U.S. Government Printing Office, Washington, D.C. 20402. The prime contractor is responsible for the submission of copies of payrolls by all subcontractors.

d. Each payroll submitted shall be accompanied by a "Statement of Compliance," signed by the contractor or subcontractor or his/her agent who pays or supervises the payment of the persons employed under the contract and shall certify the following:

(1) that the payroll for the payroll period contains the information required to be maintained under paragraph 2b of this Section V and that such information is correct and complete;

(2) that such laborer or mechanic (including each helper, apprentice, and trainee) employed on the contract during the payroll period has been paid the full weekly wages earned,

without rebate, either directly or indirectly, and that no deductions have been made either directly or indirectly from the full wages earned, other than permissible deductions as set forth in the Regulations, 29 CFR 3;

(3) that each laborer or mechanic has been paid not less that the applicable wage rate and fringe benefits or cash equivalent for the classification of worked performed, as specified in the applicable wage determination incorporated into the contract.

e. The weekly submission of a properly executed certification set forth on the reverse side of Optional Form WH-347 shall satisfy the requirement for submission of the "Statement of Compliance" required by paragraph 2d of this Section V.

f. The falsification of any of the above certifications may subject the contractor to civil or criminal prosecution under 18 U.S.C. 1001 and 31 U.S.C. 231.

g. The contractor or subcontractor shall make the records required under paragraph 2b of this Section V available for inspection, copying, or transcription by authorized representatives of the SHA, the FHWA, or the DOL, and shall permit such representatives to interview employees during working hours on the job. If the contractor or subcontractor fails to submit the required records or to make them available, the SHA, the FHWA, the DOL, or all may, after written notice to the contractor, sponsor, applicant, or owner, take such actions as may be necessary to cause the suspension of any further payment, advance, or guarantee of funds. Furthermore, failure to submit the required records upon request or to make such records available may be grounds for debarment action pursuant to 29 CFR 5.12.

VI. RECORD OF MATERIALS, SUPPLIES, AND LABOR

1. On all Federal-aid contracts on the National Highway System, except those which provide solely for the installation of protective devices at railroad grade crossings, those which are constructed on a force account or direct labor basis, highway beautification contracts, and contracts for which the total final construction cost for roadway and bridge is less than $1,000,000 (23 CFR 635) the contractor shall:

a. Become familiar with the list of specific materials and supplies contained in Form FHWA-47, "Statement of Materials and Labor Used by Contractor of Highway Construction Involving Federal Funds," prior to the commencement of work under this contract.

b. Maintain a record of the total cost of all materials and supplies purchased for and incorporated in the work, and also of the quantities of those specific materials and supplies listed on Form FHWA-47, and in the units shown on Form FHWA-47.

c. Furnish, upon the completion of the contract, to the SHA resident engineer on Form FHWA-47 together with the data required in paragraph 1b relative to materials and supplies, a final labor summary of all contract work indicating the total hours worked and the total amount earned.

2. At the prime contractor's option, either a single report covering all contract work or separate reports for the contractor and for each subcontract shall be submitted.

VII. SUBLETTING OR ASSIGNING THE CONTRACT

1. The contractor shall perform with its own organization contract work amounting to not less than 30 percent (or a greater percentage if specified elsewhere in the contract) of the total original contract price, excluding any specialty items designated by the State. Specialty items may be performed by subcontract and the amount of any such specialty items performed may be deducted from the total original contract price before computing the amount of work required to be performed by the contractor's own organization (23 CFR 635).

a. "Its own organization" shall be construed to include only workers employed and paid directly by the prime contractor and equipment owned or rented by the prime contractor, with or without operators. Such term does not include employees or equipment of a subcontractor, assignee, or agent of the prime contractor.

b. "Specialty Items" shall be construed to be limited to work that requires highly specialized knowledge, abilities, or equipment not ordinarily available in the type of contracting organizations qualified and expected to bid on the contract as a whole and in general are to be limited to minor components of the overall contract.

2. The contract amount upon which the requirements set forth in paragraph 1 of Section VII is computed includes the cost of material and manufactured products which are to be purchased or produced by the contractor under the contract provisions.

3. The contractor shall furnish (a) a competent superintendent or supervisor who is employed by the firm, has full authority to direct performance of the work in accordance with the contract requirements, and is in charge of all construction operations (regardless of who performs the work) and (b) such other of its own organizational resources (supervision, management, and engineering services) as the SHA contracting officer determines is necessary to assure the performance of the contract.

4. No portion of the contract shall be sublet, assigned or otherwise disposed of except with the written consent of the SHA contracting officer, or authorized representative, and such consent when given shall not be construed to relieve the contractor of any responsibility for the fulfillment of the contract. Written consent will be given only after the SHA has assured that each subcontract is evidenced in writing and that it contains all pertinent provisions and requirements of the prime contract.

VIII. SAFETY: ACCIDENT PREVENTION

1. In the performance of this contract the contractor shall comply with all applicable Federal, State, and local laws governing safety, health, and sanitation (23 CFR 635). The contractor shall provideall safeguards, safety devices and protective equipment and take any other needed actions as it determines, or as the SHA contracting officer may determine, to be reasonably necessary to protect the life and health of employees on the job and the safety of the public and to protect property in connection with the performance of the work covered by the contract.

2. It is a condition of this contract, and shall be made a condition of each subcontract, which the contractor enters into pursuant to this contract, that the contractor and any subcontractor shall not permit any employee, in performance of the contract, to work in surroundings or under conditions which are unsanitary,

hazardous or dangerous to his/her health or safety, as determined under construction safety and health standards (29 CFR 1926) promulgated by the Secretary of Labor, in accordance with Section 107 of the Contract Work Hours and Safety Standards Act (40 U.S.C. 333).

3. Pursuant to 29 CFR 1926.3, it is a condition of this contract that the Secretary of Labor or authorized representative thereof, shall have right of entry to any site of contract performance to inspect or investigate the matter of compliance with the construction safety and health standards and to carry out the duties of the Secretary under Section 107 of the Contract Work Hours and Safety Standards Act (40 U.S.C. 333).

IX. FALSE STATEMENTS CONCERNING HIGHWAY PROJECTS

In order to assure high quality and durable construction in conformity with approved plans and specifications and a high degree of reliability on statements and representations made by engineers, contractors, suppliers, and workers on Federal-aid highway projects, it is essential that all persons concerned with the project perform their functions as carefully, thoroughly, and honestly as possible. Willful falsification, distortion, or misrepresentation with respect to any facts related to the project is a violation of Federal law. To prevent any misunderstanding regarding the seriousness of these and similar acts, the following notice shall be posted on each Federal-aid highway project (23 CFR 635) in one or more places where it is readily available to all persons concerned with the project:

NOTICE TO ALL PERSONNEL ENGAGED ON FEDERAL-AID HIGHWAY PROJECTS

18 U.S.C. 1020 reads as follows:

"Whoever, being an officer, agent, or employee of the United States, or of any State or Territory, or whoever, whether a person, association, firm, or corporation, knowingly makes any false statement, false representation, or false report as to the character, quality, quantity, or cost of the material used or to be used, or the quantity or quality of the work performed or to be performed, or the cost thereof in connection with the submission of plans, maps, specifications, contracts, or costs of construction on any highway or related project submitted for approval to the Secretary of Transportation; or

Whoever knowingly makes any false statement, false representation, false report or false claim with respect to the character, quality, quantity, or cost of any work performed or to be performed, or materials furnished or to be furnished, in connection with the construction of any highway or related project approved by the Secretary of Transportation; or

Whoever knowingly makes any false statement or false represen-tation as to material fact in any statement, certificate, or report submitted pursuant to provisions of the Federal-aid Roads Act approved July 1, 1916, (39 Stat. 355), as amended andsupplemented;

Shall be fined not more that $10,000 or imprisoned not more than 5 years or both."

X. IMPLEMENTATION OF CLEAN AIR ACT AND FEDERAL WATER POLLUTION CONTROL ACT

(Applicable to all Federal-aid construction contracts and to all related subcontracts of $100,000 or more.)

By submission of this bid or the execution of this contract, or subcontract, as appropriate, the bidder, Federal-aid construction contractor, or subcontractor, as appropriate, will be deemed to have stipulated as follows:

1. That any facility that is or will be utilized in the performance of this contract, unless such contract is exempt under the Clean Air Act, as amended (42 U.S.C. 1857 et seq., as amended by Pub.L. 91-604), and under the Federal Water Pollution Control Act, as amended (33 U.S.C. 1251 et seq., as amended by Pub.L. 92-500), Executive Order 11738, and regulations in implementation thereof (40 CFR 15) is not listed, on the date of contract award, on the U.S. Environmental Protection Agency (EPA) List of Violating Facilities pursuant to 40 CFR 15.20.

2. That the firm agrees to comply and remain in compliance with all the requirements of Section 114 of the Clean Air Act and Section 308 of the Federal Water Pollution Control Act and all regulations and guidelines listed thereunder.

3. That the firm shall promptly notify the SHA of the receipt of any communication from the Director, Office of Federal Activities, EPA, indicating that a facility that is or will be utilized for the contract is under consideration to be listed on the EPA List of Violating Facilities.

4. That the firm agrees to include or cause to be included the requirements of paragraph 1 through 4 of this Section X in every nonexempt subcontract, and further agrees to take such action as the government may direct as a means of enforcing such require-ments.

XI. CERTIFICATION REGARDING DEBARMENT, SUSPENSION, INELIGIBILITY AND VOLUNTARY EXCLUSION

1. **Instructions for Certification - Primary Covered Transactions:**

(Applicable to all Federal-aid contracts - 49 CFR 29)

a. By signing and submitting this proposal, the prospective primary participant is providing the certification set out below.

b. The inability of a person to provide the certification set out below will not necessarily result in denial of participation in this covered transaction. The prospective participant shall submit an explanation of why it cannot provide the certification set out below. The certification or explanation will be considered in connection with the department or agency's determination whether to enter into this transaction. However, failure of the prospective primary participant to furnish a certification or an explanation shall disqualify such a person from participation in this transaction.

c. The certification in this clause is a material representation of fact upon which reliance was placed when the department or agency determined to enter into this transaction. If it is later determined that the prospective primary participant knowinglyrendered an erroneous certification, in addition to other remedies available to the Federal Government, the department or agency may terminate this transaction for cause of default.

d. The prospective primary participant shall provide immediate written notice to the department or agency to whom this proposal is submitted if any time the prospective primary participant learns that its certification was erroneous when submitted or has become erroneous by reason of changed circumstances.

e. The terms "covered transaction," "debarred," "suspended," "ineligible," "lower tier covered transaction," "participant," "person," "primary covered transaction," "principal," "proposal," and "voluntarily excluded," as used in this clause, have the meanings set out in the Definitions and Coverage sections of rules implementing Executive Order 12549. You may contact the department or agency to which this proposal is submitted for assistance in obtaining a copy of those regulations.

f. The prospective primary participant agrees by submitting this proposal that, should the proposed covered transaction be entered into, it shall not knowingly enter into any lower tier covered transaction with a person who is debarred, suspended, declared ineligible, or voluntarily excluded from participation in this covered transaction, unless authorized by the department or agency entering into this transaction.

g. The prospective primary participant further agrees by submitting this proposal that it will include the clause titled "Certification Regarding Debarment, Suspension, Ineligibility and Voluntary Exclusion-Lower Tier Covered Transaction," provided by the department or agency entering into this covered transaction, without modification, in all lower tier covered transactions and in all solicitations for lower tier covered transactions.

h. A participant in a covered transaction may rely upon a certification of a prospective participant in a lower tier covered transaction that is not debarred, suspended, ineligible, or voluntarily excluded from the covered transaction, unless it knows that the certification is erroneous. A participant may decide the method and frequency by which it determines the eligibility of its principals. Each participant may, but is not required to, check the nonprocurement portion of the "Lists of Parties Excluded From Federal Procurement or Nonprocurement Programs" (Nonprocurement List) which is compiled by the General Services Administration.

i. Nothing contained in the foregoing shall be construed to require establishment of a system of records in order to render in good faith the certification required by this clause. The knowledge and information of participant is not required to exceed that which is normally possessed by a prudent person in the ordinary course of business dealings.

j. Except for transactions authorized under paragraph f of these instructions, if a participant in a covered transaction knowingly enters into a lower tier covered transaction with a person who is suspended, debarred, ineligible, or voluntarily excluded from participation in this transaction, in addition to other remedies available to the Federal Government, the department or agency may terminate this transaction for cause or default.

* * * * *

Certification Regarding Debarment, Suspension, Ineligibility and Voluntary Exclusion--Primary Covered Transactions

1. The prospective primary participant certifies to the best of its knowledge and belief, that it and its principals:

a. Are not presently debarred, suspended, proposed for debarment, declared ineligible, or voluntarily excluded from covered transactions by any Federal department or agency;

b. Have not within a 3-year period preceding this proposal been convicted of or had a civil judgement rendered against them for commission of fraud or a criminal offense in connection with obtaining, attempting to obtain, or performing a public (Federal, State or local) transaction or contract under a public transaction; violation of Federal or State antitrust statutes or commission of embezzlement, theft, forgery, bribery, falsification or destruction of records, making false statements, or receiving stolen property;

c. Are not presently indicted for or otherwise criminally or civilly charged by a governmental entity (Federal, State or local) with commission of any of the offenses enumerated in paragraph 1b of this certification; and

d. Have not within a 3-year period preceding this application/proposal had one or more public transactions (Federal, State or local) terminated for cause or default.

2. Where the prospective primary participant is unable to certify to any of the statements in this certification, such prospective participant shall attach an explanation to this proposal.

* * * * *

2. **Instructions for Certification - Lower Tier Covered Transactions:**

(Applicable to all subcontracts, purchase orders and other lower tier transactions of $25,000 or more - 49 CFR 29)

a. By signing and submitting this proposal, the prospective lower tier is providing the certification set out below.

b. The certification in this clause is a material representation of fact upon which reliance was placed when this transaction was entered into. If it is later determined that the prospective lower tier participant knowingly rendered an erroneous certification, in addition to other remedies available to the Federal Government, the department, or agency with which this transaction originated may pursue available remedies, including suspension and/or debarment.

c. The prospective lower tier participant shall provide immediate written notice to the person to which this proposal is submitted if at any time the prospective lower tier participant learns that its certification was erroneous by reason of changed circumstances.

d. The terms "covered transaction," "debarred," "suspended," "ineligible," "primary covered transaction," "participant," "person," "principal," "proposal," and "voluntarily excluded," as used in this clause, have the meanings set out in the Definitions and Coverage sections of rules implementing Executive

Order 12549. You may contact the person to which this proposal is submitted for assistance in obtaining a copy of those regulations.

e. The prospective lower tier participant agrees by submitting this proposal that, should the proposed covered transaction be entered into, it shall not knowingly enter into any lower tier covered transaction with a person who is debarred, suspended, declared ineligible, or voluntarily excluded from participation in this covered transaction, unless authorized by the department or agency with which this transaction originated.

f. The prospective lower tier participant further agrees by submitting this proposal that it will include this clause titled "Certification Regarding Debarment, Suspension, Ineligibility and Voluntary Exclusion-Lower Tier Covered Transaction," without modification, in all lower tier covered transactions and in all solicitations for lower tier covered transactions.

g. A participant in a covered transaction may rely upon a certification of a prospective participant in a lower tier covered transaction that is not debarred, suspended, ineligible, or voluntarily excluded from the covered transaction, unless it knows that the certification is erroneous. A participant may decide the method and frequency by which it determines the eligibility of its principals. Each participant may, but is not required to, check the Nonprocurement List.

h. Nothing contained in the foregoing shall be construed to require establishment of a system of records in order to render in good faith the certification required by this clause. The knowledge and information of participant is not required to exceed that which is normally possessed by a prudent person in the ordinary course of business dealings.

i. Except for transactions authorized under paragraph e of these instructions, if a participant in a covered transaction knowingly enters into a lower tier covered transaction with a person who is suspended, debarred, ineligible, or voluntarily excluded from participation in this transaction, in addition to other remedies available to the Federal Government, the department or agency with which this transaction originated may pursue available remedies, including suspension and/or debarment.

* * * * *

Certification Regarding Debarment, Suspension, Ineligibility and Voluntary Exclusion--Lower Tier Covered Transactions:

1. The prospective lower tier participant certifies, by submission of this proposal, that neither it nor its principals is presently debarred, suspended, proposed for debarment, declared ineligible, or voluntarily excluded from participation in this transaction by any Federal department or agency.

2. Where the prospective lower tier participant is unable to certify to any of the statements in this certification, such prospective participant shall attach an explanation to this proposal.

* * * * *

XII. CERTIFICATION REGARDING USE OF CONTRACT FUNDS FOR LOBBYING

(Applicable to all Federal-aid construction contracts and to all related subcontracts which exceed $100,000 - 49 CFR 20)

1. The prospective participant certifies, by signing and submitting this bid or proposal, to the best of his or her knowledge and belief, that:

a. No Federal appropriated funds have been paid or will be paid, by or on behalf of the undersigned, to any person for influencing or attempting to influence an officer or employee of any Federal agency, a Member of Congress, an officer or employee of Congress, or an employee of a Member of Congress in connection with the awarding of any Federal contract, the making of any Federal grant, the making of any Federal loan, the entering into of any cooperative agreement, and the extension, continuation, renewal, amendment, or modification of any Federal contract, grant, loan, or cooperative agreement.

b. If any funds other than Federal appropriated funds have been paid or will be paid to any person for influencing or attempting to influence an officer or employee of any Federal agency, a Member of Congress, an officer or employee of Congress, or an employee of a Member of Congress in connection with this Federal contract, grant, loan, or cooperative agreement, the undersigned shall complete and submit Standard Form-LLL, "Disclosure Form to Report Lobbying," in accordance with its instructions.

2. This certification is a material representation of fact upon which reliance was placed when this transaction was made or entered into. Submission of this certification is a prerequisite for making or entering into this transaction imposed by 31 U.S.C. 1352. Any person who fails to file the required certification shall be subject to a civil penalty of not less than $10,000 and not more than $100,000 for each such failure.

3. The prospective participant also agrees by submitting his or her bid or proposal that he or she shall require that the language of this certification be included in all lower tier subcontracts, which exceed $100,000 and that all such recipients shall certify and disclose accordingly.

NOTICE OF REQUIREMENTS FOR AFFIRMATIVE ACTION TO ENSURE EQUAL EMPLOYMENT OPPORTUNITY (EXECUTIVE ORDER 11246)

1. The Offeror's or Bidder's attention is called to the "Equal Opportunity Clause" and the "Standard Federal Equal Employment Opportunity Construction Contract Specifications" set forth herein.

2. The goals and timetables for minority and female participation, expressed in percentage terms for the Contractor's aggregate workforce in each trade on all construction work in the covered area, are as follows:

Timetables	Goals for female participation in each trade (percent)
From April 1, 1978 until March 31, 1979	3.1
From April 1, 1979 until March 31, 1980	5.1
From April 1, 1980 until March 31, 1981	6.9

Until further notice	Goals for minority participation for each trade (percent)
SHSA Cities:	
Pascagoula - Moss Point	16.9
Biloxi - Gulfport	19.2
Jackson	30.3
SMSA Counties:	
Desoto	32.3
Hancock, Harrison, Stone	19.2
Hinds, Rankin	30.3
Jackson	16.9
Non-SMSA Counties:	
George, Greene	26.4
Alcorn, Benton, Bolivar, Calhoun, Carroll, Chickasaw, Clay, Coahoma,Grenada, Itawamba, Lafayette, Lee, Leflore, Marshall, Monroe,Montgomery, Panola, Pontotoc, Prentiss, Quitman, Sunflower,Tallahatchie, Tate, Tippah, Tishomingo, Tunica, Union, Washington, Webster, Yalobusha	26.5
Attala, Choctaw, Claiborne, Clarke, Copiah, Covington, Franklin, Holmes, Humphreys, Issaquena, Jasper, Jefferson, Jefferson Davis, Jones Kemper, Lauderdale, Lawrence, Leake, Lincoln, Lowndes, Madison, Neshoba, Newton, Noxubee, Oktibbeha, Scott, Sharkey, Simpson, Smith, Warren, Wayne, Winston, Yazoo	32.0
Forrest, Lamar, Marion, Pearl River, Perry, Pike, Walthall	27.7
Adams, Amite, Wilkinson	30.4

These goals are applicable to all the Contractor's construction work (whether or not it is Federal or federally assisted) performed in the covered area. If the contractor performs construction work in a geographical area located outside of the covered area, it shall apply the goals established for such geographical area where the work is actually performed. With regard to this second area, the contractor also is subject to the goals for both its federally involved and nonfederally involved construction.

The Contractor's compliance with the Executive Order and the regulations in CFR Part 60-4 shall be based on its implementation of the Equal Opportunity clause, specific affirmative action obligations required by the specifications set forth in 41 CFR 60-4.3(a), and its efforts to meet the goals. The hours of minority and female employment and training must be substantially uniform throughout the length of the contract, and in each trade, and the Contractor shall make a good faith effort to employ minorities and women evenly on each of its projects. The transfer of minority or female employees or trainees from Contractor to Contractor or from project to project for the sole purpose of meeting the Contractor's goals shall be a violation of the contract, the Executive Order and the regulations in 41 CFR Part 60-4. Compliance with the goals will be measured against the total work hours performed.

3. The Contractor shall provide written notification to the Director of the Office of Federal Contract Compliance Programs within 10 working days of award of any construction subcontract in excess of $10,000 at any tier for construction work under the contract resulting from this solicitation. The notification shall list the name, address and telephone number of the subcontractor, employer identification number of the subcontractor, estimated dollar amount of the subcontract; estimated starting and completion dates of the subcontract; and the geographical area in which the subcontract is to be performed.

4. As used in this Notice, and in the contract resulting from this solicitation, the "covered area" is to the county and city (if any), stated in the advertisement.

5. The notification required in Paragraph 3 shall be addressed to the following:

Contract Compliance Officer
Mississippi Department of Transportation
P.O. Box 1850
Jackson, Mississippi 39215-1850

MISSISSIPPI DEPARTMENT OF TRANSPORTATION

SPECIAL PROVISION NO. 907-105-3 **CODE: (IS)**

DATE: **02/14/2006**

SUBJECT: **Cooperation By Contractor**

Section 105, Control of Work, of the 2004 Edition of the Mississippi Standard Specifications for Road and Bridge Construction is modified as follows:

907-105.05--Cooperation by Contractor. In the third sentence of the second paragraph of Subsection 105.05 on page 35, change "Notice to Proceed" to "Notice of Award".

Delete the fourth paragraph of Subsection 105.05 on page 35, and substitute the following.

The Contractor shall also designate a responsible person whose primary duty shall be to monitor and maintain the effectiveness of the erosion control plan, including NPDES permit requirements. This responsible person must be a Certified Erosion Control Person certified by an organization approved by the Department. Prior to or at the pre-construction conference, the Contractor shall designate in writing the Certified Erosion Control Person to the Project Engineer. The designated Certified Erosion Control Person shall be assigned to only one (1) project. When special conditions exist, such as two (2) adjoining projects or two (2) projects in close proximity, the Contractor may request in writing that the State Construction Engineer approve the use of one (1) Certified Erosion Control Person for both projects. The Contractor may request in writing that the Engineer authorize a substitute Certified Erosion Control Person to act in the absence of the Certified Erosion Control Person. The substitute Certified Erosion Control Person must also be certified by an organization approved by the Department. A copy of the Certified Erosion Control Person's certification must be included in the Contractor's Protection Plan as outlined in Subsection 907-107.22.1. This in no way modifies the requirements regarding the assignment and availability of the superintendent.

MISSISSIPPI DEPARTMENT OF TRANSPORTATION

SUPPLEMENT TO SPECIAL PROVISION NO. 907-107-1

DATE: 03/21/2006

SUBJECT: Liability Insurance

In the first sentence of the first paragraph of Subsection 907-107.14.2.1 on page 1, change "$300,000 each occurrence" to "$500,000 each occurrence".

MISSISSIPPI DEPARTMENT OF TRANSPORTATION

SPECIAL PROVISION NO. 907-107-1 **CODE: (IS)**

DATE: **05/03/2004**

SUBJECT: **Liability Insurance**

Section 107, Legal Relations and Responsibility to Public, of the 2004 Edition of the Mississippi Standard Specifications for Road and Bridge Construction is hereby amended as follows:

907-107.14.2--Liability Insurance. Delete in toto Subsection 107.14.2 beginning on page 60 and substitute:

907-107.14.2.1--General. The Contractor shall carry Contractor's liability, including subcontractors and contractual, with limits not less than: $300,000 each occurrence; $1,000,000 aggregate; automobile liability - $500,000 combined single limit - each accident; Workers' Compensation and Employers' Liability - Statutory & $100,000 each accident; $100,000 each employee; $500,000 policy limit. Each policy shall be signed or countersigned by a Mississippi Resident Agent of the insurance company.

The Contractor shall have certificates furnished to the Department from the insurance companies providing the required coverage. The certificates shall be on the form furnished by the Department and will show the types and limits of coverage.

907-107.14.2.2--Railroad Protective. The following provisions are applicable to all work performed under a contract on, over or under the rights-of-way of each railroad shown on the plans.

The Contractor shall assume all liability for any and all damages to work, employees, servants, equipment and materials caused by railroad traffic.

Prior to starting any work on railroad property, the Contractor shall furnish satisfactory evidence to the Department that insurance of the forms and amounts set out herein in paragraphs (a) and (b) has been obtained. Also, the Contractor shall furnish similar evidence to the Railroad Company that insurance has been obtained in accordance with the Standard Provisions for General Liability Policies and the Railroad Protective Liability Form as published in the Code of Federal Regulations, 23 CFR 646, Subpart A. Evidence to the Railroad Company shall be in the form of a Certificate of Insurance for coverages required in paragraph (b), and the original policy of the Railroad Protective Liability Insurance for coverage required in paragraph (a).

All insurance herein specified shall be carried until the contract is satisfactorily complete as evidenced by a release of maintenance from the Department.

The Railroad Company shall be given at least 30 days notice prior to cancellation of the Railroad Protective Liability Insurance policy.

For work within the limits set out in Subsection 107.18 and this subsection, the Contractor shall provide insurance for bodily injury liability, property damage liability and physical damage to property with coverages and limits no less than shown in paragraphs (a) and (b). Bodily injury shall mean bodily injury, sickness, or disease, including death at anytime resulting therefrom. Property damage shall mean damages because of physical injury to or destruction of property, including loss of use of any property due to such injury or destruction. Physical damage shall mean direct and accidental loss of or damage to rolling stock and their contents, mechanical construction equipment or motive power equipment.

(a) **Railroad Protective Liability Insurance** shall be purchased on behalf of the Railroad Company with limits of $2,000,000 each occurrence; $6,000,000 aggregate applying separately to each annual period for lines without passenger trains. If the line carries passenger train(s), railroad protective liability insurance shall be purchased on behalf of the Railroad Company with limits of $5,000,000 each occurrence; $10,000,000 aggregate applying separately to each annual period.

Coverage shall be limited to damage suffered by the railroad on account of occurrences arising out of the work of the Contractor on or about the railroad right-of-way, independent of the railroad's general supervision or control, except as noted in paragraph 4 below.

Coverage shall include:

(1) death of or bodily injury to passengers of the railroad and employees of the railroad not covered by State workmen's compensation laws,

(2) personal property owned by or in the care, custody or control of the railroads,

(3) the Contractor, or any of the Contractor's agents or employees who suffer bodily injury or death as a result of acts of the railroad or its agents, regardless of the negligence of the railroads, and

(4) negligence of only the following classes of railroad employees:

(i) any supervisory employee of the railroad at the job site

(ii) any employee of the railroad while operating, attached to, or engaged on, work trains or other railroad equipment at the job site which are assigned exclusively to the Contractor, or

(iii) any employee of the railroad not within (i) or (ii) above who is specifically loaned or assigned to the work of the Contractor for prevention of accidents or protection or property, the cost of whose services is borne specifically by the Contractor or Governmental authority.

(b) **Regular Contractor's Liability**, including subcontractors, XCU and railroad contractual with limits of $1,000,000 each occurrence; $2,000,000 aggregate. **Automobile** with limits of $1,000,000 combined single limit any one accident; **Workers' Compensation and Employer's Liability** - statutory and $100,000 each accident; $100,000 each employee; $500,000 policy limit. **Excess/Umbrella Liability** $5,000,000 each occurrence; $5,000,000 aggregate. All coverage to be issued in the name of the Contractor shall be so written as to furnish protection to the Contractor respecting the Contractor's operations in performing work covered by the contract. Coverage shall include protection from damages arising out of bodily injury or death and damage or destruction of property which may be suffered by persons other than the Contractor's own employees.

In addition, the Contractor shall provide for and on behalf of each subcontractor by means of a separate and individual liability and property damage policy to cover like liability imposed upon the subcontractor as a result of the subcontractor's operations in the same amounts as contained above; or, in the alternative each subcontractor shall provide same.

MISSISSIPPI DEPARTMENT OF TRANSPORTATION

SPECIAL PROVISION NO. 907-107-2 **CODE: (IS)**

DATE: **08/12/2005**

SUBJECT: **Permits, Licenses and Taxes**

Section 107, Legal Relations and Responsibility to Public, of the 2004 Edition of the Mississippi Standard Specifications for Road and Bridge Construction is hereby amended as follows:

907-107.02--Permits, Licenses and Taxes. Delete in toto Subsection 107.02 on page 49 and substitute the following:

The Contractor or any Subcontractor shall have the duty to determine any and all permits and licenses required and to procure all permits and licenses, pay all charges, fees and taxes and issue all notices necessary and incidental to the due and lawful prosecution of the work. At any time during the life of this contract, the Department may audit the Contractor's or Subcontractor's compliance with the requirements of this section.

The Contractor or any Subcontractor is advised that the "Mississippi Special Fuel Tax Law", Section 27-55-501, et seq. and the Mississippi Use Tax Law, Section 27-67-1, et seq., and their requirements and penalties, apply to any contract or subcontract for construction, reconstruction, maintenance or repairs, for contracts or subcontracts entered into with the State of Mississippi, any political subdivision of the State of Mississippi, or any Department, Agency, Institute of the State of Mississippi or any political subdivision thereof.

The Contractor or any Subcontractor will be subject to one or more audits by the Department during the life of this contract to make certain that all applicable fuel taxes, as outlined in Section 27-55-501, et seq., and any sales and/or use taxes, as outlined in Section 27-67-1, et seq. are being paid in compliance with the law. The Department will notify the Mississippi State Tax Commission of the names and addresses of any Contractors or Subcontractors.

MISSISSIPPI DEPARTMENT OF TRANSPORTATION

SPECIAL PROVISION NO. 907-107-3 **CODE: (IS)**

DATE: **02/14/2006**

SUBJECT: **Contractor's Protection Plan**

Section 107, Legal Relations and Responsibility to Public, of the 2004 Edition of the Mississippi Standard Specifications for Road and Bridge Construction is hereby amended as follows:

907-107.22.1--Contractor's Protection Plan. After item number 3 in Subsection 107.22.1 on page 65, add the following:

4. A copy of the certification for the Contractor's Certified Erosion Control Person for monitoring and maintaining the effectiveness of the erosion control plan, including NPDES permit requirements.

MISSISSIPPI DEPARTMENT OF TRANSPORTATION

SPECIAL PROVISION NO. 907-108-11 **CODE: (IS)**

DATE: **04/21/2006**

SUBJECT: **Prosecution and Progress**

Section 108, Prosecution and Progress, of the 2004 Edition of the Mississippi Standard Specifications for Road and Bridge Construction is hereby amended as follows:

907-108.01--Subletting of Contract.

907-108.01.1--General. At the end of the last paragraph of Subsection 108.01.1 on page 73, add the following:

The Engineer will have the authority to suspend the work wholly or in part and to withhold payments because of the Contractor's failure to make prompt payment within 15 calendar days as required above, or failure to submit the required OCR-484 Form, Certification of Payments to Subcontractors, which is also designed to comply with prompt payment requirements.

907-108.02--Notice To Proceed. Delete the fourth paragraph of Subsection 108.02 on page 75 and substitute the following:

Upon written request from the Contractor and if circumstances permit, the Notice to Proceed may be issued at an earlier date subject to the conditions stated therein. The Contractor shall not be entitled to any monetary damages or extension of contract time for any delay claim or claim of inefficiency occurring between the early issuance Notice To Proceed date and the Notice to Proceed date stated in the contract.

907-108.06.1.2--Contract Time Assessment. At the end of the eighth paragraph of Subsection 108.06.1.2 on page 81, add the following:

When the approved progress schedule indicates that a controlling phase(s) is to be completed prior to December 1 and the physical features of the phase(s) have not been satisfactorily completed, beginning on December 1 the miscellaneous phase will be shown as the only active phase during the months of December, January, and February. Under this condition, time units, monthly time units divided by monthly calendar days, will be assessed in accordance with the applicable column in the TABLE OF TIME UNITS. If the physical features of the phase(s) have not been completed by March 1, the phase will resume as a controlling phase and time assessment will be made accordingly.

Delete the fourth and fifth sentence of the thirteenth paragraph of Subsection 108.06.1.2 on page 82, and substitute the following:

In the event mutual agreement cannot be reached, the Contractor will be allowed a maximum of 25 calendar days following the Contractor's receipt of the monthly report in question to file a protest Notice of Claim in accordance with the provisions of Subsection 105.17. Otherwise, the Engineer's assessment shall be final unless mathematical errors of assessment are subsequently found to exist.

MISSISSIPPI DEPARTMENT OF TRANSPORTATION

SPECIAL PROVISION NO. 907-109-3 **CODE: (IS)**

DATE: 04/06/2006

SUBJECT: Partial Payment

Section 109, Measurement and Payment, of the 2004 Edition of the Mississippi Standard Specifications for Road and Bridge Construction is hereby amended as follows:

907-109.04--Extra and Force Account Work. Delete the first sentence of the second paragraph of Subsection 109.04 under (d) on page 92 and substitute the following:

In the event an agreement cannot be reached for a particular piece of equipment, the book entitled "Rental Rate Blue Book For Construction Equipment" as published by EquipmentWatch® and is current at the time the force account work is authorized will be used to determine equipment ownership and operating expense rates.

907-109.06--Partial Payment.

907-109.06.1--General. In the fourth sentence of the third paragraph of Subsection 109.06.1 on page 94, change “15 calendar days” to “25 calendar Days”.

MISSISSIPPI DEPARTMENT OF TRANSPORTATION

SPECIAL PROVISION NO. 907-304-4 **CODE: (SP)**

DATE: **05/02/2006**

SUBJECT: **Crushed Stone Granular Materials**

Section 907-304, Granular Courses, of the 2004 Edition of the Mississippi Standard Specifications for Road and Bridge Construction is hereby amended as follows:

907-304.02--Materials. After the first paragraph of Subsection 304.02.1 on page 183, add the following:

Gradation requirements for crushed stone granular material shall meet the following:

Crushed Stone

Sieve Size	Percent Passing by Weight
1 1/2 inch	100
1 inch	90 - 100
1/2 inch	62 - 90
No. 4	30 - 65
No. 10	15 - 40
No. 200	3 - 16

Gradation requirements for crushed stone granular material size 825 shall meet the following:

Size 825

Sieve Size	Percent Passing by Weight
2 inch	100
1 1/2 inch	90 - 100
1 inch	75 - 98
1/2 inch	60 - 85
No. 4	40 - 65
No. 8	28 - 54
No. 16	19 - 42
No. 50	9 - 27
No. 200	4 - 18

Granular material, RAP shall be milled recycled asphalt pavement and shall be visually inspected by the Engineer to insure it is free from chunks and deleterious materials.

907-304.03--Construction Requirements.

907-304.03.5--Shaping, Compacting and Finishing. Delete the first table in Subsection 304.03.5 on page 186 and substitute the following:

Granular Material Class	Lot Average	Individual Test
7,8,9 or 10	97.0	93.0
5 or 6	99.0	95.0
3 or 4	100.0	96.0
1 or 2	102.0	98.0
Crushed Stone Courses*	99.0	95.0

* When placed on filter fabric on untreated subgrade, the individual tests and the average of the five (5) tests shall equal or exceed the following values:

Lot Average	Individual Test
96.0	92.0

Before the last paragraph of Subsection 304.03.5 on page 186, add the following:

Unless otherwise specified, density for granular material, RAP, shall be achieved by two passes of an approved roller and density tests will not be required.

For Size 825 crushed stone base, the required density shall equal or exceed ninety-nine percent (99.0%) with no single density below ninety-five percent (95.0%).

907-304.05--Basis of Payment. Add the "907" prefix to pay items 304-D, 304-E, 304-F, 304-G & 304-H on page 187.

SPECIAL PROVISION NO. 906-3

Training Special Provisions

This Training Special Provision supersedes subparagraph 7b of the Special Provision entitled "Specific Equal Employment Opportunity Responsibilities," (Attachment 1), and is in implementation of 23 U.S.C. 140(a).

As part of the Contractor's equal employment opportunity affirmative action program training shall be provided as follows:

> The Contractor shall provide on-the-job training aimed at developing full journeymen in the type of trade or job classification involved.

The number of trainees to be trained under this special provision will be as indicated in the bid schedule of the contract.

In the event that a Contractor subcontracts a portion of the contract work, he shall determine how many, if any, of the trainees are to be trained by the subcontractor, provided, however, that the Contractor shall retain the primary responsibility for meeting the training requirements imposed by this special provision. The Contractor shall also insure that this training special provision is made applicable to such subcontract. Where feasible, 25 percent of apprentices or trainees in each occupation shall be in their first year of apprenticeship or training.

The number of trainees shall be distributed among the work classifications on the basis of the Contractor's needs and the availability of journeymen in the various classifications within a reasonable area of recruitment. Prior to commencing construction, the Contractor shall submit to the State highway agency for approval the number of trainees to be trained in each selected classification and training program to be used. Furthermore, the Contractor shall specify the starting time for training in each of the classifications. The Contractor will be credited for each trainee employed by him on the contract work who is currently enrolled or becomes enrolled in an approved program and will be reimbursed for such trainees as provided hereinafter.

Training and upgrading of minorities and women toward journeymen status is a primary objective of this Training Special Provision. Accordingly, the Contractor shall make every effort to enroll minority trainees and women (e.g., by conducting systematic and direct recruitment through public and private sources likely to yield minority and women trainees) to the extent that such persons are available within a reasonable area of recruitment. The Contractor will be responsible for demonstrating the steps that he has taken in pursuance thereof, prior to a determination as to whether the Contractor is in compliance with this Training Special Provision. This training commitment is not intended, and shall not be used, to discriminate against any applicant for training, whether a member of a minority group or not.

No employee shall be employed as a trainee in any classification in which he has successfully completed a training course leading to journeyman status or in which he has been employed as a

journeyman. The Contractor should satisfy this requirement by including appropriate questions in the employee application or by other suitable means. Regardless of the method used the Contractor's records should document the findings in each case.

The minimum length and type of training for each classification will be as established in the training program selected by the Contractor and approved by the State highway agency and the Federal Highway Administration. The State highway agency and the Federal Highway Administration shall approve a program if it is reasonably calculated to meet the equal employment opportunity obligations of the Contractor and to qualify the average trainee for journeyman status in the classification concerned by the end of the training period. Furthermore, apprenticeship programs registered with the U.S. Department of Labor, Bureau of Apprenticeship and Training, or with a State apprenticeship agency recognized by the Bureau and training programs approved but not necessarily sponsored by the U.S. Department of Labor, Manpower Administration, Bureau of Apprenticeship and Training shall also be considered acceptable provided it is being administered in a manner consistent with the equal employment obligations of Federal-aid highway construction contracts. Approval or acceptance of a training program shall be obtained from the State prior to commencing work on the classification covered by the program. It is the intention of these provisions that training is to be provided in the construction crafts rather than clerk-typists or secretarial-type positions. Training is permissible in lower level management positions such as office engineers, estimators, timekeepers, etc., where the training is oriented toward construction applications. Training in the laborer classification may be permitted provided that significant and meaningful training is provided and approved by the division office. Some offsite training is permissible as long as the training is an integral part of an approved training program and does not comprise a significant part of the overall training.

Except as otherwise noted below, the Contractor will be reimbursed 80 cents per hour of training given an employee on this contract in accordance with an approved training program. As approved by the engineer, reimbursement will be made for training persons in excess of the number specified herein. This reimbursement will be made even though the Contractor receives additional training program funds from other sources, provided such other does not specifically prohibit the Contractor from receiving other reimbursement. Reimbursement for offsite training indicated above may only be made to the Contractor where he does one or more of the following and the trainees are concurrently employed on a Federal-aid project; contributes to the cost of the training, provides the instruction to the trainee or pays the trainee's wages during the offsite training period.

No payment shall be made to the Contractor if either the failure to provide the required training, or the failure to hire the trainee as a journeyman, is caused by the Contractor and evidences a lack of good faith on the part of the Contractor in meeting the requirements of this Training Special Provision. It is normally expected that a trainee will begin his training on the project as soon as feasible after start of work utilizing the skill involved and remain on the project as long as training opportunities exist in his work classification or until he has completed his training program. It is not required that all trainees be on board for the entire length of the contract. A

Contractor will have fulfilled his responsibilities under this Training Special Provision if he has provided acceptable training to the number of trainees specified. The number trained shall be determined on the basis of the total number enrolled on the contract for a significant period.

Trainees will be paid at least 60 percent of the appropriate minimum journeyman's rate specified in the contract for the first half of the training period, 75 percent for the third quarter of the training period, and 90 percent for the last quarter of the training period, unless apprentices or trainees in an approved existing program are enrolled as trainees on this project. In that case, the appropriate rates approved by the Departments of Labor or Transportation in connection with the existing program shall apply to all trainees being trained for the same classification who are covered by this Training Special Provision.

The Contractor shall furnish the trainee a copy of the program he will follow in providing the training. The Contractor shall provide each trainee with a certification showing the type and length of training satisfactorily completed.

The Contractor will provide for the maintenance of records and furnish periodic reports documenting his performance under this Training Special Provision.

SPECIAL PROVISION NO. 906-6

MISSISSIPPI DEPARTMENT OF TRANSPORTATION
ON-THE-JOB TRAINING PROGRAM

ALTERNATE TRAINING SPECIAL PROVISION

PURPOSE

The purpose of the On-The-Job Training (OJT) Program is to provide training for minority, female and economically disadvantaged individuals in order that they may develop marketable skills and gain journey status in the skilled craft classifications in which they are being trained.

INTRODUCTION

This voluntary OJT Program has been developed through the partnering efforts of the Road Builders of Mississippi, the Federal Highway Administration (FHWA) and the Mississippi Department of Transportation (MDOT).

The OJT Program has been designed for use by participating contractors and subcontractors in meeting their training needs. The objective of the OJT Program is to develop skilled workers in the skilled craft trade areas of highway construction who are sufficiently trained to be productive employees in the highway construction industry work force.

The success of the OJT Program will require that contractors and subcontractors take part in the program and follow uniform procedures in training and in tracking trainee's progress.

FUNDING

MDOT will establish an annual OJT Fund from which, contractors and subcontractors may bill the Department directly for hours worked by trainees. The funding source of this money will be state and federal funds for MDOT's OJT Program.

DISBURSEMENT OF FUNDS

MDOT will pay $3.00 per hour toward the trainee's salary for each hour of training performed by each trainee in an approved training program. Program reimbursements will be made directly to the prime or sub contractor. Requests for payment will be submitted to the Office of Civil Rights for approval.

Contractors must provide a signed invoice providing the following information to be reimbursed.

- Contractor's Name
- Mailing Address
- Trainee Name
- Social Security Number

- Race
- Sex
- Project Number
- Job Classification
- Total Number of Hours Completed

TRAINING PROGRAM APPROVAL

A. To use the OJT Program on highway construction projects, the contractor will notify the Department Office of Civil Rights using the On-the-Job Trainee Schedule Form. The notification must include the following information:

- Trainee Starting Date
- Project number (s) trainee starting on
- Training program (classification) to be used; and
- Number of Training Hours Required

B. If a contractor chooses to use a training program different from those listed in the OJT Program Manual, or desires to train in a different classification, the training program must be submitted in its entirety for approval by the Department and FHWA. The training proposal must include the following:

1. The primary objective of the program: To provide training for minority, female and economically disadvantaged individuals for development to full journey status in the work classifications in which they are being trained.

2. The minimum number of hours and type of training the trainee will receive as it relates to each specific task required to achieve journey status.

3. No less than minimum wage.

4. Trainee certification of completion.

5. Records and reports submitted to the Office of Civil Rights on a monthly basis.

DEPARTMENT RESPONSIBILITY

1. Department project staff will monitor trainees on the project. They will monitor payrolls for payment of correct wage rates and fringe benefits. The Office of Civil Rights will maintain a master list by contractor name, project number, trainee name and trainee social security number to aid project staff in monitoring trainees who work on multiple projects.

2. The Office of Civil Rights may elect to interview trainees periodically during the training period to assess their performance and training program.

CONTRACTOR RESPONSIBILITY

1. Trainees must be identified on payrolls (i.e. dragline trainee).

2. When any trainee completes a program, or is terminated for a reason or reasons other than successful completion, the contractor must include the date of completion or an explanation for the termination and date of termination on the OJT Termination Report.

3. The contractor will assign each trainee to a particular person--either a supervisor or a journeyman/woman who is proficient in the craft the trainee is being trained in, to ensure that timely instructional experience is received by the trainee. This person, cooperating with the appropriate company personnel, will see that proper records and the total intended training hours are completed during the allocated number of hours set up in the classification criteria.

4. The contractor has the prerogative of terminating the training period of the trainee and advancing the trainee to journey status. Approval requests must be submitted to the Office of Civil Rights with an explanation (***refer to 2 above***).

5. Upon notification from the contractor, the Department will issue a skill verification card and certificate of training to the trainee.

6. Trainees may be transferred to state-aid highway construction projects in order to complete the training program. If transfers are made the Office of Civil Rights must be notified on the Monthly Trainee Form. All of the training hours completed by trainees will count toward overall program completion.

7. Program reimbursements will be made directly to the prime or sub contractor.

WAGE RATE

The wage rate for all trainees is $5.15, during their OJT training program. Trainees shall be paid full fringe benefit amounts, where applicable. At the completion of the training program, the trainee shall receive the wages of a skilled journey.

RECRUITMENT AND SELECTION PROCEDURES

A. Prerequisites for Trainees

To be qualified for enrollment in the OJT Program, trainees must possess basic physical fitness for the work to be performed, dependability, willingness to learn and ability to follow instructions.

B. Licenses

Truck driver trainees must possess appropriate driver permits or licenses for the operation of Class A, B and C trucks. However, when an instructional permit is used in lieu of a license, the trainee must be accompanied by an operator who:

1. Holds a license corresponding to the vehicle being operated;

2. Has had at least one year of driving experience; and

3. Is occupying the seat next to the driver.

C. Recruitment

1. Notices and posters setting forth the contractor's Equal Employment Opportunity Policy and availability of training programs will be placed in areas readily accessible to employees, applicants for employment and potential employees.

2. The contractor must target minority, female or economically disadvantaged trainees.

3. The contractor will conduct systematic and direct recruitment through public and private employee referral sources. Contractors must submit the trainee's name and completed application form to the Office of Civil Rights for review and approval. Approval must be obtained before the trainee can begin work under the training program.

4. Present employees will be screened for upgrading.

D. Selection

1. The selection and employment of a person by participating contractor shall qualify the person for the OJT Program.

2. Selection will be made without regard to race, color, religion, sex, age or national origin and shall be completely nondiscriminatory.

3. Employment of trainees will be in accordance with the work force requirements of the contractor. Each contractor will hire and train the trainees for uses in their own organization.

4. Written certification of individuals under the category of economically disadvantaged can be provided to the contractor at the time of the interview. This certification must then be provided to the Office of Civil Rights with the other required information as part of the approval process for trainees.

- ***NOTE:*** The OJT Program is to provide training for minority, female and economically disadvantaged individuals in order that they may develop marketable skills and gain journey status in the skilled craft classifications in which they are being trained. However, this program does not exclude trainees that are not members of the above groups.

S E C T I O N 9 0 5 - P R O P O S A L

Date _____

Mississippi Transportation Commission
Jackson, Mississippi

Sirs: The following proposal is made on behalf of _____
_____ of _____
_____
for constructing the following designated project(s) within the time(s) hereinafter specified.

The plans are composed of drawings and blue prints on file in the offices of the Mississippi Department of Transportation, Jackson, Mississippi.

The Specifications are the current Standard Specifications of the Mississippi Department of Transportation approved by the Federal Highway Administration, except where superseded or amended by the plans, Special Provisions and Notice(s) to Bidders attached hereto and made a part thereof.

I (We) certify that I (we) possess a copy of said Standard and Supplemental Specifications.

Evidence of my (our) authority to submit the Proposal is hereby furnished. The proposal is made without collusion on the part of any person, firm or corporation. I (We) certify that I (we) have carefully examined the Plans, the Specifications, including the Special Provisions and Notice(s) to Bidders, herein, and have personally examined the site of the work. On the basis of the Specifications, Special Provisions, Notice(s) to Bidders, and Plans, I (we) propose to furnish all necessary machinery, tools, apparatus and other means of construction and do all the work and furnish all the materials in the manner specified. I (We) understand that the quantities mentioned herein are approximate only and are subject to either increase or decrease, and hereby propose to perform any increased or decreased quantities of work at the unit prices bid, in accordance with the above.

Attached hereto is a certified check, cashier's check or Proposal Guaranty Bond in the amount as required in the Advertisement (or, by law).

INSTRUCTION TO BIDDERS: Alternate and Optional Items on Bid Schedule.

1. Two or more items entered opposite a single unit quantity WITHOUT DEFINITE DESIGNATION AS "ALTERNATE ITEMS" are considered as "OPTIONAL ITEMS". Bidders may or may not indicate on bids the Optional Item proposed to be furnished or performed WITHOUT PREJUDICE IN REGARD TO IRREGULARITY OF BIDS.

2. Items classified on the bid schedule as "ALTERNATE ITEMS" and/or "ALTERNATE TYPES OF CONSTRUCTION" must be preselected and indicated on bids. However, "Alternate Types of Construction" may include Optional Items to be treated as set out in Paragraph 1, above.

3. Optional items not preselected and indicated on the bid schedule MUST be designated in accordance with Subsection 102.06 prior to or at the time of execution of the contract.

4. Optional and Alternate items designated must be used throughout the project.

I (We) further propose to perform all "force account or extra work" that may be required of me (us) on the basis provided in the Specifications and to give such work my (our) personal attention in order to see that it is economically performed.

S E C T I O N 9 0 5 -- P R O P O S A L (CONTINUED)

I (We) further propose to execute the attached contract agreement (Section 902) as soon as the work is awarded to me (us), and to begin and complete the work within the time limit(s) provided for in the Specifications and Advertisement. I (We) also propose to execute the attached contract bond (Section 903) in an amount not less than one hundred (100) percent of the total of my (our) part, but also to guarantee the excellence of both workmanship and materials until the work is finally accepted.

I (We) enclose a certified check, cashier's check or bid bond for **five percent (5%) of total bid** and hereby agree that in case of my (our) failure to execute the contract and furnish bond within Ten (10) days after notice of award, the amount of this check (bid bond) will be forfeited to the State of Mississippi as liquidated damages arising out of my (our) failure to execute the contract as proposed. It is understood that in case I am (we are) not awarded the work, the check will be returned as provided in the Specifications.

Respectfully Submitted,

DATE _____

_____
Contractor

BY _____
Signature

TITLE _____

ADDRESS _____

CITY, STATE, ZIP _____

PHONE _____

FAX _____

E-MAIL _____

(To be filled in if a corporation)

Our corporation is chartered under the Laws of the State of _____ and the names, titles and business addresses of the executives are as follows:

_____
President Address

_____
Secretary Address

_____
Treasurer Address

The following is my (our) itemized proposal.

SECTION 905

PROPOSAL (Sheet No. 2- 1)

THIS WORK CONSISTS OF DRIVING TIMBER PILING & PURCHASING AND DELIVERING MATERIALS REQUIRED TO CONSTRUCT LANDING RAMPS AND PARKING AREAS AT BAY ST. LOUIS AND HENDERSON POINT, KNOWN AS FEDERAL AID PROJECT NO. ER-0003-01(132)/104634306 & 307, IN THE COUNTIES OF HANCOCK & HARRISON, STATE OF MISSISSIPPI.

I (We) agree to complete the entire project within the specified contract time.

*** SPECIAL NOTICE TO BIDDERS ***

BIDS WILL NOT BE CONSIDERED UNLESS BOTH UNIT PRICES AND ITEM TOTALS ARE ENTERED

BIDS WILL NOT BE CONSIDERED UNLESS THE BID CERTIFICATE LOCATED AT THE END OF THE BID SHEETS IS SIGNED

BID SCHEDULE

REF. NO.	PAY ITEM NO.	ADJ. CODE	APPROX. QUANTITY	UNIT	DESCRIPTION	UNIT PRICE DOLLAR	UNIT PRICE CENT	ITEM TOTAL DOLLAR	ITEM TOTAL CENT
					DIRECT PAY ITEMS				
(10)	304-D	(GT)	4,312	Ton	Granular Material, Concrete Sand				
(20)	907-304-D	(GT)	1,724	Ton	Granular Material, Crushed Stone				
(30)	615-B	(S)	1,505	Linear Feet	Precast Concrete Median Barrier				
(40)	618-B		1	Square Feet	Additional Construction Signs	10	.0000	10	.00

REF. NO.	PAY ITEM NO.	ADJ. CODE	APPROX. QUANTITY	UNIT	DESCRIPTION	UNIT PRICE DOLLAR	UNIT PRICE CENT	ITEM TOTAL DOLLAR	ITEM TOTAL CENT
(50)	802-A	(S)	8,000	Square Feet	Permanent Steel Sheet Piling				
(60)	815-A	(S)	5,970	Ton	Loose Riprap, Size 100				
(70)	815-A	(S)	10,848	Ton	Loose Riprap, Size 300				
(75)	820-B	(S)	1	Thousand Board	Treated Timber				
(80)	820-D	(S)	1,440	Linear Feet	Treated Timber Piling				
(85)	820-D	(S)	2,000	Linear Feet	Treated Timber Piling				

SUBTOTAL - DIRECT PAY ITEMS.....$_____

REF. NO.	PAY ITEM NO.	ADJ. CODE	APPROX. QUANTITY	UNIT	DESCRIPTION	UNIT PRICE DOLLAR	UNIT PRICE CENT	ITEM TOTAL DOLLAR	ITEM TOTAL CENT
					DEPENDENT PAY ITEMS				
(90)	620-A			Lump Sum	Mobilization	XXXXXXXXXXX	XXXX		
						XXXXXXXXXXX	XXXX		
						XXXXXXXXXXX	XXXX		
						XXXXXXXXXXX	XXXX		

SUBTOTAL - DEPENDENT ITEMS.....$_____

TOTAL BID - DIRECT AND DEPENDENT ITEMS.....$_____

COMPLETE ITEM NOS. 1, 2, AND/OR 3 AS APPROPRIATE. SEE NOTICE TO BIDDERS NO.696 AND SUPPLEMENT.

1. I/We agree that no less than percent shall be expended with small business concerns owned and controlled by socially and economically disadvantaged individuals (DBE and WBE).

2. Classification of Bidder: Small Business (DBE)_____ Small Business (WBE)_____

3. A joint venture with a Small Business (DBE/WBE): YES _____

*** SIGNATURE STATEMENT ***

BIDDER ACKNOWLEDGES THAT HE/SHE HAS CHECKED ALL ITEMS IN THIS PROPOSAL FOR ACCURACY AND CERTIFIED THAT THE FIGURES SHOWN THEREIN CONSTITUTE THEIR OFFICIAL BID.

_____
BIDDER'S SIGNATURE

CONDITIONS FOR COMBINATION BID

If a bidder elects to submit a combined bid for two or more of the contracts listed for this month's letting, the bidder must complete and execute these sheets of the proposal in each of the individual proposals to constitute a combination bid. In addition to this requirement, each individual contract shall be completed, executed and submitted in the usual specified manner.

Failure to execute this Combination Bid Proposal in each of the contracts combined will be just cause for each proposal to be received and evaluated as a separate bid.

* * * *

SECTION 905 - COMBINATION BID PROPOSAL (Continued)

Project Number	Pay Item Number	Unit	Unit Price Reduction	Total Item Reduction	Total Contract Reduction
1. _____	_____ _____	_____ _____	_____ _____	_____ _____	
2. _____	_____ _____	_____ _____	_____ _____	_____ _____	
3. _____	_____ _____	_____ _____	_____ _____	_____ _____	
4. _____	_____ _____	_____ _____	_____ _____	_____ _____	
5. _____	_____ _____	_____ _____	_____ _____	_____ _____	
6. _____	_____ _____	_____ _____	_____ _____	_____ _____	
7. _____	_____ _____	_____ _____	_____ _____	_____ _____	
8. _____	_____ _____	_____ _____	_____ _____	_____ _____	

Project Number	Pay Item Number	Unit	Unit Price Reduction	Total Item Reduction	Total Contract Reduction
9. _____	_____ _____	_____ _____	_____ _____	_____ _____	
10. _____	_____ _____	_____ _____	_____ _____	_____ _____	

C. If option (c) has been selected, then initial and complete one of the following, go to II. and sign Combination Bid Proposal.

_____ I (We) desire to be awarded work not to exceed a total monetary value of $ _____.

_____ I (We) desire to be awarded work not to exceed _____ number of contracts.

II. It is understood that the Mississippi Transportation Commission not only reserves the right to reject any and all proposals, but also the right to award contracts upon the basis of lowest separate bids or combination bids most advantageous to the State.

It is further understood and agreed that the Combination Bid Proposal is for comparison of bids only and that each contract shall operate in every respect as a separate contract in accordance with its proposal and contract documents.

I (We), the undersigned, agree to complete each contract on or before its specified completion date.

SIGNED _____

_____

_____

Certification with regard to the Performance of Previous Contracts or Subcontracts subject to the Equal Opportunity Clause and the filing of Required Reports

The Bidder ____, proposed Subcontractor ____, hereby certifies that he has ____, has not ____, participated in a previous contract or subcontract subject to the Equal Opportunity Clause, as required by Executive Orders 10925, 11114, or 11246, and that he has ____, has not ____, filed with the Joint Reporting Committee, the Director of the Office of Federal Contract Compliance, a Federal Government contracting or administering agency, or the former President's Committee on Equal Employment Opportunity, all reports due under the applicable filing requirements.

_____
(COMPANY)

BY _____

_____
(TITLE)

DATE: _____

NOTE: The above certification is required by the Equal Employment Opportunity Regulations of the Secretary of Labor (41 CFR 60-1.7 (b) (1)), and must be submitted by bidders and proposed subcontractors only in connection with contracts and subcontracts which are subject to the Equal Opportunity Clause. Contracts and Subcontracts which are exempt from the Equal Opportunity Clause are set forth in 41 CFR 60-1.5. (Generally only contracts or subcontracts of $10,000 or under are exempt.)

Currently, Standard Form 100 (EEO-1) is the only report required by the Executive Orders or their implementing regulations.

Proposed prime Contractors and Subcontractors who have participated in a previous contract or subcontract subject to the Executive orders and have not filed the required reports should note that 41 CFR 60-1.7 (b) (1) prevents the award of contracts and subcontracts unless such Contractors submit a report covering the delinquent period or such other period specified by the Federal Highway Administration or by the Director, Office of Federal Contract Compliance, U. S. Department of Labor.

MISSISSIPPI DEPARTMENT OF TRANSPORTATION

CERTIFICATION
(Execute in duplicate)

State of Mississippi

County of _____

I, _____,
(Name of person signing certification)

individually, and in my capacity as _____ of
(Title)

_____ do hereby certify under
(Name of Firm, Partnership, or Corporation)

penalty of perjury under the laws of the United States and the State of Mississippi that _____

_____, Bidder
(Name of Firm, Partnership, or Corporation)

on Project No. **ER-0003-01(132) / 104634306 & 307**,

in **Hancock & Harrison** County(ies), Mississippi, has not either

directly or indirectly entered into any agreement, participated in any collusion; or otherwise taken any action in restraint of free competitive bidding in connection with this contract; nor have any of its corporate officers or principal owners.

Except as noted hereafter, it is further certified that said legal entity and its corporate officers, principal owners, managers, auditors and others in a position of administering federal funds:

a) Are not presently debarred, suspended, proposed for debarment, declared ineligible, or voluntarily excluded from covered transactions by any Federal department or agency;

b) Have not within a three-year period preceding this proposal been convicted of or had a civil judgment rendered against them for commission of fraud or a criminal offense in connection with obtaining, attempting to obtain, or performing a public (Federal, State or local) transaction or contract under a public transaction; violation of Federal or State antitrust statutes or commission of embezzlement, theft, forgery, bribery, falsification or destruction of records, making false statements, or receiving stolen property;

c) Are not presently indicted for or otherwise criminally or civilly charged by a governmental entity (Federal, State or local) with commission of any of the offenses enumerated in (b) above; and

d) Have not within a three-year period preceding this application/ proposal had one or more public transactions (Federal, State or local) terminated for cause or default.

Initial here "_____" if exceptions are attached and made a part thereof. Any exceptions shall address to whom it applies, initiating agency and dates of such action.

Note: Exceptions will not necessarily result in denial of award but will be considered in determining bidder responsibility. Providing false information may result in criminal prosecution or administrative sanctions.

The bidder further certifies that the certification requirements contained in Section XI of Form FHWA 1273, will be or have been included in all subcontracts, material supply agreements, purchase orders, etc. except those procurement contracts for goods or services that are expected to be less than the Federal procurement small purchase threshold fixed at 10 U.S.C. 2304(g) and 41 U.S.C. 253(g) (currently $25,000) which are excluded from the certification requirements.

The bidder further certifies, to the best of his or her knowledge and belief, that:

1) No Federal appropriated funds have been paid or will be paid to any person for influencing or attempting to influence an officer or employee of any Federal agency, a Member of Congress, an officer or employee of Congress, or an employee of a Member of Congress in connection with the awarding of any Federal contract, the making of any Federal grant, the making of any Federal loan, the entering into of any cooperative agreement, and the extension, continuation, renewal, amendment, or modification of any Federal contract, grant, loan, or cooperative agreement.

2) If any funds other than Federal appropriated funds have been paid or will be paid to any person for influencing or attempting to influence an officer or employee of any Federal agency, a Member of Congress, an officer or employee of Congress, or an employee of a Member of Congress in connection with this contract, Standard Form-LLL, "Disclosure Form to Report Lobbying," in accordance with its instructions will be completed and submitted.

The certification contained in (1) and (2) above is a material representation of fact upon which reliance is placed and a prerequisite imposed by Section 1352, Title 31, U.S. Code prior to entering into this contract. Failure to comply shall be subject to a civil penalty of not less than $10,000 and not more than $100,000. The bidder shall include the language of the certification in all subcontracts exceeding $100,000 and all subcontractors shall certify and disclose accordingly.

All of the foregoing and attachments (when indicated) is true and correct.

Executed on _____ _____

Signature

(11/23/92F)

MISSISSIPPI DEPARTMENT OF TRANSPORTATION

CERTIFICATION
(Execute in duplicate)

State of Mississippi

County of _____

I, _____,
(Name of person signing certification)

individually, and in my capacity as _____ of
(Title)

_____ do hereby certify under
(Name of Firm, Partnership, or Corporation)

penalty of perjury under the laws of the United States and the State of Mississippi that _____

_____, Bidder
(Name of Firm, Partnership, or Corporation)

on Project No. **ER-0003-01(132) / 104634306 & 307**,

in **Hancock & Harrison** County(ies), Mississippi, has not either

directly or indirectly entered into any agreement, participated in any collusion; or otherwise taken any action in restraint of free competitive bidding in connection with this contract; nor have any of its corporate officers or principal owners.

Except as noted hereafter, it is further certified that said legal entity and its corporate officers, principal owners, managers, auditors and others in a position of administering federal funds:

e) Are not presently debarred, suspended, proposed for debarment, declared ineligible, or voluntarily excluded from covered transactions by any Federal department or agency;

f) Have not within a three-year period preceding this proposal been convicted of or had a civil judgment rendered against them for commission of fraud or a criminal offense in connection with obtaining, attempting to obtain, or performing a public (Federal, State or local) transaction or contract under a public transaction; violation of Federal or State antitrust statutes or commission of embezzlement, theft, forgery, bribery, falsification or destruction of records, making false statements, or receiving stolen property;

g) Are not presently indicted for or otherwise criminally or civilly charged by a governmental entity (Federal, State or local) with commission of any of the offenses enumerated in (b) above; and

h) Have not within a three-year period preceding this application/ proposal had one or more public transactions (Federal, State or local) terminated for cause or default.

Initial here "_____" if exceptions are attached and made a part thereof. Any exceptions shall address to whom it applies, initiating agency and dates of such action.

Note: Exceptions will not necessarily result in denial of award but will be considered in determining bidder responsibility. Providing false information may result in criminal prosecution or administrative sanctions.

The bidder further certifies that the certification requirements contained in Section XI of Form FHWA 1273, will be or have been included in all subcontracts, material supply agreements, purchase orders, etc. except those procurement contracts for goods or services that are expected to be less than the Federal procurement small purchase threshold fixed at 10 U.S.C. 2304(g) and 41 U.S.C. 253(g) (currently $25,000) which are excluded from the certification requirements.

The bidder further certifies, to the best of his or her knowledge and belief, that:

3) No Federal appropriated funds have been paid or will be paid to any person for influencing or attempting to influence an officer or employee of any Federal agency, a Member of Congress, an officer or employee of Congress, or an employee of a Member of Congress in connection with the awarding of any Federal contract, the making of any Federal grant, the making of any Federal loan, the entering into of any cooperative agreement, and the extension, continuation, renewal, amendment, or modification of any Federal contract, grant, loan, or cooperative agreement.

4) If any funds other than Federal appropriated funds have been paid or will be paid to any person for influencing or attempting to influence an officer or employee of any Federal agency, a Member of Congress, an officer or employee of Congress, or an employee of a Member of Congress in connection with this contract, Standard Form-LLL, "Disclosure Form to Report Lobbying," in accordance with its instructions will be completed and submitted.

The certification contained in (1) and (2) above is a material representation of fact upon which reliance is placed and a prerequisite imposed by Section 1352, Title 31, U.S. Code prior to entering into this contract. Failure to comply shall be subject to a civil penalty of not less than $10,000 and not more than $100,000. The bidder shall include the language of the certification in all subcontracts exceeding $100,000 and all subcontractors shall certify and disclose accordingly.

All of the foregoing and attachments (when indicated) is true and correct.

Executed on _____ _____

Signature

(11/23/92F)

S E C T I O N 9 0 2

CONTRACT FOR **ER-0003-01(132) / 104634306 & 307**

LOCATED IN THE COUNTY(IES) OF **Hancock & Harrison**

STATE OF MISSISSIPPI,

COUNTY OF HINDS

This contract entered into by and between the Mississippi Transportation Commission on one hand, and the undersigned contractor, on the other witnesseth;

That, in consideration of the payment by the Mississippi Transportation Commission of the prices set out in the proposal hereto attached, to the undersigned contractor, such payment to be made in the manner and at the time of times specified in the specifications and the special provisions, if any, the undersigned contractor hereby agrees to accept the prices stated in the proposal in full compensation for the furnishing of all materials and equipment and the executing of all the work contemplated in this contract.

It is understood and agreed that the advertising according to law, the Advertisement, the instructions to bidders, the proposal for the contract, the specifications, the revisions of the specifications, the special provisions, and also the plans for the work herein contemplated, said plans showing more particularly the details of the work to be done, shall be held to be, and are hereby made a part of this contract by specific reference thereto and with like effect as if each and all of said instruments had been set out fully herein in words and figures.

It is further agreed that for the same consideration the undersigned contractor shall be responsible for all loss or damage arising out of the nature of the work aforesaid; or from the action of the elements and unforeseen obstructions or difficulties which may be encountered in the prosecution of the same and for all risks of every description connected with the work, exceptions being those specifically set out in the contract; and for faithfully completing the whole work in good and workmanlike manner according to the approved Plans, Specifications, Special Provisions, Notice(s) to Bidders and requirements of the Mississippi Department of Transportation.

It is further agreed that the work shall be done under the direct supervision and to the complete satisfaction of the Executive Director of the Mississippi Department of Transportation, or his authorized representatives, and when Federal Funds are involved subject to inspection at all times and approval by the Federal Highway Administration, or its agents as the case may be, or the agents of any other Agency whose funds are involved in accordance with those Acts of the Legislature of the State of Mississippi approved by the Governor and such rules and regulations issued pursuant thereto by the Mississippi Transportation Commission and the authorized Federal Agencies.

The Contractor agrees that all labor as outlined in the Special Provisions may be secured from list furnished by

It is agreed and understood that each and every provision of law and clause required by law to be inserted in this contract shall be deemed to be inserted herein and this contract shall be read and enforced as though it were included herein, and, if through mere mistake or otherwise any such provision is not inserted, then upon the application of either party hereto, the contract shall forthwith be physically amended to make such insertion.

The Contractor agrees that he has read each and every clause of this Contract, and fully understands the meaning of same and that he will comply with all the terms, covenants and agreements therein set forth.

Witness our signatures this the _____ day of _____, _____.

_____

Contractor (s)

By _____

MISSISSIPPI TRANSPORTATION COMMISSION

Title _____

By _____

Executive Director

Signed and sealed in the presence of:
(names and addresses of witnesses)

_____

_____

Secretary to the Commission

Award authorized by the Mississippi Transportation Commission in session on the ____ day of _____, _____, Minute Book No. _____, Page No. _____.

Revised 8/06/2003

S E C T I O N 9 0 3

CONTRACT BOND FOR: **ER-0003-01(132) / 104634306 & 307**

LOCATED IN THE COUNTY(IES) OF: **Hancock & Harrison**

STATE OF MISSISSIPPI,

COUNTY OF HINDS

Know all men by these presents: that we, _____

_____ Principal, a _____

residing at _____ in the State of _____

and _____

residing at _____ in the State of _____,

authorized to do business in the State of Mississippi, under the laws thereof, as surety, are held and firmly bound unto the State of Mississippi in the sum of _____

_____

($_____) Dollars, lawful money of the United States of America, to be paid to it for which payment well and truly to be made, we bind ourselves, our heirs, administrators, successors, or assigns jointly and severally by these presents.

Signed and sealed this the _____ day of _____ A.D. _____.

The conditions of this bond are such, that whereas the said _____

_____

principal, has (have) entered into a contract with the Mississippi Transportation Commission, bearing the date of _____ day of _____ A.D. _____ hereto annexed, for the construction of certain projects(s) in the State of Mississippi as mentioned in said contract in accordance with the Contract Documents therefor, on file in the offices of the Mississippi Department of Transportation, Jackson, Mississippi.

Now therefore, if the above bounden _____

_____ in all things shall stand to and abide by and well and truly observe, do keep and perform all and singular the terms, covenants, conditions, guarantees and agreements in said contract, contained on his (their) part to be observed, done, kept and performed and each of them, at the time and in the manner and form and furnish all of the material and equipment specified in said contract in strict accordance with the terms of said contract which said plans, specifications and special provisions are included in and form a part of said contract and shall maintain the said work contemplated until its final completion and acceptance as specified in Subsection 109.11 of the approved specifications, and save harmless said Mississippi Transportation Commission from any loss or damage arising out of or occasioned by the negligence, wrongful or criminal act, overcharge, fraud, or any other loss or damage whatsoever, on the part of said principal (s), his (their) agents, servants, or employees in the performance of said work or in any manner connected therewith, and shall be liable and responsible in a civil action instituted by the State at the instance of the Mississippi Transportation Commission or any officer of the State authorized in such cases, for double any amount in money or property, the State may lose or be overcharged or otherwise defrauded of, by reason of wrongful or criminal act, if any, of the Contractor(s), his (their) agents or

employees, and shall promptly pay the said agents, servants and employees and all persons furnishing labor, material, equipment or supplies therefor, including premiums incurred, for Surety Bonds, Liability Insurance, and Workmen's Compensation Insurance; with the additional obligation that such Contractor shall promptly make payment of all taxes, licenses, assessments, contributions, damages, any liquidated damages which may arise prior to any termination of said principal's contract, any liquidated damages which may arise after termination of the said principal's contract due to default on the part of said principal, penalties and interest thereon, when and as the same may be due this state, or any county, municipality, board, department, commission or political subdivision: in the course of the performance of said work and in accordance with Sections 31-5-51 et seq. Mississippi Code of 1972, and other State statutes applicable thereto, and shall carry out to the letter and to the satisfaction of the Executive Director of the Mississippi Department of Transportation, all, each and every one of the stipulations, obligations, conditions, covenants and agreements and terms of said contract in accordance with the terms thereof and all of the expense and cost and attorney's fee that may be incurred in the enforcement of the performance of said contract, or in the enforcement of the conditions and obligations of this bond, then this obligation shall be null and void, otherwise to be and remain in full force and virtue.

Witness our signatures and seals this the _____ day of _____ A.D. _____.

_____	_____
(Contractors) Principal	Surety
By _____	By _____
	(Signature) Attorney in Fact
	_____
Title _____	_____
(Contractor's Seal)	(Name and Address of Local (Mississippi) Representative)
	(Surety Seal)

OCR-481

REV. 10/11/01

MISSISSIPPI DEPARTMENT OF TRANSPORTATION

OFFICE OF CIVIL RIGHTS

JACKSON, MISSISSIPPI

DISADVANTAGED BUSINESS ENTERPRISE LIST

PROJECT NUMBER: _____ COUNTY: _____

NAME OF DBE FIRM: _____ ☐ RACE CONSCIOUS ☐ RACE NEUTRAL

ADDRESS: _____

A	B	C
REFERENCE NUMBER OF ITEMS	PER CENT WORK SUBCONTRACTED, (SEE NOTE 4 & 5 BELOW)	VALUE OF ITEM (SUBCONTRACTED, MANUFACTURED OR SUPPLIED)
TOTAL		
PERCENT OF TOTAL BID		

*** I ACKNOWLEDGE AND COMMIT TO THE ITEMS AND PRICES STATED ABOVE ***

_____ _____

SIGNATURE OF DBE SIGNATURE OF PRIME

RECEIVED BY MDOT: _____ _____

PRIME CONTRACTOR

DATE APPROVED BY MDOT: _____ _____

SUBMITTED BY

APPROVED BY: _____ _____

TITLE

I AGREE TO SUBCONTRACT OR PURCHASE MATERIAL FROM THE DBE FIRM LIST ABOVE AND I MAKE THIS COMMITMENT WITH THE UNDERSTANDING THAT IF I FAIL FOR GOOD REASON TO FULFILL THIS COMMITMENT I HAVE LISTED I WILL FULFILL THE TERMS OF MY CONTRACT AS LONG AS I REACH OR EXCEED THE CONTRACT GOAL OF _____%.

INSTRUCTIONS

1. SUBMIT THIS FORM TO CONTRACT ADMINISTRATION DIVISION NO LATER THAN THE TENTH CALENDAR DAY AFTER THE OPENING OF THE BIDS.
2. 60% CREDIT IS ALLOWED TOWARD THE DBE GOAL FOR SUPPLIERS.
3. THE ACTUAL SUBCONTRACT AGREEMENT MUST EQUAL OR EXCEED THE DOLLAR AMOUNT SHOWN IN COLUMN “C”.
4. IF THE DBE FIRM PERFORMS “ALL OF THE WORK” PERTAINING TO A SUBCONTRACTED ITEM ENTER 100% IN COLUMN “B”.
5. IF THE DBE FIRM PERFORMS “A PORTION OF THE WORK” PERTAINING TO A SUBCONTRACTED ITEM THE PERCENTAGE IS CALCULATED BASED ON THE THE TOTAL VALUE OF THE ITEM AND ENTERED IN COLUMN “B”. A BREAKDOWN OF THE COST MUST ACCOMPANY THIS SITUATION.

OCR-481

REV. 10/11/01

MISSISSIPPI DEPARTMENT OF TRANSPORTATION

OFFICE OF CIVIL RIGHTS

JACKSON, MISSISSIPPI

DISADVANTAGED BUSINESS ENTERPRISE LIST

PROJECT NUMBER: _____ COUNTY: _____

NAME OF DBE FIRM: _____ ☐ RACE CONSCIOUS ☐ RACE NEUTRAL

ADDRESS: _____

A	B	C
REFERENCE NUMBER OF ITEMS	PER CENT WORK SUBCONTRACTED, (SEE NOTE 4 & 5 BELOW)	VALUE OF ITEM (SUBCONTRACTED, MANUFACTURED OR SUPPLIED)
TOTAL		
PERCENT OF TOTAL BID		

*** I ACKNOWLEDGE AND COMMIT TO THE ITEMS AND PRICES STATED ABOVE ***

_____ _____

SIGNATURE OF DBE SIGNATURE OF PRIME

RECEIVED BY MDOT: _____ _____

PRIME CONTRACTOR

DATE APPROVED BY MDOT: _____ _____

SUBMITTED BY

APPROVED BY: _____ _____

TITLE

I AGREE TO SUBCONTRACT OR PURCHASE MATERIAL FROM THE DBE FIRM LIST ABOVE AND I MAKE THIS COMMITMENT WITH THE UNDERSTANDING THAT IF I FAIL FOR GOOD REASON TO FULFILL THIS COMMITMENT I HAVE LISTED I WILL FULFILL THE TERMS OF MY CONTRACT AS LONG AS I REACH OR EXCEED THE CONTRACT GOAL OF _____%.

INSTRUCTIONS

1. SUBMIT THIS FORM TO CONTRACT ADMINISTRATION DIVISION NO LATER THAN THE TENTH CALENDAR DAY AFTER THE OPENING OF THE BIDS.
2. 60% CREDIT IS ALLOWED TOWARD THE DBE GOAL FOR SUPPLIERS.
3. THE ACTUAL SUBCONTRACT AGREEMENT MUST EQUAL OR EXCEED THE DOLLAR AMOUNT SHOWN IN COLUMN “C”.
4. IF THE DBE FIRM PERFORMS “ALL OF THE WORK” PERTAINING TO A SUBCONTRACTED ITEM ENTER 100% IN COLUMN “B”.
5. IF THE DBE FIRM PERFORMS “A PORTION OF THE WORK” PERTAINING TO A SUBCONTRACTED ITEM THE PERCENTAGE IS CALCULATED BASED ON THE THE TOTAL VALUE OF THE ITEM AND ENTERED IN COLUMN “B”. A BREAKDOWN OF THE COST MUST ACCOMPANY THIS SITUATION.

OCR-485
REV. 10/02

MISSISSIPPI DEPARTMENT OF TRANSPORTATION
OFFICE OF CIVIL RIGHTS
JACKSON, MISSISSIPPI

LIST OF FIRMS SUBMITTING QUOTES

I/we received quotes from the following firms on Project No: **ER-0003-01(132) / 104634306 & 307**

County: **Hancock & Harrison**

Disadvantaged Business Enterprise (DBE) Regulations as stated in 49 CFR 26.11 require the Mississippi Department of Transportation (MDOT) to create and maintain a comprehensive list of all firms quoting/bidding subcontracts on prime contracts and quoting/bidding subcontracts on federally-funded transportation projects. For every firm, we require the following information:

Firm Name: _____
Contact Name/Title: _____
Firm Mailing Address _____
Phone Number: _____
_____ DBE Firm _____ Non-DBE Firm

Firm Name: _____
Contact Name/Title: _____
Firm Mailing Address _____
Phone Number: _____
_____ DBE Firm _____ Non-DBE Firm

Firm Name: _____
Contact Name/Title: _____
Firm Mailing Address _____
Phone Number: _____
_____ DBE Firm _____ Non-DBE Firm

Firm Name: _____
Contact Name/Title: _____
Firm Mailing Address _____
Phone Number: _____
_____ DBE Firm _____ Non-DBE Firm

Firm Name: _____
Contact Name/Title: _____
Firm Mailing Address _____
Phone Number: _____
_____ DBE Firm _____ Non-DBE Firm

_____
SUBMITTED BY (Signature)

_____
FIRM NAME

Submit this form to Contract Administration as a part of your bid package. If this form is not included as part of the bid packet, your bid will be deemed irregular. For further information about this form, call Mississippi DOT's Office of Civil Rights at (601) 359-7466; FAX (601) 576-4504. Please make copies of this form when needed and also add those copies to the bid package.

MISSISSIPPI DEPARTMENT OF TRANSPORTATION

HAUL PERMIT FOR BRIDGES

WITH

POSTED WEIGHT LIMITS

DATE: _____

PROJECT: ER-0003-01(132) / 104634306 & 307

COUNTIES: Hancock & Harrison

LOCATION: This work consists of driving timber piling & purchasing and delivering materials required to construct landing ramps and parking areas at Bay St. Louis and Henderson Point.

A permit is issued to _____ for transporting loads exceeding the posted limit for any such bridge located on State designated routes within the project termini provided that such transport vehicles comply with all other governing statutory weight limits.

This permit is valid on all State designated routes from the point of origin to the point of delivery for materials and equipment utilized in construction of said project and also valid for sub-contractors and vendors upon written permission of the Contractor. The permit is non-transferable and no other haul permit for posted bridges will be issued to other individuals, vendors, or companies for construction of this project.

A copy of this signed permit shall be carried in all vehicles operating under the authority of this permit and also a copy of the Contractor's written permission when the vehicle is other than Contractor owned.

In accordance with State law, the above named Contractor will be liable for damages directly attributable to vehicles operating under this permit.

_____

EXECUTIVE DIRECTOR