FED. ROAD REG. NO.	STATE	PROJECT NO.	SHEET NO.
4	MISS.	STP-2920-00(001)	1

STATE OF MISSISSIPPI

MISSISSIPPI DEPARTMENT OF TRANSPORTATION

PLAN AND PROFILE OF PROPOSED STATE HIGHWAY FEDERAL AID PROJECT NO. STP-2920-00(001)

U.S. 51 BETWEEN
SENATOBIA AND COLDWATER
TATE COUNTY

① 03-13-09

FMS NO.: 100285 / 301000

RATIOS / SCALES

PLAN		1:1000
PROFILE	HOR.	1:1000
	VERT.	1:100
LAYOUT		1:400

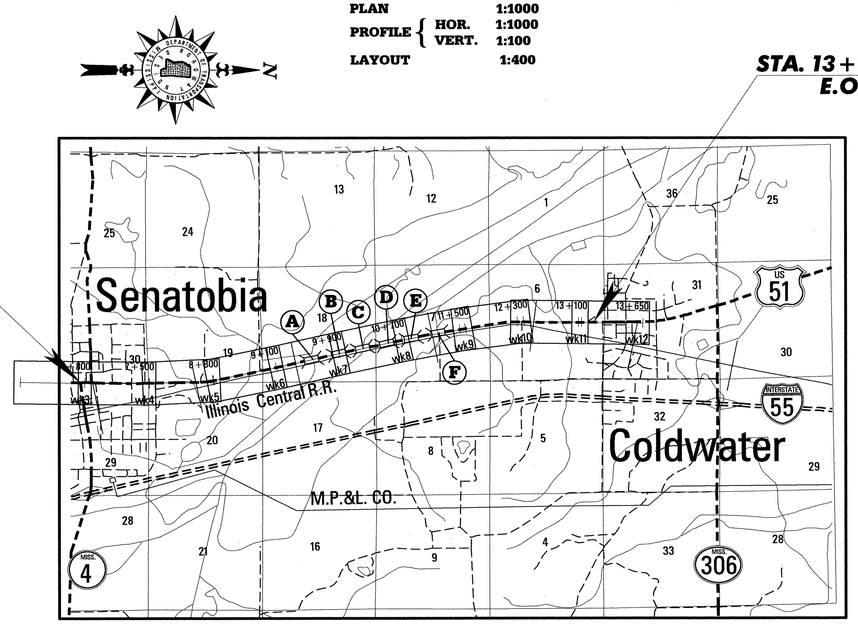

BRIDGE STRUCTURES REQ'D.

(A) STA. 9+371.755 LT. LN.
BRIDGE #273.2 (RELIEF)
6@12 m SPANS REQ'D.
LENGTH ALONG C.L. = 72.490 m

(B) STA. 9+856.755 LT. LN.
BRIDGE #273.5 (RELIEF)
7@12 m SPANS REQ'D.
LENGTH ALONG C.L. = 84.490 m

(C) STA. 10+052.645 LT. LN.
BRIDGE #273.7 HICKAHALA CREEK
3@30 m SPANS REQ'D.
LENGTH ALONG C.L. = 90.710 m

(D) STA. 10+471.755 LT. LN.
BRIDGE #273.9 (RELIEF)
3@12 m SPANS REQ'D.
LENGTH ALONG C.L. = 36.490 m

(E) STA. 10+693.755 LT. LN.
BRIDGE #274.1 (RELIEF)
5@12 m SPANS REQ'D.
LENGTH ALONG C.L. = 60.490 m

(F) STA. 10+909.755 LT. LN.
BRIDGE #274.2 (RELIEF)
8@12 m SPANS REQ'D.
LENGTH ALONG C.L. = 96.490 m

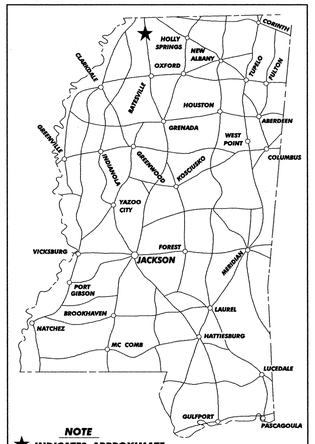

NOTE
★ INDICATES APPROXIMATE LOCATION OF PROJECT.

DESIGN CONTROL
60/90 km/h = V (SPEED DESIGN)
ADT (2001) = 13,450 ADT (2021) = 23,500
DHV = 2,100 : D = 50 % T = 5 %

PERMITS ACQUIRED BY MDOT

WETLANDS AND WATERS PERMITS (NECESSARY FOR ULTIMATE IMPROVEMENTS ONLY):

	WATERS	WETLANDS
NATIONWIDE #14	Y	N
NATIONWIDE (OTHER)*	N	N
GENERAL*	N	N
INDIVIDUAL (404)*	Y	Y

* ACQUISITION OF PERMITS FOR TEMPORARY IMPACTS DURING CONSTRUCTION ARE THE RESPONSIBILITY OF THE CONTRACTOR

STORMWATER PERMIT [Y]

Y	REQUIRED, CNOI SUBMITTED BY MDOT (DISTRIBUTED AREA = 5 ACRES +)(NTB 840M)
S	REQUIRED, SCNOI TO BE SUBMITTED BY CONTRACTOR (1 TO 4.99 ACRES)(NTB 839M)
N	NO STORMWATER PERMIT REQUIRED (<1 ACRE)

APPROVED BY: CKP DATE: 3/11/09

REVISIONS

CONVENTIONAL SYMBOLS

COUNTY LINE
TOWN CORPORATION LINE
SECTION LINE
EXISTING ROAD OR TRAVELED WAY
PROPOSED ROAD OR TRAVELED WAY
RAILROAD
SURVEY LINE
BRIDGES

EQUATIONS

NONE

EXCEPTIONS

NONE

LENGTH DATA

(MEASURED FROM ℄ SURVEY)

LENGTH OF ROADWAY	6586.00 m
LENGTH OF BRIDGES	441.16 m
LENGTH OF PROJECT (NET)	7027.16 m
LENGTH OF EXCEPTIONS	0.00 m
LENGTH OF PROJECT (GROSS)	7027.16 m

DEPARTMENT OF TRANSPORTATION MISSISSIPPI METRIC

101

DATE	REVISIONS	BY

APPROVED:
CHIEF ENGINEER — DATE 3.12.09
EXECUTIVE DIRECTOR — DATE 3/12/09
MISSISSIPPI DEPARTMENT OF TRANSPORTATION

APPROVED:
DIVISION ADMINISTRATOR — DATE
FEDERAL HIGHWAY ADMINISTRATION
DEPARTMENT OF TRANSPORTATION

LAYOUT SHEET

MAJOR COLLECTOR

STATE	PROJECT NO.
MISS.	STP-2920-00(001)

DESCRIPTION OF SHEET	WKG. NO.	SH. NO.
TITLE SHEET (1)		1
DETAILED INDEX & GENERAL NOTES (6)		
DETAILED INDEX	DI-1	2
DETAILED INDEX	DI-2	3
DETAILED INDEX	DI-3	4
DETAILED INDEX (BRIDGE)	DI-4	5
GENERAL NOTES	GN-1	6
GENERAL NOTES (TRAFFIC SIGNALS)	GN-2	7
TYPICAL SECTION SHEETS (9)		
TYPICAL SECTION - HWY. 51 MAINLINE (TWO-LANE TO FIVE-LANE TRANSITION) (B.O.P. TO STA. 6+767.00)	TS-1	8
TYPICAL SECTION - HWY. 51 MAINLINE (FIVE-LANE WITH SIDEWALK) (STA. 6+767.00 TO STA. 7+038.77) & (STA. 7+196.00 TO STA. 8+040.00) (SENATOBIA)	TS-2	9
TYPICAL SECTION - HWY. 51 MAINLINE (RIGHT TURN ONLY LANES) (STA. 7+038.77 TO STA. 7+196.00)	TS-3	10
TYPICAL SECTION - HWY. 51 MAINLINE (FIVE-LANE TO FOUR-LANE TRANSITION)	TS-4	11
TYPICAL SECTION - HWY. 51 MAINLINE (FIVE-LANE WITH SIDEWALK) (STA. 12+325.00 TO STA. 13+492.056) (COLDWATER)	TS-5	12
TYPICAL SECTION - HWY. 51 MAINLINE (TIE-IN TO EXIST. FOUR-LANE) (STA. 13+492.056 TO E.O.P.) (COLDWATER)	TS-6	13
TYPICAL SECTION - LOCAL ROAD STA. 7+116.738 LT. (WILSON DRIVE/QUALITY LANE)	TS-7	14
TYPICAL SECTION - LOCAL ROAD STA. 13+387.50 & CHANNELIZED INTERSECTIONS	TS-8	15
TYPICAL SECTION - TYPICAL OVER BOX EXTENSION (GRAEBER BROS.)	TS-9	16
QUANTITY SHEETS (29)		
SUMMARY OF QUANTITIES	SQ-1	17
SUMMARY OF QUANTITIES	SQ-2	18
SUMMARY OF QUANTITIES	SQ-3	19
SUMMARY OF QUANTITIES (RETAINING WALL)	SQ-4	20
SUMMARY OF QUANTITIES (BRIDGE)	SQ-5	21
SUMMARY OF QUANTITIES (TRAFFIC SIGNALS)	SQ-TS	22
ESTIMATED QUANTITIES (DRAINAGE STRUCTURES)	EQ-1	23
ESTIMATED QUANTITIES (DRAINAGE STRUCTURES)	EQ-2	24
ESTIMATED QUANTITIES (DRAINAGE STRUCTURES)	EQ-3	25
ESTIMATED QUANTITIES (DRAINAGE STRUCTURES)	EQ-4	26
ESTIMATED QUANTITIES (DRAINAGE STRUCTURES)	EQ-5	27
ESTIMATED QUANTITIES (DRAINAGE STRUCTURES)	EQ-6	28
ESTIMATED QUANTITIES (DRAINAGE STRUCTURES)	EQ-7	29
ESTIMATED QUANTITIES (MISC. REMOVAL ITEMS)	EQ-8	30
ESTIMATED QUANTITIES (REMOVAL OF CURB, FENCE, STRIPE, SIDEWALK, F.E.S., & PAVEMENT)	EQ-9	31
ESTIMATED QUANTITIES (EARTHWORK)	EQ-10	32
ESTIMATED QUANTITIES (JUNCTION BOXES)	EQ-11	33
ESTIMATED QUANTITIES (SIDE DRAINS & REMOVAL OF PIPE)	EQ-12	34
ESTIMATED QUANTITIES (BOX CULVERTS & CURB AND GUTTER)	EQ-13	35
ESTIMATED QUANTITIES (DRIVEWAY & HAY BALE QUANTITIES)	EQ-14	36
ESTIMATED QUANTITIES (EROSION CONTROL)	EQ-15	37
ESTIMATED QUANTITIES (TEMPORARY TRAFFIC STRIPE)	EQ-16	38
ESTIMATED QUANTITIES (PAVEMENT MARKINGS)	EQ-17	39
ESTIMATED BRIDGE QUANTITIES	EQ-18	40
ESTIMATED QUANTITIES FOR TRAFFIC CONTROL SIGNS	TCPQ-1	41
STANDARD ROADSIDE SIGN QUANTITIES	SRS-1A	42
STANDARD ROADSIDE SIGN QUANTITIES	SRS-1B	43
STANDARD ROADSIDE SIGN QUANTITIES	SRS-2	44
DIRECTIONAL SIGN QUANTITIES	DSQ-1A	45
PLAN & PROFILE SHEETS (21)		
MAIN FACILITY - B.O.P. TO STA. 6+800	3	46
MAIN FACILITY - STA. 6+800 TO STA. 7+500	4	47
LOCAL ROAD STA. 7+116.738 LT. (HWY. 4)	4A	48
MAIN FACILITY - STA. 7+500 TO STA. 8+300	5	49
TEMPORARY CONNECTION @ STA. 7+980	5A	50
MAIN FACILITY - STA. 8+300 TO STA. 9+100 - LEFT LANE	6-LT	51
MAIN FACILITY - STA. 8+300 TO STA. 9+100 - RIGHT LANE	6-RT	52
LOCAL ROAD STA. 8+638.536 LT.	6A	53
MAIN FACILITY - STA. 9+100 TO STA. 9+900 - LEFT LANE	7-LT	54
MAIN FACILITY - STA. 9+100 TO STA. 9+900 - RIGHT LANE	7-RT	55

DESCRIPTION OF SHEET	WKG. NO.	SH. NO.
PLAN & PROFILE SHEETS (CONT.)		
MAIN FACILITY - STA. 9+900 TO STA. 10+700 - LEFT LANE	8-LT	56
MAIN FACILITY - STA. 9+900 TO STA. 10+700 - RIGHT LANE	8-RT	57
MAIN FACILITY - STA. 10+700 TO STA. 11+500 - LEFT LANE	9-LT	58
MAIN FACILITY - STA. 10+700 TO STA. 11+500 - RIGHT LANE	9-RT	59
LOCAL ROAD STA. 11+260.826 RT.	9A	60
MAIN FACILITY - STA. 11+500 TO STA. 12+300 - LEFT LANE	10-LT	61
MAIN FACILITY - STA. 11+500 TO STA. 12+300 - RIGHT LANE	10-RT	62
TEMPORARY CONNECTION @ STA. 12+185	10A	63
MAIN FACILITY - STA. 12+300 TO STA. 13+100	11	64
MAIN FACILITY - STA. 13+100 TO E.O.P.	12	65
LOCAL ROAD STA. 13+387.500 LT.	12A	66
SPECIAL DESIGN SHEETS (90)		
DRAINAGE SHEET - STA. 6+625 TO STA. 6+825 (LEFT SIDE)	DR-1L	67
DRAINAGE SHEET - STA. 6+625 TO STA. 6+825 (RIGHT SIDE)	DR-1R	68
DRAINAGE SHEET - STA. 6+825 TO STA. 7+025 (LEFT SIDE)	DR-2L	69
DRAINAGE SHEET - STA. 6+825 TO STA. 7+025 (RIGHT SIDE)	DR-2R	70
DRAINAGE SHEET - STA. 7+025 TO STA. 7+225 (LEFT SIDE)	DR-3L	71
DRAINAGE SHEET - STA. 7+025 TO STA. 7+225 (RIGHT SIDE)	DR-3R	72
DRAINAGE SHEET - STA. 7+225 TO STA. 7+425 (LEFT SIDE)	DR-4L	73
DRAINAGE SHEET - STA. 7+225 TO STA. 7+425 (RIGHT SIDE)	DR-4R	74
DRAINAGE SHEET - STA. 7+425 TO STA. 7+625 (LEFT SIDE)	DR-5L	75
DRAINAGE SHEET - STA. 7+425 TO STA. 7+625 (RIGHT SIDE)	DR-5R	76
DRAINAGE SHEET - STA. 7+625 TO STA. 7+825 (LEFT SIDE)	DR-6L	77
DRAINAGE SHEET - STA. 7+625 TO STA. 7+825 (RIGHT SIDE)	DR-6R	78
DRAINAGE SHEET - STA. 7+825 TO STA. 8+025 (LEFT SIDE)	DR-7L	79
DRAINAGE SHEET - STA. 7+825 TO STA. 8+025 (RIGHT SIDE)	DR-7R	80
DRAINAGE SHEET - STA. 12+200 TO STA. 12+400 (LEFT SIDE)	DR-8L	81
DRAINAGE SHEET - STA. 12+200 TO STA. 12+400 (RIGHT SIDE)	DR-8R	82
DRAINAGE SHEET - STA. 12+400 TO STA. 12+600 (LEFT SIDE)	DR-9L	83
DRAINAGE SHEET - STA. 12+400 TO STA. 12+600 (RIGHT SIDE)	DR-9R	84
DRAINAGE SHEET - STA. 12+600 TO STA. 12+800 (LEFT SIDE)	DR-10L	85
DRAINAGE SHEET - STA. 12+600 TO STA. 12+800 (RIGHT SIDE)	DR-10R	86
DRAINAGE SHEET - STA. 12+800 TO STA. 13+000 (LEFT SIDE)	DR-11L	87
DRAINAGE SHEET - STA. 12+800 TO STA. 13+000 (RIGHT SIDE)	DR-11R	88
DRAINAGE SHEET - STA. 13+000 TO STA. 13+200 (LEFT SIDE)	DR-12L	89
DRAINAGE SHEET - STA. 13+000 TO STA. 13+200 (RIGHT SIDE)	DR-12R	90
DRAINAGE SHEET - STA. 13+200 TO STA. 13+400 (LEFT SIDE)	DR-13L	91
DRAINAGE SHEET - STA. 13+200 TO STA. 13+400 (RIGHT SIDE)	DR-13R	92
DRAINAGE SHEET - STA. 13+400 TO STA. 13+600 (LEFT SIDE)	DR-14L	93
DRAINAGE SHEET - STA. 13+400 TO STA. 13+600 (RIGHT SIDE)	DR-14R	94
DETAIL OF CONSTRUCTION SIGNING	DCS-1	95
TRAFFIC CONTROL PLAN - PHASE I (FIVE LANE SECTION)	TC-1	96
TRAFFIC CONTROL PLAN - TYPICAL DRUM LOCATIONS ENTERING CONSTRUCTION ZONE (PHASE I)	TC-2	97
TRAFFIC CONTROL PLAN - DETAIL OF CHANNELIZED INTERSECTION LOCAL ROAD STA. 8+638.536 AND STA. 11+260.826 (PHASE I)	TC-3	98
TRAFFIC CONTROL PLAN - DETAIL OF TURNOUT (PHASE I) LOCAL ROAD STA. 13+387.50	TC-4	99
TRAFFIC CONTROL PLAN - PHASE II (FIVE LANE SECTION)	TC-5	100
TRAFFIC CONTROL PLAN - TRANSITION FROM 5-LANE TO 2-LANE & 2-LANE TO 5-LANE (PHASE II)	TC-6	100.1
TRAFFIC CONTROL PLAN - DETAIL OF DRUM PLACEMENT (PHASE II) LOCAL ROAD STA. 13+387.50	TC-7	100.2
TRAFFIC CONTROL PLAN - DETAIL OF TURNOUT (PHASE II) LOCAL ROAD STA. 13+387.50	TC-8	100.3
TRAFFIC CONTROL PLAN - PHASE III & IV (FIVE-LANE SECTION)	TC-9	100.4
TRAFFIC CONTROL PLAN - DRUM PLACEMENT AND SHOULDER CLOSURE	TC-10	100.5

FMS CONSTR. NO.: 100285 / 301000

PS & E PLANS-DATE 03-13-09		
REVISIONS		
DATE	SHEET NO.	BY

R. SUTTERFIELD

/01

MISSISSIPPI DEPARTMENT OF TRANSPORTATION

DETAILED INDEX

HWY. 51

COUNTY: TATE
PROJ. NO.: STP-2920-00(001)

METRIC

WORKING NUMBER: DI-1

SHEET NUMBER: 2

FILENAME: DI.DGN

DESIGN TEAM SUTTERFIELD CHECKED _____ DATE _____

DATE | REVISION | BY

ROADWAY DESIGN PLAN
METRIC PLAN
MISSISSIPPI DEPARTMENT OF TRANSPORTATION
PROJECT DETAILED SECTION

STATE	PROJECT NO.
MISS.	STP-2920-00(001)

DESCRIPTION OF SHEET	WKG. NO.	SH. NO.
SPECIAL DESIGN SHEETS (CONT.)		
PAVEMENT MARKING DETAIL (STA. 6+622.840 TO STA. 6+850.00)	PMD-1	100.6
PAVEMENT MARKING DETAIL (STA. 6+850.00 TO STA. 7+025.00)	PMD-2	100.7
PAVEMENT MARKING DETAIL (STA. 7+025.00 TO STA. 7+250.00)	PMD-3	100.8
PAVEMENT MARKING DETAIL (LOCAL ROAD)	PMD-4	100.9
PAVEMENT MARKING DETAIL (STA. 7+250.00 TO STA. 7+700.00)	PMD-5	100.10
PAVEMENT MARKING DETAIL (STA. 7+700.00 TO BREAK LINE)	PMD-6	100.11
PAVEMENT MARKING DETAIL (BREAK LINE TO STA. 12+350.00)	PMD-7	100.12
PAVEMENT MARKING DETAIL (STA. 12+350.00 TO STA. 12+575.00)	PMD-8	100.13
PAVEMENT MARKING DETAIL (STA. 12+575.00 TO STA. 12+725.00 & STA. 12+755.00 TO STA. 12+900.00)	PMD-9	100.14
PAVEMENT MARKING DETAIL (STA. 12+900.00 TO STA. 13+100.00 & STA. 13+100.00 TO STA. 13+250.00)	PMD-10	100.15
PAVEMENT MARKING DETAIL (STA. 13+250.00 TO STA. 13+475.00)	PMD-11	100.16
PAVEMENT MARKING DETAIL (STA. 13+475.00 TO STA. 13+650.00)	PMD-12	100.17
TEMPORARY PAVEMENT MARKING DETAIL (PHASE I)	TPMD-1	100.18
TEMPORARY PAVEMENT MARKING DETAIL (PHASE II)	TPMD-2	100.19
TEMPORARY PAVEMENT MARKING DETAIL (PHASE II)	TPMD-3	100.20
TEMPORARY PAVEMENT MARKING DETAIL (PHASE II)	TPMD-4	100.21
TEMPORARY PAVEMENT MARKING DETAIL (PHASE II)	TPMD-5	100.22
TEMPORARY PAVEMENT MARKING DETAIL (PHASE III)	TPMD-6	100.23
TEMPORARY PAVEMENT MARKING DETAIL (PHASE III)	TPMD-7	100.24
TEMPORARY PAVEMENT MARKING DETAIL (PHASE III)	TPMD-8	100.25
TEMPORARY PAVEMENT MARKING DETAIL (PHASE III)	TPMD-9	100.26
TEMPORARY PAVEMENT MARKING DETAIL (PHASE III)	TPMD-10	100.27
TEMPORARY PAVEMENT MARKING DETAIL (PHASE III)	TPMD-11	100.28
TEMPORARY PAVEMENT MARKING DETAIL (PHASE III)	TPMD-12	100.29
TEMPORARY PAVEMENT MARKING DETAIL (PHASE III)	TPMD-13	100.30
TEMPORARY PAVEMENT MARKING DETAIL (PHASE III)	TPMD-14	100.31
TEMPORARY PAVEMENT MARKING DETAIL (PHASE III)	TPMD-15	100.32
TEMPORARY PAVEMENT MARKING DETAIL (PHASE III)	TPMD-16	100.33
TEMPORARY PAVEMENT MARKING DETAIL (PHASE III)	TPMD-17	100.34
INTERSECTION DETAIL (STA. 6+766.458)	ID-1	100.35
INTERSECTION DETAIL (STA. 6+990.342 & STA. 7+115.790 & STA. 7+116.738)	ID-2	100.36
INTERSECTION DETAIL (LOCAL ROAD STA. 7+116.738 - WILSON DRIVE (HWY. 4))	ID-3	100.37
INTERSECTION DETAIL (STA. 7+673.872)	ID-4	100.38
INTERSECTION DETAIL (STA. 8+638.536)	ID-5	100.39
INTERSECTION DETAIL (STA. 11+260.826)	ID-6	100.40
INTERSECTION DETAIL (STA. 13+387.50)	ID-7	100.41
MISCELLANEOUS DETAIL SHEET	MD-1	100.42
MISCELLANEOUS DETAIL SHEET	MD-2	100.43
MISCELLANEOUS DETAIL SHEET	MD-3	100.44
MISCELLANEOUS DETAIL SHEET (CROSSOVERS & LOCAL ROADS)	MD-4	100.45
VEGETATION SCHEDULE	VS-1	100.46
SPEED SIGN DETAIL	R16-3	100.47
RIGHT-OF-WAY MARKER	RW-1	100.48
SUPERELEVATION TRANSITION FOR LOCAL FACILITIES (V < 70 km/h)	SDSE-1	100.49
SUPERELEVATION TRANSITION - CASE I ROTATION ABOUT CENTERLINE (3.0% NORMAL SUBGRADE)	SE-2B	100.50
SUPERELEVATION TRANSITION - CASE II ROTATION ABOUT EDGE OF TRAVELED WAY (3.0% NORMAL SUBGRADE)	SE-2D	100.51
SUPERELEVATION TRANSITION ROTATION ABOUT CENTERLINE (URBAN FACILITY, V < 70 km/h)	SE-2G	100.52
RETAINING WALL	W-1	100.53
RETAINING WALL	W-2	100.54
RETAINING WALL	W-3	100.55
RETAINING WALL	W-4	100.56
PERMANENT SIGNING PLAN SHEETS (9)		
PERMANENT SIGNING PLAN (STA. 6+622.840 TO STA. 7+400)	PSP-1	100.57
PERMANENT SIGNING PLAN (STA. 7+400 TO STA. 8+100)	PSP-2	100.58
PERMANENT SIGNING PLAN (STA. 12+000 TO STA. 12+800)	PSP-3	100.59
PERMANENT SIGNING PLAN (STA. 12+800 TO STA. 13+625)	PSP-4	100.60
PERMANENT SIGNING DETAILS (STA. 6+762)	PSD-1	100.61
PERMANENT SIGNING DETAILS (STA. 6+990 TO STA. 7+673)	PSD-2	100.62
PERMANENT SIGNING DETAILS (STA. 7+115)	PSD-3	100.63
PERMANENT SIGNING DETAILS (STA. 13+387)	PSD-4	100.64
PERMANENT SIGNING DETAILS (SIGN DETAILS)	PSD-5	100.65

DESCRIPTION OF SHEET		WKG. NO.	SH. NO.
TRAFFIC SIGNAL PLANS (7)			
TRAFFIC SIGNAL INSTALLATION @ PORTER STREET		TSI-1	100.66
TRAFFIC SIGNAL INSTALLATION @ QUALITY LANE/WILSON DRIVE (MS 4)		TSI-2	100.67
DETAIL OF TRAFFIC SIGNAL HEADS, TRAFFIC SIGNAL SIGNS, AND GENERAL NOTES		TSD-1	100.68
LOOP DETECTOR DETAILS FOR TRAFFIC SIGNAL INSTALLATION		TSD-2	100.69
PULL BOX AND CONDUIT TRENCHING DETAILS FOR TRAFFIC SIGNAL INSTALLATION		TSD-3	100.70
TYPICAL DETAILS OF CONTROLLER CABINET MOUNTINGS, TYPE 1 POLL ATTACHMENTS & MISC. DETAILS		TSD-5	100.71
MAST ARM AND PEDESTAL POLE DETAILS FOR TRAFFIC SIGNAL INSTALLATION		TSD-6	100.72
STANDARD DRAWINGS - ROADWAY DESIGN SHEETS (62)(METRIC VERSION)			
PAVEMENT MARKING DETAILS FOR 2-LANE & 4-LANE DIVIDED ROADWAYS	(12-01-99)	PM-1	120
PAVEMENT MARKING DETAILS FOR 4-LANE & 5-LANE UNDIVIDED ROADWAYS	(12-01-99)	PM-2	121
PAVEMENT MARKING LEGEND DETAILS		PM-6	125
TYPICAL PLACEMENT OF WARNING SIGNS AND PAVEMENT MARKINGS AT RAILROAD HIGHWAY GRADE CROSSINGS		PM-7	126
4-LANE TO 2-LANE TRANSITION AT INTERCHANGE	(12-01-99)	PM-8	127
EROSION CONTROL		EC-1	140
TYPICAL TEMPORARY EROSION CONTROL MEASURES (SILT FENCE, HAY BALES, & BRUSH BARRIER)		TEC-1	142
TYPICAL TEMPORARY EROSION CONTROL MEASURES (SLOPE DRAIN, AND TYPE A SILT BASIN)		TEC-2	143
DETAILS OF TYPICAL DITCH TREATMENTS		DT-1	145
FENCE: CHAIN LINK CLASS II		CL-2	163
FENCE: TYPICAL INSTALLATION AT DITCH CROSSINGS AND FENCE ENDINGS		FI-3	166
GUARDRAIL: TYPICAL INSTALLATION AT BRIDGE APPROACHES FOR DIVIDED HIGHWAYS	(12-01-99)	GR-4	194
MEDIAN BARRIER: CONCRETE (PRECAST)		MB-2A	205
PROTECTIVE DEVICE FOR RAILROAD SIGNAL		RS-1	208
ROUTE SHIELDS AND "EXIT ONLY" PANELS		SN-2	221
STANDARD ROADSIDE SIGNS		SN-3	222
STANDARD ROADSIDE SIGNS		SN-3A	223
STANDARD ROADSIDE SIGNS		SN-3B	224
STANDARD ROADSIDE SIGN ASSEMBLY & INSTALLATION		SN-4	225
STANDARD ROADSIDE SIGN ASSEMBLY & INSTALLATION		SN-4A	226
STANDARD ROADSIDE SIGN ASSEMBLY & INSTALLATION		SN-4B	227
TYPICAL INSTALLATION OF GROUND MOUNTED DIRECTIONAL SIGNS		SN-5	228
BREAKAWAY SIGN SUPPORTS		SN-6	229
BREAKAWAY SIGN SUPPORTS		SN-6A	230
BREAKAWAY SIGN SUPPORTS		SN-6B	231
TRAFFIC CONTROL PLAN WITH FLAGGER (ONE-LANE OR TWO WAY TRAFFIC)		TCP-1	250
4-LANE TO 2-LANE TRANSITION	(12-01-99)	TCP-6	255
2-LANE TO 4-LANE TRANSITION	(12-01-99)	TCP-7	256
SHORT DURATION CLOSING OF TWO-LANE TWO-WAY HIGHWAYS		TCP-8	257
HIGHWAY SIGN AND BARRICADE DETAILS FOR CONSTRUCTION PROJECTS		TCP-10	259
TRAFFIC CONTROL PLAN MOBILE OPERATIONS MULTILANE ROADS AND TWO-LANE ROADS	(12-01-99)	TCP-11	260
TRAFFIC CONTROL PLAN: UNEVEN PAVEMENT DETAILS		TCP-14	263
TEMPORARY STRIPING FOR TRAFFIC CONTROL 2-LANE AND 4-LANE DIVIDED HIGHWAYS	(12-01-99)	TCP-15	264
TEMPORARY STRIPING FOR TRAFFIC CONTROL 4-LANE AND 5-LANE UNDIVIDED HIGHWAYS	(12-01-99)	TCP-16	265
RURAL DRIVEWAYS		RD-1	271
TYPICAL GRADING TRANSITION BETWEEN CUTS & FILLS		GT-1	272
SIGHT FLARE	(12-01-99)	SF-1	273
DRIVEWAYS, CURB & GUTTER, & SIDEWALK		SD-1	287
DRIVEWAYS, INTEGRAL CURB, & SIDEWALK		SD-2	288
CURB-CUT RAMP		CCR-1	289
MISCELLANEOUS DETAIL SHEET		MDS-1	290

DATE	REVISION	BY

MISSISSIPPI DEPARTMENT OF TRANSPORTATION

DETAILED INDEX

HWY. 51

COUNTY: TATE
PROJ. NO.: STP-2920-00(001)

DEPARTMENT OF TRANSPORTATION MISSISSIPPI METRIC

WORKING NUMBER DI-2

SHEET NUMBER 3

FILENAME: DI.DGN
DESIGN TEAM SUTTERFIELD CHECKED _____ DATE _____

METRIC PLAN
ROADWAY DESIGN DIVISION
MISSISSIPPI DEPARTMENT OF TRANSPORTATION

STATE	PROJECT NO.
MISS.	STP-2920-00(001)

DESCRIPTION OF SHEET	WKG. NO.	SH. NO.
STANDARD DRAWINGS - ROADWAY DESIGN SHEETS (METRIC VERSION) (CONT.)		
DETAILS OF PAVED FLUMES	PF-1	291
PIPE CULVERT INSTALLATION	PI-1	300
CONCRETE PIPE COLLAR	PC-1	301
JUNCTION BOX FOR PIPE CULVERTS	JB-1	302
JUNCTION BOX TYPE 2 FOR TRAFFIC LOAD (MAXIMUM "W" = 2800 mm)	JB-2	304
BRANCH CONNECTIONS	BC-1	305
TYPE II MEDIAN INLET (1300-mm PIPE & UNDER)	MI-2	309
MEDIAN INLET FOR BOX CULVERTS (TYPE I AND II)	MI-3	311
MEDIAN INLET (FLUSH WITH FORESLOPE)	MI-4	312
MEDIAN INLET (FLUSH WITH DITCH PLUG)	MI-4A	313
DETAILS OF GRATES FOR MEDIAN INLETS	IG-1	314
PAVED INLET APRON AND MEDIAN DITCH PLUG	PA-1	318
STORM SEWER STRUCTURE - TYPE SS-2	SS-2	322
STORM SEWER INLET - TYPE SS-3	SS-3	323
STORM SEWER INLET - TYPE SS-4 (HEADER CURB)	SS-4	324
DROP INLET AND GRATE DETAILS FOR PIPE AND BOX CULVERTS	B-9	325
SMALL ANIMAL GUARD AND UNDERDRAIN MARKER	SAG-1	327
FLARED END SECTION FOR CONCRETE PIPE	FE-1	328
FLARED END SECTION FOR CONCRETE ARCH PIPE	FE-1A	329
DETAILS OF NORMAL UNDERDRAIN AND STORM DRAIN USED AS UNDERDRAIN	UD-1	331
NORMAL UNDERDRAIN TYPE II	UD-2	332
STANDARD DRAWINGS - BRIDGE SHEETS (20)		
BASIC CULVERT DRAWING - BARREL JOINT LOCATIONS NORMAL & SKEWED CULVERTS GROUP I DIAGRAMS	M-IBJL-1	366.1
BASIC CULVERT DRAWING - BARREL JOINT LOCATIONS NORMAL & SKEWED CULVERTS GROUP II DIAGRAMS	M-IBJL-1	366.2
COLLAR DETAILS - FOR BOX STRUCTURES (SINGLE, DOUBLE, TRIPLE & QUADRUPLE)	M-ICJ-1	367
SKEWED COLLAR DETAILS - FOR BOX STRUCTURES (SINGLE, DOUBLE, TRIPLE & QUADRUPLE)	M-ICJS-1	368
BASIC CULVERT DRAWING - SINGLE CELL - HEIGHT 1800 mm SPANS 1800-6000 mm	M-IBS-1800-2W	370.1
BASIC CULVERT DRAWING - SINGLE CELL - HEIGHT 1800 mm SPANS 1800-6000 mm	M-IBS-1800-2W	370.2
BASIC CULVERT DRAWING - SINGLE CELL - HEIGHT 3000 mm SPANS 3000-6600 mm	M-IBS-3000-2W	372.1
BASIC CULVERT DRAWING - SINGLE CELL - HEIGHT 3000 mm SPANS 3000-6600 mm	M-IBS-3000-2W	372.2
WINGS WITH 1:3 SLOPE FOR BASIC CULVERT DRAWING - SINGLE CELL HEIGHTS 1800-3600 mm SPANS 1800-7200 mm	M-IWS-3	374
WINGS WITH 1:3 SLOPE FOR BASIC CULVERT DRAWING - SINGLE CELL HEIGHTS 1800-3600 mm SPANS 1800-7200 mm	M-IWS-3	375.1
WINGS WITH 1:3 SLOPE FOR BASIC CULVERT DRAWING - SINGLE CELL HEIGHTS 1800-3600 mm SPANS 1800-7200 mm	M-IWS-3	375.2
BASIC CULVERT DRAWING - DOUBLE CELL - HEIGHT 1800 mm SPANS 3600-9600 mm	M-IBD-1800-2W	383.1
BASIC CULVERT DRAWING - DOUBLE CELL - HEIGHT 1800 mm SPANS 3600-9600 mm	M-IBD-1800-2W	383.2
WINGS WITH 1:3 SLOPE FOR BASIC CULVERT DRAWING - DOUBLE CELL HEIGHTS 1800-3600 mm SPANS 3600-12 000 mm	M-IWD-3	387
WINGS WITH 1:3 SLOPE FOR BASIC CULVERT DRAWING - DOUBLE CELL HEIGHTS 1800-3600 mm SPANS 3600-12 000 mm	M-IWD-3	388.1
WINGS WITH 1:3 SLOPE FOR BASIC CULVERT DRAWING - DOUBLE CELL HEIGHTS 1800-3600 mm SPANS 3600-12 000 mm	M-IWD-3	388.2
BOX CULVERT DRAWING - M-IBD CULVERTS MODIFIED FOR HIGH COVER WINGS WITH 1:3 SLOPE	M-IBDM-3W	393
BOX CULVERT DRAWING - M-IBD CULVERTS MODIFIED FOR HIGH COVER WINGS WITH 1:3 SLOPE	M-IBDM-3W	394
BOX CULVERT DRAWING - 15° SKEW DETAILS - WINGS WITH 1:3 SLOPE SINGLE & DOUBLE CELL CULVERTS	M-ISK-15-3W	397.1
BOX CULVERT DRAWING - 15° SKEW DETAILS - WINGS WITH 1:3 SLOPE SINGLE & DOUBLE CELL CULVERTS	M-ISK-15-3W	397.2
BRIDGE SHEETS (40)		
BRIDGE "A" AT STA. 9+371.755 LT. LANE		466-479
BRIDGE "B" AT STA. 9+856.755 LT. LANE		480-482
BRIDGE "C" AT STA. 10+052.645 LT. LANE		483-494
BRIDGE "D" AT STA. 10+471.755 LT. LANE		495-497
BRIDGE "E" AT STA. 10+693.755 LT. LANE		498-500
BRIDGE "F" AT STA. 10+909.755 LT. LANE		501-503
BOX CULVERT AT STA. 7+685	BC-1	766
BOX CULVERT AT STA. 7+685	BC-2	767

DESCRIPTION OF SHEET	WKG. NO.	SH. NO.
CROSS SECTIONS (134)		
MAINLINE (HWY. 51) STA. 6+622.84 (B.O.P.) TO STA. 13+650 (E.O.P.)		901-1018
LOCAL ROAD STA. 7+116.738 (HWY. 51) (STA. 9+350.00 TO STA. 9+984.70 LOC. RD.)		1019-1030
LOCAL ROAD STA. 13+387.50 (HWY. 51) (STA. 9+850.00 TO STA. 10+000.00 LOC. RD.)		1031-1034
TOTAL SHEETS - 428		

METRIC PLAN
ROADWAY DESIGN SHEETS - A.A.D.-SECTION
MISSISSIPPI DEPARTMENT OF TRANSPORTATION

DATE	REVISION	BY

MISSISSIPPI DEPARTMENT OF TRANSPORTATION

DETAILED INDEX

HWY. 51

COUNTY: TATE
PROJ. NO.: STP-2920-00(001)

WORKING NUMBER DI-3

SHEET NUMBER 4

FILENAME: DI.DGN
DESIGN TEAM SUTTERFIELD CHECKED _____ DATE _____

STATE	PROJECT NO.
MISS.	BR-STP-2920-00(001)

DESCRIPTION OF SHEETS SPECIAL DESIGN SHEETS ~ BRIDGE DRAWINGS	WORKING NUMBER	SHEET NUMBER
BRIDGE AT STA. 9+371.755 LT. LN.	A1 OF 14	466
FOUNDATION PLAN	A2 OF 14	467
GENERALIZED SOIL PROFILE	A3 OF 14	468
END BENT DETAILS	A4 OF 14	469
END BENT DETAILS	A5 OF 14	470
INT. BENTS NO. 2L, 3L, 5L & 6L DETAILS	A6 OF 14	471
INT. BENTS NO. 4L DETAILS	A7 OF 14	472
12 m PLAN OF SPAN DETAILS	A8 OF 14	473
12 m SPAN DETAILS	A9 OF 14	474
MISC. SPAN DETAILS	A10 OF 14	475
RAILING DETAILS	A11 OF 14	476
12 m END BEAM DETAILS (END SPAN)	A12 OF 14	477
12 m INT. BEAM DETAILS (INT. SPAN)	A13 OF 14	478
PRESTRESS CONCRETE PILE DETAILS	A14 OF 14	479
BRIDGE AT STA. 9+856.755 LT. LN.	B1 OF 3	480
FOUNDATION PLAN	B2 OF 3	481
GENERALIZED SOIL PROFILE	B3 OF 3	482
BRIDGE AT STA. 10+052.645 LT. LN.	C1 OF 12	483
FOUNDATION PLAN	C2 OF 12	484
GENERALIZED SOIL PROFILE	C3 OF 12	485
END BENT DETAILS	C4 OF 12	486
END BENT DETAILS	C5 OF 12	487
INT. BENTS NO. 2L & 3L DETAILS	C6 OF 12	488
30 m PLAN OF SPAN NO. 1L DETAILS	C7 OF 12	489
30 m PLAN OF SPAN NO. 2L DETAILS	C8 OF 12	490
30 m PLAN OF SPAN NO. 3L DETAILS	C9 OF 12	491
30 m SPAN DETAILS	C10 OF 12	492
30 m END BEAM DETAILS (TYPE IV END SPAN)	C11 OF 12	493
30 m INT. BEAM DETAILS (TYPE IV INT. SPAN)	C12 OF 12	494
BRIDGE AT STA. 10+471.755 LT. LN.	D1 OF 3	495
FOUNDATION PLAN	D2 OF 3	496
GENERALIZED SOIL PROFILE	D3 OF 3	497
BRIDGE AT STA. 10+693.755 LT. LN.	E1 OF 3	498
FOUNDATION PLAN	E2 OF 3	499
GENERALIZED SOIL PROFILE	E3 OF 3	500
BRIDGE AT STA. 10+909.755 LT. LN.	F1 OF 3	501
FOUNDATION PLAN	F2 OF 3	502
GENERALIZED SOIL PROFILE	F3 OF 3	503

BRIDGE DIVISION REVISIONS		
DATE	SHEET NO.	BY

STRUCTURE KEY:

DATE	REVISIONS	BY

MISSISSIPPI DEPARTMENT OF TRANSPORTATION
DETAILED INDEX
(BRIDGE)

PROJECT 102251/301000
BR-STP-2920-00(001)

TATE COUNTY

WORKING NUMBER DI-4

DESIGNED TLJ CHECKED BJJ ISSUED MKC
DETAILED TJA DATE 05-08-03 DATE 06-02-03

SHEET NUMBER 5

STATE	PROJECT NO.
MISS.	STP-2920-00(001)

GENERAL NOTES

PUBLIC UTILITIES :

1. FOR LIST OF PUBLIC UTILITIES, SEE WORKING SHEET 3.
2. THE LOCATION AND SPACING OF SIGNS, SHOWN ON THE TRAFFIC CONTROL PLANS, ARE APPROXIMATE AND MAY BE ADJUSTED AS NECESSARY TO FIT FIELD CONDITIONS.
3. A SOIL PROFILE PREPARED FOR THIS PROJECT ON SAMPLES TAKEN FROM HOLES AT LOCATIONS INDICATED IN THE TEST REPORTS IS ON FILE IN THE DISTRICT AND CENTRAL CONSTRUCTION OFFICES AND IS AVAILABLE FOR EXAMINATION. THE DEPARTMENT DOES NOT GUARANTEE THAT THE MATERIALS AS SHOWN IN THE REPORTS ARE NECESSARILY TO BE FOUND OUTSIDE THE TEST HOLES.
4. 25% SHRINKAGE FACTOR USED IN THE EARTHWORK CALCULATIONS IS FOR DESIGN ESTIMATING PURPOSES ONLY.
5. EXISTING UNDERGROUND UTILITY LINES ARE SHOWN ON THE DRAWINGS BASED UPON THE BEST INFORMATION AVAILABLE TO THE ENGINEER. THE ENGINEER CAN NOT AND DOES NOT WARRANT THAT THIS INFORMATION IS COMPLETE OR ACCURATE. THE CONTRACTOR MUST COORDINATE DIRECTLY WITH THE INVOLVED UTILITY OWNERS TO HAVE UNDERGROUND UTILITY LINES FIELD LOCATED IN ADVANCE OF CONSTRUCTION.
6. WORK ON STRUCTURES FOR THIS PROJECT REQUIRES EXCAVATION IN THE IMMEDIATE VICINITY OF TRAFFIC AND ADJACENT PROPERTIES, THEREFORE THE RISK OF A FAILURE OCCURRING DURING THE EXCAVATION REQUIRES THAT EXTREME CAUTION BE EXERCISED. IT SHALL BE THE CONTRACTOR'S RESPONSIBILITY TO PLACE WHAT BRACING, SHORING OR GROUND SUPPORT SYSTEM THAT IS DEEMED NECESSARY TO PREVENT A FAILURE AND PROTECT THE PERSONS WORKING NEAR THE EXCAVATION OR ANY STRUCTURE ADJACENT TO THE EXCAVATION. ALL COSTS FOR ANY PROTECTIVE MEASURES, INCLUDING THE MATERIALS AND LABOR FOR DESIGNING, DRAWING AND CONSTRUCTING THE FACILITY, SHALL BE INCLUDED IN THE PRICE FOR CONTRACT ITEMS.
7. FULL COLLARS ARE REQUIRED AT ALL JOINTS ON BOX CULVERTS AND/OR BOX BRIDGES.
8. FLORESCENT ORANGE SHEETING SHALL BE USED ON ALL CONSTRUCTION AND TRAFFIC CONTROL SIGNS EXCEPT FOR THOSE DESIGNATED IN PLANS TO BE BLACK LEGEND AND BORDER ON WHITE BACKGROUND.
9. VOIDS CREATED BY THE REMOVAL OF POSTS, CONCRETE ANCHORS, FOOTINGS, ETC., SHALL BE BACKFILLED AND TAMPED IN ACCORDANCE WITH SECTION 203 OF THE MS. STANDARD SPECIFICATION FOR ROAD AND BRIDGE CONSTRUCTION.
10. IT SHALL BE THE RESPONSIBILITY OF THE CONTRACTOR TO PROTECT EXISTING STRUCTURES SUCH AS PIPES, INLETS, APRONS, BRIDGES, ETC. FROM DAMAGE WHICH MIGHT OCCUR DURING CONSTRUCTION. EXTREME CARE SHOULD BE EXERCISED IN UNDERCUT AREAS (IF ANY) AND UNDERCUT DEPTH MAY BE ADJUSTED AT CROSS DRAINS, AS DIRECTED BY THE ENGINEER. THE CONTRACTOR SHALL REPLACE OR REPAIR, AS DIRECTED BY THE ENGINEER, ANY STRUCTURES DAMAGED DURING THE LIFE OF THE CONTRACT. NO PAYMENT WILL BE MADE FOR REPLACEMENT OR REPAIR OF DAMAGED STRUCTURES.
11. TYPE "A" SILT BASIN WILL BE REQUIRED UPSTREAM OF EACH MEDIAN INLET AND AS DIRECTED BY THE ENGINEER. (SEE WK. NO. TEC-2 FOR DETAILS.)
12. SOME WORK MAY BE REQUIRED OUTSIDE THE PROJECT LIMITS BEYOND THE B.O.P. AND E.O.P. NO ADDITIONAL COMPENSATION WILL BE MADE FOR SUCH WORK EXCEPT AS PROVIDED BY SPECIFIC PAY ITEMS SHOWN ON THE PLANS.
13. ALL EXISTING ABANDONED UTILITY PIPES OR OTHER OBSTRUCTIONS WHICH CONFLICT WITH REQUIRED CONSTRUCTION SHALL BE REMOVED AT THE CONTRACTOR'S EXPENSE AS AN ABSORBED ITEM. EXISTING PIPES THAT ARE TO BE ABANDONED IN PLACE SHALL BE PLUGGED ON EACH END WITH CONCRETE (ABSORBED ITEM).
14. ALL POST LENGTHS FOR SIGNS SHALL BE VERIFIED IN THE FIELD PRIOR TO FABRICATION.
15. TEMPORARY STRIPING SHALL CONFORM TO FINISHED STRIPE SPECIFICATIONS FOR ALIGNMENT AND STRAIGHTNESS.
16. REMOVAL OF RAISED PAVEMENT MARKERS IS NOT CONSIDERED A SEPARATE PAY ITEM.
17. THE COST OF STRIPPING, STOCKPILING, PLATING, AND SPREADING OF TOPSOIL SHALL BE PAID FOR ACCORDING TO SECTION 203.03.01 OF THE MISSISSIPPI STANDARD SPECIFICATIONS FOR ROAD AND BRIDGE CONSTRUCTION (METRIC) (1996 EDITION).
18. ALL PIPE JOINTS ARE TO BE WRAPPED IN TYPE V GEOTEXTILE FABRIC 0.6 m (24") WIDTH. ALL PICKUP HOLES ARE TO BE PLUGGED AND COVERED WITH TYPE V GEOTEXTILE FABRIC TO THE SATISFACTION OF THE ENGINEER (NOT A SEPARATE PAY ITEM).
19. REMAINING EXISTING TWO-LANE SECTION OF HWY. 51 IS TO BE RE-STRIPED TO MATCH EXISTING MARKINGS.
20. PRIOR TO POURING PAVED ISLANDS, THE TRAFFIC ENGINEERING DIVISION SHALL BE NOTIFIED SO THAT ANY SIGNS WHICH MAY BE REQUIRED IN ISLANDS CAN BE LOCATED.
21. ALL DRIVEWAYS REQUIRED WILL BE TYPE "2" UNLESS OTHERWISE NOTED IN THE PLANS.
22. ANYWHERE IN THESE PLANS REFERENCE IS MADE TO PROJECT NUMBER STP-2920(1)A, IT IS UNDERSTOOD THAT PROJECT NO. BR-STP-2920-00(001) IS THE CORRECT PROJECT NUMBER.
23. CONTRACTOR IS REQUIRED TO MAKE CLEAN, STRAIGHT EDGES WHEN REMOVING THE PAVEMENT ON EXISTING SHOULDERS.
24. ACCESS TO ALL PRIVATE DRIVES SHALL REMAIN OPEN AT ALL TIMES UNLESS OTHERWISE APPROVED BY THE ENGINEER. WHEN DRIVEWAYS ARE REQUIRED TO MAINTAIN CONTINUOUS SERVICE, TEMPORARY DRIVEWAYS SHALL BE CONSTRUCTED WITH GRANULAR MATERIAL (CRUSHED STONE) AS DIRECTED BY THE ENGINEER. THE COST OF TEMPORARY DRIVEWAY REMOVAL WILL NOT BE MEASURED AND PAID FOR SEPARATELY BUT WILL BE CONSIDERED SUBSIDIARY TO THE CONTRACT.
25. ANYWHERE IN THESE PLANS REFERENCE IS MADE TO PROJECT NUMBER BR-STP-2920-00(001), IT IS UNDERSTOOD THAT PROJECT NO. STP-2920-00(001) IS THE CORRECT PROJECT NUMBER.

DATE	REVISION	BY

MISSISSIPPI DEPARTMENT OF TRANSPORTATION

GENERAL NOTES

HWY. 51

COUNTY: TATE
PROJ. NO.: STP-2920-00(001)

FILENAME: GN.DGN
DESIGN TEAM SUTTERFIELD CHECKED _____ DATE _____

WORKING NUMBER GN-1

SHEET NUMBER 6

METRIC PLAN
ROADWAY DESIGN DIVISION C.A.D.D. SECTION
MISSISSIPPI DEPARTMENT OF TRANSPORTATION

STATE	PROJECT NO.
MISS.	BR-STP-2920-01(001)

GENERAL NOTES

TRAFFIC SIGNAL:

1. ALL SIGNS, SIGNALS, PAVEMENT MARKINGS, AND TEMPORARY TRAFFIC CONTROL DEVICES ARE TO CONFORM TO THE MANUAL ON UNIFORM TRAFFIC CONTROL DEVICES (LATEST EDITION).

2. UNDERGROUND UTILITIES SHOWN ON PLANS ARE PLOTTED IN THEIR APPROXIMATE LOCATIONS FROM THE BEST INFORMATION AVAILABLE TO THE ENGINEER. THE ENGINEER DOES NOT GUARANTEE THEIR ACCURACY OR GUARANTEE THAT ALL UTILITIES ARE SHOWN. THE CONTRACTOR SHALL BE RESPONSIBLE FOR MAKING FOR HIMSELF INDEPENDENT INVESTIGATIONS, INCLUDING SUBSURFACE INVESTIGATIONS AS MAY BE NECESSARY.

3. ALL RAISED OBJECTS TO BE PLACE A MINIMUM OF 0.6 METERS BEHIND FACE OF CURB. NEW TRAFFIC SIGNAL POLES TO BE PLACED A MINIMUM OF 1.5 METERS BEHIND FACE OF CURB UNLESS WRITTEN PERMISSION IS AUTHORIZED BY ENGINEER. PLACEMENT OF RAISED OBJECTS AND NEW POLES SHALL CONFORM TO A.D.A. REQUIREMENTS.

4. ALL SIGNAL POLES TO BE GALVANIZED. CONTRACTOR TO VERIFY ALL MAST ARM POLE LOCATIONS TO BE SURE THERE ARE NO UTILITY CONFLICTS PRIOR TO ORDERING POLES.

5. ALL POLES, PULL BOXES, CONTROLLERS, AND PAVEMENT MARKINGS SHALL BE FIELD LOCATED BY THE ENGINEER AND THE CONTRACTOR AT THE NEAREST PRACTICAL LOCATION INDICATED ON THE PLAN SHEETS.

6. EXTEND POLE FOUNDATIONS TO APPROXIMATELY 75 mm ABOVE THE SHOULDER ELEVATION OR THE TOP OF CURB ELEVATION.

7. ALL SIGNAL AND PEDESTRIAN HEADS TO BE LED TYPE. ALL SIGNAL AND PEDESTRIAN HEADS AND PUSH BUTTONS TO BE BLACK IN COLOR. PEDESTRIAN HEADS TO BE COUNTDOWN TYPE.

8. CONTROLLER TIMINGS TO BE PROVIDED BY THE MDOT.

9. ONCE THE CONTRACTOR BEGINS WORK AT ONE SIGNALIZED INTERSECTION, HE IS RESPONSIBLE FOR MAINTENANCE OF ALL PROJECT RELATED SIGNALIZED INTERSECTIONS. AS PER M.D.O.T. PAY ITEM 618-A, MAINTENANCE OF TRAFFIC.

10. SPECIFICATIONS FROM MISSISSIPPI STANDARD SPECIFICATIONS FOR ROAD & BRIDGE CONSTRUCTION BY MISSISSIPPI DEPARTMENT OF TRANSPORTATION, METRIC 1996 EDITION WILL BE USED OTHERWISE NOTED BY SPECIAL PROVISIONS.

11. CONTRACTOR SHALL MAKE THE APPLICATION FOR POWER SERVICE, COORDINATING WITH CITY OFFICIALS, IN ADVANCE OF REQUIRING THE ELECTRICAL SERVICE.

12. CONTRACTOR SHALL SCHEDULE WORK SO THAT THE CHANGE OVER FROM THE EXISTING SIGNAL SYSTEM TO THE NEW SIGNAL SYSTEM SHALL BE DONE EXPEDITIOUSLY. CONTRACTOR IS REQUIRED TO PROVIDE FOR MANUAL TRAFFIC CONTROL BY CONTRACTOR EMPLOYED OFF-DUTY LOCAL LAW ENFORCEMENT OFFICERS DURING THE TIME THE SIGNAL IS OUT OF OPERATION. (COST ABSORBED).

13. CITY POLES (WOOD, CONCRETE OR STEEL) SUPPORTING ONLY EXISTING TRAFFIC SIGNAL EQUIPMENT AND/OR STREET LIGHTS TO BE REMOVED BY CONTRACTOR. ALL EXISTING TRAFFIC SIGNAL EQUIPMENT SHALL BE REMOVED AND SALVAGED BY THE CONTRACTOR WITH THE COST TO BE ABSORBED. THE EXISTING POLES, CABINETS, CONTROLLERS, TRAFFIC SIGNAL HEADS, AND OTHER ITEMS AS NOTED ON PLANS ARE TO BE STOCKPILED AS DIRECTED BY THE ENGINEER FOR PICKUP BY STATE FORCES. ALL OTHER SIGNAL EQUIPMENT SHALL BECOME THE PROPERTY OF THE CONTRACTOR. POLES AND FOUNDATIONS OF EXISTING SIGNAL INSTALLATIONS SHALL BE CUT OFF 6" BELOW GROUND OR REMOVED AND AREA RESTORED TO MATCH ADJACENT SURFACE AS DIRECTED BY THE ENGINEER.

14. REMOVED TRAFFIC SIGNAL EQUIPMENT IS THE PROPERTY OF THE MDOT AND IS TO BE STORED AT THE LOCATION SET UP BY MDOT. (COST ABSORBED).

15. FLUORESCENT ORANGE SHEETING SHALL BE USED ON ALL CONSTRUCTION AND TRAFFIC CONTROL SIGNS EXCEPT FOR THOSE DESIGNATED IN THE PLANS TO BE BLACK LEGEND AND BORDER ON WHITE BACKGROUND.

16. SEE WORKING NUMBER TSD-1 FOR ADDITIONAL GENERAL NOTES.

17. TRAFFIC SIGNAL POLES SHALL BE DESIGNED IN ACCORDANCE WITH THE 2001 AASHTO SPECIFICATIONS, AS AMENDED. BASIC WIND SPEED FOR THIS PROJECT SHALL BE 145 KPH. DESIGN LIFE SHALL BE 50 YEARS. FATIGUE CATEGORY SHALL BE II. GALLOPING AND TRUCK INDUCED WIND LOADS SHALL NOT BE CONSIDERED. ICE LOADS FOR THIS PROJECT WILL BE CONSIDERED. ANY DEVIATION FROM THESE CRITERIA MUST BE APPROVED IN WRITING BY THE TRAFFIC ENGINEERING DIVISION, 601-359-1454.

REVISION	BY	DATE

MISSISSIPPI DEPARTMENT OF TRANSPORTATION

GENERAL NOTES

HWY. 51

PROJECT NO.: BR-STP-2920-00(001)

COUNTY: TATE

FILENAME: GN-2.DGN

DESIGN TEAM NS CHECKED DATE

WORKING NUMBER GN-2

SHEET NUMBER 7

PLAN ROADWAY DESIGN DIVISION MISSISSIPPI DEPARTMENT OF TRANSPORTATION

3/16/2007 09:59:45AM S:\PROJECTS\CADFILES\5741.015 SENATOBIA\GN-2.DGN

STATE	PROJECT NO.
MISS.	STP-2920-00(001)

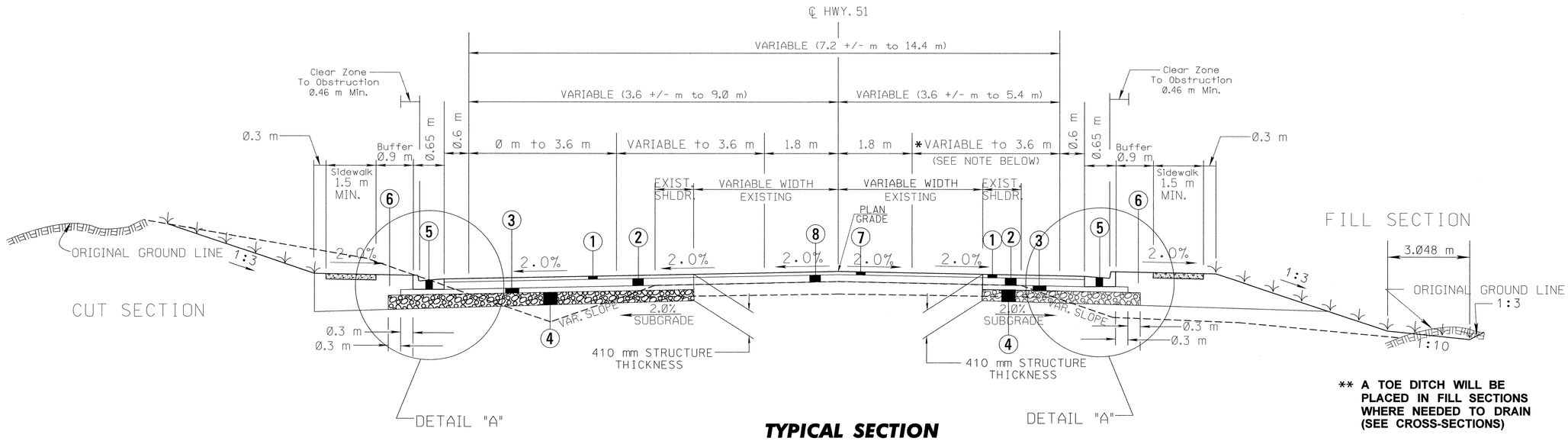

** A TOE DITCH WILL BE PLACED IN FILL SECTIONS WHERE NEEDED TO DRAIN (SEE CROSS-SECTIONS)

TYPICAL SECTION
2-LANE TO 5-LANE TRANSITION
HWY. 51

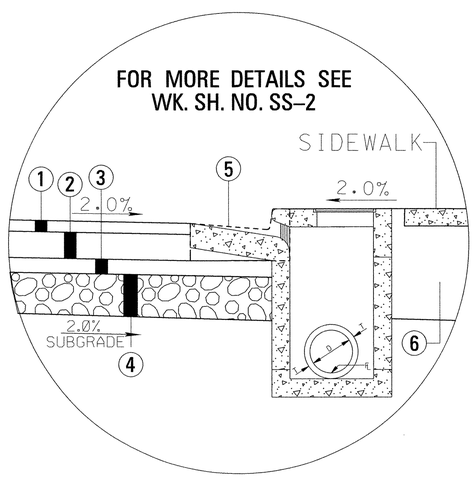

STA. LIMITS

STA. 6+622.84 (B.O.P.) TO STA. 6+767.00 (+/-)

* STA. 6+622.84 - STA. 6+667.73 - TRANSITION FROM 1.8 m +/- TO 3.6 m WIDTH.
* STA. 6+667.73 - STA. 6+767.00 - MAINTAIN 3.6 m WIDTH.

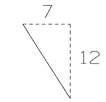

ANGLE OF REPOSE PERMITTED

PROPOSED PAVEMENT

INDICATES AREA TO BE TREATED IN ACCORDANCE WITH THE VEGETATION SCHEDULE. SEE WK. SH. NO. VS-1

1. 50 mm HOT MIX ASPHALT, MT (12.5 mm MIX) (1 @ 50) REQ'D.
2. 110 mm HOT MIX ASPHALT, MT (19 mm MIX) (2 @ 55) REQ'D.
3. 75 mm HOT MIX ASPHALT, MT (19 mm MIX) (1 @ 75 mm) REQ'D.
4. 175 mm CRUSHED STONE REQ'D. WITH GEOTEXTILE STABILIZATION, NON-WOVEN
5. TYPE "1" (MODIFIED) CONCRETE CURB & GUTTER
6. 355 mm & VARIABLE BORROW MATERIAL (B-9) REQ'D.
7. 50 mm & VAR. HOT MIX ASPHALT, MT (12.5 mm MIX) (1 @ 50 mm) REQ'D.
8. 110 mm & VAR. HOT MIX ASPHALT, MT (19 mm MIX) (2 @ 55 mm) REQ'D.

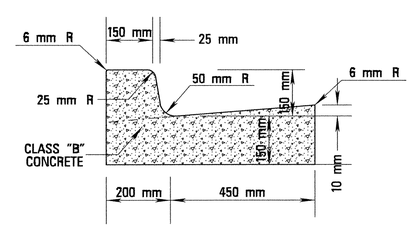

DETAIL OF TYPE "1" (MODIFIED) COMBINATION CURB & GUTTER

DATA FOR PAVEMENT DETERMINATION

(2001) ADT	=	13,450	Current
(2011) ADT	=	17,750	
(2021) ADT	=	23,500	Design
DHV	=	2100	
D	=	50	% of DHV
T	=	5	% of DHV
T (total)	=	8	% of DHV
18K (Rigid)	=	1515	/ 1000
18K (Flex)	=	995	/ 1000
Design CBR	=	6	

DATE	REVISION	BY

MISSISSIPPI DEPARTMENT OF TRANSPORTATION

TYPICAL SECTIONS
HWY. 51

2-LANE TO 5-LANE TRANSITION
MAINLINE (SENATOBIA)

COUNTY: TATE
PROJECT NO.: STP-2920-00(001)

FILENAME: TS.DGN
DESIGN TEAM SUTTERFIELD CHECKED _____ DATE _____

WORKING NUMBER TS-1
SHEET NUMBER 8

METRIC PLAN
ROADWAY DESIGN DIVISION
MISSISSIPPI DEPARTMENT OF TRANSPORTATION

STATE	PROJECT NO.
MISS.	STP-2920-00(001)

NOTE: SEE WK. SH. NO. W1 OF 4 THRU W4 OF 4 FOR DETAIL OF RETAINING WALL STA. 6+850 TO STA. 6+958 LT.

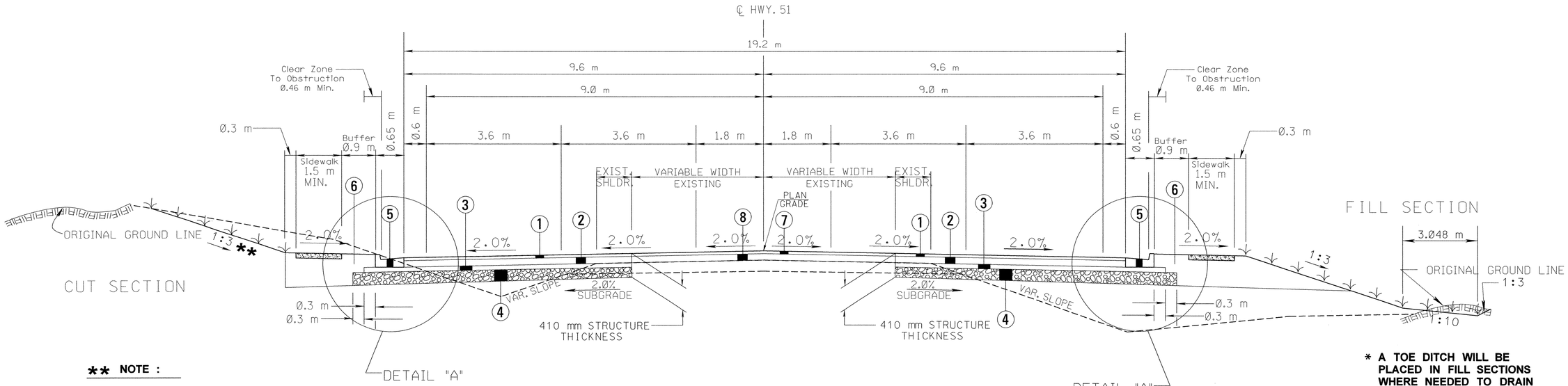

** NOTE :

1:1 & VAR. BACKSLOPE WITH MIN. WIDTH BEHIND CURB STA. 6+940 (+/-) TO STA. 6+955 (+/-) LT. SIDE AT A/C PIT.

* A TOE DITCH WILL BE PLACED IN FILL SECTIONS WHERE NEEDED TO DRAIN (SEE CROSS-SECTIONS)

TYPICAL SECTION

5-LANE

HWY. 51

STA. LIMITS

STA. 6+767.00 (+/-) TO STA. 7+038.77
STA. 7+196.00 TO STA. 8+040.00 (+/-)

INDICATES AREA TO BE TREATED IN ACCORDANCE WITH THE VEGETATION SCHEDULE. SEE WK. SH. NO. VS-1

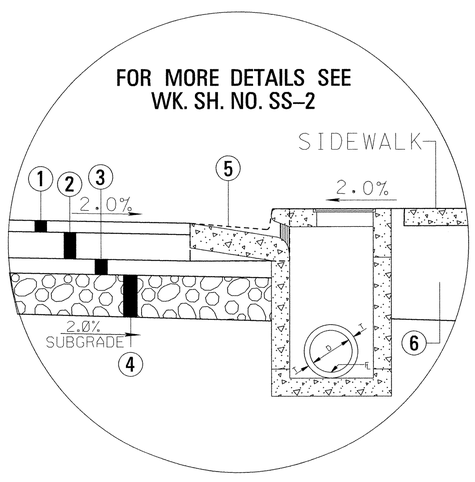

PROPOSED PAVEMENT

1. 50 mm HOT MIX ASPHALT, MT (12.5 mm MIX) (1 @ 50) REQ'D.
2. 110 mm HOT MIX ASPHALT, MT (19 mm MIX) (2 @ 55) REQ'D.
3. 75 mm HOT MIX ASPHALT, MT (19 mm MIX) (1 @ 75 mm) REQ'D.
4. 175 mm CRUSHED STONE REQ'D. WITH GEOTEXTILE STABILIZATION, NON-WOVEN
5. TYPE "1" (MODIFIED) CONCRETE CURB & GUTTER
6. 355 mm & VARIABLE BORROW MATERIAL (B-9) REQ'D.
7. 50 mm & VAR. HOT MIX ASPHALT, MT (12.5 mm MIX) (1 @ 50 mm) REQ'D.
8. 110 mm & VAR. HOT MIX ASPHALT, MT (19 mm MIX) (2 @ 55 mm) REQ'D.

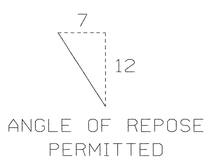

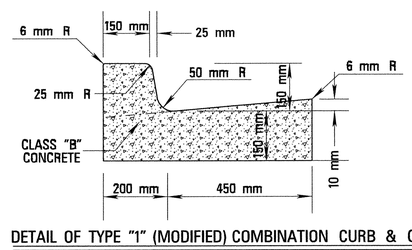

DETAIL OF TYPE "1" (MODIFIED) COMBINATION CURB & GUTTER

DATE	REVISION	BY

MISSISSIPPI DEPARTMENT OF TRANSPORTATION

TYPICAL SECTIONS
HWY. 51

5-LANE (WITH SIDEWALK)
MAINLINE (SENATOBIA)

COUNTY: TATE
PROJECT NO.: STP-2920-00(001)

FILENAME: TS.DGN
DESIGN TEAM SUTTERFIELD CHECKED DATE

WORKING NUMBER TS-2
SHEET NUMBER 9

METRIC PLAN
ROADWAY DESIGN DIVISION
MISSISSIPPI DEPARTMENT OF TRANSPORTATION

STATE	PROJECT NO.
MISS.	STP-2920-00(001)

NOTE: RIGHT TURN LANE RIGHT OF CENTERLINE SHOWN.
RIGHT TURN LANE LEFT OF CENTERLINE SIMILAR BUT OPPOSITE BY DESIGN.

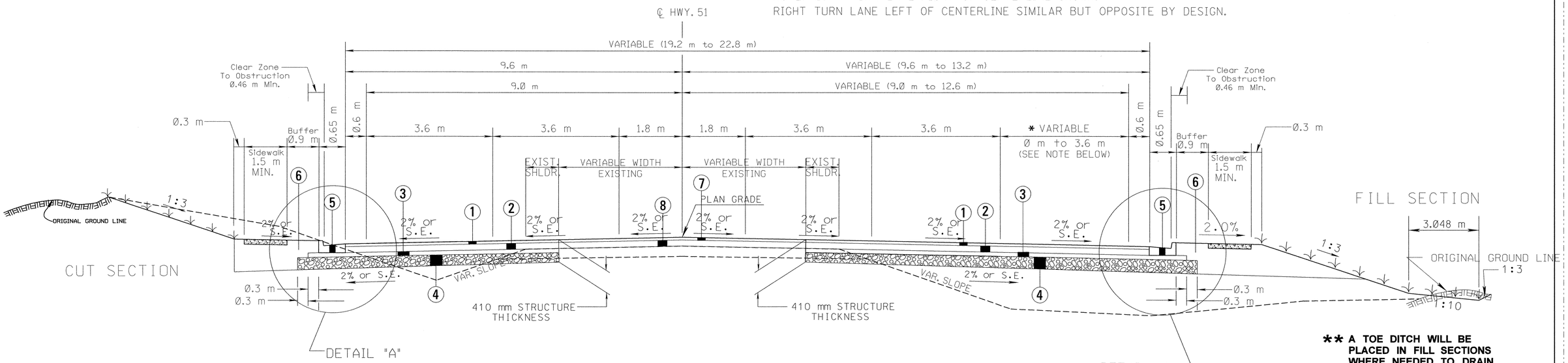

** A TOE DITCH WILL BE PLACED IN FILL SECTIONS WHERE NEEDED TO DRAIN (SEE CROSS-SECTIONS)

TYPICAL SECTION
5-LANE
HWY. 51

INDICATES AREA TO BE TREATED IN ACCORDANCE WITH THE VEGETATION SCHEDULE. SEE WK. SH. NO. VS-1

STA. LIMITS

STA. 7+038.77 TO STA. 7+196.00

* RIGHT TURN LANE RIGHT OF CENTERLINE:
  STA. 7+038.77 - STA. 7+061.63 - TRANSITION FROM 0 m TO 3.6 m WIDTH.
  STA. 7+061.63 - STA. 7+099.73 - MAINTAIN 3.6 m WIDTH.
* RIGHT TURN LANE LEFT OF CENTERLINE:
  STA. 7+135.04 - STA. 7+173.14 - MAINTAIN 3.6 m WIDTH.
  STA. 7+173.14 - STA. 7+196.00 - TRANSITION FROM 3.6 m TO 0 m WIDTH.

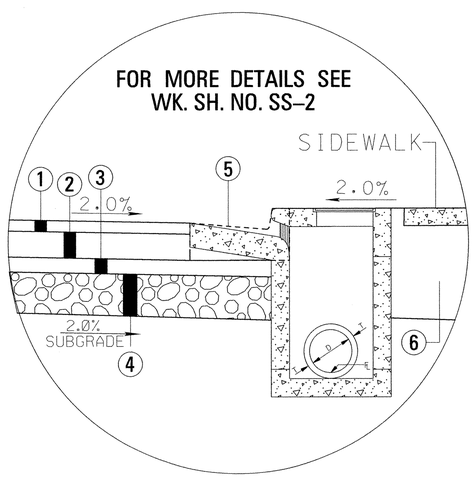

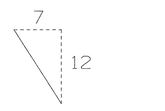

ANGLE OF REPOSE PERMITTED

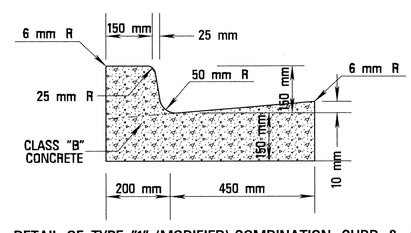

DETAIL OF TYPE "1" (MODIFIED) COMBINATION CURB & GUTTER

PROPOSED PAVEMENT

1. 50 mm HOT MIX ASPHALT, MT (12.5 mm MIX) (1 @ 50) REQ'D.
2. 110 mm HOT MIX ASPHALT, MT (19 mm MIX) (2 @ 55) REQ'D.
3. 75 mm HOT MIX ASPHALT, MT (19 mm MIX) (1 @ 75 mm) REQ'D.
4. 175 mm CRUSHED STONE REQ'D. WITH GEOTEXTILE STABILIZATION, NON-WOVEN
5. TYPE "1" (MODIFIED) CONCRETE CURB & GUTTER
6. 355 mm & VARIABLE BORROW MATERIAL (B-9) REQ'D.
7. 50 mm & VAR. HOT MIX ASPHALT, MT (12.5 mm MIX) (1 @ 50 mm) REQ'D.
8. 110 mm & VAR. HOT MIX ASPHALT, MT (19 mm MIX) (2 @ 55 mm) REQ'D.

DATE	REVISION	BY

MISSISSIPPI DEPARTMENT OF TRANSPORTATION

TYPICAL SECTIONS
HWY. 51

HWY. 51 & HWY. 4 INTERSECTION
RIGHT TURN ONLY LANES (SENATOBIA)

COUNTY: TATE
PROJECT NO.: STP-2920-00(001)

FILENAME: TS.DGN
DESIGN TEAM SUTTERFIELD CHECKED DATE

WORKING NUMBER TS-3
SHEET NUMBER 10

METRIC PLAN
ROADWAY DESIGN DIVISION
MISSISSIPPI DEPARTMENT OF TRANSPORTATION