FED. ROAD REG. NO.	STATE	PROJECT NO.	SHEET NO.
4	MISS.		1

FOR DETAILED INDEX OF PLANS SEE SHEET NO. 2

STATE OF MISSISSIPPI

MISSISSIPPI DEPARTMENT OF TRANSPORTATION

RENOVATION OF REST AREAS BUILDINGS ON I–20 IN SCOTT COUNTY

STATE PROJECT NO. BWO–5130–62(002) 501982/301000 AND BWO–5131–62(002) 501982/302000

I-20 EASTBOUND & WESTBOUND
SCOTT COUNTY

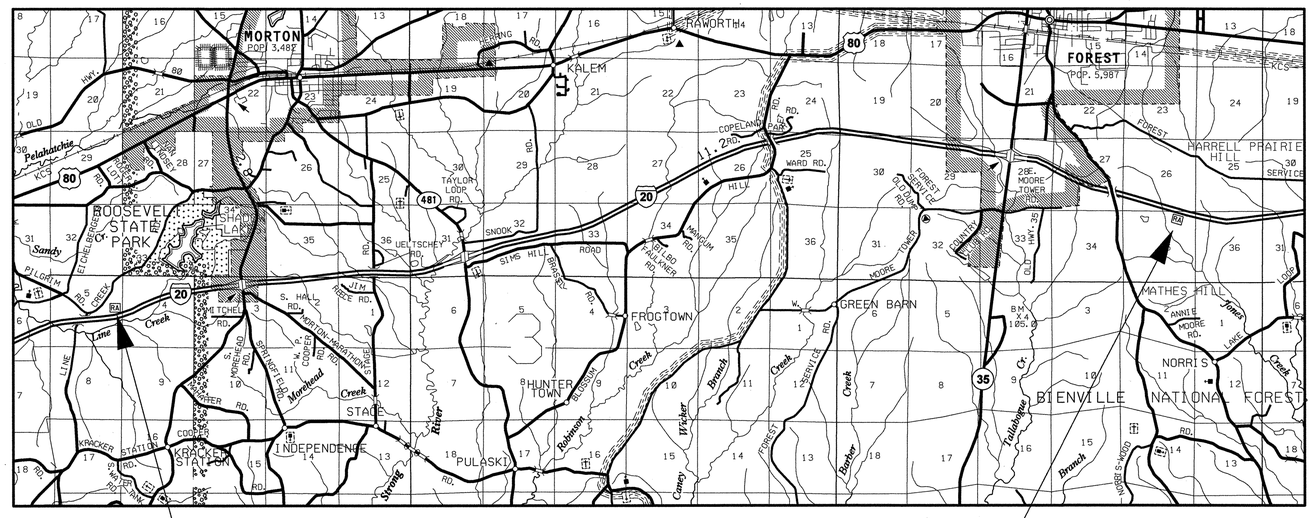

WESTBOUND (MORTON) REST AREA BWO–5130–62(002)

EASTBOUND (FOREST) REST AREA BWO–5131–62(002)

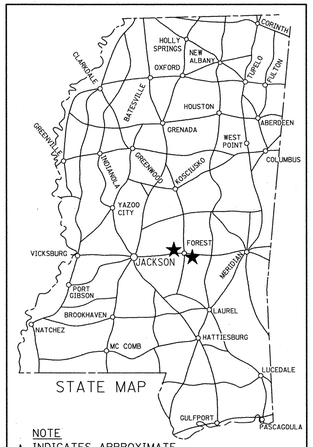

NOTE
★ INDICATES APPROXIMATE LOCATION OF PROJECT.

LATITUDE: 32.33785° N LONGITUDE: 89.55064° W
(APPROX. MIDDLE OF PROJECT)

DESIGN CONTROL

_____ MPH = V (SPEED DESIGN)

ADT (____) = _____ : ADT (____) = _____

DHV = _____ : D = _____% T = _____%

PERMITS ACQUIRED BY MDOT

WETLANDS AND WATERS PERMITS
(NECESSARY FOR ULTIMATE IMPROVEMENTS ONLY):

	WATERS	WETLANDS
NATIONWIDE #14	N	N
NATIONWIDE (OTHER)*	N	N
GENERAL*	N	N
INDIVIDUAL (404)*	N	N

* ACQUISITION OF PERMITS FOR TEMPORARY IMPACTS DURING CONSTRUCTION ARE THE RESPONSIBILITY OF THE CONTRACTOR

STORMWATER PERMIT	N
Y	REQUIRED, CNOI SUBMITTED BY MDOT (DISTRIBUTED AREA = 5 ACRES +)(NTB 586)
S	REQUIRED, SCNOI TO BE SUBMITTED BY CONTRACTOR (1 TO 4.99 ACRES)(NTB 14)
N	NO STORMWATER PERMIT REQUIRED (<1 ACRE)

APPROVED BY: JW DATE: 3-2-10

CONVENTIONAL SYMBOLS

COUNTY LINE
TOWN CORPORATION LINE
SECTION LINE
EXISTING ROAD OR TRAVELED WAY
EXISTING DIVIDED HIGHWAY
RAILROAD
SURVEY LINE
BRIDGES

REVISIONS	BY	DATE

ASU

APPROVED: 2/26/10
CHIEF ENGINEER — DATE

2/26/10
EXECUTIVE DIRECTOR — DATE

MISSISSIPPI DEPARTMENT OF TRANSPORTATION

APPROVED:

DIVISION ADMINISTRATOR — DATE

FEDERAL HIGHWAY ADMINISTRATION
DEPARTMENT OF TRANSPORTATION

TITLE
ROADWAY DESIGN DIVISION
MISSISSIPPI DEPARTMENT OF TRANSPORTATION

2/26/2010 9:44 AM G:\01 TITL.DGN

1 st O. REV.

STATE	PROJECT NO.
MISS.	BWO-5130-62(002)
	BWO-5131-62(002)

DESCRIPTION OF SHEET

DESCRIPTION OF SHEET	WKG. NO.	SH. NO.
TITLE SHEET	—	1
DETAILED INDEX	DI-1	2
PARTIAL SITE PLAN EXISTING CONDITIONS (EASTBOUND - FOREST)	A1.1	3
PARTIAL SITE PLAN EXISTING CONDITIONS (WESTBOUND - MORTON)	A1.2	4
DEMOLITION PLANS - EASTBOUND AND WESTBOUND	A1.3	5
FLOOR PLANS - EASTBOUND AND WESTBOUND	A1.4	6
REFLECTED CEILING PLANS - EASTBOUND AND WESTBOUND	A1.5	7
BUILDING ELEVATIONS (WESTBOUND - MORTON)	A2.1	8
BUILDING ELEVATIONS (EASTBOUND - FOREST)	A2.2	9
TYPICAL ROOM ELEVATIONS	A2.3	10
TYPICAL SECTIONS AND DETAIL ELEVATIONS	A4.1	11
TYPICAL DETAILS	A5.1	12
TYPICAL DOOR AND FINISH SCHEDULE	A6.1	13
TYPICAL CONCESSION BUILDING PLAN AND ELEVATIONS	A7.1	14
PLUMBING LEGEND, ABBREVIATIONS, AND GENERAL NOTES	P0.1	15
EASTBOUND SITE PLAN - PART "A" - PLUMBING	P1.0EA	16
EASTBOUND SITE PLAN - PART "B" - PLUMBING	P1.0EB	17
EASTBOUND SITE PLAN - PART "C" - PLUMBING	P1.0EC	18
EASTBOUND SITE PLAN - PART "D" - PLUMBING	P1.0ED	19
WESTBOUND SITE PLAN - PART "A" - PLUMBING	P1.0WA	20
WESTBOUND SITE PLAN - PART "B" - PLUMBING	P1.0WB	21
WESTBOUND SITE PLAN - PART "C" - PLUMBING	P1.0WC	22
WESTBOUND SITE PLAN - PART "D" - PLUMBING	P1.0WD	23
EASTBOUND & WESTBOUND DEMOLITION PLANS - PLUMBING	P1.1	24
EASTBOUND & WESTBOUND FLOOR PLANS - PLUMBING	P2.1	25
PLUMBING SCHEDULES AND RISERS	P3.1	26
HVAC LEGEND, ABBREVIATIONS, AND GENERAL NOTES	M0.1	27
FLOOR PLAN - HVAC	M2.1	28
HVAC DETAILS AND SECTIONS	M3.1	29
HVAC SCHEDULES AND ISOMETRIC LAYOUT	M4.1	30
ELECTRICAL LEGEND, ABBREVIATIONS, AND GENERAL NOTES	E0.1	31
EASTBOUND SITE PLAN - ELECTRICAL	E1.0	32
WESTBOUND SITE PLAN - ELECTRICAL	E1.1	33
TYPICAL RESTROOM FLOOR PLAN - LIGHTING	E2.1	34
TYPICAL RESTROOM FLOOR PLAN - POWER / COMMUNICATIONS	E3.1	35
ELECTRICAL DETAILS	E4.1	36
NORTH / SOUTH MODIFIED POWER RISER DIAGRAM	E4.2	37
ELECTRICAL SCHEDULES	E4.3	38

ABBREVIATIONS:

AFF	ABOVE FINISH FLOOR
BLDG	BUILDING
BOTT	BOTTOM
CJ	CONTROL JOINT
CLR	CLEAR
CONT	CONTINUOUS
DET	DETAIL
DIA	DIAMETER
(E)	EXISTING
EA	EACH
EJ	EXPANSION JOINT
ELEC	ELECTRICAL
EQL	EQUAL
ETR	EXISTING TO REMAIN
EXTR	EXTRUDED
FF	FINISH FLOOR
FT	FEET
GC	GENERAL CONTRACTOR
MECH	MECHANICAL
MET	METAL
NIC	NOT IN CONTRACT
OC	ON CENTER
PL	PLATE
REINF	REINFORCING
SCHD	SCHEDULE
TYP	TYPICAL

SYMBOL LEGEND:

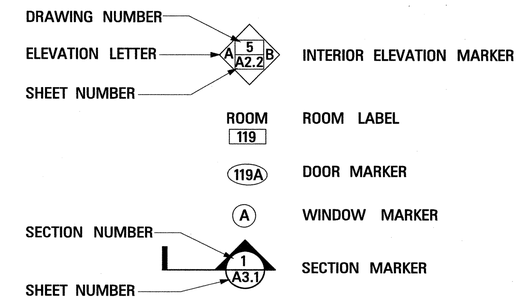

EROSION CONTROL QUANTITIES ⚠

PAY ITEM NO.	PAY ITEM	UNIT	WESTBOUND		EASTBOUND		TOTALS	
			PRELIM.	FINAL	PRELIM.	FINAL	PRELIM.	FINAL
907-225-A001	GRASSING	ACRE	1		1		2	
234-A001	TEMPORARY SILT FENCE	LF	1000		500		1500	
235-A001	TEMPORARY EROSION CHECKS	BALE	50		25		75	
907-237-A003	WATTLES, 20"	LF	250		250		500	
907-246-A001	SANDBAGS	LF	50		50		100	

THESE EROSION CONTROL ITEMS ARE REQUIRED TO MINIMIZE SILTATION ALONG NEW WATER AND SANITARY FORCE MAIN TRENCHES. CONTRACTOR SHALL SUBMIT AND IMPLEMENT EROSION CONTROL PLAN.

PS & E PLANS DATE : 3/02/10

FMS CON. #
501982/301000 & 302000

REVISIONS

DATE	SHEET NO.	BY
3/09/10	2,16,20,21,22,23	RJB,LGP

DATE	REVISION	BY
3/09/10	ADD EROSION CONTROL QUANTITIES ⚠	LGP

MISSISSIPPI DEPARTMENT OF TRANSPORTATION

RENOVATE REST AREA BUILDINGS ON I-20 IN SCOTT COUNTY

DETAILED INDEX

BWO-5130-62(002) AND BWO-5131-62(002) SCOTT COUNTY

WORKING NUMBER **DI-1**

SHEET NUMBER **2**

FILENAME: DI.DGN

DESIGN TEAM PARKER CHECKED JWV DATE 3/02/10

PLAN
ROADWAY DESIGN DIVISION
MISSISSIPPI DEPARTMENT OF TRANSPORTATION

3/12/2010 2:47 PM DI.DGN