1 st O. REV.

FOR DETAILED INDEX OF PLANS SEE SHEET NO. 2

FED. ROAD REG. NO.	STATE	PROJECT NO.	SHEET NO.
4	MISS.	BWO-5198-40(001) BWO-5199-40(001)	1

STATE OF MISSISSIPPI

MISSISSIPPI DEPARTMENT OF TRANSPORTATION

PLANS OF PROPOSED
MAINTENACE AREA HEADQUARTERS AND EQUIPMENT SHED AT CARTHAGE

STATE PROJECT NO. BWO-5198-40(001)
AND BWO-5199-40(001)

CONST. 502316/301000 ⚠

CONST. 502316/302000 ⚠

LEAKE COUNTY

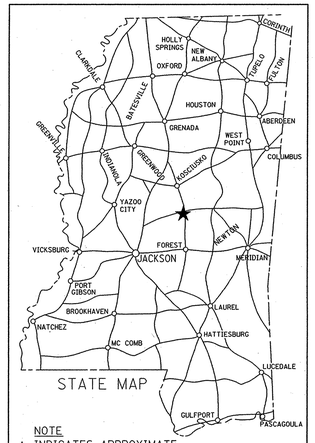

NOTE
★ INDICATES APPROXIMATE LOCATION OF PROJECT.

LAT. 32.4306 N LONG. 89.3473 W
(APPROX. MIDDLE OF PROJECT)

DESIGN CONTROL

_____ MPH = V (SPEED DESIGN)

ADT (____) =_____: ADT (____) =_____

DHV =_____ : D =_____% T=_____%

PERMITS ACQUIRED BY MDOT

WETLANDS AND WATERS PERMITS (NECESSARY FOR ULTIMATE IMPROVEMENTS ONLY):

	WATERS	WETLANDS
NATIONWIDE #14	N	N
NATIONWIDE (OTHER)*	N	N
GENERAL*	N	N
INDIVIDUAL (404)*	N	N

* ACQUISITION OF PERMITS FOR TEMPORARY IMPACTS DURING CONSTRUCTION ARE THE RESPONSIBILITY OF THE CONTRACTOR

STORMWATER PERMIT N

Y	REQUIRED, CNOI SUBMITTED BY MDOT (DISTRIBUTED AREA = 5 ACRES +)(NTB 6484)
S	REQUIRED, SCNOI TO BE SUBMITTED BY CONTRACTOR (1 TO 4.99 ACRES)(NTB 6483)
N	NO STORMWATER PERMIT REQUIRED (<1 ACRE)

APPROVED BY: JK DATE: 10/1/10

CARTHAGE COMPLEX
1579 HIGHWAY 16

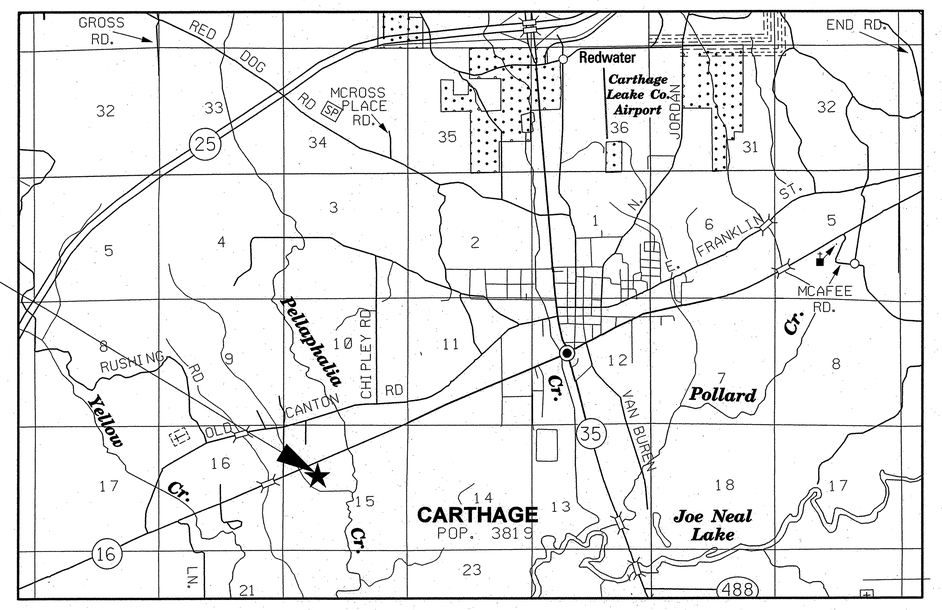

CONVENTIONAL SYMBOLS

COUNTY LINE
TOWN CORPORATION LINE
SECTION LINE
EXISTING ROAD OR TRAVELED WAY
EXISTING DIVIDED HIGHWAY
RAILROAD
SURVEY LINE
BRIDGES

DATE	REVISIONS	BY
100410	CHANGED FMS NO. 502316 TO 502316	LGP

ASU

APPROVED: _____ 10/1/10
CHIEF ENGINEER DATE

_____ 10/1/10
EXECUTIVE DIRECTOR DATE

MISSISSIPPI DEPARTMENT OF TRANSPORTATION

APPROVED:

_____ _____
DIVISION ADMINISTRATOR DATE

FEDERAL HIGHWAY ADMINISTRATION
DEPARTMENT OF TRANSPORTATION

TITLE
ROADWAY DESIGN DIVISION
MISSISSIPPI DEPARTMENT OF TRANSPORTATION

10/4/2010 9:52 AM G0071TL.DGN

1 st O. REV.

STATE	PROJECT NO.
MISS.	BWO-5198-40(001)
	BWO-5199-40(001)

DESCRIPTION OF SHEET		WKG. NO.	SH. NO.
TITLE SHEET		——	1
DETAILED INDEX AND SUMMARY OF QUANTITIES		DI-1	2
EXISTING SITE CONDITIONS		A1.0	3
SITE PLAN		A1.1	4
FLOOR PLAN - OFFICES & SHOP		A1.2	5
ROOF PLAN - OFFICES & SHOP		A1.3	6
OFFICE FLOOR PLAN & FLOOR FINISH PLAN		A1.4	7
OFFICE ROOF FRAMING PLAN & REFLECTED CEILING PLAN		A1.5	8
BUILDING ELEVATIONS		A2.1	9
INTERIOR VIEWS		A2.2	10
INTERIOR VIEWS		A2.3	11
BUILDING SECTIONS - SHOP		A3.1	12
WALL SECTIONS - OFFICES		A3.2	13
WALL SECTIONS - OFFICES		A3.3	14
CABINET SECTIONS		A4.1	15
DOOR & WINDOW DETAILS		A5.1	16
DOOR & WINDOW DETAILS		A5.2	17
SITE DETAILS		A5.3	18
SCHEDULES		A6.1	19
FOUNDATION PLAN		S1.1	20
FOUNDATION DETAILS		S1.2	21
EQUIPMENT SHED PLAN & ELEVATIONS		ES1.1	22
EQUIPMENT SHED DETAILS & SCHEDULE		ES1.2	23
EQUIPMENT SHED DETAILS & SCHEDULE		ES1.3	24
FENCE: CHAIN LINK - CLASS 1		CL-1	25
FENCE: CHAIN LINK GATE (CANTILEVER)		CG-1	26
PLUMBING LEGEND, ABBREVIATION, DETAILS AND GENERAL NOTES		P0.1	27
SITE PLAN - PLUMBING		P1.0	28
FLOOR PLAN - WASTE & VENT (MAHQ)		P2.1	29
FLOOR PLAN - WATER, GAS & COMPRESSED AIR (MAHQ)		P2.2	30
FLOOR PLAN - PLUMBING (EQUIP. SHED)		P2.3	31
ISOMETRIC RISER - WASTE & VENT (MAHQ)		P3.1	32
ISOMETRIC RISER - WATER, GAS & COMPRESSED AIR (MAHQ)		P3.2	33
PLUMBING SCHEDULES & DETAILS		P4.1	34
MECHANICAL LEGEND, ABBREVIATIONS AND GENERAL NOTES		M0.1	35
FLOOR PLAN - MECHANICAL (MAHQ)		M2.1	36
FLOOR PLAN - MECHANICAL (EQUIP. SHED)		M2.2	37
MECHANICAL DETAILS		M3.1	38
MECHANICAL DETAILS		M3.2	39
MECHANICAL SCHEDULES		M4.1	40
ELECTRICAL LEGEND, ABBREVIATIONS AND GENERAL NOTES		E0.1	41
SITE PLAN - ELECTRICAL		E1.0	42
FLOOR PLAN - LIGHTING (MAHQ)		E2.1	43
FLOOR PLAN - POWER / COMMUNICATION (MAHQ)		E2.2	44
FLOOR PLAN - ELECTRICAL (EQUIP. SHED)		E3.1	45
ELECTRICAL SCHEDULES		E4.1	46
ELECTRICAL SCHEDULES		E4.2	47
ELECTRICAL SCHEDULES		E4.3	48
ELECTRICAL SCHEDULES		E4.4	49
ELECTRICAL SCHEDULES		E4.5	50
POWER RISER DIAGRAM		E4.6	51
ELECTRICAL DETAILS		E4.7	52
ELECTRICAL DETAILS		E4.8	53

ABBREVIATIONS:

AFF	ABOVE FINISH FLOOR
BLDG	BUILDING
BOTT	BOTTOM
CJ	CONTROL JOINT
CLR	CLEAR
CONT	CONTINUOUS
DET	DETAIL
DIA	DIAMETER
(E)	EXISTING
EA	EACH
EJ	EXPANSION JOINT
ELEC	ELECTRICAL
EQL	EQUAL
ETR	EXISTING TO REMAIN
EXTR	EXTRUDED
FC	FACE OF COLUMN OR CURB
FD	FLOOR DRAIN
FFL	FINISH FLOOR
FT	FEET
GC	GENERAL CONTRACTOR
MECH	MECHANICAL
MET	METAL
NIC	NOT IN CONTRACT
OC	ON CENTER
PL	PLATE
REINF	REINFORCING
SCHD	SCHEDULE
TYP	TYPICAL

SYMBOL LEGEND:

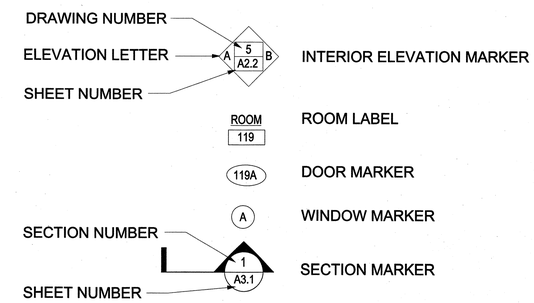

GENERAL NOTE:

IF THE CONTRACTOR, IN THE COURSE OF THE WORK, FINDS OR SUSPECTS ANY DISCREPANCY BETWEEN THE DRAWINGS AND THE PHYSICAL CONDITIONS OF THE SITE OR WORK OR ANY ERRORS OR OMMISSIONS IN THE CONTRACT DOCUMENTS OR SPECIFICATIONS, HE SHALL IMMEDIATELY NOTIFY THE PROJECT ENGINEER, AND THE PROJECT ENGINEER SHALL PROMPTLY VERIFY THE SAME. ANY WORK DONE AFTER SUCH DISCOVERY, UNLESS AUTHORIZED, SHALL BE DONE AT THE CONTRACTOR'S RISK.

PROJECT SUMMARY OF QUANTITIES

PAY ITEM NO.	DESCRIPTION	UNIT	PRELIM.	FINAL
1500-A	MAINTENANCE AREA HEADQUARTERS BUILDING	LUMP SUM	L. S.	
1500-B	EQUIPMENT SHED WITH ENCLOSED STORAGE BAY	LUMP SUM	L. S.	
607-B009	72" TYPE 1 CHAIN LINK FENCE, CLASS I, w/ TOP GUARD	LIN. FT.	430	
607-G001	GATE, 24' x 6' DOUBLE CHAIN LINK, CANTILEVER, w/ TOP GUARD	EACH	1	
607-G039	GATE, 6' x 6' CHAIN LINK	EACH	1	
607-P1009	LINE POST, 9'-0" x 2" GALV. STEEL	EACH	43	
607-P2021	BRACE POST, 9'-6" x 2 1/2" GALV. STEEL	EACH	7	
607-P3020	GATE POST, 11'-0" x 3 1/2" GALV. STEEL	EACH	3	
607-P3003	GATE POST, 8'-0" x 2 1/2" GALV. STEEL	EACH	2	

NOTE:

1. POST ALTERNATES SHOWN ON FENCING DWGS CL-1 AND CG-1 ARE NOT APPLICABLE FOR THIS PROJECT.

PS & E PLANS-DATE: 10/01/10		
FMS CON. # 502316 / 301000 & 502316 / 302000		
REVISIONS		
DATE	SHEET NO.	BY
10/04/10	1	LGP

REVISION BY DATE

MISSISSIPPI DEPARTMENT OF TRANSPORTATION

MAINTENANCE AREA HEADQUARTERS AND EQUIPMENT SHED AT CARTHAGE

DETAILED INDEX AND SUMMARY OF QUANTITIES

BWO-5198-40(001) AND
BWO-5199-40(001) LEAKE COUNTY

WORKING NUMBER **DI-1**

FILENAME: DI-1.DGN

DESIGN TEAM BLL/ABK CHECKED JWV DATE 9/27/10

SHEET NUMBER **2**

PLAN
ROADWAY DESIGN DIVISION
MISSISSIPPI DEPARTMENT OF TRANSPORTATION
10/5/2010 10:03AM DI-1.DGN