SECTION 905 -- PROPOSAL (CONTINUED)

I (We) hereby certify by execution of the Section 905 proposal below, that all certifications, disclosures and affidavits incorporated herein are deemed to be duly executed in the aggregate, fully enforceable and binding upon delivery of the bid proposal. I (We) further acknowledge that this certification shall not extend to the bid bond or alternate security which must be separately executed for the benefit of the Commission. This signature does not cure deficiencies in any required certifications, disclosures and/or affidavits. I (We) also acknowledge the right of the Commission to require full and final execution on any certification, disclosure or affidavit contained in the proposal at the Commission's election upon award. Failure to so execute at the Commission's request within the time allowed in the Standard Specifications for execution of all contract documents will result in forfeiture of the bid bond or alternate security.

Bidder acknowledges receipt of and has added to and made a part of the proposal and contract documents the following addendum (addenda):

ADDENDUM NO.	1	DATED	1/20/2016	ADDENDUM NO.		DATED	
ADDENDUM NO		DATED		ADDENDUM NO.		DATED	

Number	Description
1	Revised Table of Contents; Revised NTB No. 5916; Add NTB Nos. 5921 & 6016; Revised BidItems; Progress Schedule; Revised or Added Plan Sheet Nos. 2, 11, 12, 8001, 8004, 8009, 8010, 8019, 8021, 8049, 8050, & 8052; Amendment EBS Download Required.

TOTAL ADDENDA: 1
(Must agree with total addenda issued prior to opening of bids)

Respectfully Submitted,

DATE _____

_____
Contractor

BY _____
Signature

TITLE _____

ADDRESS _____

CITY, STATE, ZIP _____

PHONE _____

FAX _____

E-MAIL _____

(To be filled in if a corporation)

Our corporation is chartered under the Laws of the State of _____ and the names, titles and business addresses of the executives are as follows:

_____
President Address

_____
Secretary Address

_____
Treasurer Address

The following is my (our) itemized proposal.

MISSISSIPPI DEPARTMENT OF TRANSPORTATION
TABLE OF CONTENTS

PROJECT: EXB-0051-02(021) / 102383301 - Tallahatchie

Section 901 - Advertisement

Section 904 - Notice to Bidders

#1	Governing Specifications
#3	Final Cleanup
#6	Quantity for Fillet Concrete
#640	Fiber Reinforced Concrete
#1405	Errata & Modifications to 2004 Standard Specifications
#1727	Railway-Highway Provision, w/ Supplement
#1928	Federal Bridge Formula
#2382	Status of ROW, w/ Attachments
#3131	Temporary Traffic Paint
#3581	Storm Water Discharge Associated with Construction Activity (> 5 Acres)
#3612	Additional Erosion Control Requirements
#3893	Petroleum Products Base Price
#4084	Stay-In-Place Metal Forms
#4189	Rumble Stripe
#4214	Safety Apparel
#4473	Alternate Crushed Stone Base Bid Items
#4526	Electronic Addendum Process
#4565	Manual on Uniform Traffic Control Devices (MUTCD)
#4740	Illinois Central Construction Requirements
#5044	Questions Regarding Bidding
#5053	Contractor Correspondence
#5193	Temporary Steel Bracing
#5194	Intermediate Diaphragms
#5252	Terminal End Sections
#5405	Traffic Control Devices
#5412	Weight Limits
#5824	Adjustments for Bituminous Materials
#5865	Non-Quality Control / Quality Assurance Concre
#5866	Payroll Requirements
#5916	Contract Time
#5917	Additional Construction Requirements
#5918	Project Number Change
#5919	Seismic Piling
#5920	Placement of Fill Material in Federally Regulated Areas
#5921	Contract Modifications
#6016	Restricted Area

Section 907 - Special Provisions

907-101-4	Definitions
907-102-12	Bidding Requirements and Conditions
907-103-11	Award and Execution

907-104-5	Scope of Work
907-104-6	Partnering Process
907-105-8	Control of Work
907-107-13	Legal Relations and Responsibility to Public, w/Supplement
907-107-14	Contractor's Protection Plan, w/ Supplement
907-108-37	Prosecution and Progress, w/ Supplement
907-109-8	Measurement and Payment
907-207-4	Settlement Plate
907-216-1	Solid Sodding
907-225-4	Grassing
907-226-3	Temporary Grassing
907-227-10	Hydroseeding
907-237-4	Wattles
907-245-2	Triangular Silt Dikes
907-246-3	Sandbags & Rockbags
907-247-2	Temporary Stream Diversion
907-249-1	Riprap for Erosion Control
907-252-2	Vibrating Wire Piezometer
907-253-1	Coir Fiber Baffle
907-304-13	Granular Courses
907-401-7	Asphalt Pavements
907-403-14	Asphalt Pavements
907-406-4	Cold Milling
907-407-2	Tack Coat
907-413-5	Sawing & Sealing Transverse Joints in Asphalt Pavement
907-601-1	Structural Concrete
907-603-8	Culverts & Storm Drains
907-617-3	Right-Of-Way Markers
907-618-8	Construction and Removal of Detour
907-626-25	Thermoplastic Traffic Markings
907-699-5	Construction Stakes
907-701-5	Hydraulic Cement, w/ Supplement
907-702-5	Specifications for Bituminous Materials
907-703-12	Aggregates, w/ Supplement
907-708-6	Non-Metal Drainage Structures
907-709-1	Metal Pipe
907-710-1	Fast Dry Solvent Traffic Paint
907-711-4	Synthetic Structural Fiber Reinforcement
907-713-5	Admixtures for Concrete
907-714-8	Miscellaneous Materials
907-715-4	Roadside Development Materials
907-720-2	Pavement Marking Materials
907-804-19	Concrete Bridges and Structures
907-815-2	Sediment Control Stone
907-899-2	Railway-Highway Provisions

Section 905 - Proposal, Proposal Bid Items, Combination Bid Proposal
State Board of Contractors Requirement

PROJECT: EXB-0051-02(021) / 102383301 - Tallahatchie

State Certification Regarding Non-Collusion, Debarment and Suspensions
Section 902 - Contract Form
Section 903 - Contract Bond Forms

Pile Data Form
Progress Schedule

(REVISIONS TO THE ABOVE WILL BE INDICATED ON THE SECOND SHEET
OF SECTION 905 AS ADDENDA)

01/22/2016 09:21 AM

MISSISSIPPI DEPARTMENT OF TRANSPORTATION

SECTION 904 - NOTICE TO BIDDERS NO. 5916 **CODE: (SP)**

DATE: **1/21/2016**

SUBJECT: **Contract Time**

PROJECT: **EXB-0051-02(021) 102383301– Tallahatchie County**

The completion of work to be performed by the Contractor for this project will not be a specified date but shall be when all allowable working days are assessed, or any extension thereto as provided in Subsection 907-108.06. It is anticipated that the Notice to Award will be issued no later than ***February 9, 2016*** and the date for Notice to Proceed / Beginning of Contract Time will be ***April 11, 2016***.

Should the Contractor request a Notice to Proceed earlier than ***April 11, 2016*** and it is agreeable with the Department for an early Notice to Proceed, the requested date will become the new Notice to Proceed / Beginning of Contract Time date.

393 Working Days have been allowed for the completion of work on this project.

The 180 calendar days, for embankment consolidation have been included within the contract time.

MISSISSIPPI DEPARTMENT OF TRANSPORTATION

SECTION 904 - NOTICE TO BIDDERS NO. 5921 **CODE: (SP)**

DATE: **01/21/2016**

SUBJECT: **Contract Modifications**

PROJECT: **EXB-0051-02(021) 102383301– Tallahatchie County**

Bidders are advised of the following changes regarding pay items:

- The Summary of Quantities sheets in the Plans reference pay item 907-803-P002, 30" Steel Pipe Piling, Wall Thickness 0.500". This is in error. Payment for the Steel Pipe Piles shall be made using pay item 907-803-PP002, 30" Steel Pipe Piling, Wall Thickness 0.500" with a quantity of 855 L.F. The bid items have been corrected to reflect this change.

MISSISSIPPI DEPARTMENT OF TRANSPORTATION

SECTION 904 – NOTICE TO BIDDERS NO. 6016

DATE: **1/21/2016**

SUBJECT: **Restricted Area**

PROJECT: **EXB-0051-02(021) / 102383301– Tallahatchie County**

Bidders are hereby advised of the following Restricted Area on the project:

Station 183+00 LT to Station 295+00 LT

The above area is restricted until May 1, 2016 for utility work. Upon written notification by the Engineer, the Contractor may be allowed earlier access.

No extension of contract time will be considered for this non-access unless the restriction extends beyond ***May 1, 2016***.

Bridge Replacement on SR 32 between Webb & Charleston, known as State Project No. EXB-0051-02(021) / 102383301 in Tallahatchie County.

Line No.	Item Code	Adj Code	Quantity	Units	Description [Fixed Unit Price]
				Roadway Items	
0010	201-A001		1	Lump Sum	Clearing and Grubbing
0020	201-B001		3	Acre	Clearing and Grubbing
0030	202-A001		1	Lump Sum	Removal of Obstructions
0040	202-B064		193	Linear Feet	Removal of Pipe, 8" And Above
0050	202-B070		31	Each	Removal of Sign Including Post & Footing
0060	202-B076		8,106	Linear Feet	Removal of Traffic Stripe
0070	202-B078		22,225	Square Yard	Removal of Pavement, All Types and Depths
0080	202-B134		2,870	Linear Feet	Removal of Guard Rail, Including Rails & Posts
0090	203-A003	(E)	47,719	Cubic Yard	Unclassified Excavation, FM, AH
0100	203-EX017	(E)	460,495	Cubic Yard	Borrow Excavation, AH, FME, Class B9
0110	203-G004	(E)	25,386	Cubic Yard	Excess Excavation, LVM, AH
0120	206-A001	(S)	630	Cubic Yard	Structure Excavation
0130	206-B001	(E)	46	Cubic Yard	Select Material for Undercuts, Contractor Furnished, FM
0140	209-A004		35,939	Square Yard	Geotextile Stabilization, Type V, Non-Woven
0150	213-C001		23	Ton	Superphosphate
0160	217-A001		2,071	Square Yard	Ditch Liner
0170	219-A001		7	Thousand Gallon	Watering [$20.00]
0180	220-A001		23	Acre	Insect Pest Control [$30.00]
0190	221-A001	(S)	38	Cubic Yard	Portland Cement Concrete Paved Ditch
0200	223-A001		92	Acre	Mowing [$50.00]
0210	224-A001		3,935	Square Yard	Soil Reinforcing Mat
0220	234-A001		20,000	Linear Feet	Temporary Silt Fence
0230	236-A004		9	Each	Silt Basin, Type D
0240	239-A001		921	Linear Feet	Temporary Slope Drains
0250	408-A003	(A3)	1,647	Gallon	Asphalt for Prime Coat, Cut-Back MC-70 or Emulsified EA-1
0260	423-A001		4	Mile	Rumble Strips, Ground In
0270	502-A001	(C)	859	Square Yard	Reinforced Cement Concrete Bridge End Pavement
0280	602-A001	(S)	42,983	Pounds	Reinforcing Steel
0290	603-CA003	(S)	272	Linear Feet	24" Reinforced Concrete Pipe, Class III
0300	603-CA005	(S)	40	Linear Feet	36" Reinforced Concrete Pipe, Class III
0310	603-CA006	(S)	232	Linear Feet	42" Reinforced Concrete Pipe, Class III
0320	603-CB002	(S)	6	Each	24" Reinforced Concrete End Section
0330	603-CB004	(S)	2	Each	36" Reinforced Concrete End Section

Line No.	Item Code	Adj Code	Quantity	Units	Description [Fixed Unit Price]
0340	603-CB005	(S)	4	Each	42" Reinforced Concrete End Section
0350	606-B001		1,700	Linear Feet	Guard Rail, Class A, Type 1
0360	606-D012		16	Each	Guard Rail, Bridge End Section, Type I
0370	606-E002		16	Each	Guard Rail, Terminal End Section, Flared
0380	609-D002	(S)	555	Linear Feet	Combination Concrete Curb and Gutter Type 2
0390	610-A001		79,200	Linear Feet	Drainage Wicks
0400	615-A018	(S)	160	Linear Feet	Concrete Bridge End Barrier, 33.5"
0410	619-A1003		31,343	Linear Feet	Temporary Traffic Stripe, Continuous White, Paint
0420	619-A2003		16,389	Linear Feet	Temporary Traffic Stripe, Continuous Yellow, Paint
0430	619-A4001		12,012	Linear Feet	Temporary Traffic Stripe, Skip Yellow
0440	619-A5002		5,241	Linear Feet	Temporary Traffic Stripe, Detail, Paint
0450	619-A6003		1,482	Linear Feet	Temporary Traffic Stripe, Legend, Paint
0460	619-D1001		250	Square Feet	Standard Roadside Construction Signs, Less than 10 Square Feet
0470	619-D2001		1,086	Square Feet	Standard Roadside Construction Signs, 10 Square Feet or More
0480	619-G4001		348	Linear Feet	Barricades, Type III, Single Faced
0490	619-G4005		24	Linear Feet	Barricades, Type III, Double Faced
0500	619-G5001		120	Each	Free Standing Plastic Drums
0510	619-G7001		6	Each	Warning Lights, Type "B"
0520	620-A001		1	Lump Sum	Mobilization
0530	627-L001		259	Each	Two-Way Yellow Reflective High Performance Raised Markers
0540	630-A001		104	Square Feet	Standard Roadside Signs, Sheet Aluminum, 0.080" Thickness
0550	630-A002		62	Square Feet	Standard Roadside Signs, Sheet Aluminum, 0.125" Thickness
0560	630-C003		390	Linear Feet	Steel U-Section Posts, 3.0 lb/ft
0570	630-F001		72	Each	Delineators, Guard Rail, White
0580	815-A009	(S)	1,164	Ton	Loose Riprap, Size 300
0590	815-E001	(S)	203	Square Yard	Geotextile under Riprap
0600	907-207-A001		16	Each	Settlement Plate
0610	907-216-A001		374	Square Yard	Solid Sodding
0620	907-225-A001		46	Acre	Grassing
0630	907-225-B001		23	Ton	Agricultural Limestone
0640	907-225-C001		92	Ton	Mulch, Vegetative Mulch
0650	907-226-A001		46	Acre	Temporary Grassing
0660	907-237-A003		1,200	Linear Feet	Wattles, 20"

Line No.	Item Code	Adj Code	Quantity	Units	Description [Fixed Unit Price]
0670	907-245-A001		724	Linear Feet	Triangular Silt Dike
0680	907-246-A001		1,447	Linear Feet	Sandbags
0690	907-247-A001		1	Each	Temporary Stream Diversion
0700	907-249-A001		724	Ton	Riprap for Erosion Control
0710	907-252-A001		2	Each	VW Piezometer
0720	907-253-A001		1,028	Linear Feet	Coir Fiber Baffle
0730	907-304-B009	(GT)	19,800	Ton	Granular Material, Class 3, Group D
0740	907-403-A017	(BA1)	3,578	Ton	9.5-mm, ST, Asphalt Pavement
0750	907-403-A018	(BA1)	4,169	Ton	12.5-mm, ST, Asphalt Pavement
0760	907-403-A019	(BA1)	3,881	Ton	19-mm, ST, Asphalt Pavement
0770	907-406-A001		800	Square Yard	Cold Milling of Bituminous Pavement, All Depths
0780	907-407-A001	(A2)	3,523	Gallon	Asphalt for Tack Coat
0790	907-413-E001		391	Linear Feet	Sawing and Sealing Transverse Joints in Asphalt Pavement
0800	907-601-B003	(S)	3	Cubic Yard	Class "B" Structural Concrete, Minor Structures
0810	907-603-ALT01	(S)	848	Linear Feet	18" Type A Alternate Pipe
0820	907-603-ALT02	(S)	168	Linear Feet	24" Type A Alternate Pipe
0830	907-617-A001		24	Each	Right-of-Way Marker
0840	907-618-A001		1	Lump Sum	Maintenance of Traffic
0850	907-626-C004		5	Mile	6" Thermoplastic Edge Stripe, Continuous White
0860	907-626-D003		2	Mile	6" Thermoplastic Traffic Stripe, Skip Yellow
0870	907-626-E004		3	Mile	6" Thermoplastic Traffic Stripe, Continuous Yellow
0880	907-626-G004		2,641	Linear Feet	Thermoplastic Detail Stripe, White
0890	907-626-H004		494	Linear Feet	Thermoplastic Legend, White
0900	907-699-A002		1	Lump Sum	Roadway Construction Stakes
0910	907-804-B001	(S)	387	Cubic Yard	Box Bridge Concrete, Class B
0920	907-815-F001	(S)	175	Ton	Sediment Control Stone
0930	907-899-A001		1	Lump Sum	Railway-Highway Provisions
			ALTERNATE GROUP AA NUMBER 1		
0940	907-304-F002	(GT)	13,200	Ton	Size 610 Crushed Stone Base
			ALTERNATE GROUP AA NUMBER 2		
0950	907-304-F003	(GT)	13,200	Ton	3/4" and Down Crushed Stone Base
			ALTERNATE GROUP AA NUMBER 3		
0960	907-304-F004	(GT)	13,200	Ton	Size 825B Crushed Stone Base
			Bridge Items		

Line No.	Item Code	Adj Code	Quantity	Units	Description [Fixed Unit Price]
0970	501-K001		3,385	Square Yard	Transverse Grooving
0980	803-B002	(S)	4	Each	Conventional Static Pile Load Test [$5,000.00]
0990	803-C004	(S)	1,280	Linear Feet	18" x 18" Prestressed Concrete Piling
1000	803-D006	(S)	5,905	Linear Feet	HP 14 x 117 Steel Piling
1010	803-D008	(S)	1,400	Linear Feet	HP 16 x 121 Steel Piling
1020	803-I002	(S)	2	Each	PDA Test Pile, Concrete Pile
1030	803-I003	(S)	9	Each	PDA Test Pile, HP Steel Pile
1040	803-I004	(S)	2	Each	PDA Test Pile, Steel Pipe Pile
1050	803-J001	(S)	8	Each	Pile Restrike
1060	805-A001	(S)	305,348	Pounds	Reinforcement
1070	813-A002	(S)	1,918	Linear Feet	Concrete Railing, 32"
1080	815-A009	(S)	6,976	Ton	Loose Riprap, Size 300
1090	815-D001	(S)	131	Cubic Yard	Concrete Slope Paving
1100	815-E001	(S)	3,755	Square Yard	Geotextile under Riprap
1110	907-607-PP019		270	Linear Feet	Safety Fence, Per Plans
1120	907-803-PP002	(S)	1	Lump Sum	30" Steel Pipe Piling, Wall Thickness 0.500"
1130	907-804-A018	(S)	586	Cubic Yard	Bridge Concrete, Substructure, Class AA
1140	907-804-A019	(S)	1,036	Cubic Yard	Bridge Concrete, Superstructure, Class AA
1150	907-804-C012	(S)	671	Linear Feet	135' Prestressed Concrete Beam, Type BT-72
1160	907-804-C016	(S)	2,560	Linear Feet	40' Prestressed Concrete Beam, Type I+2
1170	907-804-C027	(S)	477	Linear Feet	96' Prestressed Concrete Beam, Type BT-72
1180	907-804-C171	(S)	499	Linear Feet	100' Prestressed Concrete Beam, Type IV
1190	907-804-C272		502	Linear Feet	101' Prestressed Concrete Beam, Type BT-72

FORM CSD-612
Rev. 1 / 2015

YEAR 2016 PROGRESS SCHEDULE YEAR 2017

PROJECT NUMBER EXB-0051-02(021) / 102383301
COUNTY Tallahatchie

WORK PHASE NO.	DESCRIPTION	LINE NUMBERS	JAN	FEB	MAR	APRIL	MAY	JUNE	JULY	AUGUST	SEPTEMBER	OCTOBER	NOV	DEC	JAN	FEB	MAR	APRIL	MAY	JUNE	JULY	AUGUST	SEPTEMBER	OCTOBER	NOV	DEC	
1	Miscellaneous	10-80, 150-240, 260, 350-380, 410-700, 720, 860-870, 930, 950-960				0																					315
2	Excavation & Drainage	90-140, 290-340, 390, 710, 830-850, 940				5							138														
																									301		
3	Bridge	400, 970-1190				10				86											242						310
4	Base & Paving	250, 270-280, 730-820																						297			310
5	Permanent Stripe	880-920																									
		Year 2018																									
1	Miscellaneous	315							393																		
2	Excavation & Drainage			328				380																			
3	Bridge			328					390																		
4	Base & Paving							390	393																		
5	Permanent Stripe																										
	LET:	01/26/2016																									
	NOA:	02/09/2016																									
	NTP/BCT:	04/11/2016																									
	W.D.:	393																									
MONTH			JAN	FEB	MAR	APRIL	MAY	JUNE	JULY	AUGUST	SEPTEMBER	OCTOBER	NOV	DEC	JAN	FEB	MAR	APRIL	MAY	JUNE	JULY	AUGUST	SEPTEMBER	OCTOBER	NOV	DEC	172 WORKING DAYS PER YEAR
ANTICIPATED WORKING DAYS PER MONTH			6	7	11	15	19	20	21	21	20	16	11	5	6	7	11	15	19	20	21	21	20	16	11	5	

NOTE: THE ANTICIPATED WORKING DAYS SHOWN ON THIS SCHEDULE ARE FOR INFORMATIONAL PURPOSES ONLY.
THE ACTUAL WORKING DAY TOTAL AS ASSESSED BY THE PROJECT ENGINEER ON FORM CSD-765 SHALL GOVERN.

FMS CON: 102383/301000

ADDENDUM

STATE	PROJECT NO.
MISS.	EXB-0051-02(021)

DESCRIPTION OF SHEET	WKG. NO.	SH. NO.
TITLE SHEET (1)		1
DETAILED INDEX & GENERAL NOTES (4)		
DETAILED INDEX	DI-1	2
DETAILED INDEX	DI-2	3
GENERAL NOTES	GN-1	4
GENERAL NOTES	GN-2	5
TYPICAL SECTION SHEETS (5)		
TYPICAL SECTION - NEW CONSTRUCTION / WIDENING & OVERLAY	TS-1	6
TYPICAL SECTION - NEW CONSTRUCTION / OVERLAY & REMOVAL OF EXISTING EXBANKMENT	TS-2	7
TYPICAL SECTION - LOCAL ROADS AND NON-CHANNELIZED INTERSECTIONS	TS-3	8
TYPICAL SECTION - PAVEMENT DEPTH @ BRIDGE ENDS & DRIVEWAYS	TS-4	9
TYPICAL SECTION - MISCELLANEOUS DETAILS	TS-5	10
QUANTITY SHEETS (14)		
SUMMARY OF QUANTITIES	SQ-1	11
SUMMARY OF QUANTITIES	SQ-2	12
SUMMARY OF QUANTITIES	SQ-3	13
ESTIMATED QUANTITIES - SUMMARY OF REMOVAL ITEMS	EQ-1	14
ESTIMATED QUANTITIES - SUMMARY OF REMOVAL ITEMS	EQ-2	15
ESTIMATED QUANTITIES - SUMMARY OF DRAINAGE STRUCTURES	EQ-3	16
ESTIMATED QUANTITIES - SUMMARY OF TRAFFIC CONTROL ITEMS REQUIRED	EQ-4	17
ESTIMATED QUANTITIES - SUMMARY OF TRAFFIC CONTROL ITEMS REQUIRED	EQ-5	18
ESTIMATED QUANTITIES - EARTHWORK	EQ-6	19
ESTIMATED QUANTITIES - DRIVEWAYS/RAMPS & SIDEDRAINS	EQ-7	20
ESTIMATED QUANTITIES - BOX CULVERTS REQUIRED	EQ-8	21
ESTIMATED QUANTITIES - COMBINATION CONCRETE CURB AND GUTTER REQ'D.	EQ-9	22
ESTIMATED QUANTITIES - PERMANENT SIGNING	EQ-10	23
ESTIMATED QUANTITIES FOR TRAFFIC CONTROL SIGNS	TCP-Q	24
PLAN & PROFILE SHEETS (12)		
STA. 183+00 TO STA. 195+00 (S.R. 32)	3	25
STA. 10+00 TO STA. 12+10 (ALBIN MIKOMA RD.)	3A	26
STA. 195+00 TO STA. 225+00 (S.R. 32)(PLAN)	4	27
STA. 195+00 TO STA. 225+00 (S.R. 32)(PROFILE)	4A	28
STA. 30+00 & STA. 42+23.806 (ACCESS RD.)(PROFILE)	4B	29
STA. 101+00TO STA. 121+00 (ILLINOIS CENTRAL RAILROAD)	4C	30
STA. 225+00 TO STA. 255+00 (S.R. 32)	5	31
STA. 225+00 TO STA. 255+00 (S.R. 32 EARTHWORK)	5EW	32
STA. 255+00 TO STA. 285+00 (S.R. 32)	6	33
STA. 255+00 TO STA. 285+00 (S.R. 32 EARTHWORK)	6EW	34
STA. 10+00 TO STA. 12+20 (FLAUTT RD.)	6A	35
STA. 285+00 TO STA. 295+00 (S.R. 32)	7	36
SPECIAL DESIGN SHEETS - ROADWAY DRAWINGS (66)		
INTERSECTION DETAIL - S.R. 32 / ALBIN MIKOMA RD. (STA. 186+50.627)	ID-1	37
INTERSECTION DETAIL - S.R. 32 / ACCESS RD. (STA. 206+00.000)	ID-2	38
INTERSECTION DETAIL - S.R. 32 / FLAUTT RD. (STA. 260+58.000)	ID-3	39
PRELIMINARY EROSION CONTROL PLAN	ECP3	40
PRELIMINARY EROSION CONTROL PLAN	ECP3A	41
PRELIMINARY EROSION CONTROL PLAN	ECP4	42
PRELIMINARY EROSION CONTROL PLAN	ECP4A	43
PRELIMINARY EROSION CONTROL PLAN	ECP4B	44
PRELIMINARY EROSION CONTROL PLAN	ECP4C	45
PRELIMINARY EROSION CONTROL PLAN	ECP5	46
PRELIMINARY EROSION CONTROL PLAN	ECP6	47
PRELIMINARY EROSION CONTROL PLAN	ECP6A	48
PRELIMINARY EROSION CONTROL PLAN	ECP7	49
TRAFFIC CONTROL - PHASE I	TC-1	50
TRAFFIC CONTROL - PHASE I	TC-2	51
TRAFFIC CONTROL - PHASE I	TC-3	52
TRAFFIC CONTROL - PHASE II (PM2A)	TC-4	53
TRAFFIC CONTROL - PHASE II (PM2A)	TC-5	54
TRAFFIC CONTROL - PHASE II (PM2A)	TC-6	55
TRAFFIC CONTROL - PHASE II (PM2B & PM2C)	TC-7	56
TRAFFIC CONTROL - PHASE II (PM2B & PM2C)	TC-8	57
TRAFFIC CONTROL - PHASE II (PM2B & PM2C)	TC-9	58
PAVEMENT MARKING DETAIL - S.R. 32 / ALBIN MIKOMA RD. (STA. 186+50.627)	PMD-1	59
PAVEMENT MARKING DETAIL - S.R. 32 / ACCESS RD. (STA. 206+00.000)	PMD-2	60
PAVEMENT MARKING DETAIL - S.R. 32 / FLAUTT RD. (STA. 260+58.000)	PMD-3	61
VEGETATION SCHEDULE	VS-1	62
BRIDGE END PAVEMENT RAIL	BEPR-1B	63
BRIDGE END SECTION TYPE "I" (STEEL POSTS)	GR-2G	64
BRIDGE END SECTION TYPE "I" (WOOD POSTS)	GR-2F	65
BRIDGE END PAVEMENT (WITH RAIL, OVERLAY, AND SLEEPER SLAB)	BEPR-SS	66
RUB RAIL HARDWARE SHEET	GR-RR	67
TYPICAL TEMPORARY EROSION SEDIMENT CONTROL APPLICATIONS	ECD-1	68
DETAILS OF SEDIMENT BARRIER APPLICATIONS	ECD-2	69
DETAILS OF SILT FENCE INSTALLATION	ECD-3	70
DITCH CHECK STRUCTURES, TYPICAL APPLICATIONS AND DETAILS	ECD-4	71
TEMPORARY EROSION, SILT FENCE AND HAY BALE DITCH CHECKS	ECD-5	72
DETAILS OF EROSION CONTROL WATTLE DITCH CHECKS	ECD-6	73
DETAILS OF EROSION CONTROL SILT DIKE DITCH CHECK	ECD-7	74
ROCK DITCH CHECK	ECD-8	75
ROCK FILTER DAM	ECD-9	76
ROCK DITCH CHECK WITH SLUMP EXCAVATION AND ROCK FILTER DAM	ECD-10	77
INLET PROTECTION TYPICAL APPLICATIONS AND DETAILS	ECD-11	78
INLET PROTECTION DETAILS FOR COURSE AGGREGATE ON GRADES & SAGS	ECD-12	79
INLET PROTECTION DETAILS OF WATTLES	ECD-13	80
INLET PROTECTION DETAILS OF MANUFACTURED INLET PROTECTION DEVICE	ECD-14	81
INLET PROTECTION DETAILS OF SAND BAG	ECD-15	82
STABILIZED CONSTRUCTION ENTRANCE	ECD-16	83
TEMPORARY CULVERT STREAM CROSSING	ECD-17	84
TEMPORARY STREAM DIVERSION	ECD-18	85
TEMPORARY STREAM DIVERSION (BOX EXTENSIONS)	ECD-19	86
FLOATING TURBIDITY CURTAIN	ECD-20	87
DETAILS OF EROSION CONTROL SANDBAG DITCH CHECK	ECD-21	88
SEDIMENT RETENTION BARRIER	ECD-22	89
DETAILS OF DITCH TREATMENT	DT-1	90
DITCH TREATMENT - INSTALLATION DETAIL FOR SOIL REINFORCING MAT	DT-1A	91
TYPICAL TEMPORARY EROSION CONTROL MEASURES (SLOPE DRAIN AND TYPE A SILT BASIN)	TEC-2	92
TYPICAL TEMPORARY EROSION CONTROL MEASURES (TYPE B SILT BASIN)	TEC-3	93
TYPICAL TEMPORARY EROSION CONTROL MEASURES (TYPE "D" SILT BASIN)	TEC-D	94
TRAFFIC CONTROL DETAIL OF DRUM PLACEMENT AND SHOULDER	TCP-SC	95
LOCATION OF R16-3 SIGNS	R16-3	96
RIGHT OF WAY MARKER	RW-1	97
RIGHT OF WAY MARKER COORDINATES	RWC-1	98
RUMBLE STRIPE (GROUND-IN) - FOR 2-LANE HIGHWAYS	RS-2L	99
SUPERELEVATION RUNOFF CASE I ROTATION ABOUT CENTERLINE	SDRO-1	100
SUPERELEVATION CASE I ROTATION ABOUT CENTERLINE (2% NORMAL SUBGRADE)	SDSE-2A	101
HIGHWAY SIGNS AND BARRICADE DETAIL FOR CONSTRUCTION PROJECT	SDTCP-10	102
DRIVEWAYS, CURB & GUTTER & SIDEWALK	SDSD-1	103

ROBERTS (102383/301000)

PS & E PLANS – DATE (11/30/2015)		
REVISIONS		
DATE	SHEET NO.	BY
12/17/2015	11 & 12	BJR
01/13/2016	12	BJR

MISSISSIPPI DEPARTMENT OF TRANSPORTATION

DETAIL INDEX

TALLAHATCHIE COUNTY

PROJECT NO.: EXB-0051-02(021)

WORKING NUMBER DI-1

SHEET NUMBER 2

FILENAME: DETINDEX.DGN

DESIGN TEAM ROBERTS CHECKED DATE

REVISION BY DATE

PLAN
ROADWAY DESIGN DIVISION
MISSISSIPPI DEPARTMENT OF TRANSPORTATION

1/12/2016 09:28:39 DETINDEX.DGN

ADDENDUM

STATE	PROJECT NO.
MISS.	EXB-0051-02(021)

SUMMARY OF QUANTITIES (SHEET 1)

PAY ITEM NO.	PAY ITEM	UNIT	PRELIMINARY	FINAL	
201-A001	CLEARING AND GRUBBING	LS	100%		
201-B001	CLEARING AND GRUBBING	ACRE	3		
202-A001	REMOVAL OF OBSTRUCTIONS	LS	100%		1
202-B064	REMOVAL OF PIPE, 8" AND ABOVE	LF	193		
202-B070	REMOVAL OF SIGN INCLUDING POST & FOOTING	EA	31		
202-B078	REMOVAL OF PAVEMENT, ALL TYPES AND DEPTHS	SY	22,225		
202-B134	REMOVAL OF GUARD RAIL, INCLUDING RAILS & POSTS	LF	2,870		
202-B076	REMOVAL OF TRAFFIC STRIPE	LF	8,106		
203-A003	UNCLASSIFIED EXCAVATION, FM, AH	CY	47,719		
203-EX017	BORROW EXCAVATION, AH, FME, CLASS B9	CY	460,495		
203-G004	EXCESS EXCAVATION, LVM, AH	CY	25,386		
206-A001	STRUCTURE EXCAVATION	CY	630		2
206-B001	SELECT MATERIAL FOR UNDERCUTS, CONTRACTOR FURNISHED, FM	CY	46		
907-207-A001	SETTLEMENT PLATE	EA	16		
209-A004	GEOTEXTILE STABILIZATION, TYPE V, NON-WOVEN	SY	35,939		5 △1
213-C001	SUPERPHOSPHATE	TON	23		
907-216-A001	SOLID SODDING	SY	374		
217-A001	DITCH LINER	SY	2,071		
219-A001	WATERING	KGAL	7		
220-A001	INSECT PEST CONTROL	ACRE	23		
221-A001	PORTLAND CEMENT CONCRETE PAVED DITCH	CY	38		
223-A001	MOWING	ACRE	92		4
224-A001	SOIL REINFORCING MAT	SY	3,935		
907-225-A001	GRASSING	ACRE	46		
907-225-B001	AGRICULTURAL LIMESTONE	TON	23		
907-225-C001	MULCH, VEGETATIVE MULCH	TON	92		
907-226-A001	TEMPORARY GRASSING	ACRE	46		
234-A001	TEMPORARY SILT FENCE	LF	20,000		
236-A004	SILT BASIN, TYPE D	EA	9		
907-237-A003	WATTLES, 20"	LF	1,200		
239-A001	TEMPORARY SLOPE DRAINS	LF	921		
907-245-A001	TRIANGULAR SILT DIKE	LF	724		
907-246-A001	SANDBAGS	LF	1,447		
907-247-A001	TEMPORARY STREAM DIVERSION	EA	1		
907-249-A001	RIPRAP FOR EROSION CONTROL	TON	724		
907-252-A001	VW PIEZOMETER	EA	2		
907-253-A001	COIR FIBER BAFFLE	LF	1,028		
907-304-B009	GRANULAR MATERIAL, CLASS 3, GROUP D	TON	19,800		3

1. BRIDGE NO. 43.1 @ STA. 245+63.21
   TALLAHATCHIE RIVER RELIEF
   9 SPANS @ 24'

   BRIDGE NO. 43.5 @ STA. 267+11.21
   TALLAHATCHIE RIVER RELIEF
   9 SPANS @ 24'

   BRIDGE NO. 43.7 @ STA. 276+69.21
   TALLAHATCHIE RIVER RELIEF
   5 SPANS @ 24'

2. INCLUDES 229 CU. YD. FOR SIDE DRAINS, 294 CU. YD. FOR CROSS DRAINS, & 107 CU. YD. FOR BOX BRIDGES.

3. INCLUDES A 20% INCREASE FROM CALCULATED QUANTITY.

4. QUANTITY ESTIMATED @ 2 MOWINGS

5. INCLUDES 3,760 CU.YD. TO BE PLACED UNDER SURCHARGE EMBANKMENT PER BRIDGE PLANS.

DATE	REVISION	BY
12/17/15	REVISED QUANTITY	BJR

MISSISSIPPI DEPARTMENT OF TRANSPORTATION

SUMMARY OF QUANTITIES

(ROADWAY)

TALLAHATCHIE COUNTY
PROJECT NO.: EXB-0051-02(021)

WORKING NUMBER SQ-1

FILENAME: SQS.DGN
DESIGN TEAM ROBERTS CHECKED _____ DATE _____

SHEET NUMBER 11

PLAN
ROADWAY DESIGN DIVISION
MISSISSIPPI DEPARTMENT OF TRANSPORTATION

12/17/2015 13:54:22 SQS.DGN

ADDENDUM

STATE	PROJECT NO.
MISS.	EXB-0051-02(021)

SUMMARY OF QUANTITIES (SHEET 2)

PAY ITEM NO.	PAY ITEM	UNIT	PRELIMINARY	FINAL	
	CRUSHED STONE ALTERNATES				
907-304-F002	SIZE 610 CRUSHED STONE BASE	TON	13,200		
OR	OR				
907-304-F003	3/4" AND DOWN CRUSHED STONE BASE	TON	13,200		
OR	OR				
907-304-F004	SIZE 825B CRUSHED STONE BASE	TON	13,200		
907-403-A017	9.5-MM, ST, ASPHALT PAVEMENT	TON	3,578		
907-403-A018	12.5-MM, ST, ASPHALT PAVEMENT	TON	4,169		
907-403-A019	19-MM, ST, ASPHALT PAVEMENT	TON	3,881		
907-406-A001	COLD MILLING OF BITUMINOUS PAVEMENT, ALL DEPTHS	SY	800		
907-407-A001	ASPHALT FOR TACK COAT	GAL	3,523		
408-A003	ASPHALT FOR PRIME COAT, CUT-BACK MC-70 OR EMULSIFIED EA-1	GAL	1,647		
907-413-E001	SAWING AND SEALING TRANSVERSE JOINTS IN ASPHALT PAVEMENT	LF	391		
423-A001	RUMBLE STRIPS, GROUND IN	MI	4		
502-A001	REINFORCED CEMENT CONCRETE BRIDGE END PAVEMENT	SY	859		
907-601-B003	CLASS "B" STRUCTURAL CONCRETE, MINOR STRUCTURES	CY	3		
602-A001	REINFORCING STEEL	LBS	42,983		
603-CA003	24" REINFORCED CONCRETE PIPE, CLASS III	LF	272		
603-CA005	36" REINFORCED CONCRETE PIPE, CLASS III	LF	40		
603-CA006	42" REINFORCED CONCRETE PIPE, CLASS III	LF	232		
603-CB002	24" REINFORCED CONCRETE END SECTION	EA	6		
603-CB004	36" REINFORCED CONCRETE END SECTION	EA	2		
603-CB005	42" REINFORCED CONCRETE END SECTION	EA	4		
907-603-ALT01	18" TYPE A ALTERNATE PIPE	LF	848		1 2
907-603-ALT02	24" TYPE A ALTERNATE PIPE	LF	168		1
605-W002	FILTER MATERIAL FOR COMBINATION STORM DRAIN AND/OR UNDERDRAINS, TYPE B, FM	CY	6,800		1
606-B001	GUARD RAIL, CLASS A, TYPE 1	LF	1,700		
606-D012	GUARD RAIL, BRIDGE END SECTION, TYPE I	EA	16		
606-E002	GUARD RAIL, TERMINAL END SECTION, FLARED	EA	16		
609-D002	COMBINATION CONCRETE CURB AND GUTTER TYPE 2	LF	555		
610-A001	DRAINAGE WICKS	LF	79,200		2
615-A018	CONCRETE BRIDGE END BARRIER, 33.5"	LF	160		
907-617-A001	RIGHT-OF-WAY MARKER	EA	24		
907-618-A001	MAINTENANCE OF TRAFFIC	LS	100%		

1. ALTERNATE A
   REINFORCED CONCRETE PIPE, CLASS "III" OR CORRUGATED POLYETHYLENE PIPE OR POLYVINYL CHLORIDE (PVC) PIPE.
2. INCLUDES 360 LIN. FT. OF TEMPORARY PIPE.

DATE	REVISION	BY
01/13/16	REVISED QUANTITY	BJR
12/17/15	ADDED PAY ITEM	BJR

MISSISSIPPI DEPARTMENT OF TRANSPORTATION
SUMMARY OF QUANTITIES
(ROADWAY)

TALLAHATCHIE COUNTY
PROJECT NO.: EXB-0051-02(021)

WORKING NUMBER SQ-2

FILENAME: SQS.DGN
DESIGN TEAM ROBERTS CHECKED DATE

SHEET NUMBER 12

PLAN
ROADWAY DESIGN DIVISION
MISSISSIPPI DEPARTMENT OF TRANSPORTATION
1/12/2016 09:28:57 SQS.DGN

ADDENDUM

STATE	PROJECT NO.
MISS.	EXB-0051-02(021)

DESCRIPTION OF SHEETS SPECIAL DESIGN SHEETS ~ BRIDGE DRAWINGS	WORKING NUMBER	SHEET NUMBER
DETAILED INDEX	DI-BR-1	8001
SUMMARY OF QUANTITIES	SQ-BR-1	8002
ESTIMATED QUANTITIES	EQ-BR-1	8003
BRIDGE A AT STA. 216+86.36		
SR 32 ACROSS ILLINOIS CENTRAL RAILROAD (LAYOUT)	A1 OF 17	8004
SR 32 ACROSS ILLINOIS CENTRAL RAILROAD (FOUNDATION)	A2 OF 17	8005
END BENT NO. 1 & 4 DETAILS	A3 OF 17	8006
END BENT NO. 1 & 4 DETAILS	A4 OF 17	8007
END BENT DETAILS	A5 OF 17	8008
INT. BENT NO. 2 DETAILS	A6 OF 17	8009
INT. BENT NO. 3 DETAILS	A7 OF 17	8010
96 FT. SPAN NO. 1 DETAILS	A8 OF 17	8011
135 FT. SPAN NO. 2 DETAILS	A9 OF 17	8012
101 FT. SPAN NO. 3 DETAILS	A10 OF 17	8013
SPAN DETAILS	A11 OF 17	8014
MISCELLANEOUS SPAN DETAILS	A12 OF 17	8015
96 FT. BEAM DETAILS (END SPAN) - BEAM 96-1 - BT-72	A13 OF 17	8016
135 FT. BEAM DETAILS (INT. SPAN) - BEAM 135-1 - BT-72	A14 OF 17	8017
101 FT. BEAM DETAILS (END SPAN) - BEAM 101-1 - BT-72	A15 OF 17	8018
GENERALIZED SOIL PROFILE	A16 OF 17	8019
SETTLEMENT PLATE DETAILS	A17 OF 17	8020
BRIDGE B AT STA. 245+63.21		
SR 32 OVER WILLIAMS LAKE (LAYOUT)	B1 OF 15	8021
SR 32 OVER WILLIAMS LAKE (FOUNDATION)	B2 OF 15	8022
END BENT NO. 1 & 6 DETAILS	B3 OF 15	8023
END BENT DETAILS	B4 OF 15	8024
INT. BENT 2 & 5	B5 OF 15	8025
INT. BENT 3 & 4	B6 OF 15	8026
40 FT. SPAN NO. 1, 2, 4, & 5 DETAILS	B7 OF 15	8027
40 FT. SPAN DETAILS	B8 OF 15	8028
100 FT. SPAN NO. 3 DETAILS	B9 OF 15	8029
100 FT. SPAN DETAILS	B10 OF 15	8030
MISCELLANEOUS SPAN DETAILS	B11 OF 15	8031
40 FT. BEAM DETAILS. ~ TYPE 1+2	B12 OF 15	8032
100 FT. BEAM DETAILS ~ TYPE IV	B13 OF 15	8033
GENERALIZED SOIL PROFILE	B14 OF 15	8034
SURCHARGE AND INSTRUMENTATION DETAILS	B15 OF 15	8035

DESCRIPTION OF SHEETS SPECIAL DESIGN SHEETS ~ BRIDGE DRAWINGS	WORKING NUMBER	SHEET NUMBER
BRIDGE C AT STA. 267+11.21		
SR 32 OVER BLUE SLOUGH (LAYOUT)	C1 OF 17	8036
SR 32 OVER BLUE SLOUGH (FOUNDATION)	C2 OF 17	8037
END BENT NO. 1 DETAILS	C3 OF 17	8038
END BENT NO. 7 DETAILS	C4 OF 17	8039
END BENT DETAILS	C5 OF 17	8040
INT. BENT NO. 2, 3, 5, & 6 DETAILS	C6 OF 17	8041
INT. BENT 4 DETAILS	C7 OF 17	8042
40 FT. SPANS DETAILS	C8 OF 17	8043
40 FT. SPAN DETAILS	C9 OF 17	8044
MISCELLANEOUS SPAN DETAILS	C10 OF 17	8045
40 FT. BEAM DETIALS (END SPANS) ~ TYPE 1+2	C11 OF 17	8046
40 FT. BEAM DETAILS (INT. SPANS) ~ TYPE 1+2	C12 OF 17	8047
GENERALIZED SOIL PROFILE	C13 OF 17	8048
SURCHARGE AND SETTLEMENT PLATE DETAILS	C14 OF 17	8049
WEST BRIDGE ABUTMENT PVD DETAILS	C15 OF 17	8050
EAST BRIDGE ABUTMENT PVD DETAILS	C16 OF 17	8051
PVD DRAINAGE BLANKET	C17 OF 17	8052
BRIDGE D AT STA. 276+69.21		
SR 32 OVER RELIEF (LAYOUT)	D1 OF 13	8053
SR 32 OVER RELIEF (FOUNDATION)	D2 OF 13	8054
END BENT NO. 1 DETAILS	D3 OF 13	8055
END BENT NO. 4 DETAILS	D4 OF 13	8056
END BENT DETAILS	D5 OF 13	8057
INT. BENT NO. 2 & 3 DETAILS	D6 OF 13	8058
40 FT. SPAN DETIALS	D7 OF 13	8059
40 FT. SPAN DETAILS	D8 OF 13	8060
MISCELLANEOUS SPAN DETAILS	D9 OF 13	8061
40 FT. BEAM DETIALS (END SPANS) ~ TYPE 1+2	D10 OF 13	8062
40 FT. BEAM DETAILS (INT. SPANS) ~ TYPE 1+2	D11 OF 13	8063
GENERALIZED SOIL PROFILE	D12 OF 13	8064
SURCHARGE AND SETTLEMENT PLATE DETAILS	D13 OF 13	8065
EROSION CONTROL PLAN ACROSS ILLINOIS CENTRAL RAILROAD (LAYOUT)	ECP-BR1	8066
EROSION CONTROL PLAN ACROSS ILLINOIS CENTRAL RAILROAD (FOUNDATION)	ECP-BR2	8067
EROSION CONTROL PLAN OVER WILLIAMS LAKE (LAYOUT)	ECP-BR3	8068
EROSION CONTROL PLAN OVER WILLIAMS LAKE (FOUNDATION)	ECP-BR4	8069
EROSION CONTROL PLAN OVER BLUE SLOUGH (LAYOUT)	ECP-BR5	8070
EROSION CONTROL PLAN OVER BLUE SLOUGH (FOUNDATION)	ECP-BR6	8071
EROSION CONTROL PLAN OVER RELIEF (LAYOUT)	ECP-BR7	8072
EROSION CONTROL PLAN OVER RELIEF (FOUNDATION)	ECP-BR8	8073
STANDARDS		
RAILING DETAILS	RD-32	8074
CONCRETE PILES	CP-1	8075
SAFETY FENCE DETAILS	SFD-1	8076

BRIDGE DIVISION		
REVISIONS		
DATE	SHEET NO.	BY
1/7/16	8021	KHB
1/12/16	8049, 8050, & 8052	CMC
1/15/16	8004, 8009, 8010	JCF
	& 8019	

MISSISSIPPI DEPARTMENT OF TRANSPORTATION

DETAILED INDEX
(BRIDGE)

PROJECT 102383/301000
EXB-0051-02(021)

TALLAHATCHIE COUNTY

WORKING NUMBER DI-BR-1

SHEET NUMBER 8001

DESIGNER Adam Jackson CHECKER Matt Kirkland
DETAILER Adam Jackson ISSUE DATE 11/18/2015

DIRECTOR OF STRUCTURES, STATE BRIDGE ENGINEER - JUSTIN WALKER, P.E.
DEP. DIR. OF STRUCTURES, ASST. STATE BRIDGE ENGINEER - SCOTT WESTERFIELD, P.E.

REVISIONS DATE BY

ADDENDUM

STATE	PROJECT NO.
MISS.	EXB-0051-02(021)

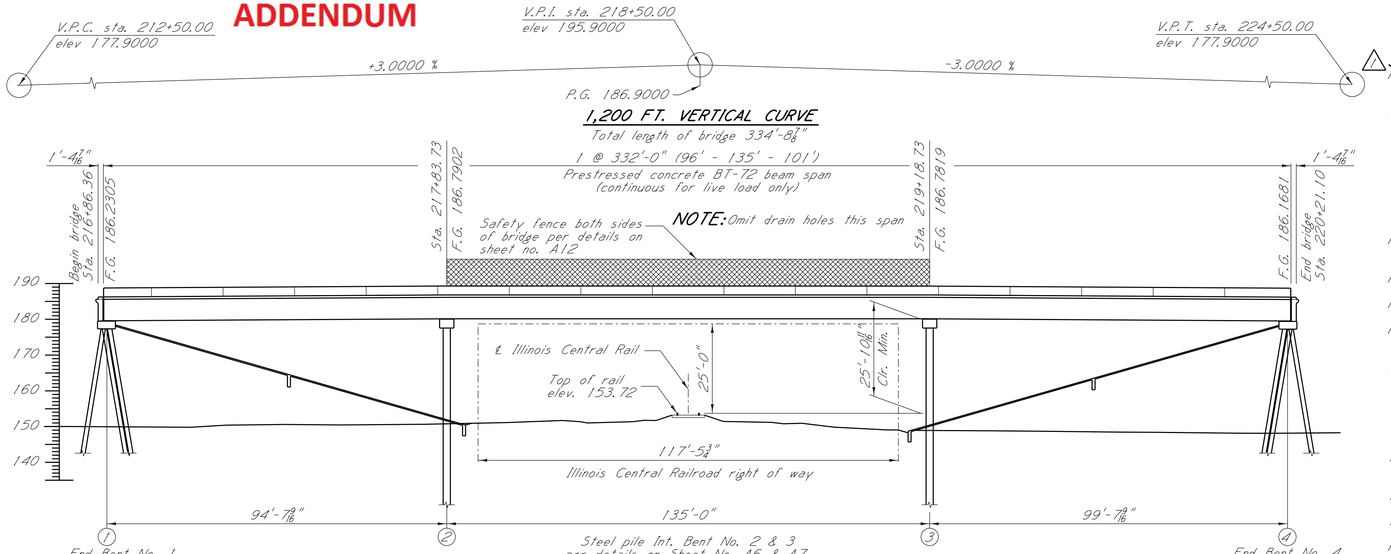

ELEVATION WITH PROFILE ALONG ℄ APPROACH ROADWAY

NOTE:

The girder deflection diagrams shown in these plans were prepared and intended for design and estimation purposes only. Actual bridge girder deflections may differ from the deflection diagrams shown in these plans.

It is the Contractor's responsibility to construct the bridge to meet the requirements of the plans and specifications including, but not limited to, the requirements for bridge deck smoothness.

Prior to formwork construction, the Contractor shall submit three (3) copies of a proposed BRIDGE SUPERSTRUCTURE CONSTRUCTION PLAN to the Director of Structures, State Bridge Engineer for review, through the Project Engineer. This submittal shall include all calculations, assumptions and parameters used by the Contractor to determine bridge girder deflections and form grade elevations. This submittal shall also include an erection and construction procedure that addresses the construction means and methodologies used by the Contractor and shall consider effects including, but not limited to, construction phasing, pouring schedules, applied permanent and construction loading, and shall include calculations and details of temporary girder bracing systems used to ensure girder stability and to counter the effects of girder tilt.

After girder erection and prior to deck construction, the Contractor shall submit deck thickness verification calculations for each girder. These calculations shall include a comparison of the erected girder top flange profiles versus the plan deck grade elevations over each girder plus the anticipated girder deflection due to applied permanent dead load and creep.

Three (3) copies of the deck thickness verification calculations and any proposed remediation measures to correct for thin deck areas shall be submitted to the Director of Structures, State Bridge Engineer for review, through the Project Engineer.

The BRIDGE SUPERSTRUCTURE CONSTRUCTION PLAN and the deck thickness verification calculations shall be prepared and stamped by a Mississippi Registered Professional Engineer.

CONSTRUCTION NOTE:

The contractor shall verify the station along SR 32 at the intersection of baseline SR 32 and ℄ Illinois Central Railroad prior to beginning work to ensure that all minimum clearance requirements will be provided.

NOTE:

See end bent details on sheets no. A3-A5 for bars extending from cap into slope paving. Bend in field to fit slope

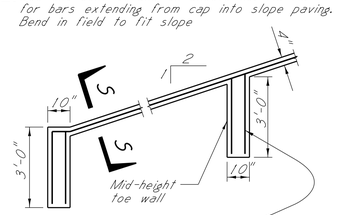

TYPICAL MID-HEIGHT TOE WALL

Typical section where shown

BAR BENDING DETAIL

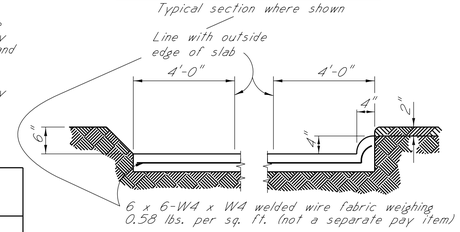

SECTION S-5

SLOPE PAVING DETAILS

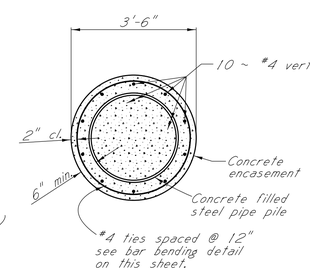

SECTION C-C

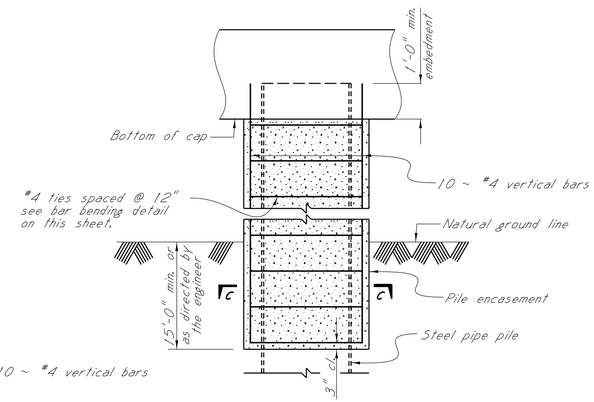

PILE ENCASEMENT DETAIL

30" ϕ steel pipe piles

NOTE: Concrete for pile fill & encasement shall be class "AA" and will be paid for as bridge concrete. Class "AA" concrete with #67 aggregate may be used for pile fill & encasement.

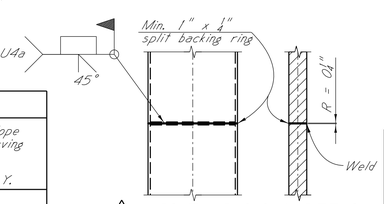

PILE SPLICING DETAIL

30" ϕ steel pipe piles

STEEL PIPE PILE NOTES:

PDA test piles shall be driven with an approved impact hammer as an indicator test pile or production pile at the location shown in the PDA TEST PILE SCHEDULE and will be paid for as test piles only.

The first PDA test pile driven shall be an indicator PDA test pile as shown on the Foundation Plan. The indicator PDA test pile shall be driven continuously using an approved impact hammer. The full length of the indicator PDA test pile shall be monitored using PDA.

The PDA monitored Indicator Test Piles will be out-of-position piles driven with mandatory restrikes and PDA results analyzed prior to driving any PDA Test Piles. Based on the results of the PDA Indicator Test Piles, the plan lengths of the PDA Test Piles may change. Therefore, recommend ordering PDA Test Piles after analysis of the PDA Indicator Test Pile is complete.

Remaining test piles all be driven as a continuos operation, to the tip elevation shown in the PDA TEST PILE SCHEDULE, unless otherwise directed by the Director of Structures, State Bridge Engineer.

PDA test piles shall require a 1 day and 7 day restrike unless otherwise directed by the Engineer.

Pile lengths and driving criteria shall be provided based on the results of the PDA test piles.

Permanent piles shall be driven to an elevation no higher than the elevation shown in the REQUIRED ULTIMATE PILE BEARING CAPACITY AND TIP ELEVATION SCHEDULE.

The required ultimate pile bearing shown in the REQUIRED ULTIMATE PILE BEARING CAPACITY AND TIP ELEVATION SCHEDULE includes the LRFD resistance factor for PDA of 0.65.

The Director of Structures, State Bridge Engineer may authorize test piles driven outside the structural limits.

The tip elevation of piling, for hydraulic structures, may be determined by the scour line.

When feasible, bearing piles shall be driven full length and be spliced, only, as approved by the Director of Structures, State Bridge Engineer.

When loading tests are required, the maximum test load shall be one and one half (1½) times the minimum pile bearing capacity.

Welding shall be done by the ELECTRIC ARC process. Welders shall be certified and electrodes shall be approved.

Pile hammer leads used for all PDA test piles and PDA restrikes shall be large enough to provide a minimum of 3" clearance on each side of the pile in order to properly place and protect PDA gages.

All Steel Pipe Piles shall be ASTM A252, Grade 3 (Fy = 45,000 psi.).

Steel Pipe Piles are intended to be opend ended.

Welding shall comply with ANSI/AWS D1.5 Bridge Welding Code and be performed by a certified welder.

GENERAL NOTES:

Specifications: Mississippi Standard Specifications for Road and Bridge Construction, 2004.

No change of plans will be permitted except by written approval of the Director of Structures, State Bridge Engineer. Minor changes in detail of design or construction procedure may be authorized by the Director of Structures, State Bridge Engineer provided such changes will not be cause for contract price adjustment.

The final surface texture of the bridge deck shall be mechanically transverse grooved in accordance with Sections 501 and 907-804 of the specifications. See Misc. Span Details for limits of transyerse grooving on bridge deck.

Bridge concrete shall be class "AA".

Railing expansion joint material shall be bituminous fiber type unless otherwise noted.

No payment will be allowed for excavation incidental to the construction of end bents.

Bar bending details shall be in accordance with "Manual of Standard Practice for Detailing Reinforced Concrete Structures" (ACI 315R-94).

Reinforcement order lists and required placing plans shall be furnished in accordance with Section 805 of the Mississippi Standard Specifications. Partial submittals are not acceptable.

Shop drawings of prestressed beams, including an erection plan, shall be submitted in duplicate to the Director of Structures, State Bridge Engineer for approval prior to the manufacture of beams.

The Fabricator shall provide camber data at release and immediately prior to shipping.

The Contractor shall provide camber data after erection. The Contractor should be aware that the deflection diagram may be modified based on the provided camber data. Therefore, deck grades should be set only after notification from the Director of Structures, State Bridge Engineer.

Concrete surfaces shall receive a Class 2 rubbed or spray finish in accordance with the specifications.

Reinforcing steel shall be ASTM A615, Grade 60, unless otherwise noted.

Work for which no pay item is provided in the proposal will not be paid for directly and compensation therefor will be included in the prices and payments for bid items.

CONCRETE PILE NOTES:

Test piles shall be driven as permanent piles at the location shown in the PDA TEST PILE SCHEDULE and will be paid for as test piles only.

The Director of Structures, State Bridge Engineer may authorize test piles driven outside the structural limits.

Test piles shall be driven as a continuous operation, to the tip elevation shown in the PDA TEST PILE SCHEDULE, unless otherwise directed by the Director of Structures, State Bridge Engineer.

Permanent piles shall be driven to an elevation no higher than the elevation shown in the REQUIRED ULTIMATE PILE BEARING CAPACITY AND TIP ELEVATION SCHEDULE.

The tip elevation of piling, for hydraulic structures, may be determined by the scour line.

When feasible, bearing piles shall be driven full length and be spliced, only, as approved by the Director of Structures, State Bridge Engineer.

When loading tests are required, the maximum test load shall be one and one half (1 1/2) times the minimum pile bearing capacity.

All piles shall be prestressed type per details on sheet no. CP-1.

Prestressed concrete piling shall not be driven until the concrete has reached a minimum compressive strength of 5,000 psi and is at least 7 days old.

PDA test piles shall require a 1 day and 7 day restrike unless otherwise directed by the Engineer.

Pile lengths and driving criteria shall be provided based on the results of the PDA test piles.

The required ultimate pile bearing shown in the REQUIRED ULTIMATE PILE BEARING AND TIP ELEVATION SCHEDULE includes the LRFD resistance factor for PDA of 0.65.

Pile hammer leads used for all PDA test piles and PDA restrikes shall be large enough to provide a minimum of 3" of clearance on each side of the pile in order to properly place and protect PDA gages.

SPECIAL PROVISIONS REQUIRED:

Concrete Bridges And Structures . . . . . No. 907-804

DESIGN DATA:

Specifications. . . . . A.A.S.H.T.O., LRFD 2014
Loading. HL-93
Roadway width. . . . . 36'-0" Gutter to gutter
Concrete. . . . . Class "AA" (4,000 p.s.i.)

SEISMIC DESIGN DATA:

Seismic Performance Zone. 2
Seismic Soil Site Class. . . . . D
Seismic Operational Class. . . . . Other

PDA TEST PILE SCHEDULE

Bent No.	Min. Length (ft.)	Tip Elev.
1	53'-0"	127.66
2	115'-0"	63.06
4	53'-0"	127.60
Sta. 217+83.73*	115'-0"	63.06

PILE HAMMER NOTE:

Prest. Con. piles shall be driven with a pile hammer capable of generating a rated energy of no less than 62,000 ft.-lb. of energy and no more than 76,000 ft.-lb of energy.

Steel Pipe Piles shall be driven with a pile hammer capable of generating a rated energy of no less than 107,000 ft.-lb of energy.

NOTE: *Indicator steel pipe pile is to be driven 3 to 5 pile diameters from location of PDA Test Pile

REQUIRED ULTIMATE PILE BEARING CAPACITY AND TIP ELEVATION SCHEDULE

Bent No.	Pile Type & Size	Required Ultimate Bearing (Tons)	Est. Length (ft.)	Controlling Limit State	LRFD Resistance Factor	Tip Elevation
1	Prest. con. 18"x18"	214.5	43'-0"	Strength 1	0.65	
2	30" ϕ pipe pile	463.0	95'-0"	Strength 1	0.65	
3	30" ϕ pipe pile	463.0	95'-0"	Strength 1	0.65	
4	Prest. con. 18"x18"	214.5	43'-0"	Strength 1	0.65	

NOTE: The LRFD Load Resistance Factor of 0.65 has been applied to the Required Ult. Bearing

ESTIMATED QUANTITIES

Location \ Item	Trans. Grooving S.Y.	Safety Fence, Per Plans L.F.	Conventional Static Pile Load Test Each	18"x18" Prest. Conc. Piling L.F.	PDA Test Pile Each	Pile Restrike Each	30" ϕ Pipe Piling, Wall Thickness 0.500" L.F.	Class "AA" Bridge Concrete C.Y.	96 Ft. Prestressed Conc. Beams BT-72 L.F.	101 Ft. Prestressed Conc. Beams BT-72 L.F.	135 Ft. Prestressed Conc. Beams BT-72 L.F.	Reinforcement Lb.	Concrete Railing L.F.	Slope Paving C.Y.
Spans	1180.44	270.0						370.73	477.29	502.29	670.83	99937	664.00	
End bents				1280.0	2	1		103.29				16524	5.09	131.0
Int. bents			1		2	1	855.0	148.59				12124		
Totals	1180.44	270.0	1	1280.0	4	2	855.0	622.61	477.29	502.29	670.83	128585	669.09	131.0

DEPARTMENT OF TRANSPORTATION MDOT MISSISSIPPI

DATE: 11/18/2015

DATE	REVISIONS	BY
1/15/2016	Revised Notes & Details	JCF

MISSISSIPPI DEPARTMENT OF TRANSPORTATION
OVERPASS AT STA. 216+86.36
SR 32 OVER ICRR
LAYOUT

PROJECT 102383/301000
EXB-0051-02(021)

TALLAHATCHIE COUNTY

WORKING NUMBER A1 OF 16

DESIGNER Adam Jackson CHECKER Matt Kirkland
DETAILER Adam Jackson ISSUE DATE 11/18/2015
DIRECTOR OF STRUCTURES, STATE BRIDGE ENGINEER - JUSTIN WALKER, P.E.
DEP. DIR. OF STRUCTURES, ASST. STATE BRIDGE ENGINEER - SCOTT WESTERFIELD, P.E.

SHEET NUMBER 8004

ADDENDUM

STATE	PROJECT NO.
MISS.	EXB-0051-02(021)

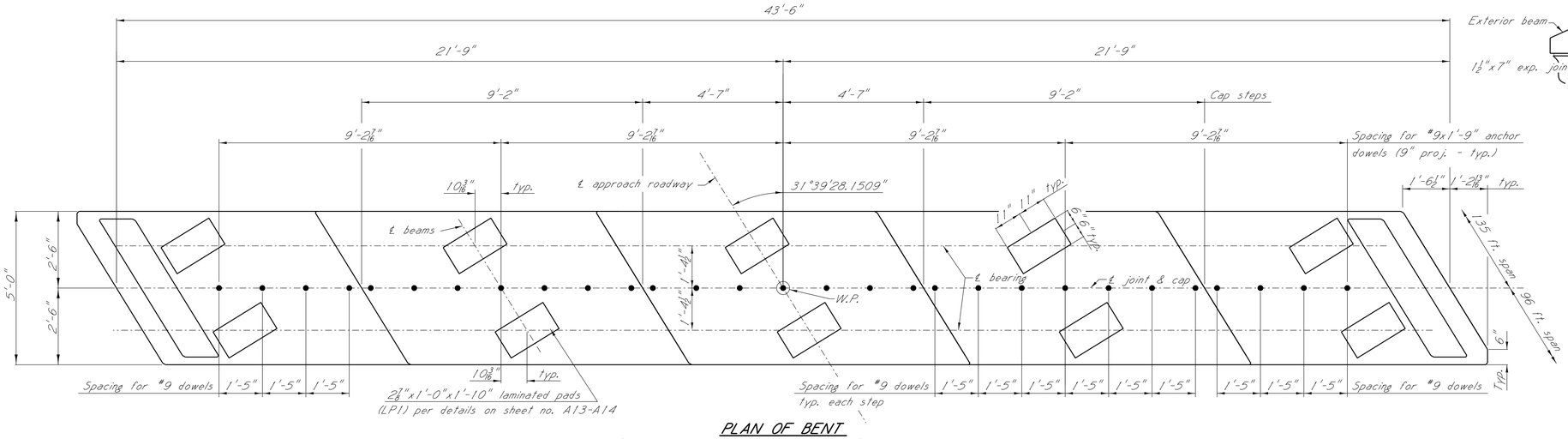

PLAN OF BENT

Showing concrete dimensions, cap steps, & laminated pads

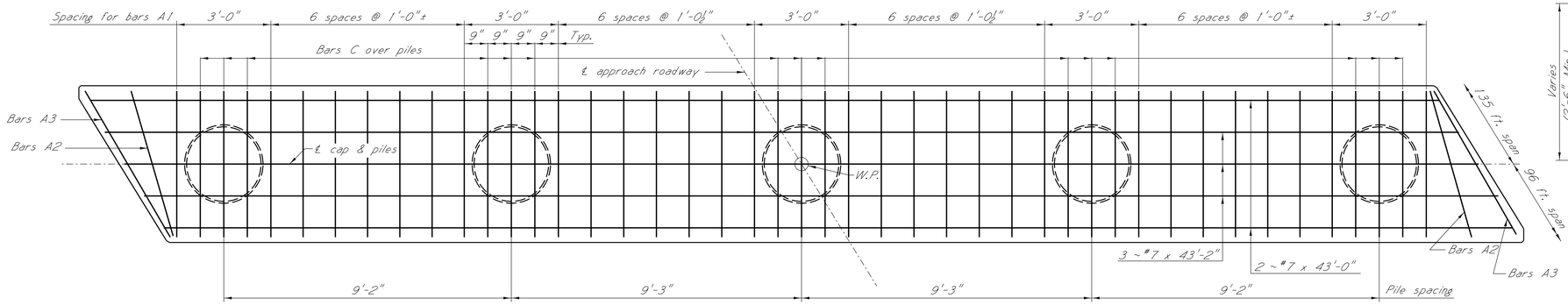

PLAN OF CAP

Showing reinforcing in top of cap & pile spacing

NOTE:
Piles shall be of the size, type, and driven to the minimum bearing capacity as shown on the layout sheet.

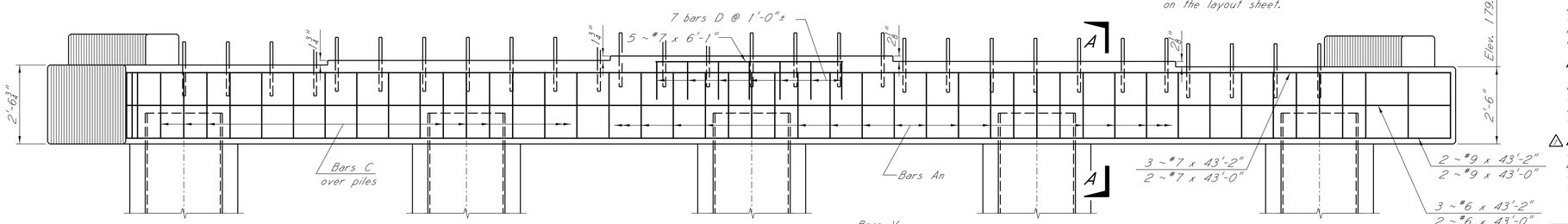

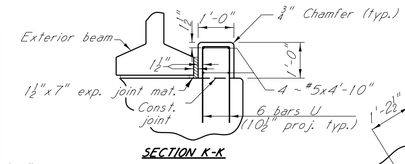

SECTION K-K

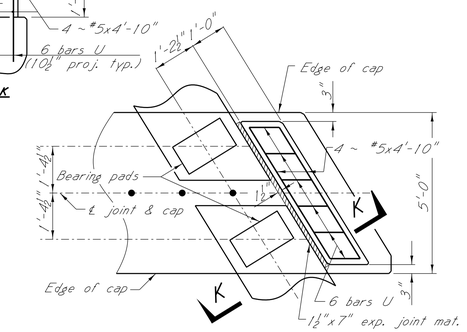

SHEAR KEY REINFORCEMENT

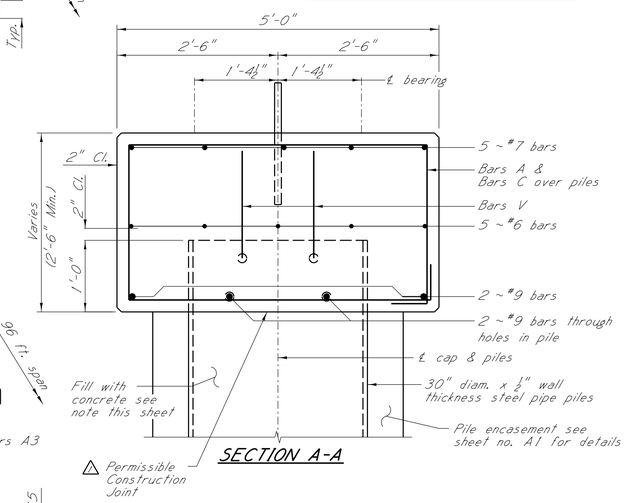

SECTION A-A

GENERAL NOTES:
All concrete in cap shall be Class "AA".
Chamfer all edges 3/4" unless otherwise noted.
Placing dimensions from reinforcing steel to concrete surfaces are clear distances.

PIPE PILE FILL NOTE:
The pipe pile shall be plugged 15' below the natural ground and filled with concrete. Any work and materials associated with the installation of the pipe pile pluges will not be paid for seperately but will be absorbed in the pay item Class "AA" Concrete for interior bents.

△ NOTES:
Concrete in the pipe pile may be poured monolithic with bent cap concrete.
Concrete within the pipe pile from the bottom of the cap to the top of the pile shall be poured monolithic with the bent cap.

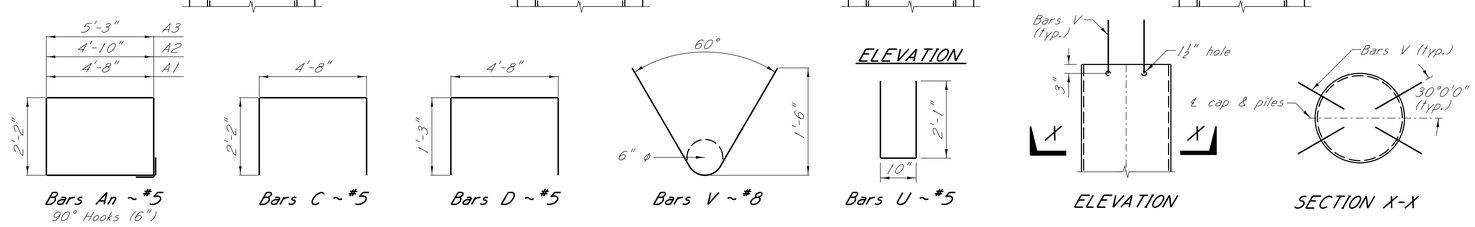

BAR BENDING DETAILS

PILE ANCHORAGE DETAIL

DEPARTMENT OF TRANSPORTATION MDOT MISSISSIPPI

DATE: 11/18/2015

DATE	REVISIONS	BY
1/15/2016	Added Note & Detail	JCF

MISSISSIPPI DEPARTMENT OF TRANSPORTATION
OVERPASS AT STA. 216+86.36

INT. BENT NO. 2 DETAILS

PROJECT 102383/301000
EXB-0051-02(021)

TALLAHATCHIE COUNTY

DESIGNER Adam Jackson CHECKER Matt Kirkland
DETAILER Adam Jackson ISSUE DATE 11/15/2015
DIRECTOR OF STRUCTURES, STATE BRIDGE ENGINEER - JUSTIN WALKER, P.E.
DEP. DIR. OF STRUCTURES, ASSIST. STATE BRIDGE ENGINEER - SCOTT WESTERFIELD, P.E.

WORKING NUMBER A6 OF 16

SHEET NUMBER 8009

ADDENDUM

STATE	PROJECT NO.
MISS.	EXB-0051-02(021)

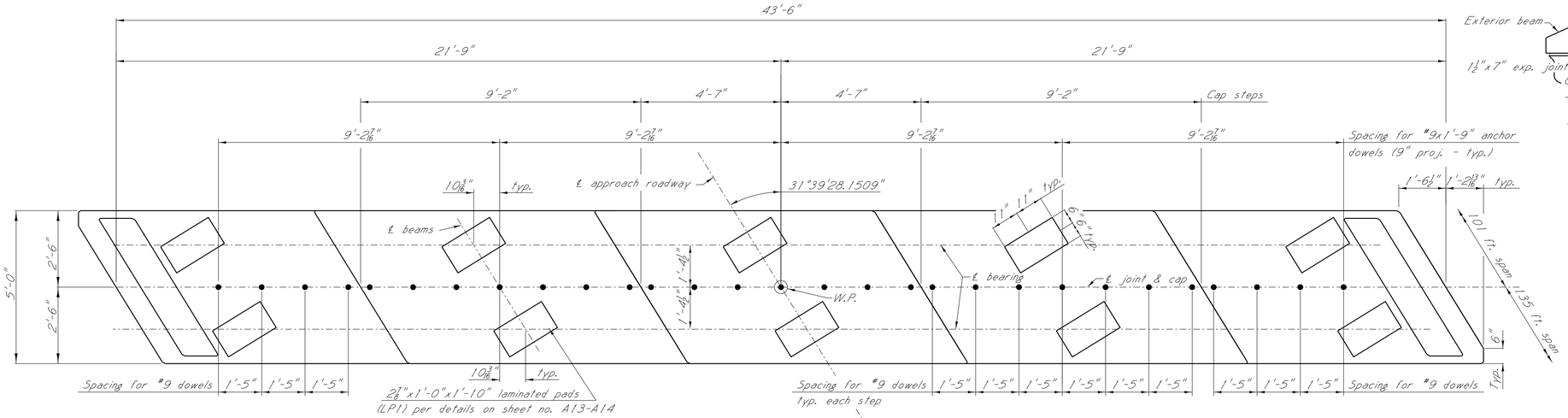

PLAN OF BENT

Showing concrete dimensions, cap steps, & laminated pads

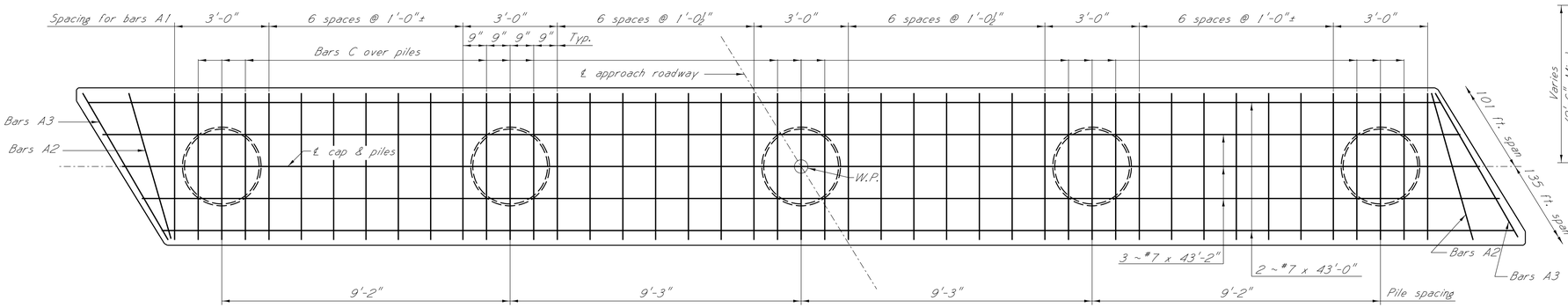

PLAN OF CAP

Showing reinforcing in top of cap & pile spacing

NOTE:
Piles shall be of the size, type, and driven to the minimum bearing capacity as shown on the layout sheet.

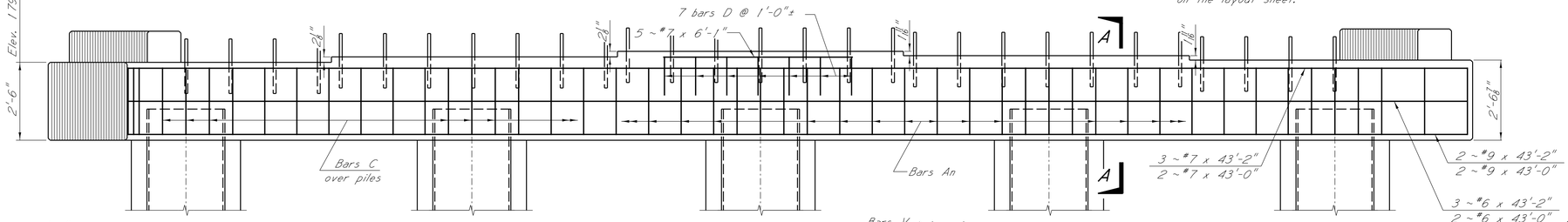

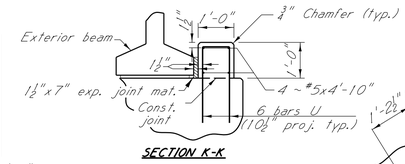

SECTION K-K

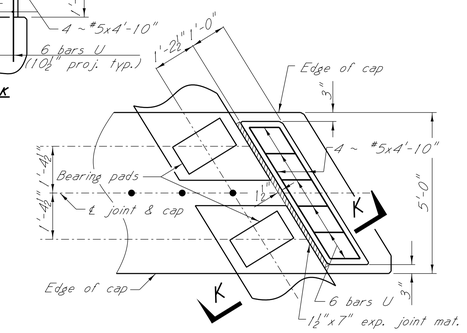

SHEAR KEY REINFORCEMENT

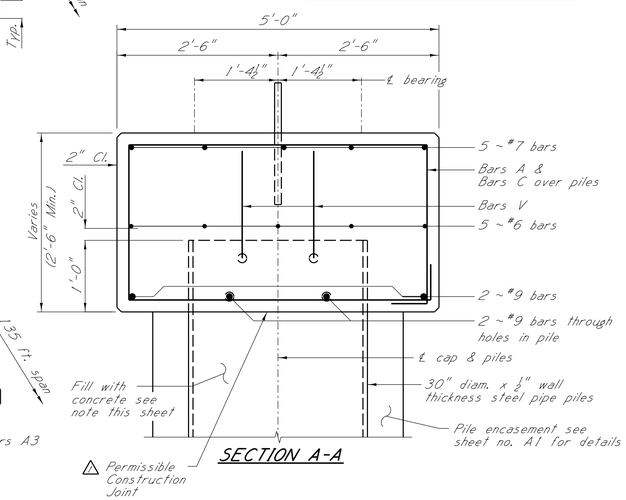

SECTION A-A

GENERAL NOTES:
All concrete in cap shall be Class "AA".
Chamfer all edges ¾" unless otherwise noted.
Placing dimensions from reinforcing steel to concrete surfaces are clear distances.

PIPE PILE FILL NOTE:
The pipe pile shall be plugged 15' below the natural ground and filled with concrete. Any work and materials associated with the installation of the pipe pile pluges will not be paid for seperately but will be absorbed in the pay item Class "AA" Concrete for interior bents.

△ NOTES:
Concrete in the pipe pile may be poured monolithic with bent cap concrete.
Concrete within the pipe pile from the bottom of the cap to the top of the pile shall be poured monolithic with the bent cap.

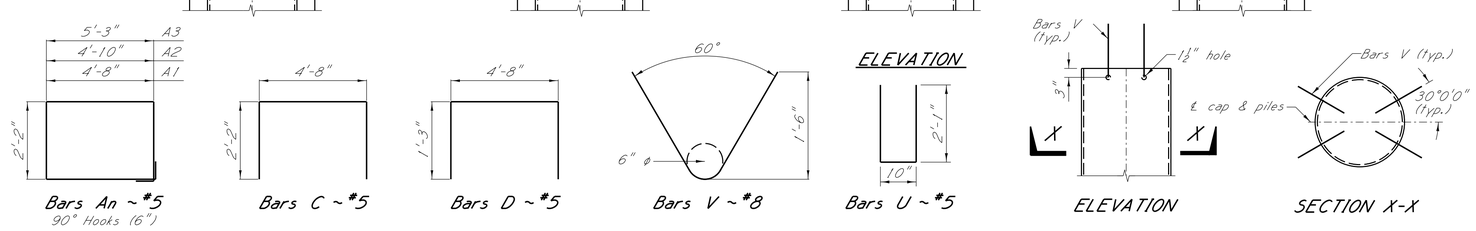

BAR BENDING DETAILS

PILE ANCHORAGE DETAIL

DEPARTMENT OF TRANSPORTATION MDOT MISSISSIPPI
DATE: 11/18/2015

DATE	REVISIONS	BY
1/15/2016	Added Note & Detail	JCF

MISSISSIPPI DEPARTMENT OF TRANSPORTATION
OVERPASS AT STA. 216+86.36

INT. BENT NO. 3 DETAILS

PROJECT 102383/301000
EXB-0051-02(021)

TALLAHATCHIE COUNTY

DESIGNER Adam Jackson CHECKER Matt Kirkland
DETAILER Adam Jackson ISSUE DATE 11/18/2015
DIRECTOR OF STRUCTURES, STATE BRIDGE ENGINEER - JUSTIN WALKER, P.E.
DEP. DIR. OF STRUCTURES, ASSIST. STATE BRIDGE ENGINEER - SCOTT WESTERFIELD, P.E.

WORKING NUMBER A7 OF 16

SHEET NUMBER 8010

ADDENDUM

STATE	PROJECT NO.
MISS.	EXB-0051-02(021)

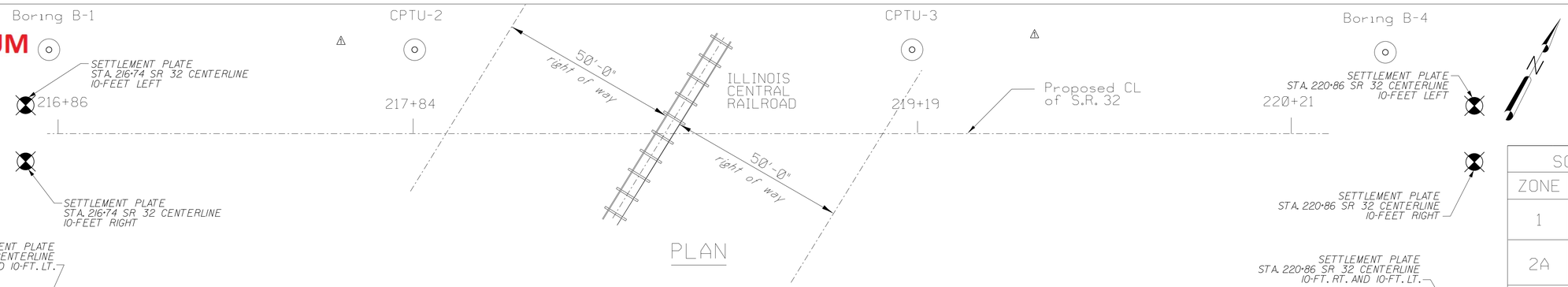

PLAN

SOIL STRENGTHS			
ZONE	C (ksf)	θ'	γ (pcf)
1	1.2	0	120
2A	0	34	120
2B	0	36	125

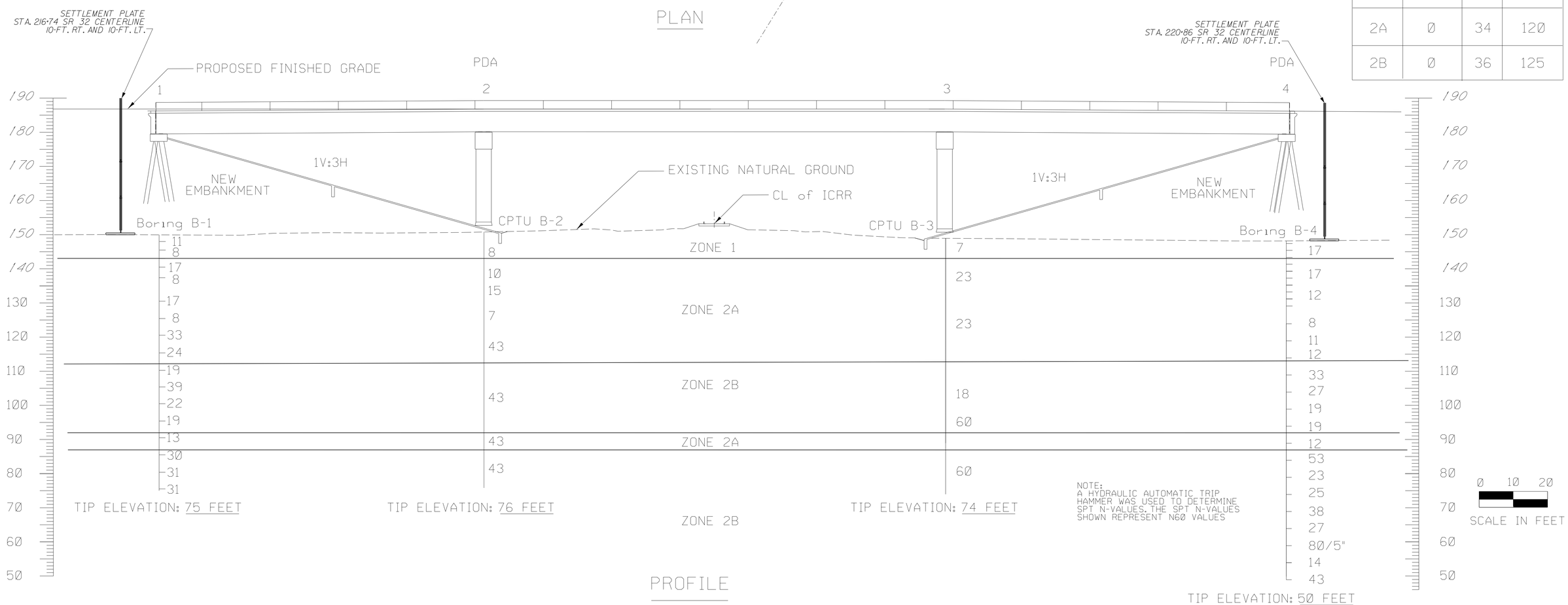

NOTE:
A HYDRAULIC AUTOMATIC TRIP HAMMER WAS USED TO DETERMINE SPT N-VALUES. THE SPT N-VALUES SHOWN REPRESENT N60 VALUES

PROFILE

MDOT REPORT NO. 14-68-07

ZONE 1: MISSISSIPPI RIVER ALLUVIUM (RECENT)

1 - MEDIUM STIFF TO STIFF, BROWN, SANDY CLAY (CL) AND FAT CLAY (CH)

ZONE 2: MISSISSIPPI RIVER ALLUVIUM

2A - LOOSE TO MEDIUM DENSE, GRAY AND BROWN SAND (SP), SILTY SAND (SM) AND SAND WITH SILT (SP-SM)

2B - MEDIUM DENSE TO DENSE, GRAY AND BROWN SAND (SP) AND SAND WITH SILT (SP-SM)

NOTICE TO CONTRACTOR:

1. THE GENERALIZED SOIL PORFILE SHOWN WITH ITS VARIOUS SOIL ZONE DESCRIPTIONS AND INDICATED BOUNDARIES IS BASED UPON AN ENGINEERING AND GEOLOGICAL INTERPRETATION OF ALL AVAILABLE GEOTECHNICAL INFORMATION BY GEOTECHNOLOGY, INC. AND MAY NOT NECESSARILY REFLECT THE ACTUAL VARIATION IN SUBSURFACE CONDITIONS BETWEEEN BORINGS AND SAMPLES. DETAILED DATA AND FIELD INTERPRETATION OF CONDITIONS ENCOUNTERED IN INDIVIDUAL BORINGS ARE SHOWN ON THE BORING LOGS. THE GEOTECHNICAL REPORT IS AVAILABLE FOR INSPECTION THROUGH THE MDOT GEOTECHNICAL BRANCH.
2. SOUND ENGINEERING JUDGEMENT WAS EXERCISED IN PREPARING THE SUBSURACE INFORMATION PRESENTED ON THIS SHEET. THIS INFORMATION WAS PREPARED AND IS INTENDED FOR MDOT DESIGN AND ESTIMATE PUPOSES. ITS PRESENTATION ON THE PLANS OR ELSEWHERE IS FOR THE PURPOSE OF PROVIDING INTENDED USERS WITH ACCESS TO THE SAME INFORMATION AVAILABLE TO THE MDOT. THIS SUBSURFACE INFORMATION INTERPRETATION PRESENTED IS GOOD FAITH AND IS NOT INTENDED AS A SUBSTITUTE FOR PERSONAL INVESTIGATION, INDEPENDENT INTERPRETATIONS OR JUDGEMENT BY OTHERS.
3. ALL STRUCTURAL DETAILS SHOWN ON THIS SHEET ARE FOR ILLUSTRATIVE PURPOSES ONLY AND MAY NOT BE INDICATIVE OF THE FINAL DESIGN CONDITIONS SHOWN ELSEWHERE IN THE CONTRACT PLANS.

DATE	REVISIONS	BY
01/15/16	REMOVE SHAFT NOTES	CMC
09/22/15	SETTLEMENT PLATES	CMC

MISSISSIPPI DEPARTMENT OF TRANSPORTATION
GENERALIZED SOIL PROFILE
S.R. 32 OVER ICRR
OVERPASS AT STA. 216+86.26

PROJECT EXB-0051-02(021)
102383/301000

TALLAHATCHIE COUNTY

WORKING NUMBER A16 OF 17

GEOTECHNOLOGY, INC.

DRAWN BY : DBA
DATE: 7/8/2014
CH'D BY : DBA
DATE: 10/9/2014

SHEET NUMBER 8019

ADDENDUM

STATE	PROJECT NO.
MISS.	EXB-0051-02(021)

Steel HP piles end bent no. 1 & 6 per details on sheets no. B3 & B4. 9 - HP14"x117" piles for each end bent.

Steel HP piles int. bent no. 3 & 4 per details on sheets no. B6. 5 - HP16"x121" piles for each int. bent.

Steel HP piles int. bent no. 2 & 5 per details on sheets no. B5. 5 - HP14"x117" piles for each int. bent.

ELEVATION WITH PROFILE ALONG ℄ APPROACH ROADWAY

Scale: 1" = 10'-0"

GENERAL NOTES:

Specifications: Mississippi Standard Specifications for Road and Bridge Construction, 2004.
No change of plans will be permitted except by written approval of the Director of Structures, State Bridge Engineer. Minor changes in detail of design or construction procedure may be authorized by the Director of Structures, State Bridge Engineer provided such changes will not be cause for contract price adjustment.
The final surface texture of the bridge deck shall be mechanically transverse grooved in accordance with Sections 501 and 804 of the specifications. See Misc. Span Details for limits of transverse grooving on bridge deck.
Bridge concrete shall be class "AA".
The bridge deck concrete will require a waterproofing admixture in accordance with Special Provision 907-713, Admixtures for Concrete.
Railing expansion joint material shall be bituminous fiber type unless otherwise noted.
No payment will be allowed for excavation incidental to the construction of end bents.
Bar bending details shall be in accordance with "Manual of Standard Practice for Detailing Reinforced Concrete Structures" (ACI 315R-94).
Reinforcement order lists and required placing plans shall be furnished in accordance with Section 805 of the Mississippi Standard Specifications. Partial submittals are not acceptable.
Shop drawings of prestressed beams, including an erection plan, shall be submitted in duplicate to the Director of Structures, State Bridge Engineer for approval prior to the manufacture of beams.
Concrete surfaces shall receive a Class 2 rubbed or spray finish in accordance with the specifications.
Reinforcing steel shall be ASTM A615, Grade 60, unless otherwise noted.
Work for which no pay item is provided in the proposal will not be paid for directly and compensation therefor will be included in the prices and payments for bid items.
All riprap and geotextile fabric shown on the bridge palns are included in the bridge quantities.

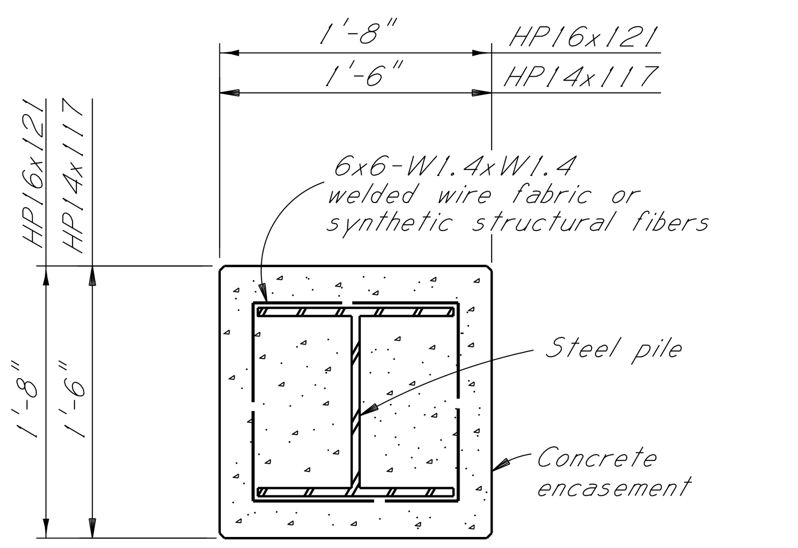

NOTE: Concrete for pile encasement shall be class "AA" and will be paid for as bridge concrete.
Class "AA" concrete with #67 aggregate may be used for pile encasement.
Pile encasement shall be reinforced with 6x6-W1.4xW1.4 welded wire fabric weighing 0.21 lbs. per sq. ft. (not a separate pay item) or synthetic structural fiber applied at a dosage rate of 4 lbs. per cubic yd. Synthetic structural fiber shall meet requirements of Special Provision no. 907-711 (not a separate pay item).
Chamfer corners of encasement ¾".

PILE ENCASEMENT DETAIL

HP14x117 steel piles
HP16x121 steel piles

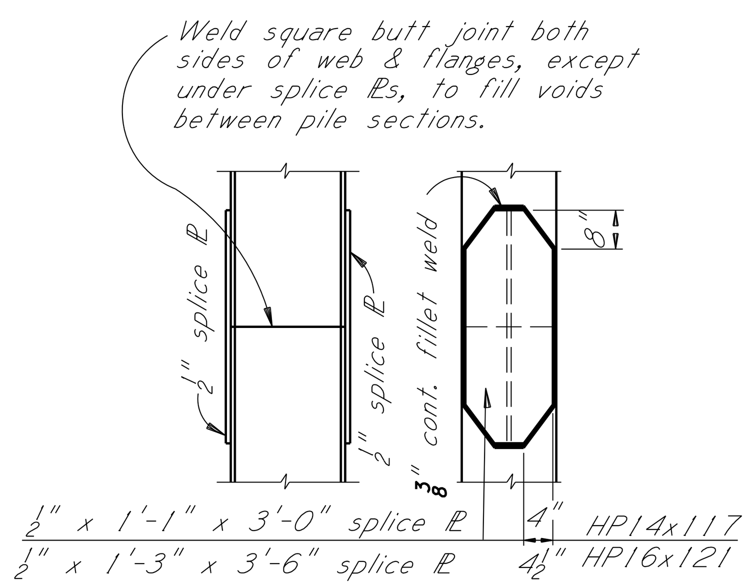

PILE SPLICE DETAIL

HP14x117 steel piles
HP16x121 steel piles

NOTE: In lieu of splice plates, prefabricated splicers may be used. Prefabricated splicers shall be submitted for approval by the Director of Structures, State Bridge Engineer.

SPECIAL PROVISIONS REQUIRED:

Concrete Bridges And Structures . . . . . No. 907-804

PILE NOTES:

Test piles shall be driven as permanent piles at the location shown in the PDA TEST PILE SCHEDULE and will be paid for as test piles only.
The Director of Structures, State Bridge Engineer may authorize test piles driven outside the structural limits.
Test piles shall be driven as a continuous operation, to the bearing capacity and the minimum ground penetration shown in the PDA TEST PILE SCHEDULE, unless otherwise directed by the Director of Structures, State Bridge Engineer.
Permanent piles shall be driven to an elevation no higher than the elevation shown in the REQUIRED ULTIMATE PILE BEARING CAPACITY AND TIP ELEVATION SCHEDULE.
The tip elevation of piling, for hydraulic structures, may be determined by the scour line.
When feasible, bearing piles shall be driven full length and be spliced, only, as approved by the Director of Structures, State Bridge Engineer.
Welding shall be done by the ELECTRIC ARC process. Welders shall be certified and electrodes shall be approved.
When loading tests are required, the maximum test load shall be one and one half (1 1/2) times the minimum pile bearing capacity.
PDA test piles shall require a 1 day and 7 day restrike unless otherwise directed by the Engineer.
Pile lengths and driving criteria shall be provided based on the results of the PDA test piles.
The required ultimate pile bearing shown in the REQUIRED ULTIMATE PILE BEARING AND TIP ELEVATION SCHEDULE includes the LRFD resistance factor for PDA of 0.65.
Pile hammer leads used for all PDA test piles and PDA restrikes shall be large enough to provide a minimum of 3" of clearance on each side of the pile in order to properly place and protect PDA gages.
Steel HP section piles shall be drive with a maximum rated energy no less than 62,000 ft-lbs, to the tip elevations specified unless the Contractor's Drivability Analysis utilizing the Contractor's selected alternative hammer is approved by the Director of Structures, State Bridge Engineer.
Bridge end abutment piles are not to be driven until the embankment surcharge is removed.

NOTE:

The girder deflection diagrams shown in these plans were prepared and intended for design and estimation purposes only. Actual bridge girder deflections may differ from the deflection diagrams shown in these plans.
It is the Contractor's responsibility to construct the bridge to meet the requirements of the plans and specifications including, but not limited to, the requirements for bridge deck smoothness.
Prior to formwork construction, the Contractor shall submit three (3) copies of a proposed bridge superstructure construction plan to the Director of Structures, State Bridge Engineer for review, through the Project Engineer. This submittal shall include all calculations, assumptions and parameters used by the Contractor to determine bridge girder deflections and form grade elevations. This submittal shall also include an erection and construction procedure that addresses the construction means and methodologies used by the Contractor and shall consider effects including, but not limited to, construction phasing, pouring schedules, applied permanent and construction loading, and shall include calculations and details of temporary girder bracing systems used to ensure girder stability and to counter the effects of girder tilt.
After girder erection and prior to deck construction, the Contractor shall submit deck thickness verification calculations for each girder. These calculations shall include a comparison of the erected girder top flange profiles versus the plan deck grade elevations over each girder plus the anticipated girder deflection due to applied permanent dead load and creep.
Three (3) copies of the deck thickness verification calculations and any proposed remediation measures to correct for thin deck areas shall be submitted to the Director of Structures, State Bridge Engineer for review, through the Project Engineer.
The bridge superstructure construction plan and the deck thickness verification calculations shall be prepared and stamped by a Mississippi Registered Professional Engineer.

NOTE: For geotechnical notes and additional pile encasement details see sheet No. B2.

DRAINAGE DATA:

Drainage Area . . . . 4,290 sq. mi.
Total Q50 (USGS) . . . . 34,400 c.f.s.

THIS BRIDGE PROVIDES:

Q50 (USGS) . . . . 2974 C.F.S.
Effective Area . . . . 2439 sq. ft.

DESIGN DATA:

Specifications. . . . . A.A.S.H.T.O. LRFD, 2014
Loading. HL-93
Roadway Width. . . . . 36'-0" Gutter To Gutter
Concrete. . . . . .Class "AA" (4,000 p.s.i.)
Seismic Performance Zone. 2
Seismic Soil Site Class. . . . . D
Seismic Operational Class. . . . . . . Other

REQUIRED ULTIMATE PILE BEARING CAPACITY AND TIP ELEVATION SCHEDULE

Bent No.	Pile type	Req'd Bearing (Tons)	Pile Size	Estimated Length	Tip Elevation
1	Steel	115.0	HP14"x117"	60	114.3
2	Steel	153.0	HP14"x117"	75	114.1
3	Steel	222.0	HP16"x121"	85	113.0
4	Steel	222.0	HP16"x121"	85	113.3
5	Steel	153.0	HP14"x117"	65	114.7
6	Steel	115.0 △1	HP14"x117"	60	123.9

500 Yr. Scour Evaluations	
Bent	Elevation
1	139.3
2	134.1
3	133.0
4	133.3
5	134.7
6	143.9

TEST PILE SCHEDULE

Bent No.	Min. Lgth.~Ft.	Tip Elevation
1	70	84.0
3	95	56.6
5	75	78.8

ESTIMATED QUANTITIES BRIDGE 'B'

Item / Location	Transverse Grooving (S.Y.)	Loading Test (Each)	HP14X117 Steel Piling (L.F.)	HP16X121 Steel Piling (L.F.)	PDA Test Piles (Each)	Pile Restrike (Each)	Class AA Bridge Concrete Substructure (C.Y.)	Class AA Bridge Concrete Superstructure (C.Y.)	40 Ft. Prest. Conc. Beam Type I+2 (L.F.)	100 Ft. Prest. Conc. Beam Type IV (L.F.)	Reinforce-ment (Lb.)	Concrete Railing (L.F.)	Loose Riprap (300#) (Ton)	Geotextile Under Riprap (S.Y.)
Spans	924.44							279.73	789.17	498.75	57014	520.00		
End Bents			1020.0		1	1	42.48				7008	3.00	1968.0	788.0
Int. Bents		1	635.0	1400.0	2	1	87.59				7640			
Total	924.44	1	1655.0	1400.0	3	2	130.07	279.73	789.17	498.75	71662	523.00	1968.0	788.0

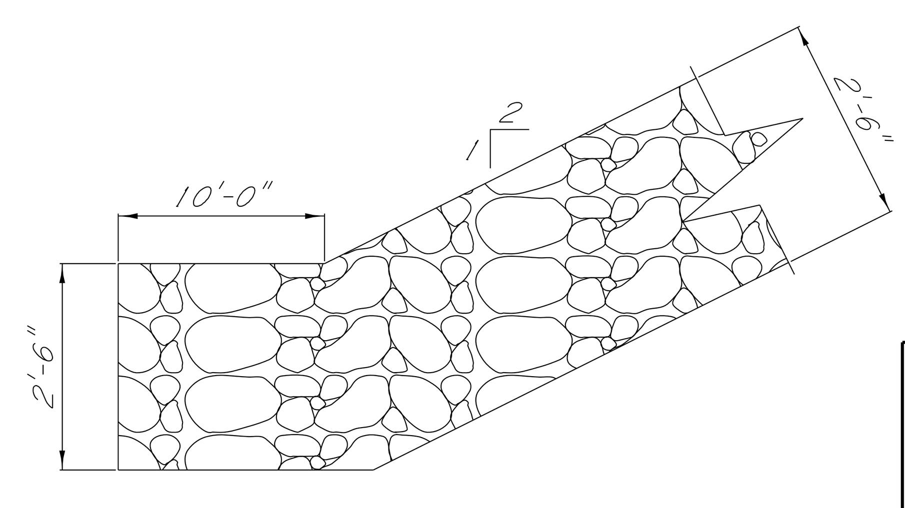

RIPRAP TOE DETAILS

Not to scale

NOTE:
Geotextile fabric is required under all riprap.

MISSISSIPPI DEPARTMENT OF TRANSPORTATION
BRIDGE "B" AT STA. 245+63.21
SR 32 OVER WILLIAMS LAKE
BRIDGE NO. 43.1
LAYOUT DETAILS

PROJECT 102383/301000 EXB-0051-02(021)

TALLAHATCHIE COUNTY

WORKING NUMBER B1 OF 15

SHEET NUMBER 8021

Revision	By	Date
REQUIRED BEARING CAPACITY	KHB	1/7/16

DESIGNER Korey Beckman — CHECKER Spencer Yates
DETAILER Korey Beckman — ISSUE DATE 11/18/2015
DIRECTOR OF STRUCTURES, STATE BRIDGE ENGINEER - JUSTIN WALKER, P.E.
DEP. DIR. OF STRUCTURES, ASST. STATE BRIDGE ENGINEER - SCOTT WESTERFIELD, P.E.

△1

ADDENDUM

STATE	PROJECT NO.
MISS.	EXP-0051-02(021)

PLATE 58

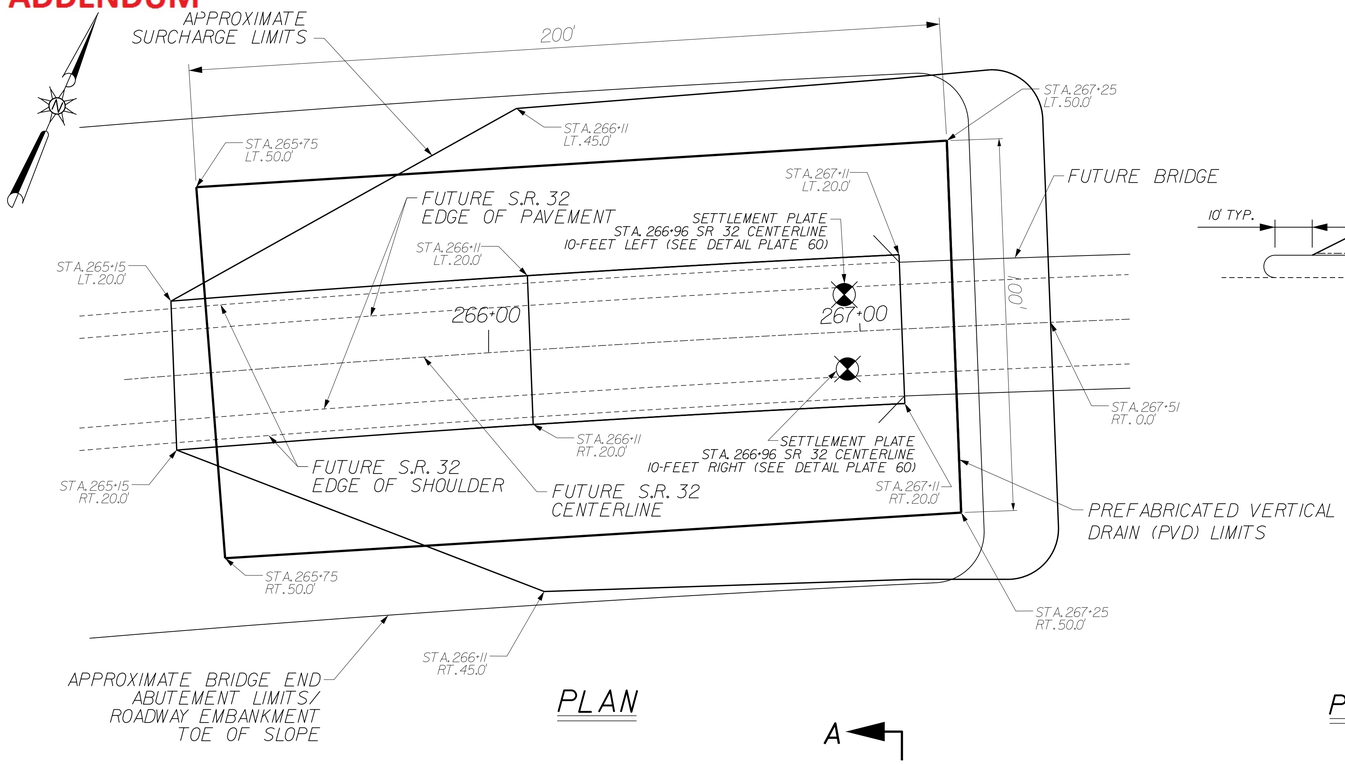

PLAN

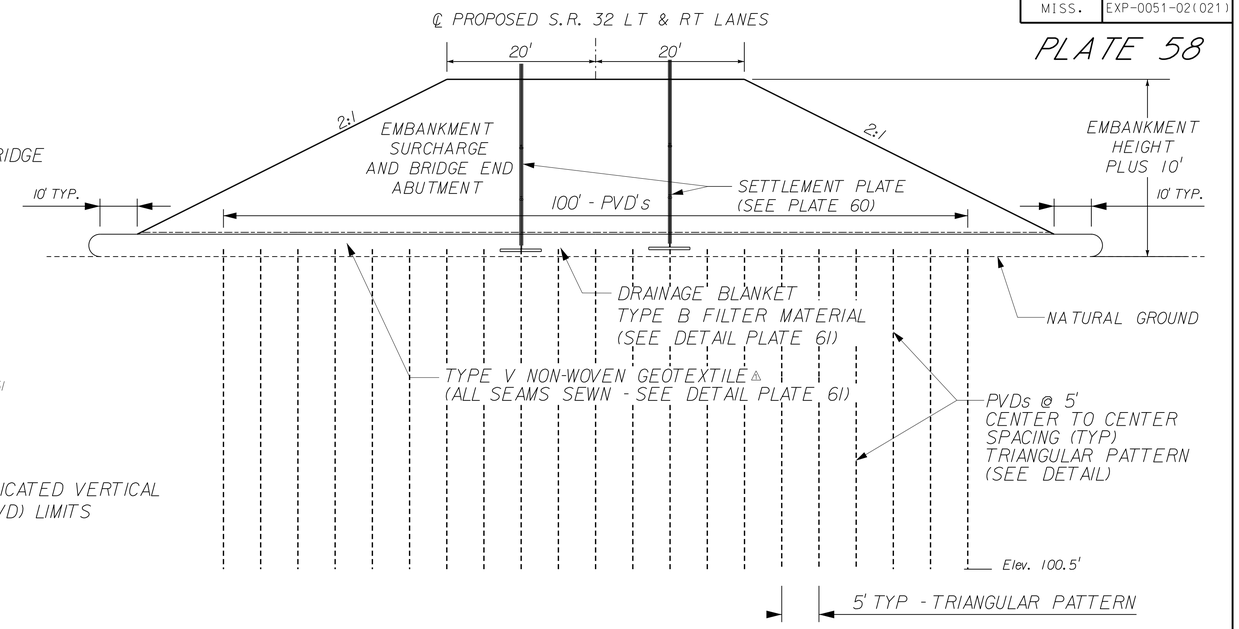

SECTION A-A

PREFABRICATED VERTICAL DRAINS AT BRIDGE END ABUTMENT

(NTS)

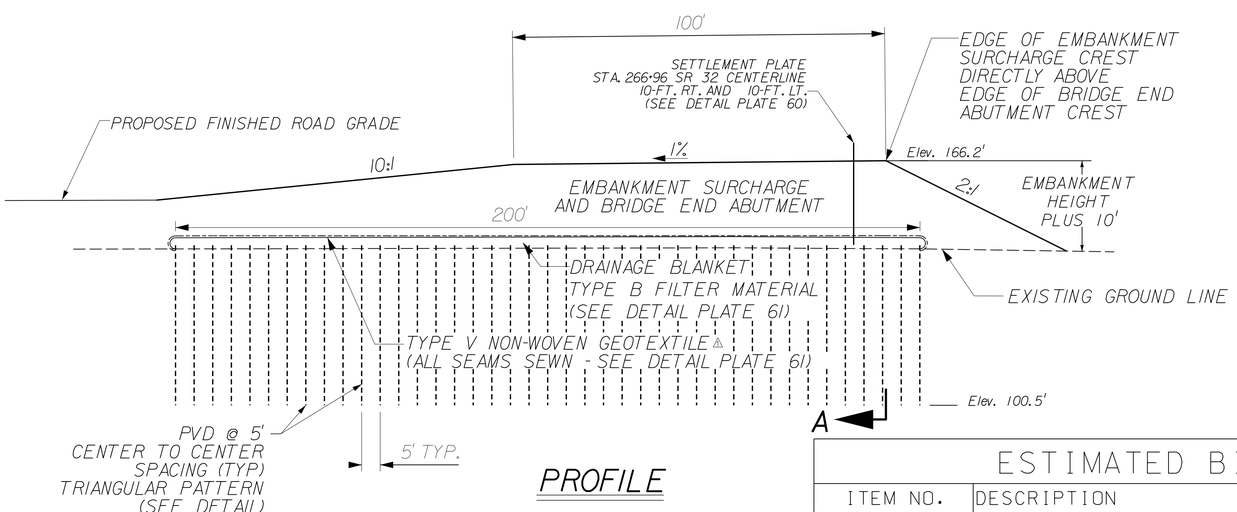

PROFILE

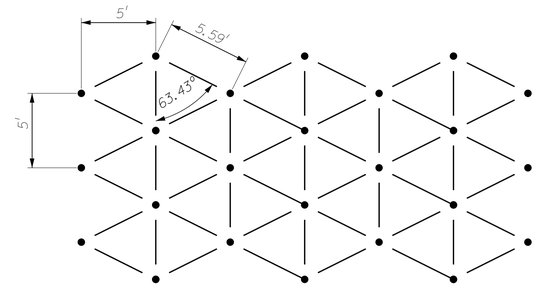

PVD INSTALLATION PATTERN

(NTS)

MDOT SPECIFICATIONS : SECTION 610 - DRAINAGE WICKS

ESTIMATED BID ITEM QUANTITIES

ITEM NO.	DESCRIPTION	UNIT	QUANTITY
610-A001	DRAINAGE WICKS (WEST ABUTMENT)	LF	39,600

GENERAL NOTES:

1. PVDs SHALL CONSIST OF NEWLY MANUFACTURED MATERIALS AND THE ASSEMBLED DRAIN SHALL CONSIST OF A CONTINUOUS PLASTIC DRAINAGE CORE WRAPPED IN A NON-WOVEN GEOTEXTILE MATERIAL JACKET. THE JACKET SHALL ALLOW THE FREE PASSAGE OF PORE WATER TO THE CORE WITHOUT LOSS OF SOIL MATERIAL OR PIPING. THE CORE SHALL PROVIDE CONTINUOUS VERTICAL DRAINAGE.
2. PVDs ARE TO BE INSTALLED USING APPROVED EQUIPMENT OF THE TYPE THAT WILL CAUSE MINIMUM DISTURBANCE OF THE SUBSOIL DURING INSTALLATION. USE OF A VIBRATOR, IMPACT HAMMER OR JETTING TECHNIQUES WILL NOT BE PERMITTED.
3. INSTALL PVDs USING A MANDEL OR SLEEVE THAT INSERTS THE DRAIN INTO THE SOIL. THE MANDREL OR SLEEVE SHALL PROTECT THE DRAIN MATERIAL FROM TEARS, CUTS OR ABRASION DURING INSTALLATION.
4. PVDs THAT ARE MORE THAN 6-INCHES FROM PLAN LOCATIONS OR ARE DAMAGED SHALL BE REPLACED. INSTALL PVDs FROM THE GROUND SURFACE TO THE DEPTHS INDICATED. RAISING AND LOWERING OF MANDREL DURING INSTALLATION IS NOT PERMITTED. INSTALL PVDs WITH A CONSTANT LOAD OR CONSTANT RATE. DO NOT DEVIATE MORE THAN 5-INCHES IN 10-FEET VERTICAL DURING DRAIN INSTALLATION.
5. SPLICE OR CONNECT PVD MATERIAL TO PROVIDE CONTINUITY OF THE PVD MATERIAL. PROVIDE 4- TO 8-INCH LENGTH OF PVD MATERIAL EXTENSION ABOVE THE DRAINAGE LAYER SURFACE AT EACH LOCATION.
6. SPLICE PVD MATERIAL BY STAPLING. PROVIDE SLPICES WITH STRUCTURAL AND HYDRAULIC CONTINUITY OF THE DRAIN. A MAXIMUM OF ONE SPLICE PER DRAIN IS PERMITTED.

DRAWING FILE: 926805S2.DGN | REPORT NO.: 92-68-05S2

DATE	REVISIONS	BY
01/12/16	△ Geotextile Type V. Non-Woven	CMC

MISSISSIPPI DEPARTMENT OF TRANSPORTATION
WEST BRIDGE ABUTMENT PVD DETAILS
S.R. 32 OVER BLUE SLOUGH
STATION NO.: 267+11.21
SITE NO: 91-68-1442
102383/301000
PROJECT NO: EXP-0051-02(021)
COUNTY: TALLAHATCHIE

DESIGNED: C.M.C. DETAILED: C.M.C. DRAWN: CADD
CHECKED: M.L.S. ISSUED: R.S.F. DATE: 09-22-15

WORKING NUMBER C14 OF 17
SHEET NUMBER 8049

ADDENDUM

STATE	PROJECT NO.
MISS.	EXP-0051-02(021)

PLATE 59

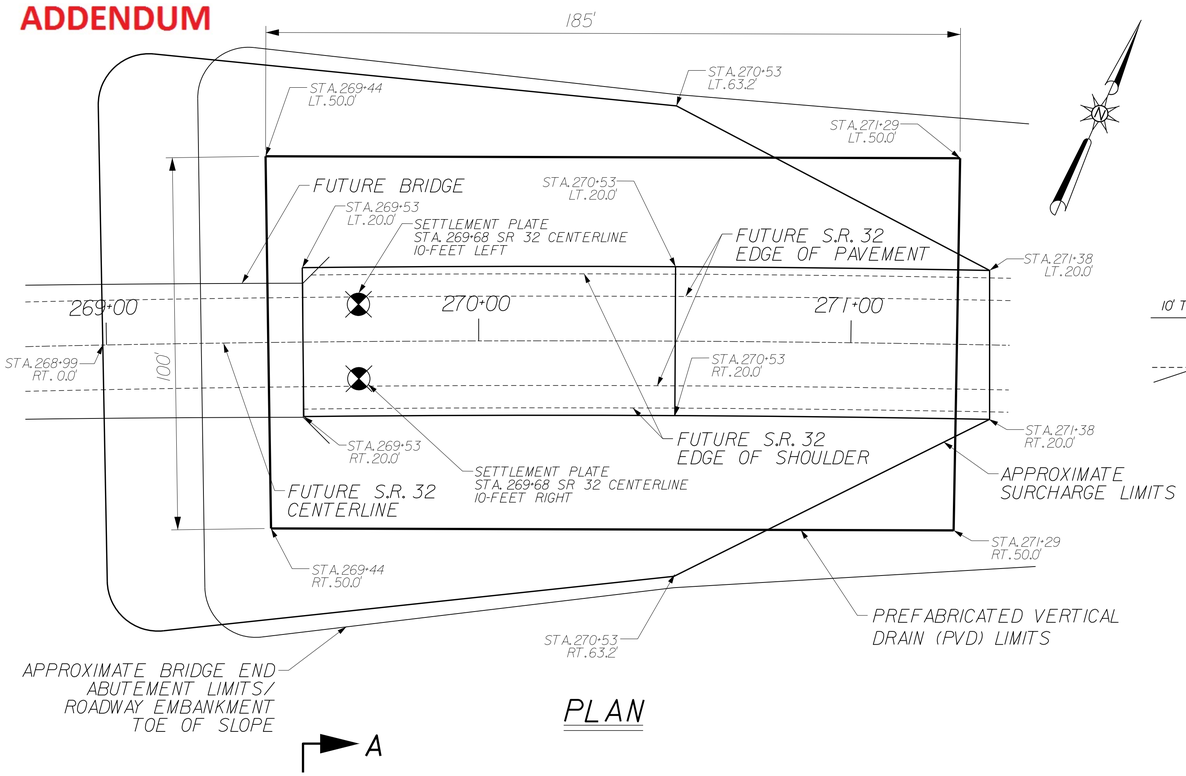

PLAN

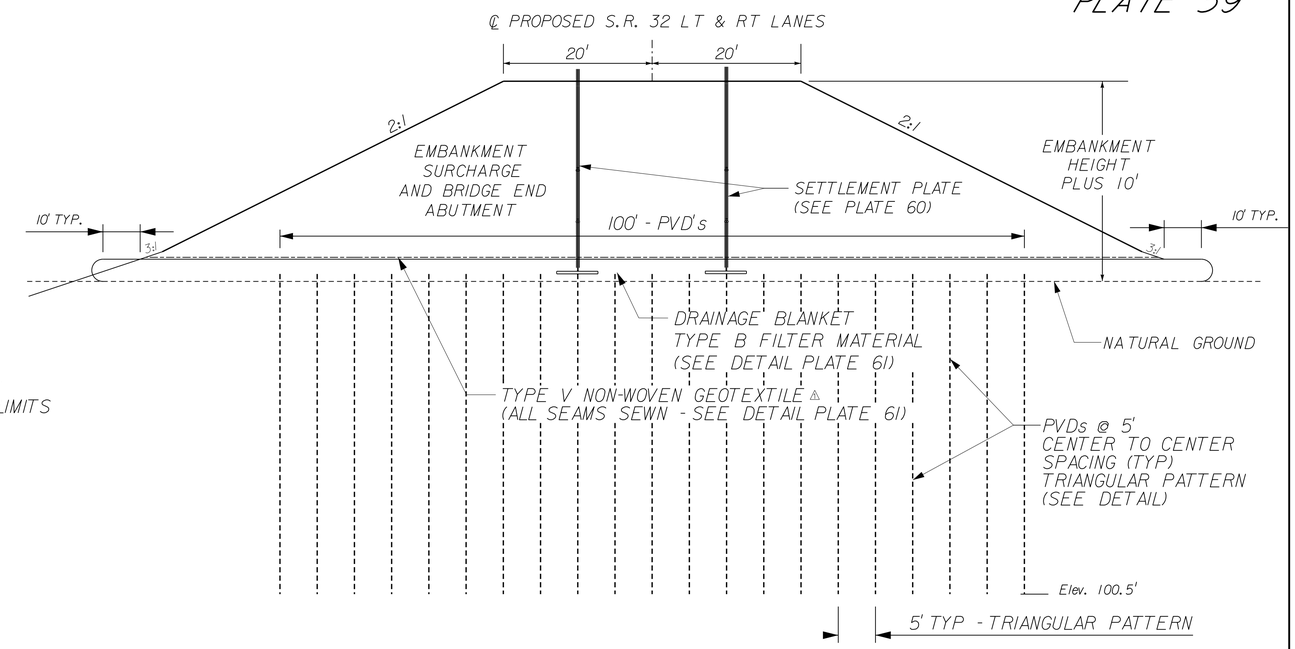

SECTION A-A

PREFABRICATED VERTICAL DRAINS AT BRIDGE END ABUTMENT

(NTS)

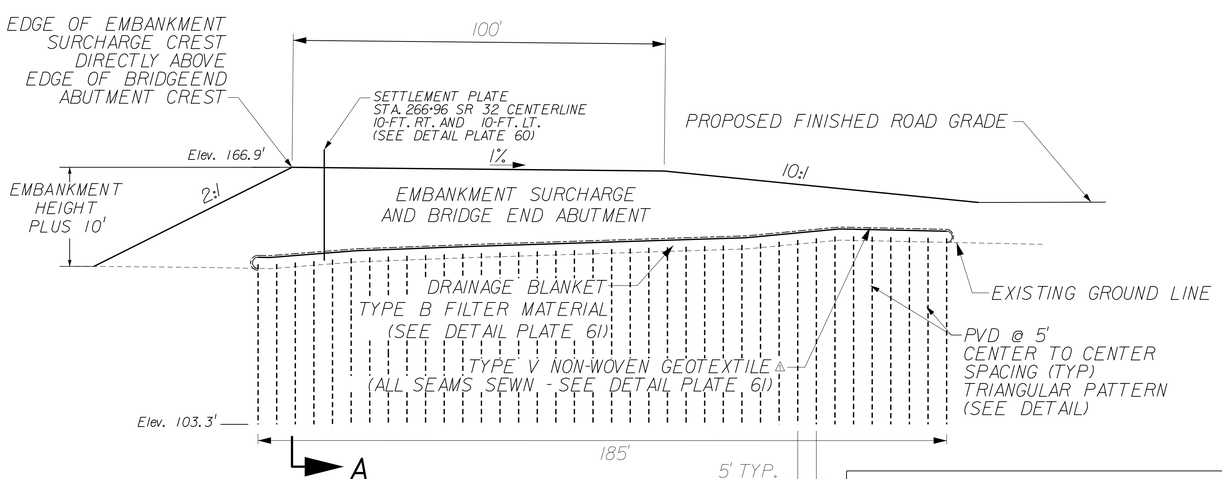

PROFILE

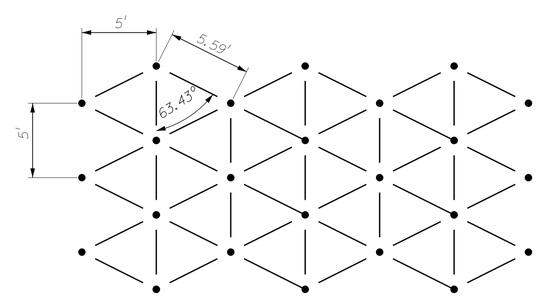

PVD INSTALLATION PATTERN

(NTS)

MDOT SPECIFICATIONS : SECTION 610 - DRAINAGE WICKS

ESTIMATED BID ITEM QUANTITIES

ITEM NO.	DESCRIPTION	UNIT	QUANTITY
610-A001	DRAINAGE WICKS (EAST ABUTMENT)	LF	39.600

GENERAL NOTES:

1. PVDs SHALL CONSIST OF NEWLY MANUFACTURED MATERIALS AND THE ASSEMBLED DRAIN SHALL CONSIST OF A CONTINUOUS PLASTIC DRAINAGE CORE WRAPPED IN A NON-WOVEN GEOTEXTILE MATERIAL JACKET. THE JACKET SHALL ALLOW THE FREE PASSAGE OF PORE WATER TO THE CORE WITHOUT LOSS OF SOIL MATERIAL OR PIPING. THE CORE SHALL PROVIDE CONTINUOUS VERTICAL DRAINAGE.
2. PVDs ARE TO BE INSTALLED USING APPROVED EQUIPMENT OF THE TYPE THAT WILL CAUSE MINIMUM DISTURBANCE OF THE SUBSOIL DURING INSTALLATION. USE OF A VIBRATOR, IMPACT HAMMER OR JETTING TECHNIQUES WILL NOT BE PERMITTED.
3. INSTALL PVDs USING A MANDEL OR SLEEVE THAT INSERTS THE DRAIN INTO THE SOIL. THE MANDREL OR SLEEVE SHALL PROTECT THE DRAIN MATERIAL FROM TEARS, CUTS OR ABRASION DURING INSTALLATION.
4. PVDs THAT ARE MORE THAN 6-INCHES FROM PLAN LOCATIONS OR ARE DAMAGED SHALL BE REPLACED. INSTALL PVDs FROM THE GROUND SURFACE TO THE DEPTHS INDICATED. RAISING AND LOWERING OF MANDREL DURING INSTALLATION IS NOT PERMITTED. INSTALL PVDs WITH A CONSTANT LOAD OR CONSTANT RATE. DO NOT DEVIATE MORE THAN 5-INCHES IN 10-FEET VERTICAL DURING DRAIN INSTALLATION.
5. SPLICE OR CONNECT PVD MATERIAL TO PROVIDE CONTINUITY OF THE PVD MATERIAL. PROVIDE 4- TO 8-INCH LENGTH OF PVD MATERIAL EXTENSION ABOVE THE DRAINAGE LAYER SURFACE AT EACH LOCATION.
6. SPLICE PVD MATERIAL BY STAPLING. PROVIDE SLPICES WITH STRUCTURAL AND HYDRAULIC CONTINUITY OF THE DRAIN. A MAXIMUM OF ONE SPLICE PER DRAIN IS PERMITTED.

DRAWING FILE: 926805S2.DGN | REPORT NO.: 92-68-05S2

DATE	REVISIONS	BY
01/12/16	Geotextile Type V. Non-Woven	CMC

MISSISSIPPI DEPARTMENT OF TRANSPORTATION
EAST BRIDGE ABUTMENT PVD DETAILS
S.R. 32 OVER BLUE SLOUGH
STATION NO.: 269+52.79
SITE NO: 91-68-1442
102383/301000
PROJECT NO: EXP-0051-02(021)
COUNTY: TALLAHATCHIE

DESIGNED: C.M.C. DETAILED: C.M.C. DRAWN: CADD
CHECKED: M.L.S. ISSUED: R.S.F. DATE: 02-27-15

WORKING NUMBER C15 OF 17
SHEET NUMBER 8050

ADDENDUM

STATE	PROJECT NO.
MISS.	EXP-0051-02(021)

PLATE 61

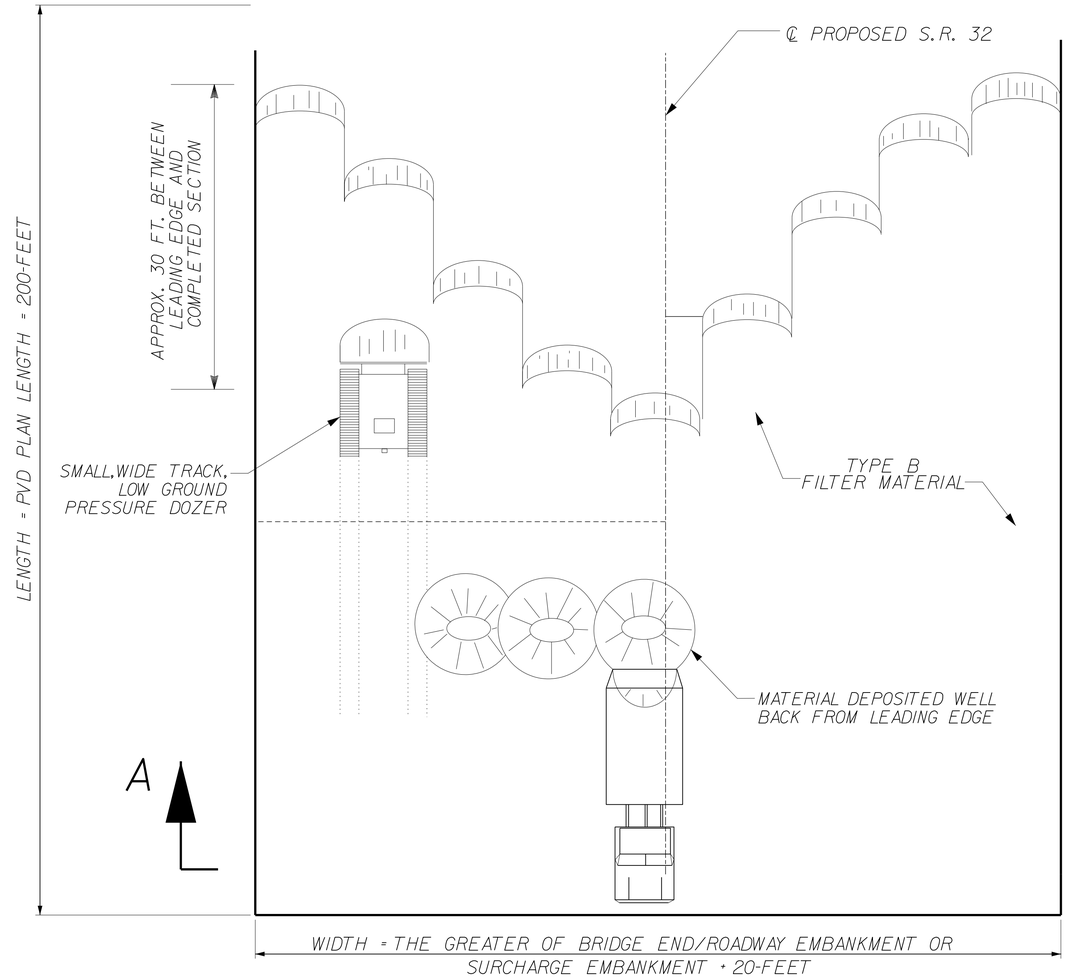

DRAINAGE BLANKET PLAN

(NTS)

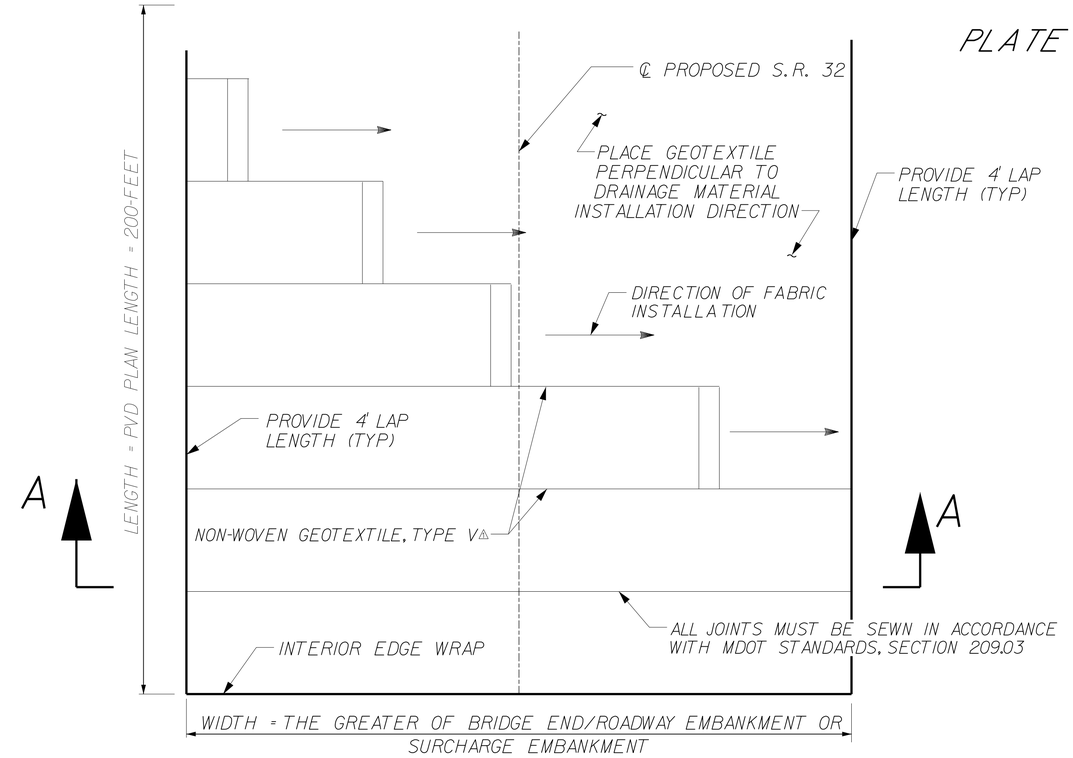

GEOTEXTILE PLAN

(NTS)

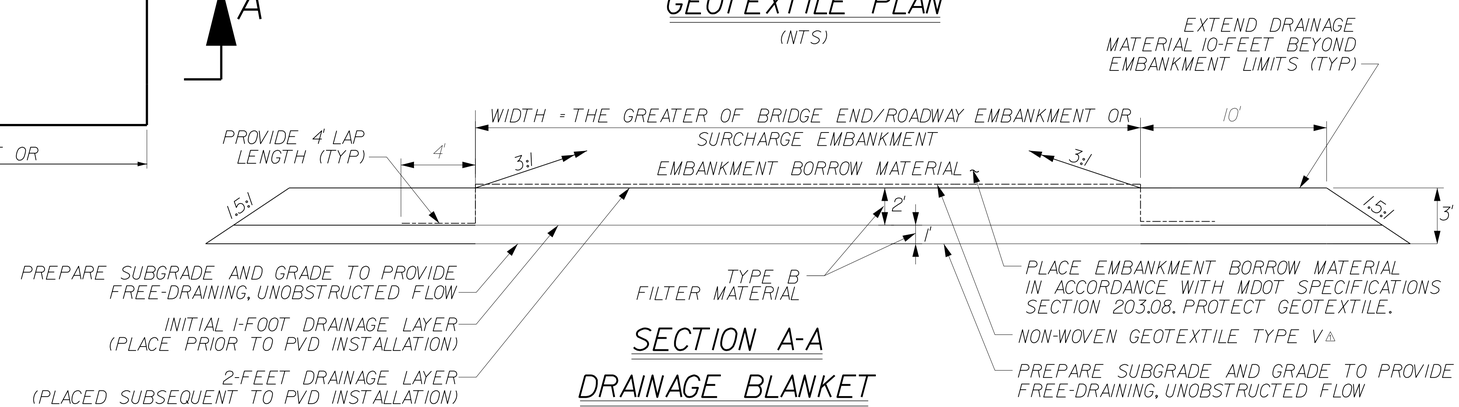

SECTION A-A
DRAINAGE BLANKET

(NTS)

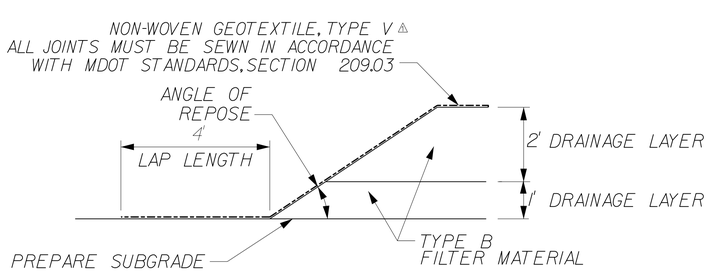

INTERIOR EDGE WRAP

(NTS)

GENERAL NOTES:

1. REMOVE VEGETATION AND TOPSOIL. PREPARE SUBGRADE TO DRAIN.
2. PLACE 1-FOOT LAYER OF DRAINAGE MATERIAL IN SINGLE LAYER PRIOR TO INSTALLATION OF PVDs.
3. PLACE 2-FOOT LAYER OF DRAINAGE MATERIAL IN SINGLE LAYER SUBSEQUENT TO PVD INSTALLATION AND COMPACT USING VIBRATORY COMPACTOR.
4. MDOT NON-WOVEN TYPE VI GEOTEXTILE SHALL BE PLACED PERPENDICULAR TO AGGREGATE DRAINAGE MATERIAL PLACEMENT PATTERN. SEW JOINTS IN ACCORDANCE WITH MDOT SPECIFICATIONS. SECTION 209.03. WRAP ALL EDGES.
5. PLACE EMBANKMENT BORROW MATERIAL ABOVE DRAINAGE BLANKET IN ACCORDANCE WITH MDOT SPECIFICATIONS. SECTION 203.08 WITH THE FOLLOWING EXCEPTIONS:
   A. INITIAL LAYER OF EMBANKMENT BORROW MATERIAL SHALL BE 18-INCHES THICK.
   B. PLACE BORROW MATERIAL IN ACCORDANCE WITH THE DRAINAGE BLANKET SCHEMATIC USING LOW GROUND PRESSURE DOZER TO ADVANCE LEADING EDGE OF BORROW MATERIAL APPROXIMATELY 30' BEYOND COMPLETED SECTION.
   C. BORROW MATERIAL SECTION DEEMED COMPLETE WHEN MATERIAL HAS BEEN COMPACTED WITH A MINIMUM OF FOUR (4) PASSES OF LGP DOZER.

DRAWING FILE: 926805S2.DGN | REPORT NO.: 92-68-05S2

DATE	REVISIONS	BY
△01/12/16	Geotextile Type V, Non-Woven	CMC

MISSISSIPPI DEPARTMENT OF TRANSPORTATION
PVD DRAINAGE BLANKET
S.R. 32 OVER BLUE SLOUGH
STATION NO.: 267+11.21
SITE NO: 91-68-1442
102383/301000
PROJECT NO: BR-0051-02(021)
COUNTY: TALLAHATCHIE

DESIGNED: C.M.C. DETAILED: C.M.C. DRAWN: CADD
CHECKED: M.L.S. ISSUED: R.S.F. DATE: 09-22-15

WORKING NUMBER C17 OF 17
SHEET NUMBER 8052