SECTION 905 -- PROPOSAL (CONTINUED)

I (We) hereby certify by digital signature and electronic submission via Bid Express of the Section 905 proposal below, that all certifications, disclosures and affidavits incorporated herein are deemed to be duly executed in the aggregate, fully enforceable and binding upon delivery of the bid proposal. I (We) further acknowledge that this certification shall not extend to the bid bond or alternate security which must be separately executed for the benefit of the Commission. This signature does not cure deficiencies in any required certifications, disclosures and/or affidavits. I (We) also acknowledge the right of the Commission to require full and final execution on any certification, disclosure or affidavit contained in the proposal at the Commission's election upon award. Failure to so execute at the Commission's request within the time allowed in the Standard Specifications for execution of all contract documents will result in forfeiture of the bid bond or alternate security.

Bidder acknowledges receipt of and has added to and made a part of the proposal and contract documents the following addendum (addenda):

ADDENDUM NO.	1	DATED	3/16/2016	ADDENDUM NO.		DATED	
ADDENDUM NO		DATED		ADDENDUM NO.		DATED	

Number	Description
1	Revised Table of Contents; Revised NTB Nos. 6028, 6031, & 6047; Add NTB No. 6224; Revised Bid Items; Added or Revised Plan Sheet Nos. 2, 10-11, 16, 24, 30, 32, 36, 39, 43, 59, 2002, 8001, & 8192; Amendment EBS Download Required.

TOTAL ADDENDA: 1
(Must agree with total addenda issued prior to opening of bids)

Respectfully Submitted,

DATE _____

_____
Contractor

BY _____
Signature

TITLE _____

ADDRESS _____

CITY, STATE, ZIP _____

PHONE _____

FAX _____

E-MAIL _____

(To be filled in if a corporation)

Our corporation is chartered under the Laws of the State of _____ and the names, titles and business addresses of the executives are as follows:

_____
President Address

_____
Secretary Address

_____
Treasurer Address

The following is my (our) itemized proposal.

IM-0055-02(246)/106023309

Hinds County(ies)

Revised 01/26/2016

For Informational Purposes Only

MISSISSIPPI DEPARTMENT OF TRANSPORTATION
TABLE OF CONTENTS

PROJECT: IM-0055-02(246)/106023309 - Hinds

Section 901 - Advertisement

Section 904 - Notice to Bidders

#1	Governing Specifications
#3	Final Cleanup
#640	Fiber Reinforced Concrete
#927	Use of Fly Ash in Stone Matrix Asphalt (SMA)
#1405	Errata & Modifications to 2004 Standard Specifications
#1928	Federal Bridge Formula
#2382	Status of ROW, w/ Attachments
#3131	Temporary Traffic Paint
#3581	Storm Water Discharge Associated w/ Construction Activities (>5 Acres)
#3704	Use of Precast Drainage Units
#3893	Petroleum Products Base Price
#4189	Rumble Stripe
#4214	Safety Apparel
#4300	Exposure to Severe Sulfate Areas Below Ground Level
#4473	Alternate Crushed Stone Base Bid Items
#4526	Electronic Addendum Process
#4565	Manual on Uniform Traffic Control Devices (MUTCD)
#5044	Questions Regarding Bidding
#5053	Contractor Correspondence
#5252	Terminal End Sections
#5266	Disadvantaged Business Enterprise, w/ Supplement
#5405	Traffic Control Devices
#5412	Weight Limits
#5556	DUNS Requirement for Federal Funded Projects
#5824	Adjustments for Bituminous Materials
#5865	Non-Quality Control / Quality Assurance Concrete
#5866	Payroll Requirements
#5896	DBE Forms, Participation and Payment
#6024	Contract Time
#6025	Specialty Items
#6026	Placement of Fill Material in Federally Regulated Areas
#6027	A+B Bidding
#6028	Liquidated Damages
#6029	Cooperation between Contractors
#6030	MDOT Furnished Materials
#6031	Lane Closure Restrictions
#6032	Additional Erosion Control Requirements
#6033	AT&T Utility
#6034	Atmos Utility
#6035	Portable Construction Lighting

#6036	Existing Traffic Control
#6037	Gulf South Utility
#6038	Mowing and Litter Pickup
#6039	Location & Configuration of OTN Nodes
#6040	Traffic Management Center (TMC) Modifications
#6041	Traffic Recorder Classification Permanent System
#6042	Work Restrictions
#6043	Waiting Periods
#6044	Sign Trusses
#6045	Substitution for Jacked or Bored Concrete Pipe
#6046	Maintenace of Existing Traffic and Erosion Control
#6047	Ramp Restrictions
#6048	Contractor-Provided PDA Testing of Retaining Wall Piling
#6138	Construction Access
#6224	Frontage Road Closures

906	Required Federal Contract Provisions -- FHWA 1273, w/Supplements

Section 907 - Special Provisions

907-101-4	Definitions
907-102-12	Bidding Requirements and Conditions
907-103-11	Award and Execution
907-104-5	Scope of Work
907-104-6	Partnering Process
907-105-8	Control of Work
907-107-13	Legal Relations and Responsibility to Public, w/Supplement
907-107-14	Contractor's Protection Plan, w/ Supplement
907-108-37	Prosecution and Progress, w/ Supplement
907-109-8	Measurement and Payment
907-110-2	Wage Rates
907-216-1	Solid Sodding
907-225-5	Grassing
907-226-3	Temporary Grassing
907-227-10	Hydroseeding
907-234-5	Siltation Barriers
907-237-4	Wattles
907-245-2	Triangular Silt Dikes
907-246-3	Sandbags & Rockbags
907-249-1	Riprap for Erosion Control
907-251-3	Maintenance of Existing Erosion Control Devices
907-270-1	Temporary Site Drainage
907-304-13	Granular Courses
907-307-4	Lime Treated Courses
907-308-4	Portland Cement Treated Courses, w/Supplement
907-311-3	Lime-Fly Ash Treated Courses
907-401-5	Stone Matrix Asphalt (SMA), w/ Supplement
907-401-7	Asphalt Pavements
907-402-6	Open Graded Friction Course, w/ Supplement

907-403-13	Stone Matrix Asphalt (SMA), w/ Supplement
907-403-14	Asphalt Pavements
907-406-4	Cold Milling
907-407-2	Tack Coat
907-413-5	Sawing & Sealing Transverse Joints in Asphalt Pavement
907-503-2	Replacement of Concrete Pavement
907-601-1	Structural Concrete
907-603-8	Culverts & Storm Drains
907-604-6	Trench Drains
907-605-3	Underdrains
907-606-8	High Tension Cable Barrier
907-618-9	Placement of Temporary Traffic Stripe
907-618-13	Temporary Construction Signs
907-618-16	Service Patrol
907-619-2	Glare Paddles
907-619-5	Changeable Message Signs
907-619-6	Impact Attenuators
907-622-6	Engineer's Field Office Building
907-626-25	Thermoplastic Traffic Markings
907-630-13	Sign Supports
907-631-1	Flowable Fill
907-637-5	ITS Equipment Cabinets
907-639-8	Traffic Signal and ITS Equipment Poles
907-642-5	Solid State Traffic Activated Controllers Type 8 A
907-644-2	Optical Emergency Vehicle Priority Control System
907-649-5	Video Vehicle Detection
907-650-9	On-Street Video Equipment
907-656-11	Dynamic Message Sign
907-657-12	Fiber Optic Cable (OSP)
907-658-8	Networking Equipment
907-659-4	Traffic Management Center (TMC) Modifications
907-660-7	Communications Node
907-668-1	Traffic Signal Conduit
907-670-2	ITS Radar Detection System
907-680-1	Portable Construction Lighting
907-681-2	Submittal Data
907-681-6	Wire and Conduit Testing
907-682-12	Branch Circuit Wire
907-682-13	Roadway Lighting System
907-687-16	Traffic Recorder Classification System
907-699-5	Construction Stakes
907-701-5	Hydraulic Cement, w/ Supplement
907-702-5	Specifications for Bituminous Materials
907-703-12	Aggregates, w/ Supplement
907-707-5	Joint Material
907-708-6	Non-Metal Drainage Structures
907-709-1	Metal Pipe

PROJECT: IM-0055-02(246)/106023309 - Hinds

907-710-1	Fast Dry Solvent Traffic Paint
907-711-4	Synthetic Structural Fiber Reinforcement
907-713-5	Admixtures for Concrete
907-714-3	Stabilizing Fibers
907-714-8	Miscellaneous Materials
907-715-4	Roadside Development Materials
907-720-2	Pavement Marking Materials
907-804-19	Concrete Bridges and Structures
907-823-8	Preformed Joint Seal, w/ Attachments
907-825-3	Soil Nail Retaining Walls

906-7	Training Special Provisions

Section 905 - Proposal, Proposal Bid Items, Combination Bid Proposal
Certification of Performance - Prior Federal-Aid Contracts
Certification Regarding Non-Collusion, Debarment and Suspension
SAM.GOV Registration and DUNS Number
Section 902 - Contract Form
Section 903 - Contract Bond Forms
Form -- OCR-485

Pile Data Form

(REVISIONS TO THE ABOVE WILL BE INDICATED ON THE SECOND SHEET
OF SECTION 905 AS ADDENDA)

03/16/2016 10:15 AM

MISSISSIPPI DEPARTMENT OF TRANSPORTATION

SECTION 904 - NOTICE TO BIDDERS NO. 6028 **CODE: (SP)**

DATE: **01/22/2016**

SUBJECT: **Liquidated Damages**

PROJECT: **IM-0055-02(246) / 106023309 – Hinds County**

Bidders are hereby advised to disregard the values in the "Schedule of Deductions for Each Day of Overrun in Contract Time" table shown in Subsection 907-108.07 of Special Provision 907-108-37.

Liquidated Damages for this project shall be **$50,000.00** per calendar day which is applicable to each calendar day after the Contractor determined completion date and shall continue until all work under the contract has been met.

Liquidated damages for this project is a combination of both liquidated damages and road user costs.

MISSISSIPPI DEPARTMENT OF TRANSPORTATION

SECTION 904 - NOTICE TO BIDDERS NO. 6031 **CODE: (SP)**

DATE: 06/01/2015

SUBJECT: Lane Closure Restrictions

PROJECT: IM-0055-02(246) / 106023309 – Hinds County

Bidders are hereby advised of the following lane closure restrictions for this project:

Interstate

1. Lane closures will not be allowed anytime during head to head phasing (traffic separated by a single line of median barrier), unless specifically ordered by the Engineer.
2. While traffic is in a four-lane configuration, and not head to head, lane closures will not be allowed Monday through Thursday between the hours of 6:00 AM and 7:00 PM, and Friday between the hours of 6:00 AM and 8:00 PM.
3. When traffic is open to six lanes, a single lane closure will be allowed Monday through Friday except between the hours of 6:00 AM to 9:00 AM and from 4:00 PM to 7:00 PM.
4. When traffic is open to six lanes, a two lane closure will be allowed Monday through Thursday except between the hours of 6:00 AM and 7:00 PM, and on Friday except between the hours of 6:00 AM and 8:00 PM.
5. The maximum length of lane closure shall not exceed 3 miles. Multiple lane closures in the same lane shall be at least 1 mile apart.

Frontage Roads

1. Lane closures will not be allowed Monday through Friday between the hours of 6:00 AM and 9:00 AM and from 4:00 PM to 7:00 PM.
2. While traffic is in head to head phasing on the interstate, lane closures will be allowed on the frontage road anytime other than listed above; however, if an accident occurs on the interstate the Engineer will have the authority to order the Contractor to remove the lane closure to help handle the traffic.
3. The maximum length of lane closure shall not exceed 1 mile. Multiple lane closures in the same lane shall be at least 1 mile apart.

No exceptions to the above requirements will be allowed, unless specifically allowed by the Engineer. Also, no lane closures will be permitted on the following holidays or the day preceding them: New Year's Day, Easter, Independence Day, Labor Day, Thanksgiving Day or Christmas Day. In the event that one of the previously mentioned holidays falls during the weekend or on a Monday, no lane closures will be allowed during that weekend or the Friday immediately preceding that holiday. In addition, if the holiday falls on a Friday, no lane closures will be allowed on the following Saturday or Sunday. If any of the lane closure restrictions listed above is violated, no excuses will be accepted by the Department and the Contractor will be charged a fee of $2,500.00 for each full or partial five minute period until the roadway is back in compliance with the lane closure restrictions listed above.

For the purposes of this contract, official time shall be the announced time available at the Jackson area telephone number (601) 355-9311.

MISSISSIPPI DEPARTMENT OF TRANSPORTATION

SECTION 904-NOTICE TO BIDDERS NO. 6047

DATE: 03/15/2016

SUBJECT: Ramp Restrictions

PROJECT: IM-0055-02(246) / 106023309 – Hinds County

Bidders are hereby advised that the Contractor shall not close any two consecutive on-ramps or off-ramps at any given time. In addition, at no time will an entire interchange be closed (this does not apply to the Daniel Lake interchange since there is only a southbound off-ramp and a northbound on-ramp). The maximum time any ramp may be closed for a consecutive time period is 30 days.

Bidders are further advised that the NE ramp and SE loop at Siwell Road cannot be closed simultaneously. Also, the NW Ramp at Siwell Road can only be closed from 8:00 PM on Friday until 11:00 AM on Monday.

No variation from the above listed times will be allowed unless specifically granted by the Engineer.

Failure to adhere to the above listed restrictions will result in the Contractor being assessed a fee of $20,000.00 for each full or partial day until the ramp is re-opened. This fee will apply to each ramp should multiple ramps be closed simultaneously. In addition, the Engineer will have the authority to stop all other work on the project until this work is complete and the ramp re-opened to traffic.

MISSISSIPPI DEPARTMENT OF TRANSPORTATION

SECTION 904 - NOTICE TO BIDDERS NO. 6224 **CODE: (SP)**

DATE: **03/15/2016**

SUBJECT: **Frontage Road Closures**

PROJECT: **IM-0055-02(246) / 106023309 – Hinds County**

Reconstruction of the West Frontage Road will be required from Station 775+00 to 788+00. For this reconstruction work, the frontage road within this area may be closed for a maximum of 14 calendar days to complete this work. After 14 calendar days, the Contractor will be assessed a fee of $10,000.00 for each full or partial day until the frontage road is re-opened. In addition, the Engineer will have the authority to stop all other work on the project until this work is complete and the frontage road re-opened to traffic. During this reconstruction work, ramp closures will not be allowed at Elton Road or Savannah Street.

A full closure of the frontage road will be allowed at locations where it is necessary to install cross-drains. For this work, the frontage road may be closed between the hours of 7:00 PM on Friday and 6:00 AM on Monday. For this work, if the frontage road is not back open by 6:00 AM on Monday, the Engineer will suspend all other work on the project until the frontage road is open to traffic.

Reconstruction of approximately 8 miles of I-55 from South of the Byram Interchange to North of McDowell Road (Phase 2) known as Federal Aid Project No. IM-0055-02(246) / 106023309 in Hinds County.

Line No.	Item Code	Adj Code	Quantity	Units	Description [Fixed Unit Price]
			Roadway Items		
0010	201-A001		1	Lump Sum	Clearing and Grubbing
0020	202-B022		25,809	Linear Feet	Removal of Concrete Median Barrier
0030	202-B023		88,826	Linear Feet	Removal of Concrete Median Barrier, Precast
0040	202-B025		459	Square Yard	Removal of Concrete Paved Ditch
0050	202-B036		298	Square Yard	Removal of Concrete Slope Paving
0060	202-B042		19	Each	Removal of Flared End Section, All Sizes
0070	202-B057		95	Each	Removal of Inlets, All Sizes
0080	202-B063		2	Each	Removal of Overhead Sign Including Panels, Truss, Supports & Footing
0090	202-B064		3,049	Linear Feet	Removal of Pipe, 8" And Above
0100	202-B070		137	Each	Removal of Sign Including Post & Footing
0110	202-B072		1,000	Square Yard	Removal of Soil Cement Treated Base, All Depths
0120	202-B078		340,959	Square Yard	Removal of Pavement, All Types and Depths
0130	202-B102		2,942	Linear Feet	Removal of Guard Rail
0150	202-B142		7	Each	Removal of Junction Box
0160	202-B149		4	Mile	Removal of Traffic Stripe
0170	202-B189		17	Each	Removal of Impact Attenuator
0180	202-B196		5,000	Linear Feet	Removal of Debris and Sand From Pipe, All Sizes
0190	202-B247		2	Each	Removal of Pull Box
0200	202-B248		1	Each	Removal of Manhole
0210	202-B295		400	Linear Feet	Removal of Trench Drain, All Sizes, All Types
0220	202-B297		1	Each	Removal of Existing Demarcation Cabinet and Equipment
0230	203-A004	(E)	1,000	Cubic Yard	Unclassified Excavation, LVM, AH
0240	203-B004	(E)	1,000	Cubic Yard	Rock Excavation, LVM, AH
0250	203-EX035	(E)	500,065	Cubic Yard	Borrow Excavation, AH, FME, Class B9-6
0260	203-G003	(E)	419,997	Cubic Yard	Excess Excavation, FM, AH
0270	206-A001	(S)	8,502	Cubic Yard	Structure Excavation
0280	209-A004		89,643	Square Yard	Geotextile Stabilization, Type V, Non-Woven
0290	211-B001	(E)	33,680	Cubic Yard	Topsoil for Slope Treatment, Contractor Furnished
0300	213-C001		64	Ton	Superphosphate
0310	217-A001		3,306	Square Yard	Ditch Liner
0320	219-A001		186	Thousand Gallon	Watering [$20.00]
0330	220-A001		64	Acre	Insect Pest Control [$30.00]

Line No.	Item Code	Adj Code	Quantity	Units	Description [Fixed Unit Price]
0340	221-A001	(S)	2,240	Cubic Yard	Portland Cement Concrete Paved Ditch
0350	223-A001		1,000	Acre	Mowing [$50.00]
0360	224-A001		2,680	Square Yard	Soil Reinforcing Mat
0370	234-A001		1,305	Linear Feet	Temporary Silt Fence
0380	239-A001		400	Linear Feet	Temporary Slope Drains
0390	423-A001		28	Mile	Rumble Strips, Ground In
0400	501-E001		288	Linear Feet	Expansion Joints, Without Dowels
0410	502-A001	(C)	298	Square Yard	Reinforced Cement Concrete Bridge End Pavement
0420	503-C007		75,080	Linear Feet	Saw Cut, Full Depth
0430	503-E002		16	Each	Tie Bars, No. 5 Deformed Drilled and Epoxied or Grouted
0440	602-A001	(S)	26,573	Pounds	Reinforcing Steel
0450	603-CA002	(S)	8,306	Linear Feet	18" Reinforced Concrete Pipe, Class III
0460	603-CA003	(S)	1,128	Linear Feet	24" Reinforced Concrete Pipe, Class III
0470	603-CA004	(S)	184	Linear Feet	30" Reinforced Concrete Pipe, Class III
0480	603-CA005	(S)	208	Linear Feet	36" Reinforced Concrete Pipe, Class III
0490	603-CA006	(S)	104	Linear Feet	42" Reinforced Concrete Pipe, Class III
0500	603-CA126	(S)	72	Linear Feet	18" Reinforced Concrete Pipe, Class V, Jacked or Bored
0510	603-CB001	(S)	9	Each	18" Reinforced Concrete End Section
0520	603-CB002	(S)	7	Each	24" Reinforced Concrete End Section
0530	603-CB003	(S)	2	Each	30" Reinforced Concrete End Section
0540	603-CB005	(S)	1	Each	42" Reinforced Concrete End Section
0550	603-CE001	(S)	848	Linear Feet	22" x 13" Concrete Arch Pipe, Class A III
0560	603-CE002	(S)	2,536	Linear Feet	29" x 18" Concrete Arch Pipe, Class A III
0570	603-CE003	(S)	248	Linear Feet	36" x 23" Concrete Arch Pipe, Class A III
0580	603-CE004	(S)	248	Linear Feet	44" x 27" Concrete Arch Pipe, Class A III
0590	603-CE006	(S)	240	Linear Feet	58" x 36" Concrete Arch Pipe, Class A III
0600	603-CF002	(S)	5	Each	29" x 18" Concrete Arch Pipe End Section
0610	603-CF004	(S)	1	Each	44" x 27" Concrete Arch Pipe End Section
0620	603-CF006	(S)	2	Each	58" x 36" Concrete Arch Pipe End Section
0630	603-SB003	(S)	6	Each	18" Branch Connections, Stub into Concrete Box Culvert
0640	603-SB020	(S)	1	Each	18" Branch Connections, Stub into Concrete Pipe
0650	604-A001		32,696	Pounds	Castings
0660	604-B001		31,329	Pounds	Gratings
0670	605-AA005	(S)	10,634	Square Yard	Geotextile for Subsurface Drainage, Type V, Non-Woven

Line No.	Item Code	Adj Code	Quantity	Units	Description [Fixed Unit Price]
0680	605-W001	(GY)	1,094	Cubic Yard	Filter Material for Combination Storm Drain and/or Underdrains,Type A, FM
0690	605-W002	(GY)	7,635	Cubic Yard	Filter Material for Combination Storm Drain and/or Underdrains,Type B, FM
0700	605-Z002		19	Each	Underdrain Appurtenances, Small Animal Guard
0710	605-Z004		19	Each	Underdrain Appurtenances, Sign
0720	605-Z005		19	Each	Underdrain Appurtenances, Concrete Apron, Precast or Cast-In-Place
0730	606-B007		9,350	Linear Feet	Guard Rail, Class A, Type 1, 'W' Beam, Metal Post
0740	606-D012		3	Each	Guard Rail, Bridge End Section, Type I
0750	606-E002		1	Each	Guard Rail, Terminal End Section, Flared
0760	606-E003		16	Each	Guard Rail, Terminal End Section, Non-Flared
0770	609-D002	(S)	455	Linear Feet	Combination Concrete Curb and Gutter Type 2
0780	613-D004		5	Each	Adjustment of Inlet
0790	615-A012	(S)	26,628	Linear Feet	Concrete Type IV Modified, 42" Height, Cast-in-Place Median Barrier
0800	615-A015	(S)	20	Linear Feet	Concrete Bridge End Barrier, 32"
0810	615-A020	(S)	38,579	Linear Feet	Concrete Type III Modified Cast-in-Place Median Barrier, 42" High
0820	616-A001	(S)	120	Square Yard	Concrete Median and/or Island Pavement, 4-inch
0830	616-A003	(S)	32	Square Yard	Concrete Median and/or Island Pavement, 10-inch
0840	619-A1002		71	Mile	Temporary Traffic Stripe, Continuous White
0850	619-A2002		60	Mile	Temporary Traffic Stripe, Continuous Yellow
0860	619-A3006		63	Mile	Temporary Traffic Stripe, Skip White
0870	619-A4006		9	Mile	Temporary Traffic Stripe, Skip Yellow
0880	619-A5001		107,133	Linear Feet	Temporary Traffic Stripe, Detail
0890	619-A6001		7,721	Linear Feet	Temporary Traffic Stripe, Legend
0900	619-A6002		4,018	Square Feet	Temporary Traffic Stripe, Legend
0910	619-C6001		3,420	Each	Red-Clear Reflective High Performance Raised Marker
0920	619-D1001		73	Square Feet	Standard Roadside Construction Signs, Less than 10 Square Feet
0930	619-D2001		605	Square Feet	Standard Roadside Construction Signs, 10 Square Feet or More
0940	619-D4001		126	Square Feet	Directional Signs
0950	619-F1001		2,500	Linear Feet	Concrete Median Barrier, Precast
0960	619-F2001		24,580	Linear Feet	Remove and Reset Concrete Median Barrier, Precast
0970	619-G4005		612	Linear Feet	Barricades, Type III, Double Faced
0980	619-G5001		1,479	Each	Free Standing Plastic Drums
0990	619-J1003		17	Unit	Impact Attenuator, 60 MPH
1000	619-J2002		5	Unit	Impact Attenuator, 60 MPH, Replacement Package

Line No.	Item Code	Adj Code	Quantity	Units	Description [Fixed Unit Price]
1010	620-A001		1	Lump Sum	Mobilization
1020	627-K001		5,912	Each	Red-Clear Reflective High Performance Raised Markers
1030	627-L001		2,554	Each	Two-Way Yellow Reflective High Performance Raised Markers
1040	629-A003		15	Each	Vehicular Impact Attenuator, 70 MPH
1050	630-A001		199	Square Feet	Standard Roadside Signs, Sheet Aluminum, 0.080" Thickness
1060	630-A002		1,469	Square Feet	Standard Roadside Signs, Sheet Aluminum, 0.125" Thickness
1070	630-B001		330	Square Feet	Interstate Directional Signs, Bolted Extruded Aluminum Panels, Ground Mounted
1080	630-B002		3,611	Square Feet	Interstate Directional Signs, Bolted Extruded Aluminum Panels, Overhead Mounted
1090	630-C001		52	Linear Feet	Steel U-Section Posts, 2.0 lb/ft
1100	630-C004		908	Linear Feet	Steel U-Section Posts, 3.0 to 3.5 lb/ft
1110	630-D002		131	Linear Feet	Structural Steel Beams, S4 x 7.7
1120	630-D003		170	Linear Feet	Structural Steel Beams, W6 x 9
1130	630-E001		199	Pounds	Structural Steel Angles & Bars, 3" x 3" x 1/4" Angles
1140	630-E004		1,135	Pounds	Structural Steel Angles & Bars, 7/16" x 2 1/2" Flat Bar
1150	630-F001		269	Each	Delineators, Guard Rail, White
1160	630-F002		28	Each	Delineators, Guard Rail, Yellow
1170	630-F006		86	Each	Delineators, Post Mounted, Single White
1180	630-F007		33	Each	Delineators, Post Mounted, Single Yellow
1190	630-F008		94	Each	Delineators, Post Mounted, Double White
1200	630-F009		7	Each	Delineators, Post Mounted, Double Yellow
1210	630-G006		6	Each	Type 3 Object Markers, OM-3R or OM-3L
1220	630-K001		99	Linear Feet	Welded & Seamless Steel Pipe Posts, 3"
1230	630-K002		324	Linear Feet	Welded & Seamless Steel Pipe Posts, 3 1/2"
1240	630-K003		393	Linear Feet	Welded & Seamless Steel Pipe Posts, 4"
1250	630-K004		143	Linear Feet	Welded & Seamless Steel Pipe Posts, 5"
1260	635-A001		1,488	Linear Feet	Vehicle Loop Assemblies
1270	636-A001		1,610	Linear Feet	Shielded Cable, AWG #18, 4 Conductor
1280	638-A005		5	Each	Loop Detector Amplifier, Card Rack Mounted, 4 Channel
1290	640-A016		12	Each	Traffic Signal Heads, Type 1 LED
1300	640-A018		2	Each	Traffic Signal Heads, Type 3 LED
1310	640-A056		6	Each	Traffic Signal Heads, Type 2 FYA LED
1340	647-A002		1	Each	Pullbox, Type 3
1350	647-A003		13	Each	Pullbox, Type 4

Line No.	Item Code	Adj Code	Quantity	Units	Description [Fixed Unit Price]
1360	647-A004		7	Each	Pullbox, Type 5
1370	647-A005		34	Each	Pullbox, Type 2
1380	653-B001		54	Square Feet	Street Name Sign, Encapsulated Lens
1390	666-B015		475	Linear Feet	Electric Cable, Underground in Conduit, IMSA 20-1, AWG 14, 5 Conductor
1400	666-B023		55	Linear Feet	Electric Cable, Underground in Conduit, IMSA 20-1, AWG 8, 3 Conductor
1410	666-B028		1,700	Linear Feet	Electric Cable, Underground in Conduit, THHN, AWG #6, 3 Conductor
1420	666-B038		5,260	Linear Feet	Electric Cable, Underground in Conduit, THHN, AWG #4, 3 Conductor
1430	666-B040		3,695	Linear Feet	Electric Cable, Underground in Conduit, THHN, AWG #8, 3 Conductor
1440	666-B043		340	Linear Feet	Electric Cable, Underground in Conduit, THHN, AWG #2, 4 Conductor
1450	666-B054		1,475	Linear Feet	Electric Cable, Underground in Conduit, IMSA 20-1, AWG 14, 8 Conductor
1460	666-B055		290	Linear Feet	Electric Cable, Underground in Conduit, THHN, AWG #3/0, 3 Conductor
1470	666-C006		170	Linear Feet	Electric Cable, Aerial Supported, IMSA 20-1, AWG 14, 5 Conductor
1480	666-C017		297	Linear Feet	Electric Cable, Aerial Supported, IMSA 20-1, AWG 14, 8 Conductor
1490	668-A018		825	Linear Feet	Traffic Signal Conduit, Underground, Type 4, 2"
1500	668-A020		95	Linear Feet	Traffic Signal Conduit, Underground, Type 4, 3"
1510	668-A029		4,845	Linear Feet	Traffic Signal Conduit, Underground, Rolled Pipe, 2"
1520	668-B024		1,280	Linear Feet	Traffic Signal Conduit, Underground Drilled or Jacked, Rolled Pipe, 2"
1530	668-B025		665	Linear Feet	Traffic Signal Conduit, Underground Drilled or Jacked, Rolled Pipe, 3"
1540	682-A001		1,150	Linear Feet	Underground Branch Circuit, AWG 1, 3 Conductor
1550	682-A004		125	Linear Feet	Underground Branch Circuit, AWG 1/0, 3 Conductor
1560	682-A015		21,495	Linear Feet	Underground Branch Circuit, AWG 2, 3 Conductor
1570	682-A020		100	Linear Feet	Underground Branch Circuit, AWG 2/0, 3 Conductor
1580	682-A025		2,620	Linear Feet	Underground Branch Circuit, AWG 4, 3 Conductor
1590	682-A031		8,920	Linear Feet	Underground Branch Circuit, AWG 6, 3 Conductor
1600	682-A036		330	Linear Feet	Underground Branch Circuit, AWG 8, 3 Conductor
1610	682-B002		100	Linear Feet	Underground Branch Circuit, Jacked or Bored, AWG 1, 3 Conductor
1620	682-B005		65	Linear Feet	Underground Branch Circuit, Jacked or Bored, AWG 1/0, 3 Conductor
1630	682-B016		1,145	Linear Feet	Underground Branch Circuit, Jacked or Bored, AWG 2, 3 Conductor
1640	682-B021		100	Linear Feet	Underground Branch Circuit, Jacked or Bored, AWG 2/0, 3 Conductor
1650	682-B025		150	Linear Feet	Underground Branch Circuit, Jacked or Bored, AWG 4, 3 Conductor
1660	682-B031		100	Linear Feet	Underground Branch Circuit, Jacked or Bored, AWG 6, 3 Conductor
1670	682-B036		100	Linear Feet	Underground Branch Circuit, Jacked or Bored, AWG 8, 3 Conductor
1680	682-D001		6	Each	Underground Pull Box
1690	682-D003		4	Each	Structure Mounted Pull Box

Line No.	Item Code	Adj Code	Quantity	Units	Description [Fixed Unit Price]
1700	683-B108		146	Each	Lighting Assembly, Low Mast, Type 50-1-0-400
1710	684-A003		205	Cubic Yard	Pole Foundation, 24" Diameter
1720	684-B003		16	Linear Feet	Slip Casing, 24" Diameter
1730	815-A009	(S)	451	Ton	Loose Riprap, Size 300
1740	815-D001	(S)	8	Cubic Yard	Concrete Slope Paving
1750	815-E001	(S)	705	Square Yard	Geotextile under Riprap
1760	907-216-A001		9,317	Square Yard	Solid Sodding
1770	907-225-A001		127	Acre	Grassing
1780	907-225-B001		64	Ton	Agricultural Limestone
1790	907-225-C001		253	Ton	Mulch, Vegetative Mulch
1800	907-226-A001		127	Acre	Temporary Grassing
1810	907-234-D001		44	Each	Inlet Siltation Guard
1820	907-234-E001		5	Each	Reset Inlet Siltation Guard
1830	907-237-A003		4,000	Linear Feet	Wattles, 20"
1840	907-245-A001		1,305	Linear Feet	Triangular Silt Dike
1850	907-246-B002		4,738	Each	Rockbags
1860	907-249-A001		470	Ton	Riprap for Erosion Control
1870	907-251-A001		1	Lump Sum	Maintenance of Existing Erosion Control Devices
1880	907-270-A001		1	Lump Sum	Temporary Site Drainage
1890	907-304-B005	(GT)	124,950	Ton	Granular Material, Class 9, Group C
1900	907-304-B007	(GT)	20,160	Ton	Granular Material, Class 5, Group E
1910	907-304-D003	(GT)	1,769	Ton	Granular Material, Size 57
1920	907-307-C003	(M)	177,271	Square Yard	6" Soil-Lime-Water Mixing, Class C
1930	907-307-D001		2,394	Ton	Lime
1940	907-307-PP001	(M)	354,541	Square Yard	12" Soil-Lime-Water Mixing, Class C
1950	907-307-S001	(A3)	44,319	Gallon	Bituminous Curing Seal
1960	907-402-A004	(BA1)	21,926	Ton	Open Graded Friction Course, 9.5-mm Mixture
1970	907-402-B001	(A3)	39,864	Gallon	Bituminous Tack Coat
1980	907-403-A017	(BA1)	8,577	Ton	9.5-mm, ST, Asphalt Pavement
1990	907-403-A018	(BA1)	5,695	Ton	12.5-mm, ST, Asphalt Pavement
2000	907-403-A019	(BA1)	66,048	Ton	19-mm, ST, Asphalt Pavement
2010	907-403-A027	(BA1)	17,915	Ton	9.5-mm, HT, Asphalt Pavement
2020	907-403-A028	(BA1)	375	Ton	12.5-mm, HT, Asphalt Pavement

Line No.	Item Code	Adj Code	Quantity	Units	Description [Fixed Unit Price]
2030	907-403-A029	(BA1)	152,570	Ton	19-mm, HT, Asphalt Pavement
2040	907-403-AA001	(BA1)	42,078	Ton	Stone Matrix Asphalt, 9.5 mm Mixture
2050	907-403-AA002	(BA1)	34,577	Ton	Stone Matrix Asphalt, 12.5 mm Mixture
2060	907-403-B021	(BA1)	4,100	Ton	12.5-mm, HT, Asphalt Pavement, Leveling
2070	907-403-S004		30	Mile	Joint Sealant
2080	907-406-D001		58,155	Square Yard	Fine Milling of Bituminous Pavement, All Depths
2090	907-407-A001	(A2)	95,368	Gallon	Asphalt for Tack Coat
2100	907-413-E001		706	Linear Feet	Sawing and Sealing Transverse Joints in Asphalt Pavement
2110	907-503-M001		86,500	Square Yard	Repair of Failed Areas in Asphalt and/or Concrete Pavement
2120	907-601-A001	(S)	7	Cubic Yard	Class "B" Structural Concrete
2130	907-601-B003	(S)	274	Cubic Yard	Class "B" Structural Concrete, Minor Structures
2140	907-603-ALT01	(S)	144	Linear Feet	18" Type A Alternate Pipe
2150	907-604-A001	(S)	1,389	Linear Feet	8" Trench Drain
2160	907-605-O001	(S)	12,330	Linear Feet	6" Perforated Sewer Pipe for Underdrains, SDR 23.5
2170	907-605-P001	(S)	900	Linear Feet	6" Non-perforated Sewer Pipe for Underdrains, SDR 23.5
2180	907-606-G001		2,240	Linear Feet	Cable Barrier
2190	907-606-H001		2	Each	Cable Barrier Terminal Section
2200	907-618-1M001		1	Lump Sum	Service Patrol
2210	907-618-A001		1	Lump Sum	Maintenance of Traffic
2220	907-619-E3001		7	Each	Changeable Message Sign
2230	907-619-J3001		13	Each	Remove and Reset Impact Attenuator
2240	907-619-P1001		45,000	Linear Feet	Glare Paddles
2250	907-622-A002		1	Each	Engineer's Field Office Building, Type 3
2260	907-626-A005		32	Mile	6" Thermoplastic Double Drop Traffic Stripe, Skip White
2270	907-626-B005		4,419	Linear Feet	6" Thermoplastic Double Drop Traffic Stripe, Continuous White
2280	907-626-C003		50	Mile	6" Thermoplastic Double Drop Edge Stripe, Continuous White
2290	907-626-D006		9	Mile	6" Thermoplastic Double Drop Traffic Stripe, Skip Yellow
2300	907-626-E006		23	Mile	6" Thermoplastic Double Drop Traffic Stripe, Continuous Yellow
2310	907-626-F003		18	Mile	6" Thermoplastic Double Drop Edge Stripe, Continuous Yellow
2320	907-626-G006		43,095	Linear Feet	Thermoplastic Double Drop Detail Stripe, White
2330	907-626-G007		12,725	Linear Feet	Thermoplastic Double Drop Detail Stripe, Yellow
2340	907-626-H005		144	Square Feet	Thermoplastic Legend, White
2350	907-626-H009		4,973	Linear Feet	Thermoplastic Double Drop Legend, White
2360	907-626-H010		2,203	Square Feet	Thermoplastic Double Drop Legend, White

Line No.	Item Code	Adj Code	Quantity	Units	Description [Fixed Unit Price]
2370	907-626-U004		16	Mile	6" Thermoplastic Traffic Stripe, Skip White, 40-mil min.
2380	907-626-V004		19	Mile	6" Thermoplastic Traffic Stripe, Continuous White, 40-mil min.
2390	907-626-X004		18	Mile	6" Thermoplastic Traffic Stripe, Continuous Yellow, 40-mil min.
2400	907-626-Y002		21,096	Linear Feet	Thermoplastic Detail Traffic Stripe, White, 6" Equivalent Length, 40-mil. min.
2410	907-630-I001		1	Lump Sum	Metal Overhead Sign Supports, Assembly No. 1, Contractor Designed
2420	907-630-I002		1	Lump Sum	Metal Overhead Sign Supports, Assembly No. 2, Contractor Designed
2430	907-630-I003		1	Lump Sum	Metal Overhead Sign Supports, Assembly No. 3, Contractor Designed
2440	907-630-I004		1	Lump Sum	Metal Overhead Sign Supports, Assembly No. 4, Contractor Designed
2450	907-630-I005		1	Lump Sum	Metal Overhead Sign Supports, Assembly No. 5, Contractor Designed
2460	907-630-I006		1	Lump Sum	Metal Overhead Sign Supports, Assembly No. 6, Contractor Designed
2470	907-630-I007		1	Lump Sum	Metal Overhead Sign Supports, Assembly No. 7, Contractor Designed
2480	907-630-I008		1	Lump Sum	Metal Overhead Sign Supports, Assembly No. 8, Contractor Designed
2490	907-630-I009		1	Lump Sum	Metal Overhead Sign Supports, Assembly No. 9, Contractor Designed
2500	907-630-I010		1	Lump Sum	Metal Overhead Sign Supports, Assembly No. 10, Contractor Designed
2510	907-630-I012		1	Lump Sum	Metal Overhead Sign Supports, Assembly No. 11, Contractor Designed
2520	907-630-I013		1	Lump Sum	Metal Overhead Sign Supports, Assembly No. 12, Contractor Designed
2530	907-630-I014		1	Lump Sum	Metal Overhead Sign Supports, Assembly No. 13, Contractor Designed
2540	907-630-I015		1	Lump Sum	Metal Overhead Sign Supports, Assembly No. 14, Contractor Designed
2550	907-630-I016		1	Lump Sum	Metal Overhead Sign Supports, Assembly No. 15, Contractor Designed
2560	907-630-I017		1	Lump Sum	Metal Overhead Sign Supports, Assembly No. 16, Contractor Designed
2570	907-630-I018		1	Lump Sum	Metal Overhead Sign Supports, Assembly No. 17, Contractor Designed
2580	907-630-I019		1	Lump Sum	Metal Overhead Sign Supports, Assembly No. 18, Contractor Designed
2590	907-630-I020		1	Lump Sum	Metal Overhead Sign Supports, Assembly No. 19, Contractor Designed
2600	907-630-I021		1	Lump Sum	Metal Overhead Sign Supports, Assembly No. 20, Contractor Designed
2610	907-630-I022		1	Lump Sum	Metal Overhead Sign Supports, Assembly No. 21, Contractor Designed
2620	907-630-I023		1	Lump Sum	Metal Overhead Sign Supports, Assembly No. 22, Contractor Designed
2630	907-631-A001		1,350	Cubic Yard	Flowable Fill, Excavatable
2640	907-631-B001		95	Cubic Yard	Flowable Fill, Non-Excavatable
2650	907-637-A001		8	Each	Equipment Cabinet, Type B
2660	907-639-A002		2	Each	Traffic Signal Equipment Pole, Type II, 17' Shaft, 50' Arm
2670	907-639-A006		1	Each	Traffic Signal Equipment Pole, Type II, 17' Shaft, 30' Arm
2680	907-639-A007		1	Each	Traffic Signal Equipment Pole, Type II, 17' Shaft, 40' Arm
2690	907-639-A009		1	Each	Traffic Signal Equipment Pole, Type II, 17' Shaft, 60' Arm

Line No.	Item Code	Adj Code	Quantity	Units	Description [Fixed Unit Price]
2700	907-639-A115		1	Each	Traffic Signal Equipment Pole, Type III, 17' Shaft, 45' & 45' Arms
2710	907-639-C002		3	Cubic Yard	Pole Foundations, 36" Diameter
2720	907-639-C004		9	Cubic Yard	Pole Foundations, 30" Diameter
2730	907-639-E001		3	Each	Camera Pole with Foundation, 50' Pole
2740	907-639-F001		4	Each	Detector Pole with Foundation, 35' Pole
2750	907-642-A003		2	Each	Solid State Traffic Actuated Controllers, Type 8A
2758	907-644-A001		5	Each	Optical Detector
2760	907-644-B001		1,110	Linear Feet	Optical Detector Cable
2762	907-644-C002		4	Each	Phase Selector, 4 Channel
2770	907-649-A004		3	Each	Video Detection System, 1 Sensor, Type 2
2780	907-649-D002		3	Each	Multi-Sensor Detection System, 1 Sensor
2790	907-650-A003		14	Each	On Street Video Equipment, PTZ Type
2800	907-656-A001		2	Each	Dynamic Message Sign, Type 1
2810	907-656-B001		1	Lump Sum	Dynamic Message Sign Training
2820	907-657-A001		39,675	Linear Feet	Fiber Optic Cable, 72 SM
2830	907-657-B001		4,185	Linear Feet	Fiber Optic Drop Cable, 12 SM
2840	907-658-A005		21	Each	Network Switch, Type A
2850	907-658-A007		1	Each	Network Switch, Type C
2860	907-659-A001		1	Lump Sum	Traffic Management Center Modifications
2870	907-659-C001		1	Lump Sum	Traffic Management Center Modifications - Training
2880	907-660-A001		1	Each	OTN Node
2890	907-660-C001		1	Lump Sum	OTN Node Training
2900	907-660-PP001		1	Lump Sum	Communications Hut Modification, Per Plans
2910	907-668-E002		150	Linear Feet	Traffic Signal Conduit Bank, Underground, Rolled Pipe, 2 @ 2"
2920	907-670-A001		8	Each	ITS Radar Detection System
2930	907-681-A1002		19	Each	Wire Testing
2940	907-681-B1001		121	Each	Conduit Testing
2950	907-682-A1001		100	Linear Feet	Branch Circuit Wire, AWG #1, 3 Conductor
2960	907-682-A1002		1,950	Linear Feet	Branch Circuit Wire, AWG #1/0, 3 Conductor
2970	907-682-A1004		2,420	Linear Feet	Branch Circuit Wire, AWG #2, 3 Conductor
2980	907-682-A1007		1,200	Linear Feet	Branch Circuit Wire, AWG #4, 3 Conductor
2990	907-682-A1011		670	Linear Feet	Branch Circuit Wire, AWG #6, 3 Conductor
3000	907-682-A1013		660	Linear Feet	Branch Circuit Wire, AWG #8, 3 Conductor
3010	907-682-A1031		100	Linear Feet	Branch Circuit Wire, AWG #2/0, 3 Conductor

Line No.	Item Code	Adj Code	Quantity	Units	Description [Fixed Unit Price]
3020	907-687-A018		1	Each	Traffic Recorder Classification Permanent System
3030	907-699-A002		1	Lump Sum	Roadway Construction Stakes
3040	907-906001		2,080	Hours	Trainees [$5.00]
			ALTERNATE GROUP AA NUMBER 1		
3050	907-304-F002	(GT)	116,588	Ton	Size 610 Crushed Stone Base
			ALTERNATE GROUP AA NUMBER 2		
3060	907-304-F003	(GT)	116,588	Ton	3/4" and Down Crushed Stone Base
			ALTERNATE GROUP AA NUMBER 3		
3070	907-304-F004	(GT)	116,588	Ton	Size 825B Crushed Stone Base
			ALTERNATE GROUP BB NUMBER 1		
3080	907-308-A001		1,596	Ton	Portland Cement
3090	907-308-B002	(M)	177,271	Square Yard	Soil-Cement-Water Mixing, Optional Mixers, Design Soil
3100	907-308-S001	(A3)	44,319	Gallon	Bituminous Curing Seal
			ALTERNATE GROUP BB NUMBER 2		
3110	907-311-A003	(M)	177,271	Square Yard	Processing Lime and Fly Ash Treated Course, 6" Thick
3120	907-311-B001		1,197	Ton	Lime
3130	907-311-C001		4,787	Ton	Fly Ash, Class C
3140	907-311-S001	(A3)	44,319	Gallon	Bituminous Curing Seal
			ALTERNATE GROUP CC NUMBER 1		
3150	907-308-A001		4,388	Ton	Portland Cement
3160	907-308-B001	(M)	354,541	Square Yard	Soil-Cement-Water Mixing, Optional Mixers, Base
3170	907-308-S001	(A3)	88,636	Gallon	Bituminous Curing Seal
			ALTERNATE GROUP CC NUMBER 2		
3180	907-311-A003	(M)	354,541	Square Yard	Processing Lime and Fly Ash Treated Course, 6" Thick
3190	907-311-B001		2,394	Ton	Lime
3200	907-311-C001		9,573	Ton	Fly Ash, Class C
3210	907-311-S001	(A3)	88,636	Gallon	Bituminous Curing Seal
			Bridge Items		
3220	206-A001	(S)	1,038	Cubic Yard	Structure Excavation
3230	802-A001	(S)	5,000	Square Feet	Permanent Steel Sheet Piling
3240	803-C002	(S)	23,540	Linear Feet	14" x 14" Prestressed Concrete Piling
3250	803-D007	(S)	11,460	Linear Feet	HP 14 x 89 Steel Piling
3260	803-I001	(S)	3	Each	PDA Test Pile
3270	805-A001	(S)	427,669	Pounds	Reinforcement
3280	813-E009	(S)	343	Linear Feet	42" Concrete Bridge Median Barrier Railing

Line No.	Item Code	Adj Code	Quantity	Units	Description [Fixed Unit Price]
3290	907-804-A014	(S)	5,772	Cubic Yard	Bridge Concrete, Class B
3300	907-823-A002		287	Linear Feet	Preformed Joint Seal, Type II
3310	907-824-PP097		80	Linear Feet	Bridge Repair, End Wall Repair, Per Plans
3320	907-824-PP098		160	Square Feet	Bridge Repair, Remove & Replace Bridge Deck, Per Plans
3330	907-825-A001	(S)	1,252	Square Feet	Soil Nail Retaining Walls
3340	907-825-B001	(S)	5	Each	Soil Nail Verification Tests

ADDENDUM

FMS CON:106023-309000

STATE	PROJECT NO.
MISS.	IM-0055-02(246)

DESCRIPTION OF SHEET	WKG. NO.	SH. NO.
TITLE SHEET (1)		1
DETAILED INDEX & GENERAL NOTES (7)		
DETAILED INDEX	DI-1	2
DETAILED INDEX	DI-2	3
DETAILED INDEX	DI-3	4
DETAILED INDEX	DI-4	5
DETAILED INDEX	DI-5	6
GENERAL NOTES	GN-1	7
GENERAL NOTES	GN-2	8
TYPICAL SECTION SHEETS (21)		
TYPICAL SECTIONS - I-55	TS-1	9
TYPICAL SECTIONS - I-55	TS-2	10
TYPICAL SECTIONS - I-55	TS-3	11
TYPICAL SECTIONS - I-55	TS-4	12
TYPICAL SECTIONS - INLET PLACEMENT AT SHOULDER BARRIER, BARRIER WALLS	TS-5	13
TYPICAL SECTIONS - INTERCHANGE RAMPS	TS-6	14
TYPICAL SECTIONS - INTERCHANGE RAMPS	TS-7	15
TYPICAL SECTIONS - NEW CONSTRUCTION WEST FRONTAGE ROAD & FAILED AREAS	TS-8	16
TYPICAL SECTIONS - SHOULDER BARRIER WALL DETAILS	TS-9	17
TYPICAL SECTIONS - MISCELLANEOUS	TS-10	18
TYPICAL SECTION - PAVEMENT DEPTH @ BRIDGE ENDS & SLOPE PAVING	TS-11	19
TYPICAL SECTION - MEDIAN BARRIER DETAILS	TS-12	20
TYPICAL SECTIONS - CMB TRANSITION @ BRIDGE PIERS	TS-13	21
TYPICAL SECTIONS - CMB TRANSITION @ OVERHEAD SIGN SUPPORTS	TS-14	22
TYPICAL SECTIONS - CMB @ LIGHTING POLES & POLE FOUNDATION DETAILS	TS-15	23
TYPICAL SECTIONS - INLET PLACEMENT @ MEDIAN BARRIER WALLS & TRENCH DRAIN DETAILS	TS-16	24
TYPICAL SECTIONS - I-55 HORIZ BRIDGE CLR.	TS-17	25
TYPICAL SECTIONS - I-55 HORIZ BRIDGE CLR.	TS-18	26
TYPICAL SECTIONS - VARIABLE WIDENING AT EXIT & ENTRANCE RAMPS	TS-19	27
TYPICAL SECTIONS - I-55 NB CROSSOVER REMOVAL & MEDIAN RECONSTRUCTION PHASE 3	TS-20	28
TYPICAL SECTIONS - I-55 MEDIAN CONSTRUCTION PHASE 2 & 3	TS-21	29
QUANTITY SHEETS (38)		
SUMMARY OF QUANTITIES	SQ-1	30
SUMMARY OF QUANTITIES	SQ-2	31
SUMMARY OF QUANTITIES	SQ-3	32
SUMMARY OF QUANTITIES	SQ-4	33
SUMMARY OF QUANTITIES	SQ-5	34
SUMMARY OF QUANTITIES	SQ-6	35
SUMMARY OF QUANTITIES	SQ-7	36
SUMMARY OF QUANTITIES	SQ-8	37
SUMMARY OF QUANTITIES	SQ-9	38
ESTIMATED QUANTITIES - DRAINAGE STRUCTURES, MEDIAN	EQ-1	39
ESTIMATED QUANTITIES - DRAINAGE STRUCTURES, MEDIAN	EQ-2	40
ESTIMATED QUANTITIES - DRAINAGE STRUCTURES, LEFT	EQ-3	41
ESTIMATED QUANTITIES - DRAINAGE STRUCTURES, LEFT	EQ-4	42
ESTIMATED QUANTITIES - DRAINAGE STRUCTURES, LEFT AND JOB TOTALS	EQ-5	43
ESTIMATED QUANTITIES - JUNCTION BOX, CURB & GUTTER, BRANCH CONNECTION	EQ-6	44
ESTIMATED QUANTITIES - BOX CULVERT WINGWALL REPAIR, BRIDGE END PAVEMENT, EARTHWORK	EQ-7	45
ESTIMATED QUANTITIES - GUARDRAIL	EQ-8	46
ESTIMATED QUANTITIES - EROSION CONTROL, UNDERDRAINS	EQ-9	47
ESTIMATED QUANTITIES - SHOULDER & MEDIAN BARRIER, DRIVEWAYS, SIDE DRAINS	EQ-10	48
ESTIMATED QUANTITIES - STANDARD ROADSIDE SIGNS	EQ-11	49
ESTIMATED QUANTITIES - STANDARD ROADSIDE SIGN ASSEMBLIES	EQ-12	50
ESTIMATED QUANTITIES - DIRECTIONAL SIGN ASSEMBLIES	EQ-13	51
ESTIMATED QUANTITIES - TRAFFIC CONTROL SIGNS	EQ-14	52
ESTIMATED QUANTITIES - TRAFFIC CONTROL ITEMS	EQ-15	53
ESTIMATED QUANTITIES - TRAFFIC CONTROL ITEMS	EQ-15A	54
ESTIMATED QUANTITIES - TRAFFIC CONTROL ITEMS	EQ-15B	55
ESTIMATED QUANTITIES - TRAFFIC CONTROL ITEMS	EQ-15C	56
ESTIMATED QUANTITIES - PAVEMENT MARKINGS	EQ-16	57

DESCRIPTION OF SHEET	WKG. NO.	SH. NO.
QUANTITY SHEETS (CONTINUED)		
ESTIMATED QUANTITIES - REMOVAL ITEMS	EQ-17	58
ESTIMATED QUANTITIES - TRAFFIC SIGNAL	EQ-18	59
ESTIMATED QUANTITIES - ITS ITEMS	EQ-19	60
ESTIMATED QUANTITIES - ITS EQUIPMENT POWER	EQ-20	61
ESTIMATED QUANTITIES - TESTING	EQ-21	62
ESTIMATED QUANTITIES - LIGHTING	EQ-22	63
ESTIMATED QUANTITIES - LIGHTING	EQ-23	64
ESTIMATED QUANTITIES - LIGHTING	EQ-24	65
ESTIMATED QUANTITIES - LIGHTING	EQ-25	66
ESTIMATED QUANTITIES - LIGHTING	EQ-26	67
PLAN & PROFILE SHEETS (50)		
I-55 - B.O.P. TO STA. 585+00 LT	3LT	68
I-55 - B.O.P. TO STA. 585+00 RT	3RT	69
I-55 PROFILE - B.O.P. TO STA. 585+00 LT	3aLT	70
I-55 PROFILE - B.O.P. TO STA. 585+00 RT	3aRT	71
I-55/SIWELL RD. - STA. 585+00 TO STA. 615+00 LT	4LT	72
I-55/SIWELL RD. - STA. 585+00 TO STA. 615+00 RT	4RT	73
I-55/SIWELL RD. PROFILE - STA. 585+00 TO STA. 615+00 LT	4aLT	74
I-55/SIWELL RD. PROFILE - STA. 585+00 TO STA. 615+00 RT	4aRT	75
I-55/SIWELL RD. - RAMPS & LOOP PROFILES	4B	76
I-55 - STA. 615+00 TO STA. 645+00 LT	5LT	77
I-55 - STA. 615+00 TO STA. 645+00 RT	5RT	78
I-55 - STA. 645+00 TO STA. 672+00 LT	6LT	79
I-55 - STA. 645+00 TO STA. 672+00 RT	6RT	80
I-55 - STA. 672+00 TO STA. 700+00 LT	7LT	81
I-55 - STA. 672+00 TO STA. 700+00 RT	7RT	82
I-55 - STA. 700+00 TO STA. 728+00 LT	8LT	83
I-55 - STA. 700+00 TO STA. 728+00 RT	8RT	84
I-55 - STA. 728+00 TO STA. 756+00 LT	9LT	85
I-55 - STA. 728+00 TO STA. 756+00 RT	9RT	86
I-55/ELTON RD. - STA. 756+00 TO STA. 783+00 LT	10LT	87
I-55/ELTON RD. - STA. 756+00 TO STA. 783+00 RT	10RT	88
I-55/ELTON RD. PROFILE - STA. 756+00 TO STA. 783+00 LT	10aLT	89
I-55/ELTON RD. PROFILE - STA. 756+00 TO STA. 783+00 RT	10aRT	90
I-55/ELTON RD. PROFILE	10B	91
I-55/ELTON RD. - RAMP PROFILES	10C	92
FRONTAGE ROAD NORTH & WEST OF ELTON ROAD	10D	93
I-55 - STA. 783+00 TO STA. 813+00 LT	11LT	94
I-55 - STA. 783+00 TO STA. 813+00 RT	11RT	95
I-55 - STA. 813+00 TO STA. 843+00 LT	12LT	96
I-55 - STA. 813+00 TO STA. 843+00 RT	12RT	97
I-55/SAVANNA ST. - STA. 843+00 TO STA. 873+00 LT	13LT	98
I-55/SAVANNA ST. - STA. 843+00 TO STA. 873+00 RT	13RT	99
I-55/SAVANNA ST. PROFILE - STA. 843+00 TO STA. 873+00 LT	13aLT	100
I-55/SAVANNA ST. PROFILE - STA. 843+00 TO STA. 873+00 RT	13aRT	101
I-55/SAVANNA ST. - SAVANNA ST. & E. FRONTAGE RD. @ SAVANNA ST. PROFILES	13B	102
I-55/SAVANNA ST. - RAMP PROFILES	13C	103
I-55/DANIEL LAKE BLVD. - STA. 873+00 TO STA. 902+00 LT	14LT	104
I-55/DANIEL LAKE BLVD. - STA. 873+00 TO STA. 902+00 RT	14RT	105
I-55 PROFILE - STA. 873+00 TO STA. 902+00 LT	14aLT	106
I-55 PROFILE - STA. 873+00 TO STA. 902+00 RT	14aRT	107
I-55/DANEIL LAKE BLVD. - RAMP PROFILES	14B	108

NEEL-SCHAFFER

PS & E PLANS-DATE: 1-8-2016		
FMS CON. # 106023/309000		
REVISIONS		
DATE	SHEET NO.	BY
02/22/16	9,11,31,35,36,44,155	RKE
03-11-16	10,11,16,30,32,36,39, 43,59,2002	DMM
03-15-16	24	RKE

RAYMOND KYLE EDSON LICENSED PROFESSIONAL ENGINEER 15139 STATE OF MISSISSIPPI

3-15-16

MISSISSIPPI DEPARTMENT OF TRANSPORTATION

DETAILED INDEX

COUNTY: HINDS

PROJ. NO.: IM-0055-02(246)

WORKING NUMBER DI-1

SHEET NUMBER 2

FILENAME: DI.DGN

DESIGN TEAMNEEL-SCHAFFERCHECKED_____DATE_____

BY | REVISION | DATE

PLAN
ROADWAY DESIGN DIVISION
MISSISSIPPI DEPARTMENT OF TRANSPORTATION

3/15/2016 11:34AM DI.DGN

ADDENDUM

FMS CON:106023/309000

STATE	PROJECT NO.
MISS.	IM–0055–02(246)

DATA FOR PAVEMENT DETERMINATION			
2012 ADT	=	71,000	Current
2022 ADT	=	83,000	
2032 ADT	=	96,000	Design
2032 DHV	=	9,600	
D	=	55%	% of DHV
T	=	17%	% of DHV
T (total)	=		% of ADT
18K (Rigid)	=	110,852	/ 1000
18K (Flex)	=	71,810	/ 1000
Design CBR	=		

I– 55 TRAVEL LANES & SHOULDERS

(1) 1.00" OGFC (9.5 mm MIX) REQ'D.
(2) 1.50" 9.5–mm, SMA, ASPHALT PAVEMENT (1 @ 1.50") REQ'D.
(3) 2.00" 12.5–mm, SMA, ASPHALT PAVEMENT (1 @ 2.00") REQ'D.
✳✳ (4) 2.25" OR 3.25" 19.0–mm, HT, ASPHALT PAVEMENT (1 @ 2.25 OR 1 @ 3.25") REQ'D.
(5) 3.00" 19.0–mm, HT, ASPHALT PAVEMENT (1 @ 3.00") REQ'D.
(6) 3.00" 19.0–mm, ST, ASPHALT PAVEMENT (1 @ 3.00") REQ'D.
✳✳✳ (7) 6.00" CHEMICALLY TREATED GRANULAR MAT'L. CL 9C
✳✳✳✳ (8) 6.00" CHEMICALLY TREATED SUBGRADE (OUTSIDE SHL'D EDGE TO OUTSIDE SHL'D EDGE)
(9) 1.50" 9.5–mm, ST, ASPHALT PAVEMENT (1 @ 1.50") REQ'D.
(10) 2.00" 12.5–mm, ST, ASPHALT PAVEMENT (1 @ 2.00") REQ'D.
✳✳ (11) 2.25" OR 3.25" 19.0–mm, ST, ASPHALT PAVEMENT (1 @ 2.25 OR 1 @ 3.25") REQ'D.
(12) 6.00" & VAR. UN–TREATED GRANULAR MAT'L (CL 9, GR C)
(13) RUMBLE STRIPS, GROUND–IN. (SEE WK. NO. RS–1)
(14) VARIABLE DEPTH UN–TREATED GRANULAR MAT'L (CL 5, GR E)
✳✳✳✳✳ (15) 12" QUICKLIME TREATMENT REQ'D
(16) 12.00" & VAR. BORROW (CL B9–6) REQ'D.

INDICATES AREAS TO BE PLATED W /4" TOPSOIL & TREATED IN ACCORDANCE WITH THE VEGETATION SCHEDULE. (SEE WK. SH. VS–1).

(X) VARIES, SEE X–SECTIONS

✳✳ 2.25" FROM THE BOP TO 750+00
3.25" FROM 750+00 TO THE EOP.

✳✳✳ PLANS WILL ALLOW SOIL CEMENT (5.5% CEMENT) OR LIME FLY ASH (3% LIME, 12% FLY ASH) TREATMENT OF THE BASE. CHEMICAL TREATMENT SHALL EXTEND 2 FEET OUTSIDE THE EDGE OF PAVEMENT.

✳✳✳✳ 6.00" CHEMICALLY TREATED SUBGRADE (ESTIMATED FOR SOIL CEMENT TREATMENT (4% CEMENT) OR LIME FLY ASH TREATMENT (3% LIME, 12% FLY ASH) OF 50% OF THE SUBGRADE AND LIME TREATMENT (6%) OF THE REMAINING 50% OF THE SUBGRADE. NOTE THIS IS FOR PLAN QUANTITY ESTIMATE ONLY. A SELECTION OF ACTUAL TREATMENT WILL BE MADE DURING CONSTRUCTION. CHEMICAL TREATMENT SHALL EXTEND FROM OUTSIDE SHOULDER EDGE TO OUTSIDE SHOULDER EDGE.

✳✳✳✳✳ 12.00" CHEMICALLY TREATED UNDERCUT SUBGRADE WITH 5% QUICKLIME INCORPORATED ON 100% OF THE UNDERCUT SUBGRADE. FINISHING TO THE LINE AND GRADES AS SHOWN IN THE PLANS WILL BE REQUIRED. A SPECIFIC RELATIVE DENSITY WILL NOT BE REQUIRED. COMPACTION WILL BE REQUIRED TO BE COMPLETED TO THE SATISFACTION OF THE ENGINEER. CURING THE TREATED UNDERCUT SUBGRADE WILL NOT BE REQUIRED. ALL MATERIALS, EQUIPMENT AND COST ASSOCIATED WITH CONSTRUCTING THE 12.00" CHEMICALLY TREATED UNDERCUT SUBGRADE WILL BE COST ABSORBED IN PAY ITEM 907–307–PP001 12" SOIL LIME WATER MIXING, CLASS C, UNDERCUT.

(A) 3' OF UNDERCUT BACKFILLED W /B9–6 BORROW EXCAVATION MATERIAL TO BOTTOM OF SUBGRADE ALL CUT REQURIED WILL BE EXCESS

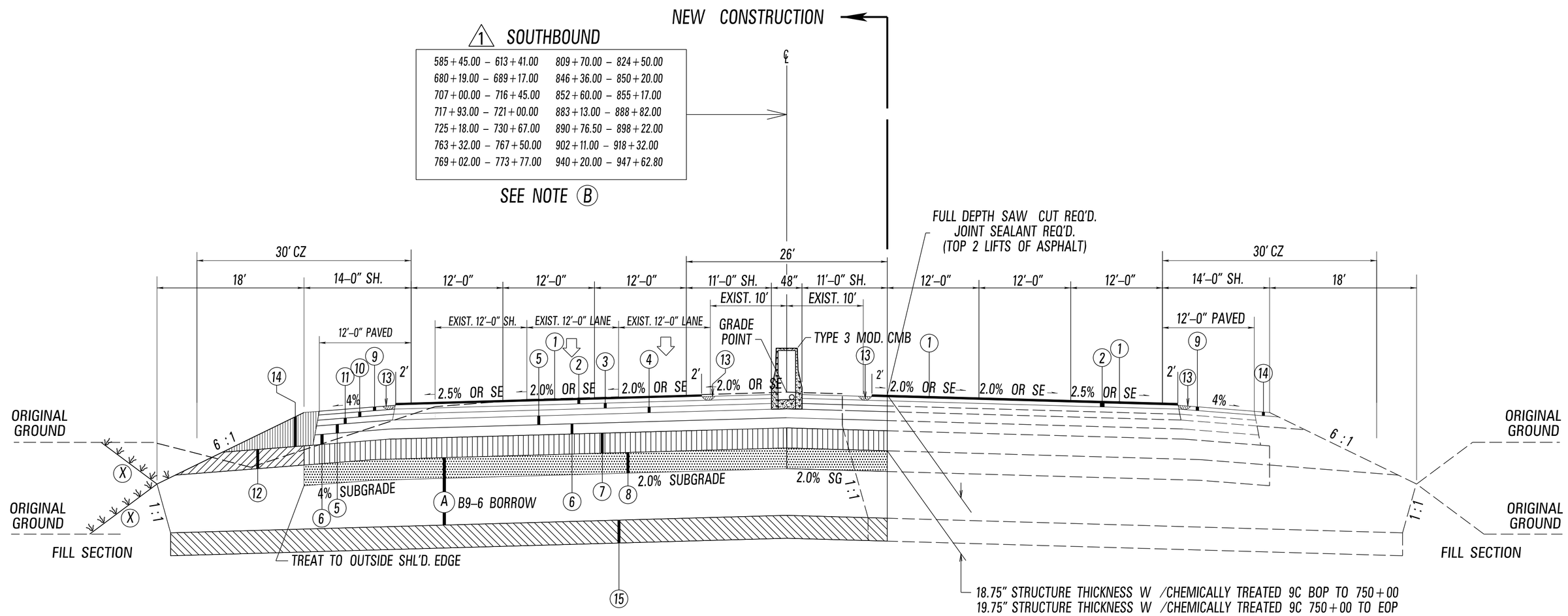

I-55 WIDENING
6 LANE SECTION
SECTIONS WITH RETAINING WALLS SEE WK. NO. TS-3

1 B

1. SEE ELSE WHERE IN PLANS FOR ACCELERATION AND DECELERATION LANES REQUIRED.
2. OPEN SHOULDER ACCELERATION AND DECELERATION LANES REQUIRE A 10' SHOULDER WITH 8' PAVED.
3. SHOULDER WITH BARRIER AT ACCELERATION AND DECELERATION LANES REQUIRE A 10' SHOULDER PAVED TO FACE OF BARRIER.
4. ALL PAVEMENT DEPTHS & SLOPES AS SHOWN IN TYPICAL WILL BE REQUIRED AT ACCELERATION & DECELERATION LANES.

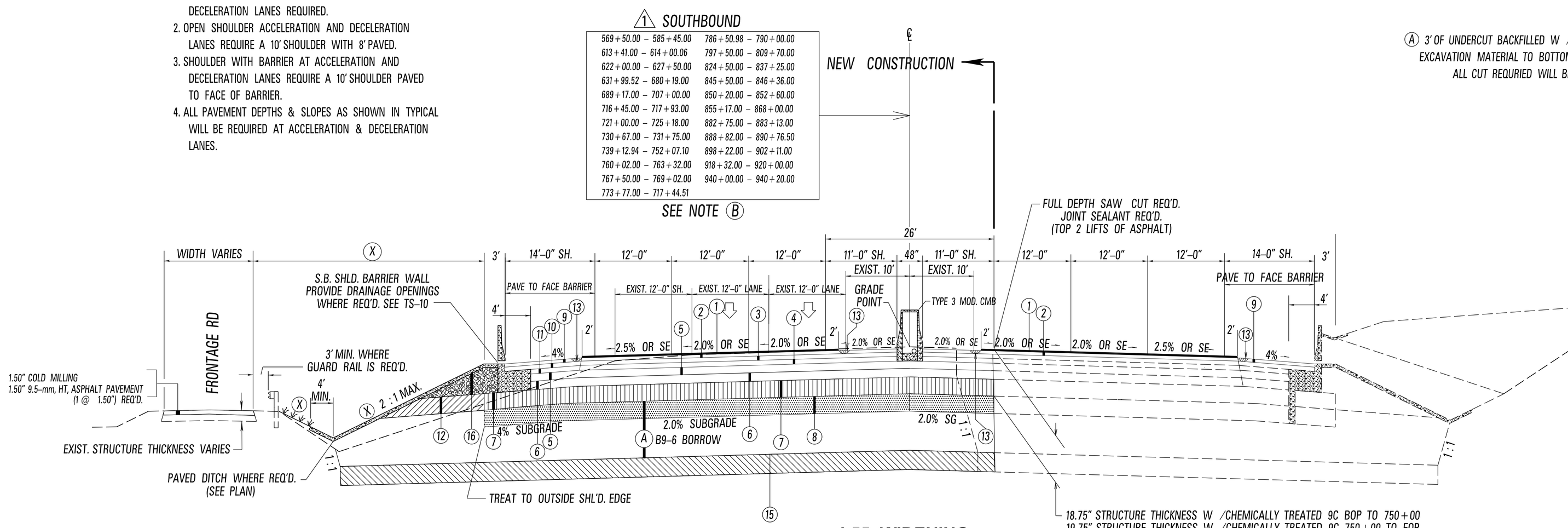

I-55 WIDENING
6 LANE SECTION
(NEW MEDIAN BARRIER w/ SHOULDER BARRIER WALLS)
SECTIONS WITH RETAINING WALLS SEE WK. NO. TS-3

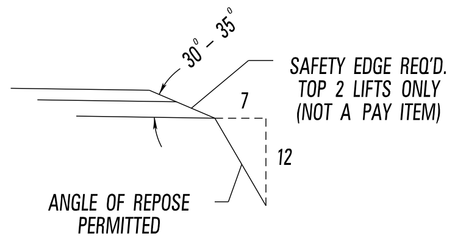

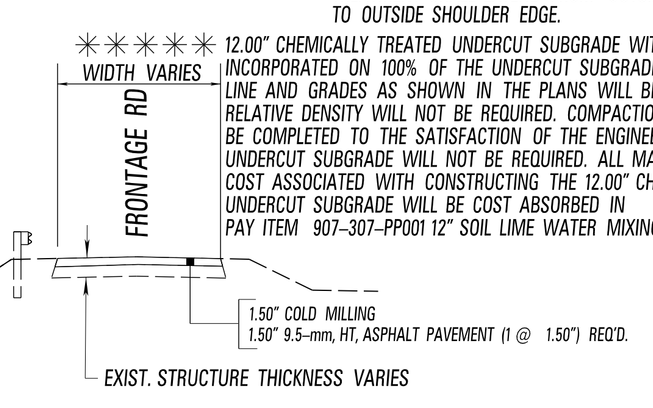

NOT TO SCALE

DATE	REVISION	BY
3/11/16	ADDED STATIONS & NOTE B	DMM

MISSISSIPPI DEPARTMENT OF TRANSPORTATION

TYPICAL SECTIONS

I - 55

PROJECT NO. IM–0055–02(246)
HINDS COUNTY

FILENAME: TYPICALS.DGN
DESIGN TEAM NEEL–SCHAFFER CHECKED ____ DATE ____

WORKING NUMBER TS–2

SHEET NUMBER 10

PLAN
ROADWAY DESIGN DIVISION
MISSISSIPPI DEPARTMENT OF TRANSPORTATION

3/9/2016 10:17AM TYPICALS.DGN

ADDENDUM

FMS CON:106023/309000

STATE	PROJECT NO.
MISS.	IM–0055–02(246)

DATA FOR PAVEMENT DETERMINATION			
2012 ADT =	71,000		Current
2022 ADT =	83,000		
2032 ADT =	96,000		Design
2032 DHV =	9,600		
D =	55%	%	of DHV
T =	17%	%	of DHV
T (total) =		%	of ADT
18K (Rigid) =	110,852	/	1000
18K (Flex) =	71,810	/	1000
Design CBR =			

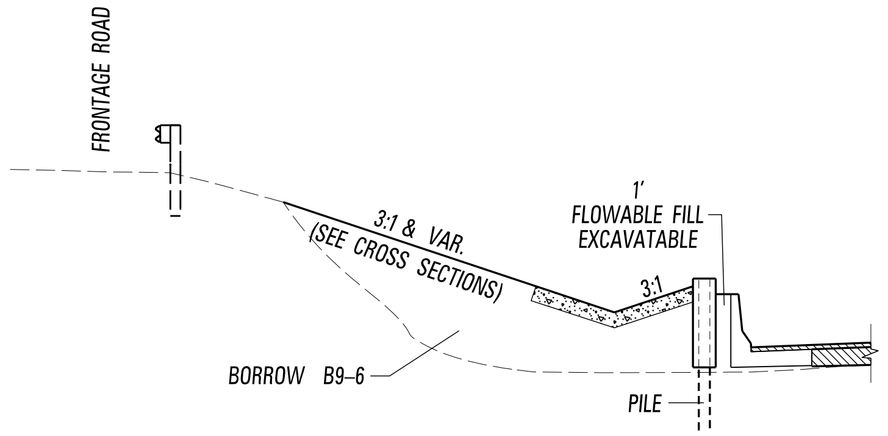

DETAIL "A"

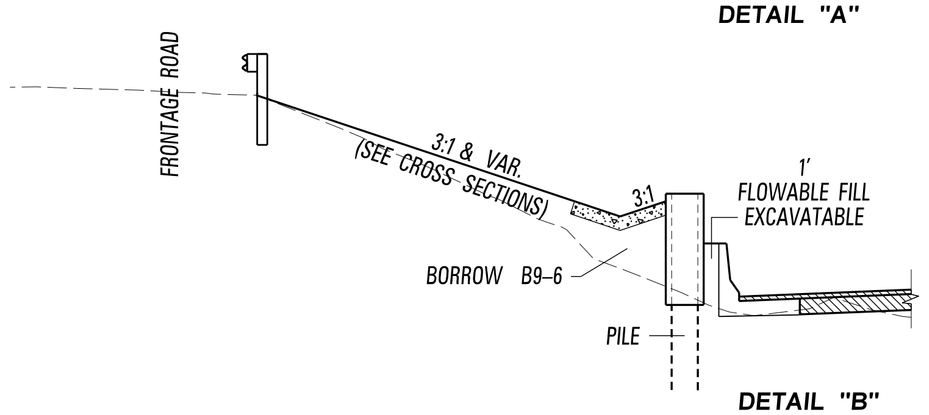

DETAIL "B"

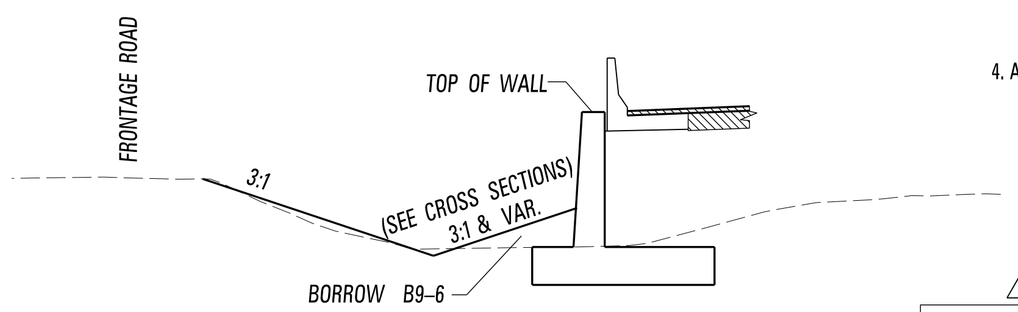

DETAIL "C"

NOTE:

FOR DETAIL REQUIREMENTS SEE ELSEWHRERE IN PLANS

JOINTS TO BE COVERED SO FLOWABLE FILL DOES NOT IMPEDE JOINT (COST ABSORBED IN OTHER BID ITEMS)

2 (B)

1. SEE ELSE WHERE IN PLANS FOR ACCELERATION AND DECELERATION LANES REQUIRED.
2. OPEN SHOULDER ACCELERATION AND DECELERATION LANES REQUIRE A 10' SHOULDER WITH 8' PAVED.
3. SHOULDER WITH BARRIER AT ACCELERATION AND DECELERATION LANES REQUIRE A 10' SHOULDER PAVED TO FACE OF BARRIER.
4. ALL PAVEMENT DEPTHS & SLOPES AS SHOWN IN TYPICAL WILL BE REQUIRED AT ACCELERATION & DECELERATION LANES.

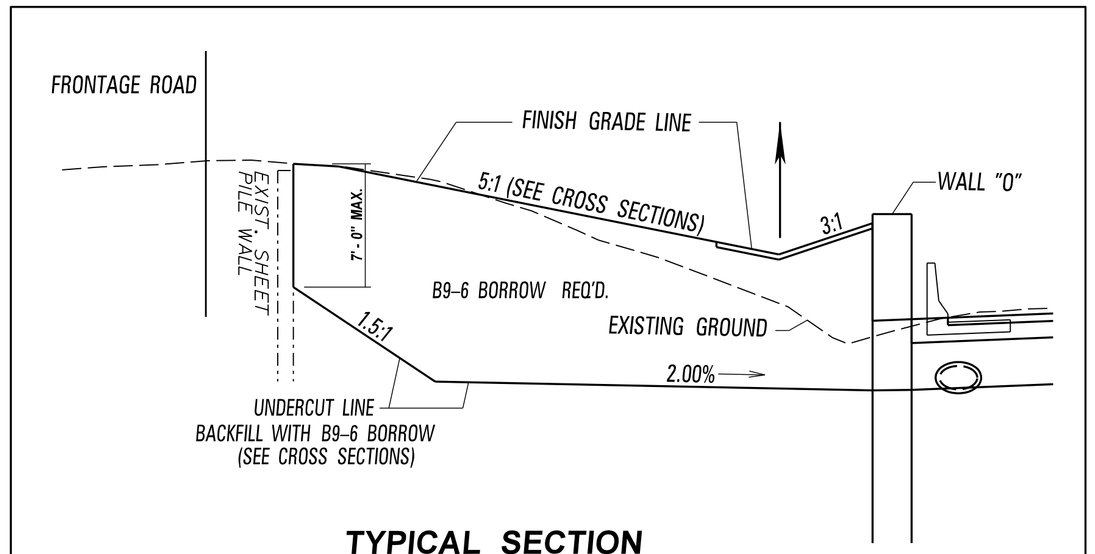

TYPICAL SECTION
SLIDE AREAS LEFT SIDE
STA. 880+10 - STA. 882+00

I– 55 TRAVEL LANES & SHOULDERS

(1) 1.00" OGFC (9.5 mm MIX) REQ'D.
(2) 1.50" 9.5–mm, SMA, ASPHALT PAVEMENT (1 @ 1.50") REQ'D.
(3) 2.00" 12.5–mm, SMA, ASPHALT PAVEMENT (1 @ 2.00") REQ'D.
✳✳ (4) 2.25" OR 3.25" 19.0–mm, HT, ASPHALT PAVEMENT (1 @ 2.25 OR 1 @ 3.25") REQ'D.
(5) 3.00" 19.0–mm, HT, ASPHALT PAVEMENT (1 @ 3.00") REQ'D.
(6) 3.00" 19.0–mm, ST, ASPHALT PAVEMENT (1 @ 3.00") REQ'D.
✳✳✳ (7) 6.00" CHEMICALLY TREATED GRANULAR MAT'L. CL 9C
✳✳✳✳ (8) 6.00" CHEMICALLY TREATED SUBGRADE (OUTSIDE SHL'D EDGE TO OUTSIDE SHL'D EDGE)
(9) 1.50" 9.5–mm, ST, ASPHALT PAVEMENT (1 @ 1.50") REQ'D.
(10) 2.00" 12.5–mm, ST, ASPHALT PAVEMENT (1 @ 2.00") REQ'D.
1 ✳✳ (11) 2.25" OR 3.25" 19.0–mm, ST, ASPHALT PAVEMENT (1 @ 2.25 OR 1 @ 3.25") REQ'D.
✳ (12) RUMBLE STRIPS, GROUND–IN. (SEE WK. NO. RS–1)
✳✳✳✳✳ (13) 12" QUICKLIME TREATMENT REQ'D

✳✳✳✳ INDICATES AREAS TO BE PLATED W /4" TOPSOIL & TREATED IN ACCORDANCE WITH THE VEGETATION SCHEDULE. (SEE WK. SH. VS–1).

(X) VARIES, SEE X–SECTIONS

✳✳ 2.25" FROM THE BOP TO 750+00
3.25" FROM 750+00 TO THE EOP.

✳✳✳ PLANS WILL ALLOW SOIL CEMENT (5.5% CEMENT) OR LIME FLY ASH (3% LIME, 12% FLY ASH) TREATMENT OF THE BASE. CHEMICAL TREATMENT SHALL EXTEND 2 FEET OUTSIDE THE EDGE OF PAVEMENT.

✳✳✳✳ 6.00" CHEMICALLY TREATED SUBGRADE (ESTIMATED FOR SOIL CEMENT TREATMENT (4% CEMENT) OR LIME FLY ASH TREATMENT (3% LIME, 12% FLY ASH) OF 50% OF THE SUBGRADE AND LIME TREATMENT (6%) OF THE REMAINING 50% OF THE SUBGRADE. NOTE THIS IS FOR PLAN QUANTITY ESTIMATE ONLY. A SELECTION OF ACTUAL TREATMENT WILL BE MADE DURING CONSTRUCTION. CHEMICAL TREATMENT SHALL EXTEND FROM OUTSIDE SHOULDER EDGE TO OUTSIDE SHOULDER EDGE.

✳✳✳✳ 12.00" CHEMICALLY TREATED UNDERCUT SUBGRADE WITH 5% QUICKLIME INCORPORATED ON 100% OF THE UNDERCUT SUBGRADE. FINISHING TO THE LINE AND GRADES AS SHOWN IN THE PLANS WILL BE REQUIRED. A SPECIFIC RELATIVE DENSITY WILL NOT BE REQUIRED. COMPACTION WILL BE REQUIRED TO BE COMPLETED TO THE SATISFACTION OF THE ENGINEER. CURING THE TREATED UNDERCUT SUBGRADE WILL NOT BE REQUIRED. ALL MATERIALS, EQUIPMENT AND COST ASSOCIATED WITH CONSTRUCTING THE 12.00" CHEMICALLY TREATED UNDERCUT SUBGRADE WILL BE COST ABSORBED IN PAY ITEM 907–307–PP001 12" SOIL LIME WATER MIXING, CLASS C, UNDERCUT.

2 SOUTHBOUND

566+50.00 – 569+50.00	717+44.51 – 786+50.98
614+00.06 – 622+00.00	790+00.00 – 797+50.00
627+50.00 – 631+99.52	837+25.00 – 845+50.00
731+75.00 – 739+12.94	868+00.00 – 882+75.00
752+07.10 – 760+02.00	920+00.00 – 940+00.00

SEE NOTE (B)

NEW CONSTRUCTION

NORTHBOUND
782+05.00 – 782+55.00

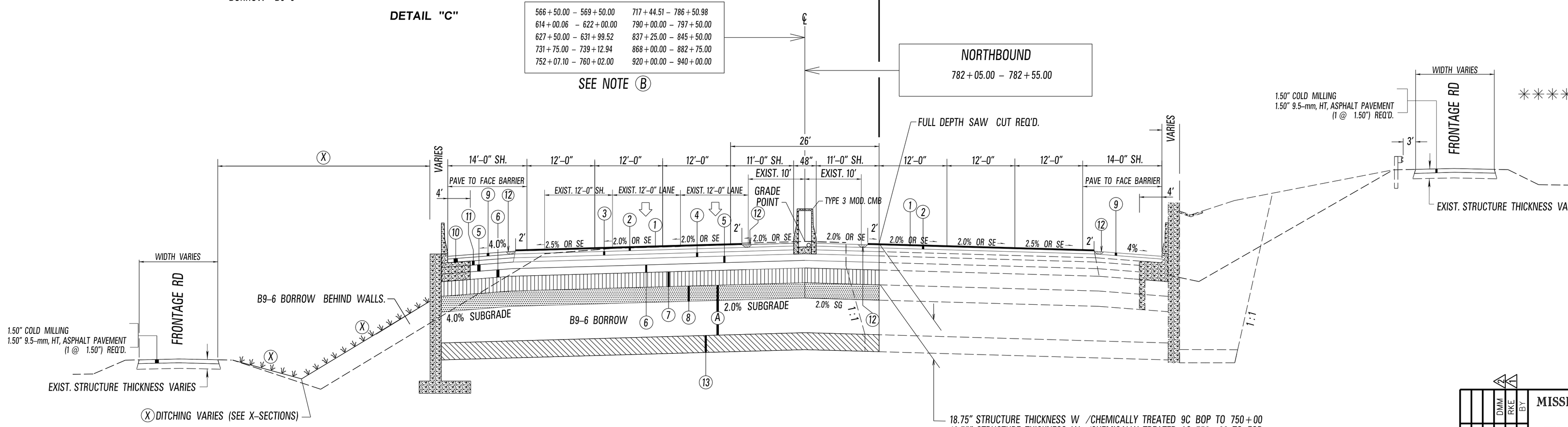

NOT TO SCALE

(A) 3' OF UNDERCUT BACKFILLED W /B9–6 BORROW EXCAVATION MATERIAL TO BOTTOM OF SUBGRADE ALL CUT REQURIED WILL BE EXCESS

I-55 WIDENING
6 LANE SECTION
(NEW MEDIAN BARRIER w/ RETAINING WALLS)

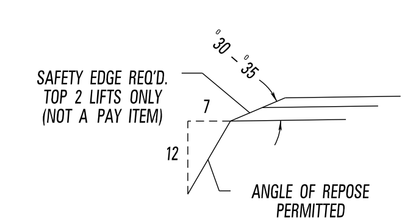

DATE	REVISION	BY
3/11/16	ADDED STATIONS & NOTE B	DMM
02/22/16	UPDATED LABEL	RKE

MISSISSIPPI DEPARTMENT OF TRANSPORTATION

TYPICAL SECTIONS

I - 55

PROJECT NO. IM–0055–02(246)
HINDS COUNTY

WORKING NUMBER TS–3

SHEET NUMBER 11

FILENAME: TYPICALS.DGN

DESIGN TEAM NEEL–SCHAFFER CHECKED _____ DATE _____

PLAN
ROADWAY DESIGN DIVISION
MISSISSIPPI DEPARTMENT OF TRANSPORTATION

3/9/2016 8:13 AM TYPICALS.DGN

ADDENDUM

FMS CON:106023/309000

STATE	PROJECT NO.
MISS.	IM-0055-02(246)

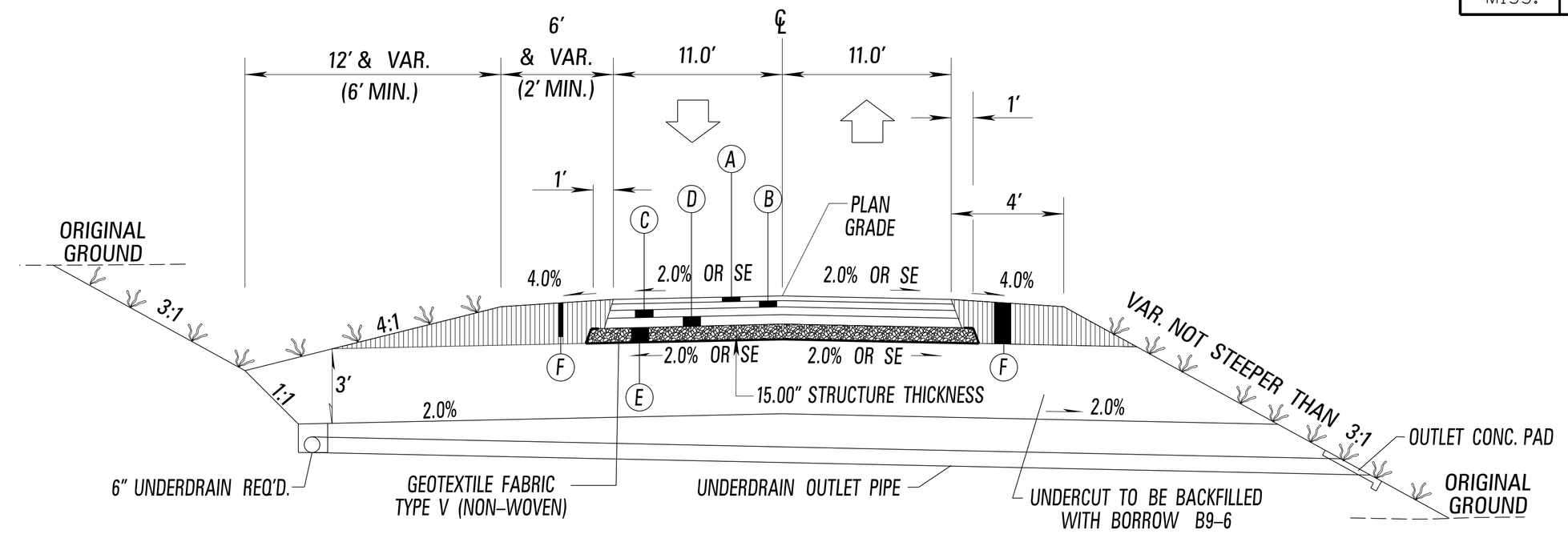

TYPICAL SECTION
NEW CONSTRUCTION
WEST FRONTAGE ROAD
STA. 775+00 - STA. 788+00

(A) 1.50" 9.5-mm, HT, ASPHALT PAVEMENT (1 @ 1.5") REQ'D.
(B) 2.00" 12.5-mm, HT, ASPHALT PAVEMENT (1 @ 2.0") REQ'D.
(C) 2.50" 19.0-mm, ST, ASPHALT PAVEMENT (1 @ 2.5") REQ'D.
(D) 3.00" 19.0-mm, ST, ASPHALT PAVEMENT (1 @ 3.0") REQ'D.
(E) 6" DEPTH CRUSHED STONE WITH GEOTEXTILE FABRIC REQ'D. TYPE V (NON-WOVEN)
(F) 15" & VAR. DEPTH UN-TREATED GRANULAR MAT'L (CL 5, GR E)

INDICATES AREAS TO BE PLATED TREATED IN ACCORDANCE WITH THE VEGETATION SCHEDULE. (SEE WK. SH. VS-1).

(G) 1.5" & VAR. DEPTH UN-TREATED GRANULAR MAT'L (CL 5, GR E)
(H) VAR. DEPTH LEVELING REQ'D. HT, 12.5 mm MIXTURE REQ'D.

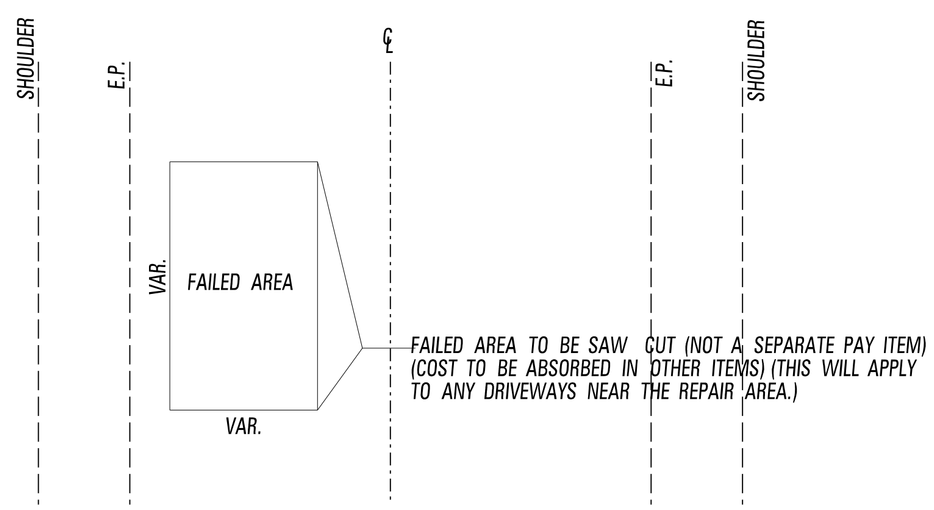

NOTES:
1. THE CONTRACTOR SHALL REPAIR ANY FAILED AREAS IN THE EXISTING ROADWAY, INCLUDING THE FRONTAGE ROAD THAT ARE IDENTIFIED BY THE ENGINEER. THE CONTRACTOR SHALL BE AWARE THAT SOME OF THESE REPAIRS MAY BE OF AN EMERGENCY IN NATURE AND SHALL BE REPAIRED IMMEDIATELY. (PAY ITEM 907-503-M001 REPAIR OF FAILED AREAS IN ASPHALT AND/OR CONCRETE PAVEMENT) REMOVAL AND DISPOSAL OF MATERIAL, TRAFFIC CONTROL, EQUIPMENT AND MATERIALS EXCEPT NO. 2,3 & 4 IN THE TYPICAL SECTION SHOWN WILL BE COST ABSORBED IN PAY ITEM 907-503-M001.
2. THE FAILED AREAS ON FRONTAGE ROADS ARE ESTIMATED AT 35% OF THE TOTAL AREA ON THE WEST AND EAST FRONTAGE ROADS. THE FAILED AREAS ON I-55 ARE ESTIMATED AT 5% OF THE TOTAL AREA OF THE EXISTING SOUTHBOUND I-55.

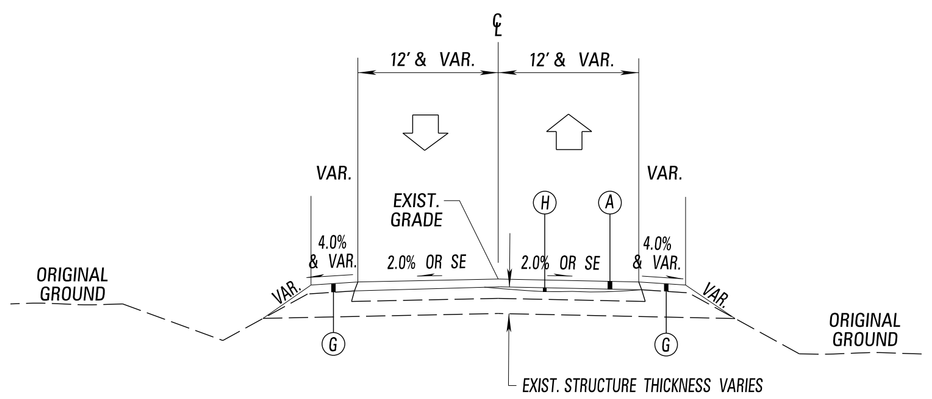

TYPICAL SECTION
FRONTAGE ROADS

OVERLAY, LEVELING (AS DIRECTED BY THE ENGINEER), & GRANULAR MATERIAL IS REQ'D. WEST AND EAST FRONTAGE ROAD FROM B.O.P. TO INTERSECTION OF MCDOWELL ROAD.

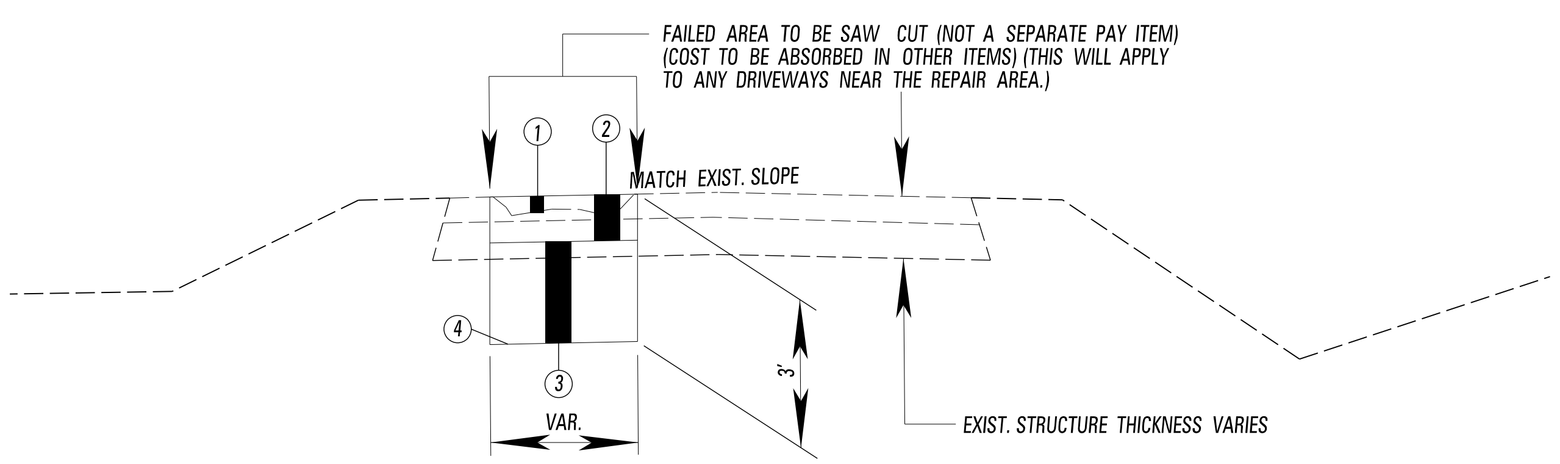

TYPICAL SECTION
FAILED AREAS

(1) FAILED AREA
(2) 10.0" 19.0-mm, HT, ASPHALT PAVEMENT (2 @ 3.25", 1 @ 3.50") REQ'D.
(3) 2.16' & VAR. DEPTH CRUSHED STONE REQ'D.
(4) GEOTEXTILE TYPE V NON-WOVEN REQ'D.

1

ESTIMATED QUANTITIES FOR FAILED AREAS (FRONTAGE ROADS)

FRONTAGE ROAD	TOTAL SQ.YDS.	ESTIMATED AT 35%	PAVED AREA (SQ.YDS.)		ASPHALT 10",19.0mm TONS (HT)	CRUSHED STONE TON	GEOTEXTILE FABRIC SQ.YD.
WEST	99726	34904.1	34904.1		19197.26	46412	34904
EAST	92254	32288.9	32288.9		17758.90	42935	32289
					TON	TON	SQ. YDS.
					36956.16	89347	67193

ESTIMATED QUANTITIES FOR FAILED AREAS (I-55)

EXISTING SOUTH BOUND	TOTAL SQ.YDS.	ESTIMATED AT 5%	PAVED AREA (SQ.YDS.)		ASPHALT 10",19.0mm TONS (HT)	CRUSHED STONE TON	GEOTEXTILE FABRIC SQ.YD.
S.B. INTERSTATE I-55	386131	19307	19306.55		10618.60	25671.84	19307
					TON	TON	SQ. YDS.
					10618.60	25671.84	19307

NOT TO SCALE

DATE	REVISION	BY
3/11/16	REVISED CRUSHED STONE QUANTITIES	DMM

MISSISSIPPI DEPARTMENT OF TRANSPORTATION

TYPICAL SECTIONS

NEW CONSTRUCTION
WEST FRONTAGE ROAD
& FAILED AREAS

PROJECT NO. IM-0055-02(246)
HINDS COUNTY

WORKING NUMBER TS-8

FILENAME: TYPICALS.DGN
DESIGN TEAM NEEL-SCHAFFER CHECKED _____ DATE _____

SHEET NUMBER 16

PLAN
ROADWAY DESIGN DIVISION
MISSISSIPPI DEPARTMENT OF TRANSPORTATION

3/8/2016 1:43 PM TYPICALS.DGN

ADDENDUM

FMS CON:106023/309000

STATE	PROJECT NO.
MISS.	IM-0055-02(246)

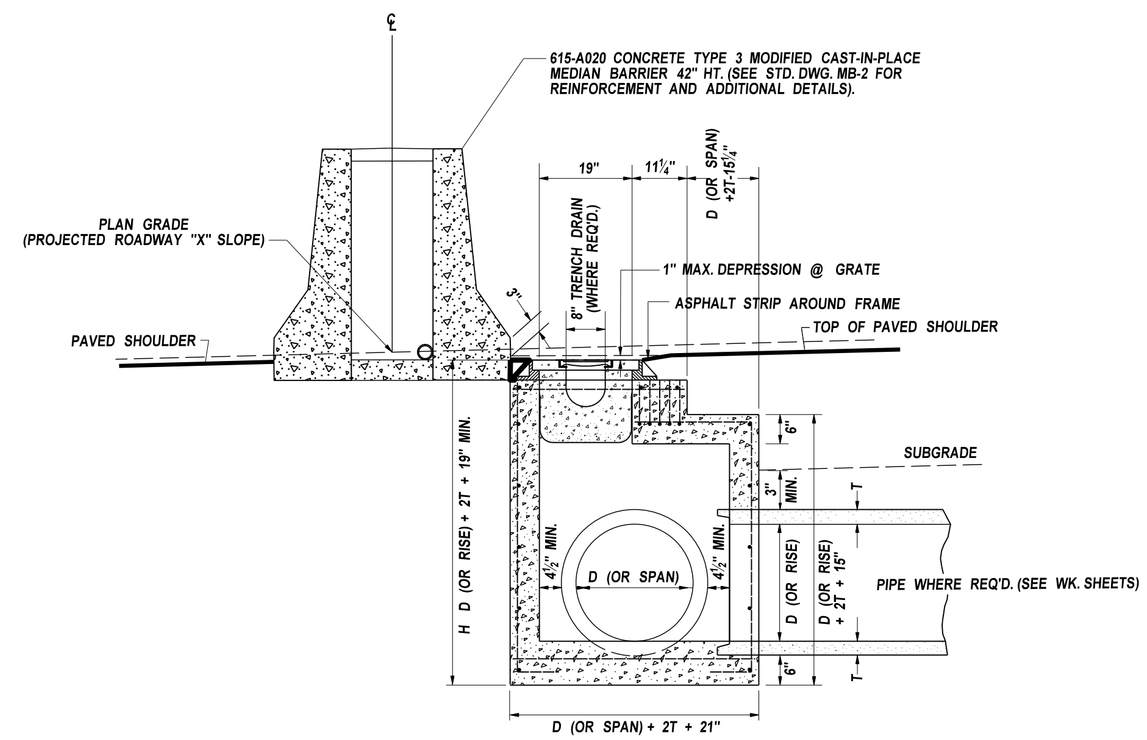

GI-1A

MEDIAN INLET PLACEMENT (SHOWN W / TRENCH DRAIN)

(RT. SIDE SHOWN, SIMILAR FOR LT. SIDE)
SEE WK. SHEETS FOR LOCATIONS

1

TRENCH DRAIN NOTES :

1. CONCRETE SHALL BE PLACED IN A MONOLITHIC POUR.
2. CONSTRUCTION JOINTS WILL BE ALLOWED IF APPROVED BY THE ENGINEER (AS PER SPECIAL PROVISION 907-604-7 (1)
3. CONNECTION TO THE PROPOSED INLET MAY REQUIRE THE USE OF A TRANSITIONAL FITTING AND / OR SECTIONS OF PIPE TO PROVIDE A SUITABLE CONNECTION WITHOUT DAMAGE TO THE GRATE, DRAIN OR INLET.
4. CONNECTIONS TO THE INLETS SHALL BE AS RECOMMENDED BY THE MANUFACTURER AND APPROVED BY THE ENGINEER PRIOR TO CONSTRUCTION.
5. THE CONCRETE ENCASEMENT ADJACENT AND BENEATH THE DRAIN CHANNEL SHALL BE A MINIMUM THICKNESS OF SIX INCHES (6").
6. EXCAVATION AND BACKFILL WILL NOT BE MEASURED FOR SEPARATE PAYMENT.
7. ALL COST FOR THE TRENCH DRAIN, INCLUDING ALL MATERIALS, FABRICATING, FURNISHING AND INSTALLING TRENCH DRAIN COMPONENTS, EQUIPMENT, TOOLS LABOR AND ANY INCIDENTALS NECESSARY TO COMPLETE WORK SHALL BE INCLUDED IN THE PRICE BID FOR CONTRACT ITEM.

NOT TO SCALE

DATE	REVISION	BY
03/15/16	REMOVED DETAILS, UPDATED NOTE	RKE

MISSISSIPPI DEPARTMENT OF TRANSPORTATION

TYPICAL SECTIONS

INLET PLACEMENT @ MEDIAN BARRIER WALLS & TRENCH DRAIN DETAILS

PROJECT No. IM-0055-02(246)
HINDS COUNTY

FILENAME: TYPICALS.DGN
DESIGN TEAM NEEL-SCHAFFER CHECKED _____ DATE _____

WORKING NUMBER TS-16

SHEET NUMBER 24

PLAN
ROADWAY DESIGN DIVISION
MISSISSIPPI DEPARTMENT OF TRANSPORTATION

3/15/2016 11:34AM TYPICALS.DGN

ADDENDUM

FMS CON:106023/309000

STATE	PROJECT NO.
MISS.	IM-0055-02(246)

SUMMARY OF QUANTITIES (SHEET 1)

PAY ITEM NO.	PAY ITEM	UNIT	PRELIMINARY	FINAL	
201-A001	CLEARING AND GRUBBING	LS	100%		4
202-B022	REMOVAL OF CONCRETE MEDIAN BARRIER	LF	25809		
202-B023	REMOVAL OF CONCRETE MEDIAN BARRIER, PRECAST	LF	88826		
202-B025	REMOVAL OF CONCRETE PAVED DITCH	SY	459		
202-B036	REMOVAL OF CONCRETE SLOPE PAVING	SY	298		
202-B042	REMOVAL OF FLARED END SECTION, ALL SIZES	EA	19		
202-B057	REMOVAL OF INLETS, ALL SIZES	EA	95		
202-B063	REMOVAL OF OVERHEAD SIGN INCLUDING PANELS, TRUSS, SUPPORTS & FOOTING	EA	2		
202-B064	REMOVAL OF PIPE, 8" AND ABOVE	LF	3049		
202-B070	REMOVAL OF SIGN INCLUDING POST & FOOTING	EA	137		
202-B072	REMOVAL OF SOIL CEMENT TREATED BASE, ALL DEPTHS	SY	1000		5
202-B078	REMOVAL OF PAVEMENT, ALL TYPES AND DEPTHS	SY	340959		1
202-B102	REMOVAL OF GUARD RAIL	LF	2942		
202-B142	REMOVAL OF JUNCTION BOX	EA	7		△1
202-B149	REMOVAL OF TRAFFIC STRIPE	MI	4		
202-B189	REMOVAL OF IMPACT ATTENUATOR	EA	17		
202-B196	REMOVAL OF DEBRIS AND SAND FROM PIPE, ALL SIZES	LF	5000		6 △1
202-B247	REMOVAL OF PULL BOX	EA	2		7
202-B248	REMOVAL OF MANHOLE	EA	1		
202-B295	REMOVAL OF TRENCH DRAIN, ALL SIZES, ALL TYPES	LF	400		5
202-B297	REMOVAL OF EXISTING DEMARCATION CABINET AND EQUIPMENT	EA	1		8
203-A004	UNCLASSIFIED EXCAVATION, LVM, AH	CY	1000		5
203-B004	ROCK EXCAVATION, LVM, AH	CY	1000		5
203-EX035	BORROW EXCAVATION, AH, FME, CLASS B9-6	CY	500065		
203-G003	EXCESS EXCAVATION, FM, AH	CY	419997		
206-A001	STRUCTURE EXCAVATION	CY	8502		
209-A004	GEOTEXTILE STABILIZATION, TYPE V, NON-WOVEN	SY	89643		10
211-B001	TOPSOIL FOR SLOPE TREATMENT, CONTRACTOR FURNISHED	CY	33680		
213-C001	SUPERPHOSPHATE	TON	64		
907-216-A001	SOLID SODDING	SY	9317		
217-A001	DITCH LINER	SY	3306		
219-A001	WATERING	KGAL	186		
220-A001	INSECT PEST CONTROL	ACRE	64		
221-A001	PORTLAND CEMENT CONCRETE PAVED DITCH	CY	2240		2 3
223-A001	MOWING	ACRE	1000		9
224-A001	SOIL REINFORCING MAT	SY	2680		
907-225-A001	GRASSING	ACRE	127		
907-225-B001	AGRICULTURAL LIMESTONE	TON	64		
907-225-C001	MULCH, VEGETATIVE MULCH	TON	253		
907-226-A001	TEMPORARY GRASSING	ACRE	127		
234-A001	TEMPORARY SILT FENCE	LF	1305		
907-234-D001	INLET SILTATION GUARD	EA	44		
907-234-E001	RESET INLET SILTATION GUARD	EA	5		
907-237-A003	WATTLES, 20"	LF	4000		

1. INCLUDES ESTIMATED 189602 S.Y. CONCRETE PAVEMENT OVERLAID WITH ASPHALT AND BRIDGE END PAVEMENT AND DRIVEWAYS.
2. INCLUDES ESTIMATED 6 C.Y. FOR DAMAGED /MISSING CONCRETE COLLARS AROUND EXISTING ITS PULLBOXES.
3. INCLUDES 819 CU. YD. FOR PAVED FLUMES. INCLUDES 83 CU. YD. FOR VEGETATION CONTROL PAD.
4. INCLUDES QUANTITY FOR REMOVING DEBRIS SUCH AS CONCRETE, REINFORCEMENT, AND ANY OTHER ITEMS LEFT ON SITE FROMPREVIOUS CONTRACT NOT TO BE INCORPORATED INTO THIS PROJECT AS DIRECTED BY THE ENGINEER.
5. ESTIMATED TO BE USED AS DIRECTED BY THE ENGINEER
△1 6. ESTIMATED QUANTITY TO BE USED AS DIRECTED BY THE ENGINEER FOR REMOVING SAND AND DEBRIS FROM EXISTING PIPES.
7. INCLUDES 1 TRAFFIC SIGNAL PULL BOX AT CONTROLLER AND 1 FIBER OPTIC PULL BOX AT STA. 947+35 WHERE REPLACING WITH TYPE 5 PULL BOX. REMAINING TRAFFIC SIGNAL BOXES TO BE INCLUDED IN 202–B132.
8. THE EXISTING DEMARCATION CABINET LOCATED AT STA. 932+50 TO BE REMOVED. THE CABINET AND EXISTING EQUIPMENT INSIDE IS TO BE SALVAGED TO MDOT. CONTRACTOR SHALL INSTALL NEW DEMARC CABINET NEXT TO EXISTING. USE EXISTING ELECTRICAL SERVICE AND BREAKER BOX. NEW CONDUIT AND POWER CIRCUIT TO DEMARC REQUIRED. ALL ITEMS INVOLVED IN REMOVING THE BREAKER BOX TO EXISTING CABINET ARE TO BE PAID FOR UNDER PAY ITEM 202–B297.
9. ESTIMATED QUANTITY BASED ON MOWING THE ENTIRE PROJECT LIMITS 3 TIMES A YEAR FOR 2 YEARS.
10. INCLUDES 3143 SQ. YDS. FOR UNDERDRAINS

DATE	REVISION	BY
03/11/16	REVISED PAY ITEMS AND NOTES	MTB

MISSISSIPPI DEPARTMENT OF TRANSPORTATION

SUMMARY OF QUANTITIES

COUNTY: HINDS

PROJ. NO.: IM-0055-02(246)

FILENAME: SQS_SH.DGN

DESIGN TEAM NEEL-SCHAFFER CHECKED _____ DATE _____

WORKING NUMBER SQ-1

SHEET NUMBER 30

PLAN
ROADWAY DESIGN DIVISION
MISSISSIPPI DEPARTMENT OF TRANSPORTATION

3/10/2016 9:00 AM SQS_SH.DGN

ADDENDUM

FMS CON:106023/309000

STATE	PROJECT NO.
MISS.	IM-0055-02(246)

SUMMARY OF QUANTITIES (SHEET 3)

PAY ITEM NO.	PAY ITEM	UNIT	PRELIMINARY	FINAL	
907-403-A027	9.5-MM, HT, ASPHALT PAVEMENT	TON	17915		
907-403-A028	12.5-MM, HT, ASPHALT PAVEMENT	TON	375		
907-403-A029	19-MM, HT, ASPHALT PAVEMENT	TON	152570		
907-403-AA001	STONE MATRIX ASPHALT, 9.5 MM MIXTURE	TON	42078		
907-403-AA002	STONE MATRIX ASPHALT, 12.5 MM MIXTURE	TON	34577		
907-403-B021	12.5-MM, HT, ASPHALT PAVEMENT, LEVELING	TON	4100		3
907-403-S004	JOINT SEALANT	MI	30		7
907-406-D001	FINE MILLING OF BITUMINOUS PAVEMENT, ALL DEPTHS	SY	58155		
907-407-A001	ASPHALT FOR TACK COAT	GAL	95368		
907-413-E001	SAWING AND SEALING TRANSVERSE JOINTS IN ASPHALT PAVEMENT	LF	706		
423-A001	RUMBLE STRIPS, GROUND IN	MI	28		
501-E001	EXPANSION JOINTS, WITHOUT DOWELS	LF	288		1
502-A001	REINFORCED CEMENT CONCRETE BRIDGE END PAVEMENT	SY	298		2
503-C007	SAW CUT, FULL DEPTH	LF	75080		
503-E002	TIE BARS, NO. 5 DEFORMED DRILLED AND EPOXIED OR GROUTED	EA	16		
907-503-M001	REPAIR OF FAILED AREAS IN ASPHALT AND/OR CONCRETE PAVEMENT	SY	86500		10
907-601-A001	CLASS "B" STRUCTURAL CONCRETE	CY	7		8
907-601-B003	CLASS "B" STRUCTURAL CONCRETE, MINOR STRUCTURES	CY	274		5
602-A001	REINFORCING STEEL	LBS	26573		6 9
907-603-ALT01	18" TYPE A ALTERNATE PIPE	LF	144		4
603-CA002	18" REINFORCED CONCRETE PIPE, CLASS III	LF	8306		1
603-CA003	24" REINFORCED CONCRETE PIPE, CLASS III	LF	1128		
603-CA004	30" REINFORCED CONCRETE PIPE, CLASS III	LF	184		
603-CA005	36" REINFORCED CONCRETE PIPE, CLASS III	LF	208		
603-CA006	42" REINFORCED CONCRETE PIPE, CLASS III	LF	104		
603-CA126	18" REINFORCED CONCRETE PIPE, CLASS V, JACKED OR BORED	LF	72		
603-CB001	18" REINFORCED CONCRETE END SECTION	EA	9		
603-CB002	24" REINFORCED CONCRETE END SECTION	EA	7		
603-CB003	30" REINFORCED CONCRETE END SECTION	EA	2		
603-CB005	42" REINFORCED CONCRETE END SECTION	EA	1		
603-CE001	22" X 13" CONCRETE ARCH PIPE, CLASS A III	LF	848		
603-CE002	29" X 18" CONCRETE ARCH PIPE, CLASS A III	LF	2536		
603-CE003	36" X 23" CONCRETE ARCH PIPE, CLASS A III	LF	248		
603-CE004	44" X 27" CONCRETE ARCH PIPE, CLASS A III	LF	248		
603-CE006	58" X 36" CONCRETE ARCH PIPE, CLASS A III	LF	240		

1. ESTIMATED FOR THE FULL WIDTH OF BRIDGE
2. ESTIMATED FOR PARTIAL WIDTH OF BRIDGE. PART OF BRIDGE END PAVEMENT PLACED ON PREVIOUS PROJECT.
3. ESTIMATED TO BE USED AS DIRECTED BY THE ENGINEER
4. REINFORCED CONCRETE PIPE, CLASS III OR CORRUGATED POLYETHYLENE PIPE OR PVC
5. ESTIMATED QUANTITY INCLUDES 18 CU. YDS. FOR SIGN FOOTINGS AND 17 CU. YDS. FOR JUNCTION BOXES.
6. ESTIMATED QUANTITY INCLUDES 1202 LBS FOR GROUND MOUNTED SIGN FOOTINGS AND 2682 LBS FOR JUNCTION BOXES.
7. ESTIMATED QUANTITY TO BE USED AT LONGITUDINAL VERTICAL SAW CUT LINE BETWEEN THE TOP TWO LIFTS OF ASPHALT.
8. INCLUDES 7 CU. YDS. CL. B CONCRETE FOR REPAIR OF WINGWALL LT. STA. 766+85 ON THE NW RAMP AT ELTON RD. (SEE WK. SH. NO. BX1 OF 1).
9. INCLUDES 460 LBS FOR REPAIR OF WINGWALL LT. STA. 766+85 ON THE NW RAMP AT ELTON RD. (SEE WK. SH. NO. BX1 OF 1).
10. ESTIMATED QUANTITY INCLUDES 367193 SQ. YDS. FOR FRONTAGE ROADS AND 19307 SQ. YDS. FOR I-55 SOUTH BOUND.

DATE	REVISED QUANTITY REVISION	BY
3/11/16		DNM

MISSISSIPPI DEPARTMENT OF TRANSPORTATION
SUMMARY OF QUANTITIES

COUNTY: HINDS
PROJ. NO.: IM-0055-02(246)

FILENAME: SQS_SH.DGN
DESIGN TEAMNEEL-SCHAFFERCHECKED_____DATE_____

WORKING NUMBER SQ-3
SHEET NUMBER 32

PLAN
ROADWAY DESIGN DIVISION
MISSISSIPPI DEPARTMENT OF TRANSPORTATION

3/9/2016 1:07 PM SQS_SH.DGN

ADDENDUM

FMS CON:106023/309000

STATE	PROJECT NO.
MISS.	IM-0055-02(246)

SUMMARY OF QUANTITIES (SHEET 7)

PAY ITEM NO.	PAY ITEM	UNIT	PRELIMINARY	FINAL	
907-630-I013	METAL OVERHEAD SIGN SUPPORTS, ASSEMBLY NO. 12, CONTRACTOR DESIGNED	LS	100%	△1	⑩
907-630-I014	METAL OVERHEAD SIGN SUPPORTS, ASSEMBLY NO. 13, CONTRACTOR DESIGNED	LS	100%	△1	⑩
907-630-I015	METAL OVERHEAD SIGN SUPPORTS, ASSEMBLY NO. 14, CONTRACTOR DESIGNED	LS	100%	△1	⑩
907-630-I016	METAL OVERHEAD SIGN SUPPORTS, ASSEMBLY NO. 15, CONTRACTOR DESIGNED	LS	100%	△1	⑩
907-630-I017	METAL OVERHEAD SIGN SUPPORTS, ASSEMBLY NO. 16, CONTRACTOR DESIGNED	LS	100%	△1	⑩
907-630-I018	METAL OVERHEAD SIGN SUPPORTS, ASSEMBLY NO. 17, CONTRACTOR DESIGNED	LS	100%	△1	⑩
907-630-I019	METAL OVERHEAD SIGN SUPPORTS, ASSEMBLY NO. 18, CONTRACTOR DESIGNED	LS	100%	△1	⑩
907-630-I020	METAL OVERHEAD SIGN SUPPORTS, ASSEMBLY NO. 19, CONTRACTOR DESIGNED	LS	100%	△1	⑩
907-630-I021	METAL OVERHEAD SIGN SUPPORTS, ASSEMBLY NO. 20, CONTRACTOR DESIGNED	LS	100%	△1	⑩
907-630-I022	METAL OVERHEAD SIGN SUPPORTS, ASSEMBLY NO. 21, CONTRACTOR DESIGNED	LS	100%		① ⑩
907-630-I023	METAL OVERHEAD SIGN SUPPORTS, ASSEMBLY NO. 22, CONTRACTOR DESIGNED	LS	100%		① ⑩
630-K001	WELDED & SEAMLESS STEEL PIPE POSTS, 3"	LF	99		
630-K002	WELDED & SEAMLESS STEEL PIPE POSTS, 3 1/2"	LF	324		
630-K003	WELDED & SEAMLESS STEEL PIPE POSTS, 4"	LF	393		
630-K004	WELDED & SEAMLESS STEEL PIPE POSTS, 5"	LF	143		
907-631-A001	FLOWABLE FILL, EXCAVATABLE	CY	1350		
907-631-B001	FLOWABLE FILL, NON-EXCAVATABLE	CY	95		
635-A001	VEHICLE LOOP ASSEMBLIES	LF	1488		
636-A001	SHIELDED CABLE, AWG #18, 4 CONDUCTOR	LF	1610		
907-637-A001	EQUIPMENT CABINET, TYPE B	EA	8		②
638-A005	LOOP DETECTOR AMPLIFIER, CARD RACK MOUNTED, 4 CHANNEL	EA	5	△1	
				△1	
907-639-A002	TRAFFIC SIGNAL EQUIPMENT POLE, TYPE II, 17' SHAFT, 50' ARM	EA	2	△1	③ ⑩
907-639-A006	TRAFFIC SIGNAL EQUIPMENT POLE, TYPE II, 17' SHAFT, 30' ARM	EA	1	△1	③ ⑩
907-639-A007	TRAFFIC SIGNAL EQUIPMENT POLE, TYPE II, 17' SHAFT, 40' ARM	EA	1	△1	③ ⑩
907-639-A009	TRAFFIC SIGNAL EQUIPMENT POLE, TYPE II, 17' SHAFT, 60' ARM	EA	1	△1	③ ⑩
907-639-A115	TRAFFIC SIGNAL EQUIPMENT POLE, TYPE III, 17' SHAFT, 45' & 45' ARMS	EA	1	△1	③ ⑩
907-639-C002	POLE FOUNDATIONS, 36" DIAMETER	CY	3		
907-639-C004	POLE FOUNDATIONS, 30" DIAMETER	CY	9		
907-639-E001	CAMERA POLE WITH FOUNDATION, 50' POLE	EA	3		⑩
907-639-F001	DETECTOR POLE WITH FOUNDATION, 35' POLE	EA	4		⑩
640-A016	TRAFFIC SIGNAL HEADS, TYPE 1 LED	EA	12		④
640-A018	TRAFFIC SIGNAL HEADS, TYPE 3 LED	EA	2		④
640-A056	TRAFFIC SIGNAL HEADS, TYPE 2 FYA LED	EA	6		④
907-642-A003	SOLID STATE TRAFFIC ACTUATED CONTROLLERS, TYPE 8A	EA	2		⑤
644-A001	OPTICAL DETECTOR	EA	5		
907-644-B001	OPTICAL DETECTOR CABLE	LF	1110		
644-C002	PHASE SELECTOR, 4 CHANNEL	EA	4		
646-A001	REMOVAL OF EXISTING TRAFFIC SIGNAL EQUIPMENT	LS	100%		⑪ △2
647-A002	PULLBOX, TYPE 3	EA	1		⑥
647-A003	PULLBOX, TYPE 4	EA	13		⑦
647-A004	PULLBOX, TYPE 5	EA	7		⑦
647-A005	PULLBOX, TYPE 2	EA	34		⑧
907-649-A004	VIDEO DETECTION SYSTEM, 1 SENSOR, TYPE 2	EA	3		⑨
907-649-D002	MULTI-SENSOR DETECTION SYSTEM, 1 SENSOR	EA	3		⑨

① FOR ITS / DMS SIGNS.

② INCLUDES 1 GROUND MOUNTED CABINET.

③ TRAFFIC SIGNAL POLES SHALL BE GALVANIZED.

④ TRAFFIC SIGNAL HEADS SHALL BE BLACK IN COLOR WITH BLACK BACK PLATES.

⑤ ALL TRAFFIC SIGNAL CONTROLLERS SHALL BE LYNX BASED AND ETHERNET READY AND COMPATIBLE WITH MDOT'S EXISTING TRAFFIC SIGNAL MANAGEMENT SOFTWARE WHERE FLASHING YELLOW OPERATION IS BEING USED.
ALL TRAFFIC SIGNAL CONTROLLER FIRMWARE SHALL BE CAPABLE OF DELAYING THE ONSET OF THE FLASHING YELLOW ARROW.
ALL MMU'S SHALL BE ETHERNET READY, 16 CHANNEL, AND CAPABLE OF RUNNING 12 DIFFERENT MODES OF FLASHING YELLOW ARROW OPERATION.
TRAFFIC SIGNAL CONTROLLER CABINET SHALL HAVE A 16 LOAD BAY FACILITY, REAR ACCESS DOOR, LAPTOP TRAY, AND DUAL POSITION INTERNAL LED LIGHTING. ALL TRAFFIC SIGNAL CONTROLLER CABINETS SHALL HAVE A 10 POSITION CARD RACK AND TWO 175 WATT MINIMUM POWER SUPPLY AND 8 AVAILABLE SLOTS.
PAY ITEM FOR SOLID STATE TRAFFIC ACTUATED CONTROLLER SHALL INCLUDE ALL MATERIALS, INCIDENTALS, AND LABOR NECESSARY TO INSTALL A COMPLETE AND OPERATIONAL UNIT.

⑥ TO BE USED FOR TRAFFIC SIGNAL CONDUITS AND CABLES.

⑦ TO BE USED FOR ITS COMMUNICATION CONDUITS & CABLES. SPLICE CLOSURES TO BE INSTALLED INSIDE TYPE 5 PULLBOXES (COST ABSORBED).

⑧ INCLUDES 9 EACH FOR TRAFFIC SIGNAL CONDUITS & CABLES. REMAINING QUANTITY TO BE USED FOR ITS ELECTRIC CABLE & CONDUIT.

⑨ DETECTION SHALL BE A COMBINATION OF VIDEO AND MULTI–SENSOR (VIDEO AND RADAR) DETECTION. PAY ITEM FOR DETECTION SHALL INCLUDE ALL MATERIALS, WIRING, EQUIPMENT, LABOR, AND INCIDENTALS NECESSARY TO INSTALL A COMPLETE AND OPERATIONAL SYSTEM. VIDEO DETECTION CABLE (NOT A SEPARATE PAY ITEM) IS TO SUPPLY BOTH POWER AND VIDEO FEED TO DETECTION SYSTEM. VDC IS SHOWN ON PLANS FOR ROUTING PURPOSES ONLY.

⑩ CONTRACTOR SHALL PROVIDE TOUCH UP GALVANIZING SUPPLIED BY POLE MANUFACTURER TO MATCH FINISH. ANY TOUCH UP APPLIED BY CONTRACTOR SHALL BE APPROVED BY ENGINEER. CONTRACTOR REQUIRED TO CLEAN POLES PRIOR TO STANDING (COST ABSORBED).

△2 ⑪ PAY ITEM 646–A001 IS INTENDED FOR REMOVAL OF EXISTING TRAFFIC SIGNAL EQUIPMENT NO LONGER REQUIRED (BASE MOUNTED SIGNAL CABINET, SIGNAL POLES, SIGNAL HEADS, CONTROL WIRES, AND SPAN WIRES) ON TSI–1. REMOVAL OF EQUIPMENT REPLACED SHOWN ON TSI–3 TO BE INCLUDED IN THE RESPECTIVE REPLACEMENT ITEMS. (NOT A SEPARATE PAY ITEM.)
CONTRACTOR SHALL COORDINATE THE DELIVERY OF RETAINED EQUIPMENT WITH MDOT SIGNAL SHOP 601–359–1493. DELIVERY AND STORAGE OF REMOVED EQUIPMENT IS NOT A SEPARATE PAY ITEM AND SHALL BE PAID FOR UNDER PAY ITEM 646–A001.

DATE	REVISION	BY
03/17/16	ADDED PAY ITEM AND NOTE 11.	MTB
02/22/16	UPDATED NOTES	RKE

MISSISSIPPI DEPARTMENT OF TRANSPORTATION

SUMMARY OF QUANTITIES

COUNTY: HINDS

PROJ. NO.: IM-0055-02(246)

WORKING NUMBER SQ-7

SHEET NUMBER 36

FILENAME: SQS_SH.DGN

DESIGN TEAM NEEL-SCHAFFER CHECKED _____ DATE _____

PLAN
ROADWAY DESIGN DIVISION
MISSISSIPPI DEPARTMENT OF TRANSPORTATION

3/9/2016 10:39AM SQS_SH.DGN

ADDENDUM

FMS CON:106023/309000

PIPE CULVERT DRAINAGE STRUCTURES

STATE	PROJECT NO.
MISS.	IM-0055-02(246)

WK. SH. NO.	STATION	ID NUMBER	TYPE	PIPE CULVERTS 18"	24"	30"	36"	42"			22" X 13"	29" X 18"	36" X 23"	44" X 27"		CL. V 18"	END SECTIONS 18"	24"	30"		42"	29" X 18"		44" X 27"	58" X 36"	TRENCH DRAIN	SIZE L	W	H	OPENINGS	DRAWINGS REQ'D.	CLASS "B" CONC.	REINF. STEEL	GRATING	CASTING	PAVED APRON	STRUCTURE EXCAVATION CU YDS EXCAV	EST. DEPTH	GEOTEXTILE	FILTER MATERIAL TYPE "A"	TYPE "B"	COVER	REMARKS
3RT	576+65	10	CONC	8																						56			5.21	2@18"	GI-1A	1.762	98.43	200	244		4.15	4.0				3.0	
3RT	577+60	11	CONC	95																						26			5.21	2@18"	GI-1A	1.442	98.43	200	244		49.26	4.0				3.0	
3RT	579+60	12	CONC	200																						26			5.21	1@18"	GI-1A	1.495	98.43	200	244		103.70	4.0				3.0	
5RT	632+82	23	CONC													72	1									52			5.21	2@18"	GI-1A,FE-1	1.505	98.43	200	244		50.46	4.8				4.6	JACK OR BORE
5RT	633+80	24	CONC	98																						26			5.21	1@18"	GI-1A	1.495	98.43	200	244		48.27	3.8				2.9	
5RT	637+80	25	CONC								140															19.5			4.83	1@22"X13"	GI-1A	1.512	98.37	200	244		83.48	4.2				3.0	
5RT	639+20	26	CONC								98															19.5			4.84	2@22"X13"	GI-1A	1.462	98.50	200	244		69.57	5.0				3.1	
5RT	640+18	27	CONC								16															52			4.84	2@22"X13"	GI-1A, PC-1	1.772	98.50	200	244		10.45	4.6				3.0	
6RT	665+60	28	CONC	300																									5.21	1@18"	GI-1A	1.495	98.43	200	244		155.56	4.0				3.0	
6RT	668+60	29	CONC	260																						13			5.21	2@18"	GI-1A	1.442	98.43	200	244		124.70	3.7				2.8	
6RT	671+20	30	CONC	160																									5.21	2@18"	GI-1A	1.442	98.43	200	244		78.81	3.8				3.0	
7RT	672+80	31	CONC		120																					13			5.75	1@24",1@18"	GI-1A	1.690	109.42	200	244		74.67	4.2				2.8	
7RT	674+00	32	CONC		65																					13			5.75	2@24"	GI-1A	1.652	109.42	200	244		41.41	4.3				2.8	
7RT	674+65	33	CONC		55																					26			5.88	2@24"	GI-1A	1.683	111.11	200	244		35.04	4.3				2.8	
7RT	675+20	34	CONC		80																								6.11	2@24"	GI-1A	1.738	114.10	200	244		46.22	3.9				2.4	
7RT	676+00	35	CONC		80																					13			6.45	2@24"	GI-1A	1.819	118.52	200	244		56.89	4.8				2.8	
7RT	676+80	36	CONC		48																					39			7.30	2@24"	GI-1A, BC-1	2.021	129.57	200	244		41.24	5.8				4.6	STUB INTO BOX CULVERT
7RT	678+00	37	CONC		60																					13			7.44	2@24"	GI-1A, BC-1	2.054	131.39	200	244		53.33	6.0				4.5	STUB INTO BOX CULVERT
7RT	678+60	38	CONC		60																					13			6.23	2@24"	GI-1A	1.766	115.66	200	244		40.89	4.6				3.1	
7RT	679+50	39	CONC		180																					13			5.92	2@24"	GI-1A	1.693	111.63	200	244		104.00	3.9				2.4	
7RT	680+40	40	CONC		90																					13			5.75	2@24"	GI-1A	1.652	109.42	200	244		56.00	4.2				2.8	
7RT	681+30	41	CONC		90																					13			5.75	1@24", 1@18"	GI-1A	1.690	109.42	200	244		65.33	4.9				4.0	
7RT	684+00	42	CONC	270																						13			5.21	2@18"	GI-1A	1.442	98.43	200	244		126.00	3.6				2.7	
7RT	687+00	43	CONC	300																						13			5.21	1@18"	GI-1A	1.495	98.43	200	244		143.89	3.7				2.9	
7RT	689+85	44	CONC								12															13			4.97	1@22"X13"	GI-1, PC-1	1.856	100.19	200	244		8.86	3.9				3.0	
7RT	692+80	45	CONC								16															13			4.99	1@22"X13"	GI-1, PC-1	1.860	100.45	200	244		8.40	3.7				3.0	
7RT	695+73	46	CONC								8															13			4.96	1@22"X13"	GI-1, PC-1	1.853	100.06	200	244		4.20	3.7				3.0	
8RT	715+80	48	CONC								8																		4.54	2@22"X13"	GI-1A, PC-1	1.700	94.60	200	244		4.54	4.0				3.1	
8RT	716+60	49	CONC								80															13			4.54	1@22"X13"	GI-1A	1.443	94.60	200	244		46.57	4.1				2.6	
8RT	717+38	50	CONC								8															13			4.43	2@22"X13"	GI-1A, PC-1	1.674	93.17	200	244		4.20	3.7				2.6	
8RT	719+20	51	CONC								182															13			4.84	1@22"X13"	GI-1A	1.515	98.50	200	244		95.60	3.7				3.2	
8RT	721+00	52	CONC	8																						13			5.23	2@18"	GI-1A, PC-1	1.767	98.69	200	244		4.46	4.3				3.0	
8RT	723+00	53	CONC	200																						13			5.21	1@18"	GI-1A	1.495	98.43	200	244		95.93	3.7				2.9	
8RT	727+81	54	CONC	8																						13			5.21	1@18"	GI-1	1.338	86.43	200	244		4.15	4.0				3.1	
9RT	730+45	61	CONC	295																						13			5.21	1@18"	GI-1A	1.495	98.43	200	244		141.49	3.7				2.9	
9RT	733+40	62	CONC	292																						13			5.21	2@18"	GI-1A	1.442	98.43	200	244		140.05	3.7				2.9	
9RT	736+32	63	CONC	8																						19.5			4.99	2@18"	GI-1A, PC-1	1.710	95.57	200	244		3.84	3.7				2.7	
9RT	738+20	64	CONC	105																						19.5			5.21	1@18"	GI-1A	1.495	98.43	200	244		53.08	3.9				3.0	
9RT	739+25	65	CONC	8																						52			5.07	2@18"	GI-1A, PC-1	1.729	96.61	200	244		4.04	3.6				2.8	
UNIT				L.F.	L.F.	L.F.	L.F.	L.F.			L.F.	L.F.	L.F.	L.F.		L.F.	EA.	EA.	EA.	EA.		EA.	EA.	EA.		L.F.						C.Y.	LB.	LB.	LB.	C.Y.	C.Y.		S.Y.	C.Y.	C.Y.		
CONCRETE	THIS SHEET			2615	928						568					72	1									719						63.591	4001.92	8000	9516		2282.73						

*

* 72' – 18" JACK AND BORE

NOTE: INLET QUANTITIES ARE BASED ON CONCRETE PIPE BEING USED. NO ADJUSTMENT WILL BE MADE FOR ANY OTHER ALTERNATE PIPE USED.

DATE	REVISED SHEET	REVISION	BY
3/11/16			DMM

MISSISSIPPI DEPARTMENT OF TRANSPORTATION

DRAINAGE STRUCTURES

MEDIAN

COUNTY: HINDS

PROJ. NUM.: IM-0055-02(246)

FILENAME: RECAP.DGN

DESIGN TEAM NEEL-SCHAFFER CHECKED _____ DATE _____

WORKING NUMBER EQ-1

SHEET NUMBER 39

PLAN
ROADWAY DESIGN DIVISION
MISSISSIPPI DEPARTMENT OF TRANSPORTATION

3/9/2016 12:59PM RECAP.DGN

ADDENDUM

FMS CON:106023/309000

PIPE CULVERT DRAINAGE STRUCTURES

STATE	PROJECT NO.
MISS.	IM-0055-02(246)

WK. SH. NO.	STATION	ID NUMBER	TYPE	PIPE CULVERTS 18"	24"	30"	36"	42"			22" X 13"	29" X 18"	36" X 23"	44" X 27"	58" X 36"	CL. V 18"	END SECTIONS 18"	24"	30"		42"	29" X 18"		44" X 27"	58" X 36"	TRENCH DRAIN	SIZE L	W	H	OPENINGS	DRAWINGS REQ'D.	CLASS "B" CONC.	REINF. STEEL	GRATING	CASTING	PAVED APRON	STRUCTURE EXCAVATION CU YDS EXCAV	EST. DEPTH	GEOTEXTILE	FILTER MATERIAL TYPE "A"	TYPE "B"	COVER	REMARKS
15LT	902+68	129																											MIN.	1@18"	MI-4	0.670	52.00	500										
15LT	903+35	130																											MIN.	1@18"	MI-4	0.670	52.00	500										
15LT	919+90	131	CONC									8										1							4.39	1@29"X18"	GI-1A,FE-1	1.502	102.24	200	244		6.85	2.5				1.0	
15LT	920+50	132	CONC									60																	4.25	2@29"X18"	GI-1A	1.385	100.42	200	244		27.48	2.8				1.5	
15LT	921+00	133	CONC									50																	4.37	2@29"X18"	GI-1A	1.414	101.98	200	244		26.17	3.2				2.0	
15LT	922+00	134	CONC									100																	5.25	1@29"X18", 1@18"	GI-1A	1.657	113.42	200	244		65.32	4.0				2.8	
15LT	923+00	135	CONC	100																									5.21	2@18"	GI-1A	1.442	98.43	200	244		51.85	4.0				3.0	
15LT	926+00	136	CONC	300																									5.21	2@18"	GI-1A	1.442	98.43	200	244		159.44	4.1				2.9	
15LT	928+50	137	CONC	250																									5.21	1@18"	GI-1A	1.495	98.43	200	244		142.59	4.4				3.2	
16LT	936+10	151	CONC	90																									5.41	1@18"	GI-1A	1.543	101.03	200	244		46.67	4.0				2.9	
16LT	937+00	152	CONC	100																									5.21	2@18"	GI-1A	1.442	98.43	200	244		57.04	4.4				3.2	
16LT	938+00	153	CONC	100																									5.21	2@18"	GI-1A	1.442	98.43	200	244		49.26	3.8				2.6	
16LT	939+00	154	CONC	110																									4.46	2@18"	GI-1A	1.264	88.68	200	244		45.63	3.2				2.0	
16LT	940+10	155	CONC		8													1											4.58	1@24",1@18"	GI-1A,FE-1	1.495	94.21	200	244		4.27	3.6				2.1	
UNIT				L.F.	L.F.	L.F.	L.F.	L.F.			L.F.	L.F.	L.F.	L.F.	L.F.	L.F.	EA.	EA.	EA.	EA.	EA.	EA.	EA.	EA.	EA.	L.F.						C.Y.	LB.	LB.	LB.	C.Y.	C.Y.		S.Y.	C.Y.	C.Y.		
CONCRETE	THIS SHEET			1050	8							218						1				1										18.863	1298.13	3400	2928		682.57						
UNIT				L.F.	L.F.	L.F.	L.F.	L.F.			L.F.	L.F.	L.F.	L.F.	L.F.	L.F.	EA.	EA.	EA.	EA.	EA.	EA.	EA.	EA.	EA.	L.F.						C.Y.	LB.	LB.	LB.	C.Y.	C.Y.		S.Y.	C.Y.	C.Y.		
CONCRETE	SHEET EQ-4			980	8	88	208	8				1674	150	248	240		1	1	2			2		1	2	26						56.758	10611.52	7128	6588	4.256	2811.71						
UNIT				L.F.	L.F.	L.F.	L.F.	L.F.			L.F.	L.F.	L.F.	L.F.	L.F.	L.F.	EA.	EA.	EA.	EA.	EA.	EA.	EA.	EA.	EA.	L.F.						C.Y.	LB.	LB.	LB.	C.Y.	C.Y.		S.Y.	C.Y.	C.Y.		
CONCRETE	SHEET EQ-3			1876	184	88		96				436	96				6	5			1	2										46.409	3146.11	6201	5612	4.256	1547.81						
UNIT				L.F.	L.F.	L.F.	L.F.	L.F.			L.F.	L.F.	L.F.	L.F.	L.F.	L.F.	EA.	EA.	EA.	EA.	EA.	EA.	EA.	EA.	EA.	L.F.						C.Y.	LB.	LB.	LB.	C.Y.	C.Y.		S.Y.	C.Y.	C.Y.		
CONCRETE	SHEET EQ-2			1785		8					280	208					1									643.5						53.624	3171.41	6600	8052		1176.86						
UNIT				L.F.	L.F.	L.F.	L.F.	L.F.			L.F.	L.F.	L.F.	L.F.	L.F.	L.F.	EA.	EA.	EA.	EA.	EA.	EA.	EA.	EA.	EA.	L.F.						C.Y.	LB.	LB.	LB.	C.Y.	C.Y.		S.Y.	C.Y.	C.Y.		
CONCRETE	SHEET EQ-1			2615	928						568					72	1									719						63.591	4001.92	8000	9516		2282.73						
UNIT				L.F.	L.F.	L.F.	L.F.	L.F.			L.F.	L.F.	L.F.	L.F.	L.F.	L.F.	EA.	EA.	EA.	EA.	EA.	EA.	EA.	EA.	EA.	L.F.						C.Y.	LB.	LB.	LB.	C.Y.	C.Y.		S.Y.	C.Y.	C.Y.		
CONCRETE	JOB TOTAL			8306	1128	184	208	104			848	2536	246	248	240	72	9	7	2		1	5		1	2	1388.5						239.245	22229.09	31329	32696	8.512	8501.68						

*

* 72' – 18" JACK OR BORE

NOTE: INLET QUANTITIES ARE BASED ON CONCRETE PIPE BEING USED. NO ADJUSTMENT WILL BE MADE FOR ANY OTHER ALTERNATE PIPE USED.

DATE	REVISED SHEET	REVISION	BY
3/11/16			DMM

MISSISSIPPI DEPARTMENT OF TRANSPORTATION

DRAINAGE STRUCTURES

LEFT AND JOB TOTALS

COUNTY: HINDS

PROJ. NUM.: IM-0055-02(246)

FILENAME: RECAP.DGN

DESIGN TEAM NEEL-SCHAFFER CHECKED _____ DATE _____

WORKING NUMBER EQ-5

SHEET NUMBER 43

PLAN
ROADWAY PLAN DIVISION
MISSISSIPPI DEPARTMENT OF TRANSPORTATION

3/9/2016 1:00 PM RECAP.DGN

ADDENDUM

FMS CON:106023/309000

STATE	PROJECT NO.
MISS.	IM-0055-02(246)

ESTIMATED TRAFFIC SIGNAL QUANTITIES

ITEM NO.	DESCRIPTION	UNITS	TSI-1 I-55 S EAST RAMP AND EAST FRONTAGE ROAD @ SIWELL RD		TSI-3 I-55 S WEST RAMP AND WEST FRONTAGE ROAD @ SIWELL RD		TOTAL	
			ESTIMATED	FINAL	ESTIMATED	FINAL	ESTIMATED	FINAL
635-A001	VEHICLE LOOP ASSEMBLIES	LF			1488		1488	
636-A001	SHIELDED CABLE, AWG #18, 4 CONDUCTOR	LF			1610		1610	
638-A005	LOOP DETECTOR AMPLIFIER, CARD RACK MOUNTED, 4 CHANNEL	EA			5		5	
907-639-A002	TRAFFIC SIGNAL EQUIPMENT POLE, TYPE II, 17' SHAFT, 50' ARM	EA	2				2	
907-639-A006	TRAFFIC SIGNAL EQUIPMENT POLE, TYPE II, 17' SHAFT, 30' ARM	EA	1				1	
907-639-A007	TRAFFIC SIGNAL EQUIPMENT POLE, TYPE II, 17' SHAFT, 40' ARM	EA	1				1	
907-639-A009	TRAFFIC SIGNAL EQUIPMENT POLE, TYPE II, 17' SHAFT, 60' ARM	EA	1				1	
907-639-A115	TRAFFIC SIGNAL EQUIPMENT POLE, TYPE III, 17' SHAFT, 45' AND 45' ARMS	EA	1				1	
907-639-C002	POLE FOUNDATIONS, 36" DIAMETER	CY	3.14				3	
907-639-C004	POLE FOUNDATIONS, 30" DIAMETER	CY	9.09				9	
640-A016	TRAFFIC SIGNAL HEADS, TYPE 1 LED	EA	12				12	
640-A018	TRAFFIC SIGNAL HEADS, TYPE 3 LED	EA	2				2	
640-A056	TRAFFIC SIGNAL HEADS, TYPE 2 FYA LED	EA	3		3		6	
907-642-A003	SOLID STATE TRAFFIC ACTUATED CONTROLLERS, TYPE 8A	EA	1		1		2	
644-A001	OPTICAL DETECTOR	EA	5				5	
907-644-B001	OPTICAL DETECTOR CABLE	LF	1110				1110	
644-C002	PHASE SELECTOR, 4 CHANNEL	EA	2		2		4	
646-A001	REMOVAL OF EXISTING TRAFFIC SIGNAL EQUIPMENT	LS	100%				100%	
647-A002	PULLBOX, TYPE 3	EA	1				1	
647-A005	PULLBOX, TYPE 2	EA	7		2		9	
907-649-A004	VIDEO DETECTION SYSTEM, 1 SENSOR, TYPE 2	EA	3				3	
907-649-D002	MULTI-SENSOR DETECTION SYSTEM, 1 SENSOR	EA	3				3	
653-B001	STREET NAME SIGN, ENCAPSULATED LENS	SF	54				54	
907-658-A005	NETWORK SWITCH, TYPE A	EA	1		1		2	
666-B015	ELECTRIC CABLE, UNDERGROUND IN CONDUIT, IMSA 20-1, AWG 14, 5 CONDUCTOR	LF			475		475	
666-B023	ELECTRIC CABLE, UNDERGROUND IN CONDUIT, IMSA 20-1, AWG 8, 3 CONDUCTOR	LF	55				55	
666-B054	ELECTRIC CABLE, UNDERGROUND IN CONDUIT, IMSA 20-1, AWG 14, 8 CONDUCTOR	LF	1475				1475	
666-C006	ELECTRIC CABLE, AERIAL SUPPORTED, IMSA 20-1, AWG 14, 5 CONDUCTOR	LF			170		170	
666-C017	ELECTRIC CABLE, AERIAL SUPPORTED, IMSA 20-1, AWG 14, 8 CONDUCTOR	LF	297				297	
668-A018	TRAFFIC SIGNAL CONDUIT, UNDERGROUND, TYPE 4, 2"	LF	175		650		825	
668-A020	TRAFFIC SIGNAL CONDUIT, UNDERGROUND, TYPE 4, 3"	LF	95				95	
668-B025	TRAFFIC SIGNAL CONDUIT, UNDERGROUND DRILLED OR JACKED, ROLLED PIPE, 3"	LF	665				665	

1

NOTE:
SEE SUMMARY OF QUANTITIES - (SQ-7 & SQ-8) FOR PAY ITEM FOOTNOTES.

DATE	REVISION	BY
03/11/16	ADDED PAY ITEM	MTB

MISSISSIPPI DEPARTMENT OF TRANSPORTATION

ESTIMATED QUANTITIES

TRAFFIC SIGNAL

Project No.: IM-0055-02(246)
County: Hinds

FILENAME: RECAP.DGN
DESIGN TEAM NEEL-SCHAFFER CHECKED _____ DATE _____

WORKING NUMBER EQ-18

SHEET NUMBER 59

PLAN
ROADWAY DESIGN DIVISION
MISSISSIPPI DEPARTMENT OF TRANSPORTATION

3/8/2016 2:09 PM RECAP.DGN

ADDENDUM

FMS CON:106023/309000

STATE	PROJECT NO.
MISS.	IM-0055-02(246)

LED SIGNAL FACES

12" LENSES W BACKPLATES

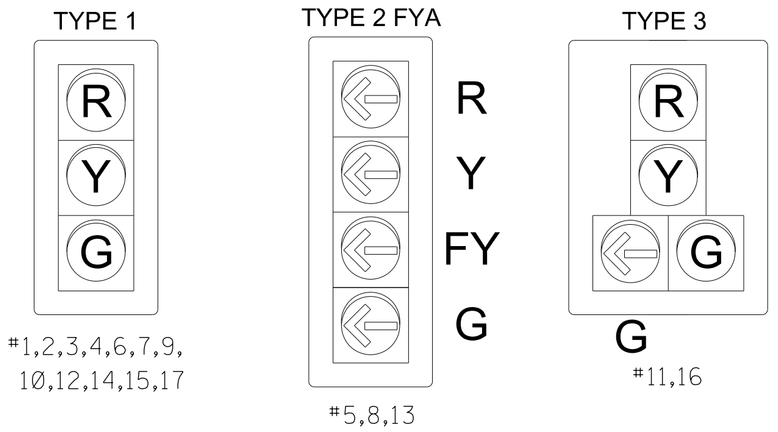

SIGN

R10-12M
30" x 36"
INCLUDED IN COST OF TYPE 2 FYA SIGNAL HEAD

STREET NAME SIGNS

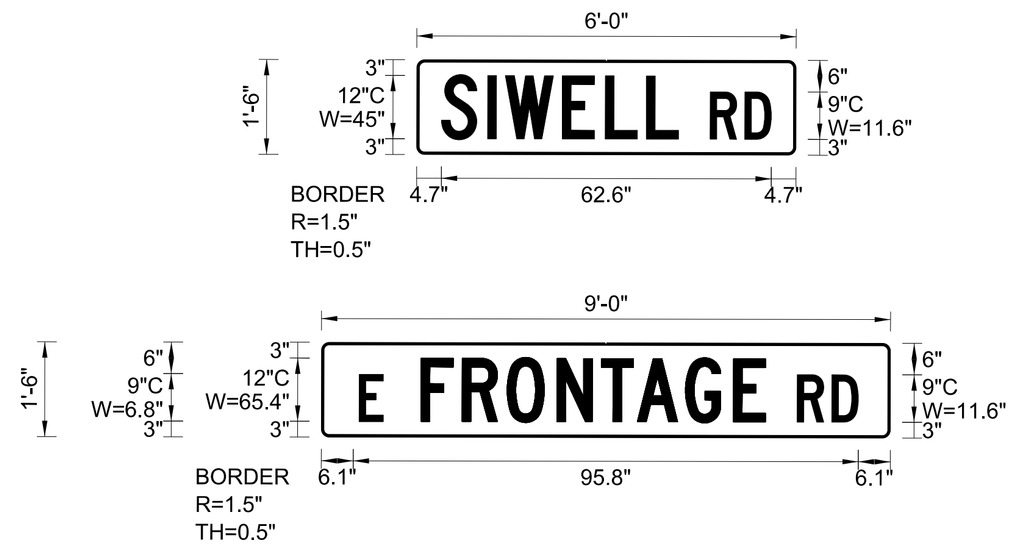

SIGNAL PHASING DIAGRAM

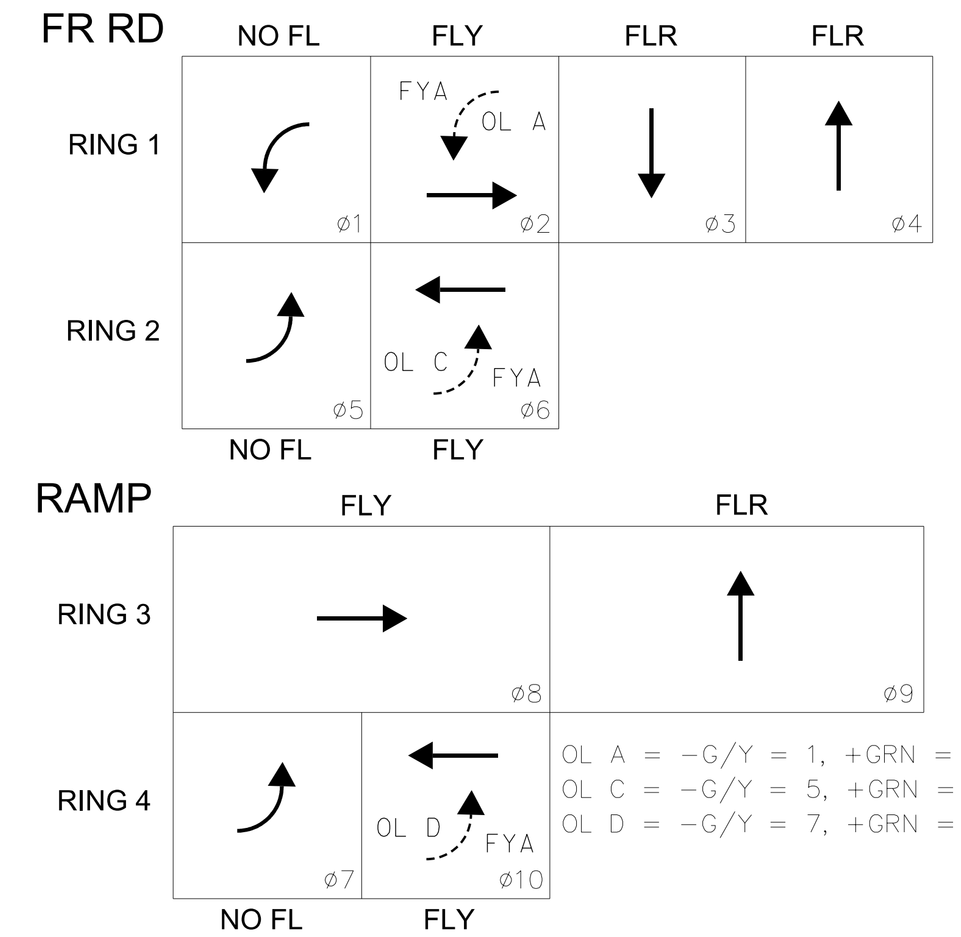

OL A = −G/Y = 1, +GRN = 2, FLR
OL C = −G/Y = 5, +GRN = 6, FLR
OL D = −G/Y = 7, +GRN = 10, FLR

VOLUME/DENSITY TIMING, MINIMUM RECALL − ø2, ø6, ø8 & ø10
EMERGENCY VEHICLE PREEMPT : CH. 1 − ø1 + OL A + ø6 + ø10, CH. 2 − ø2 + ø5 + OL C + ø7 + OL D + ø8, CH. 3 − ø3 + ø10, CH. 4 − ø4 + ø10, CH. 5 − ø2 + ø5 + OL C + ø9

POLE CHART

POLE	MAST ARM(S) LENGTH	MAST ARM ORIENTATION	VERTICAL SHAFT LENGTH	TYPE	MATERIAL	SIGNAL HEAD SPACING *	POLE LOCATION X	POLE LOCATION Y	POLE FOUNDATION SIZE	STREET NAME SIGN
A	45'	EAST	17'	III	STEEL	33'-42'	2320601.478	975981.322	36" x 12'	SIWELL RD
	45'	SOUTH				30'-42'				
B	50'		17'	II	STEEL	23'-35'-44'-47'	2320633.057	975846.896	30" x 10'	
C	60'		17'	II	STEEL	33'-45'-54'-57'	2320819.763	975873.090	30" x 10'	E FRONTAGE RD
D	40'		17'	II	STEEL	25'-37'	2320911.228	975845.781	30" x 10'	SIWELL RD
E	30'		17'	II	STEEL	16'-25'	2320801.317	975758.880	30" x 10'	SIWELL RD
F	50'		17'	II	STEEL	23'-35'-44'-47'	2320879.279	975731.322	30" x 10'	E FRONTAGE RD

NOTES: 1.* NUMBERS REPRESENT THE DISTANCE FROM THE POLE TO EACH SIGNAL OR SIGN. THESE FIGURES SHOULD BE FIELD-VERIFIED.

2. DESIGN WIND SPEED FOR TRAFFIC SIGNAL POLES SHALL BE 90 MPH, ACCORDING TO THE 2001 AASHTO SPECIFICATIONS. USE FATIGUE CATEGORY II, USE 50-YEAR DESIGN SERVICE LIFE. DO NOT CONSIDER GALLOPING OR TRUCK-INDUCED GUSTS. ICE LOADS INCLUDED. TRAFFIC SIGNAL POLES SHALL BE HOT DIPPED GALVANIZED.

3. CONTRACTOR SHALL PROVIDE TOUCH UP GALVANIZING SUPPLIED BY POLE MANUFACTURER TO MATCH FINISH. ANY TOUCH UP APPLIED BY CONTRACTOR SHALL BE APPROVED BY ENGINEER. CONTRACTOR REQUIRED TO CLEAN POLES PRIOR TO STANDING (COST ABSORBED).

DETECTOR CHART

NUMBER	TYPE	ZONE
1	VIDEO	VIDEO - Vz 9 - 50' ZONE
2	MULTI-SENSOR	VIDEO - Vz 7 FOR TURN LANE - 50' ZONE
		RADAR - Rz 8 - 330' FROM STOPBAR
3	MULTI-SENSOR	VIDEO - Vz 1 FOR TURN LANE - 50' ZONE
		RADAR - Rz 6 - 330' FROM STOPBAR
4	VIDEO	VIDEO - Vz 4 A&B - 50' ZONES
5	MULTI-SENSOR	VIDEO - Vz 5 FOR TURN LANE - 50' ZONE
		RADAR - Rz 2 - 180' FROM STOPBAR
		VIDEO - Vz 10 A&B - 165' FROM STOPBAR
6	VIDEO	VIDEO - Vz 3 - 50' ZONE

NOTE:
MUTI-SENSOR DETECTOR #5 TO PROVIDE VIDEO DETECTION FOR Vz 5 (EASTWARD MOVEMENT OF NORTHBOUND LEFT TURN FOR FRONTAGE ROAD) ALONG WITH VIDEO DETECTION FOR Vz 10A AND Vz 10B (WESTWARD MOVEMENT OF ADVANCE DETECTION FOR RAMP)
DAUL PROCESSOR CARD REQUIRED

INTERSECTION NOTES

1. CONTRACTOR SHALL LOCATE EXISTING F.O. (12/SM) DROP CABLE AND CONDUIT FROM TRAFFIC SIGNAL CONTROLLER AT SOUTHBOUND RAMP AND OTHER SIGNALS ON SIWELL AND REROUTE IT INTO NEW CONTROLLER CABINET AT NORTHBOUND RAMP. CONTRACTOR SHALL INSTALL NEW 24 FIBER SPLICE PANEL AND TYPE A NETWORK SWITCH IN CONTROLLER CABINET. EXISTING F.O. (12/SM) DROP CABLE FROM EXISTING TRAFFIC SIGNALS AND NEW F.O. (12/SM) DROP CABLE TO OTN NODE HUT TO BE SPLICED INTO 24 F PANEL (SEE ITS FIBER OPTIC DETAILS). ITS CONTRACTOR WILL REPLACE EXISTING PULLBOX WITH TYPE 5 PULLBOX. SPLICE PANEL AND ANY MODIFICATIONS REQUIRED TO COMPLETE THIS WORK IN THE NEW CONTROLLER CABINET SHALL BE COST ABSORBED. SEE ITS-2 FOR MORE FIBER DETAILS. NEW FIBER DROP QUANTITIES ARE INCLUDED IN ITS RECAP. TYPE A NETWORK SWITCH AND NEW 2" CONDUIT (PVC) TO CONTROLLER ARE INCLUDED IN TRAFFIC SIGNAL RECAP.

2. CONTRACTOR TO INSTALL NEW POWER SERVICE TO NEW TRAFFIC SIGNAL CONTROLLER AND INSTALL A POWER SERVICE PANEL.

3. CONTRACTOR IS RESPONSIBLE FOR ALL CONFIGURATIONS, CONNECTION, MODIFICATIONS, SPLICES, AND NECESSARY EQUIPMENT NEEDED TO INTERCONNECT THE TRAFFIC SIGNAL(S), AS INDICATED IN PLANS (COST ABSORBED). CONTRACTOR SHALL COORDINATE WITH MDOT FOR IP ADDRESSES ON ALL NET WORKABLE DEVICES. DEVICES INCLUDE BUT NOT LIMITED TO: CONTROLLERS, CONFLICT MONITORS, AND DETECTION UNITS. (TSI-1 & TSI-3).

4. CONTRACTOR SHALL MAINTAIN TRAFFIC SIGNAL OPERATION AT ALL TIMES DURING CONSTRUCTION. (TSI-1 & TSI-3). MDOT TO APPROVE TRAFFIC CONTROL PLAN PRIOR TO SWAPPING OUT CONTROLLER AT TSI-3.

5. NEW FIRMWARE WILL BE AVAILABLE IN THE FUTURE THAT MIGHT CHANGE THE PHASING OF THE CONTROLLER SLIGHTLY. CONTRACTOR SHALL CONTACT CONTROLLER SUPPLIER AND MDOT TRAFFIC DIVISION PRIOR TO ORDERING TRAFFIC SIGNAL CONTROLLER TO INSURE LATEST FIRMWARE IS SUPPLIED. (TSI-1 & TSI-3).

△1 6. PAY ITEM 646-A001 IS INTENDED FOR REMOVAL OF EXISTING TRAFFIC SIGNAL EQUIPMENT NO LONGER REQUIRED (BASE MOUNTED SIGNAL CABINET, SIGNAL POLES, SIGNAL HEADS, CONTROL WIRES, AND SPAN WIRES) ON TSI-1. REMOVAL OF EQUIPMENT REPLACED SHOWN ON TSI-3 TO BE INCLUDED IN THE RESPECTIVE REPLACEMENT ITEMS. (NOT A SEPARATE PAY ITEM.)
CONTRACTOR SHALL COORDINATE THE DELIVERY OF RETAINED EQUIPMENT WITH MDOT SIGNAL SHOP 601-359-1493. DELIVERY AND STORAGE OF REMOVED EQUIPMENT IS NOT A SEPARATE PAY ITEM AND SHALL BE PAID FOR UNDER PAY ITEM 646-A001.

DATE	REVISION	BY
03/11/16	ADDED NOTE 6.	MTB

MISSISSIPPI DEPARTMENT OF TRANSPORTATION
TRAFFIC SIGNAL INSTALLATION

I-55 S EAST RAMP AND EAST FRONTAGE ROAD @ SIWELL ROAD CHARTS

COUNTY: HINDS
PROJ. NO.: IM-0055-02(246)

FILENAME: TSI-2.DGN
DESIGN TEAM NEEL-SCHAFFER CHECKED _____ DATE _____

WORKING NUMBER TSI-2
SHEET NUMBER 2002

PLAN
ROADWAY DESIGN DIVISION
MISSISSIPPI DEPARTMENT OF TRANSPORTATION

3/8/2016 1:44 PM TSI-2.DGN

ADDENDUM

STATE	PROJECT NO.
MISS.	IM-0055-02(246)

DESCRIPTION OF SHEET	WORKING NO.	SHEET NO.
DETAILED INDEX (BRIDGE)	DI-BR	8001
DETAILED INDEX (BRIDGE)	DI-BR	8002
SUMMARY OF QUANTITIES (BRIDGE)	SQ-BR	8003
ESTIMATED QUANTITIES (BRIDGE)	EQ-BR	8004
BRIDGE "A" OVERPASS AT STA. 947+81.83 I-55 OVER McDOWELL RD.		
PLAN AND ELEVATION	A1 OF 12	8005
PHASED CONSTRUCTION DETAILS	A2 OF 12	8006
PHASED CONSTRUCTION DETAILS	A3 OF 12	8007
END WALL AND BRIDGE END PAVEMENT REPAIR	A4 OF 12	8008
SPAN DETAILS	A5 OF 12	8009
BRIDGE DECK REPAIR AND MEDIAN BARRIER LAYOUT	A6 OF 12	8010
MISCELLANEOUS SPAN DETAILS	A7 OF 12	8011
3'-6" MEDIAN RAILING DETAILS	A8 OF 12	8012
EXISTING BRIDGE INFORMATION 1	A9 OF 12	8013
EXISTING BRIDGE INFORMATION 2	A10 OF 12	8014
EXISTING BRIDGE INFORMATION 3	A11 OF 12	8015
EXISTING BRIDGE INFORMATION 4	A12 OF 12	8016
BRIDGE "C" UNDERPASS AT STA.28+85.33 I-55 UNDER ELTON RD.		
PLAN AND ELEVATION	C1 OF 4	8017
MISCELLANEOUS SPAN DETAILS	C2 OF 4	8018
EXISTING BRIDGE INFORMATION 1	C3 OF 4	8019
EXISTING BRIDGE INFORMATION 2	C4 OF 4	8020
I-55 SOUTH RETAINING WALLS		
GENERAL NOTES, CONSTRUCTION NOTES AND MISC. DETAILS	WGN1 OF 1	8021
RETAINING WALL "B" GENERAL PLAN AND ELEVATION (PANELS 1 TO 12)	WB1 OF 14	8022
RETAINING WALL "B" GENERAL PLAN AND ELEVATION (PANELS 13 TO 24)	WB2 OF 14	8023
RETAINING WALL "B" WALL DETAILS (PANELS 1 TO 4)	WB3 OF 14	8024
RETAINING WALL "B" WALL DETAILS (PANELS 5 TO 8)	WB4 OF 14	8025
RETAINING WALL "B" WALL DETAILS (PANELS 9 TO 16)	WB5 OF 14	8026
RETAINING WALL "B" WALL DETAILS (PANELS 17 TO 20)	WB6 OF 14	8027
RETAINING WALL "B" WALL DETAILS (PANELS 21 TO 24)	WB7 OF 14	8028
RETAINING WALL "B" WALL REINFORCING DETAILS (PANELS 1 TO 4)	WB8 OF 14	8029
RETAINING WALL "B" WALL REINFORCING DETAILS (PANELS 5 TO 8)	WB9 OF 14	8030
RETAINING WALL "B" WALL REINFORCING DETAILS (PANELS 9 TO 16)	WB10 OF 14	8031
RETAINING WALL "B" WALL REINFORCING DETAILS (PANELS 17 TO 20)	WB11 OF 14	8032
RETAINING WALL "B" WALL REINFORCING DETAILS (PANELS 21 TO 24)	WB12 OF 14	8033
RETAINING WALL "B" WALL SECTIONS AND REINFORCING DETAILS	WB13 OF 14	8034
RETAINING WALL "B" GENERALIZED SOIL PROFILE	WB14 OF 14	8035
RETAINING WALL "C" GENERAL PLAN AND ELEVATION (PANELS 1 TO 16)	WC1 OF 15	8036
RETAINING WALL "C" GENERAL PLAN AND ELEVATION (PANELS 17 TO 32)	WC2 OF 15	8037
RETAINING WALL "C" WALL DETAILS (PANELS 1 TO 4)	WC3 OF 15	8038
RETAINING WALL "C" WALL DETAILS (PANELS 5 TO 8)	WC4 OF 15	8039
RETAINING WALL "C" WALL DETAILS (PANELS 9 TO 20)	WC5 OF 15	8040
RETAINING WALL "C" WALL DETAILS (PANELS 21 TO 24)	WC6 OF 15	8041
RETAINING WALL "C" WALL DETAILS (PANELS 25 TO 28)	WC7 OF 15	8042
RETAINING WALL "C" WALL DETAILS (PANELS 29 TO 32)	WC8 OF 15	8043
RETAINING WALL "C" WALL REINFORCING DETAILS (PANELS 1 TO 4)	WC9 OF 15	8044
RETAINING WALL "C" WALL REINFORCING DETAILS (PANELS 5 TO 8)	WC10 OF 15	8045
RETAINING WALL "C" WALL REINFORCING DETAILS (PANELS 9 TO 20)	WC11 OF 15	8046
RETAINING WALL "C" WALL REINFORCING DETAILS (PANELS 21 TO 24)	WC12 OF 15	8047
RETAINING WALL "C" WALL REINFORCING DETAILS (PANELS 25 TO 28)	WC13 OF 15	8048
RETAINING WALL "C" WALL REINFORCING DETAILS (PANELS 29 TO 32)	WC14 OF 15	8049
RETAINING WALL "C" GENERALIZED SOIL PROFILE	WC15 OF 15	8050

DESCRIPTION OF SHEET	WORKING NO.	SHEET NO.
I-55 SOUTH RETAINING WALLS (CONT.)		
RETAINING WALL "D" GENERAL PLAN AND ELEVATION	WD1 OF 15	8051
RETAINING WALL "D" FOOTING AND WALL DETAILS (PANELS 1 TO 4)	WD2 OF 15	8052
RETAINING WALL "D" FOOTING AND WALL DETAILS (PANELS 5 TO 8)	WD3 OF 15	8053
RETAINING WALL "D" FOOTING AND WALL DETAILS (PANELS 9 TO 12)	WD4 OF 15	8054
RETAINING WALL "D" FOOTING AND WALL DETAILS (PANELS 13 TO 16)	WD5 OF 15	8055
RETAINING WALL "D" FOOTING AND WALL DETAILS (PANELS 17 AND 18)	WD6 OF 15	8056
RETAINING WALL "D" FOOTING AND WALL REINFORCING DETAILS (PANELS 1 TO 4)	WD7 OF 15	8057
RETAINING WALL "D" FOOTING AND WALL REINFORCING DETAILS (PANELS 5 TO 8)	WD8 OF 15	8058
RETAINING WALL "D" FOOTING AND WALL REINFORCING DETAILS (PANELS 9 TO 12)	WD9 OF 15	8059
RETAINING WALL "D" FOOTING AND WALL REINFORCING DETAILS (PANELS 13 TO 16)	WD10 OF 15	8060
RETAINING WALL "D" FOOTING AND WALL REINFORCING DETAILS (PANELS 17 AND 18)	WD11 OF 15	8061
RETAINING WALL "D" WALL SECTIONS AND REINFORCING DETAILS	WD12 OF 15	8062
RETAINING WALL "D" DRAINAGE AND MISC. DETAILS	WD13 OF 15	8063
RETAINING WALL "D" PRESTRESSED CONCRETE PILES	WD14 OF 15	8064
RETAINING WALL "D" GENERALIZED SOIL PROFILE	WD15 OF 15	8065
RETAINING WALL "G" GENERAL PLAN AND ELEVATION (PANELS 1 TO 17)	WG1 OF 17	8066
RETAINING WALL "G" GENERAL PLAN AND ELEVATION (PANELS 18 TO 32)	WG2 OF 17	8067
RETAINING WALL "G" WALL DETAILS (PANELS 1 AND 2)	WG3 OF 17	8068
RETAINING WALL "G" WALL DETAILS (PANELS 3 TO 5)	WG4 OF 17	8069
RETAINING WALL "G" WALL DETAILS (PANELS 6 TO 9)	WG5 OF 17	8070
RETAINING WALL "G" WALL DETAILS (PANELS 10 TO 21)	WG6 OF 17	8071
RETAINING WALL "G" WALL DETAILS (PANELS 22 TO 25)	WG7 OF 17	8072
RETAINING WALL "G" WALL DETAILS (PANELS 26 TO 29)	WG8 OF 17	8073
RETAINING WALL "G" WALL DETAILS (PANELS 30 TO 32)	WG9 OF 17	8074
RETAINING WALL "G" WALL REINFORCING DETAILS (PANELS 1 AND 2)	WG10 OF 17	8075
RETAINING WALL "G" WALL REINFORCING DETAILS (PANELS 3 TO 5)	WG11 OF 17	8076
RETAINING WALL "G" WALL REINFORCING DETAILS (PANELS 6 TO 9)	WG12 OF 17	8077
RETAINING WALL "G" WALL REINFORCING DETAILS (PANELS 10 TO 21)	WG13 OF 17	8078
RETAINING WALL "G" WALL REINFORCING DETAILS (PANELS 22 TO 25)	WG14 OF 17	8079
RETAINING WALL "G" WALL REINFORCING DETAILS (PANELS 26 TO 29)	WG15 OF 17	8080
RETAINING WALL "G" WALL REINFORCING DETAILS (PANELS 30 TO 32)	WG16 OF 17	8081
RETAINING WALL "G" GENERALIZED SOIL PROFILE	WG17 OF 17	8082
RETAINING WALL "P" GENERAL PLAN AND ELEVATION (PANELS 1 TO 18)	WP1 OF 17	8083
RETAINING WALL "P" GENERAL PLAN AND ELEVATION (PANELS 19 TO 37)	WP2 OF 17	8084
RETAINING WALL "P" WALL DETAILS (PANELS 1 TO 3)	WP3 OF 17	8085
RETAINING WALL "P" WALL DETAILS (PANELS 4 TO 6)	WP4 OF 17	8086
RETAINING WALL "P" WALL DETAILS (PANELS 7 TO 14)	WP5 OF 17	8087
RETAINING WALL "P" WALL DETAILS (PANELS 15 TO 18)	WP6 OF 17	8088
RETAINING WALL "P" WALL DETAILS (PANELS 19 TO 30)	WP7 OF 17	8089
RETAINING WALL "P" WALL DETAILS (PANELS 31 TO 34)	WP8 OF 17	8090
RETAINING WALL "P" WALL DETAILS (PANELS 35 TO 37)	WP9 OF 17	8091
RETAINING WALL "P" WALL REINFORCING DETAILS (PANELS 1 TO 3)	WP10 OF 17	8092
RETAINING WALL "P" WALL REINFORCING DETAILS (PANELS 4 TO 6)	WP11 OF 17	8093
RETAINING WALL "P" WALL REINFORCING DETAILS (PANELS 7 TO 14)	WP12 OF 17	8094
RETAINING WALL "P" WALL REINFORCING DETAILS (PANELS 15 TO 18)	WP13 OF 17	8095
RETAINING WALL "P" WALL REINFORCING DETAILS (PANELS 19 TO 30)	WP14 OF 17	8096
RETAINING WALL "P" WALL REINFORCING DETAILS (PANELS 31 TO 34)	WP15 OF 17	8097
RETAINING WALL "P" WALL REINFORCING DETAILS (PANELS 35 TO 37)	WP16 OF 17	8098
RETAINING WALL "P" GENERALIZED SOIL PROFILE	WP17 OF 17	8099

BRIDGE DIVISION REVISIONS		
DATE	SHEET NO.	BY
03-11-16	8192	RJB

NEEL-SCHAFFER
Solutions you can build upon

RANDY BOUDREAUX REGISTERED PROFESSIONAL ENGINEER #11203 STATE OF MISSISSIPPI
DATE: 03/11/16

BY	REVISIONS	DATE

MISSISSIPPI DEPARTMENT OF TRANSPORTATION

DETAILED INDEX (BRIDGE)

PROJECT 106023-309000 IM-0055-02(246)

HINDS COUNTY

DESIGNER Randy Boudreaux, P.E. CHECKER Kevin J. Kennedy, P.E.
DETAILER Randy Boudreaux, P.E. ISSUE DATE
DIRECTOR OF STRUCTURES, STATE BRIDGE ENGINEER - JUSTIN WALKER PE.
DEP. DIRECTOR OF STRUCTURES, ASSIST. STATE BRIDGE ENGINEER - SCOTT WESTERFIELD PE.

WORKING NUMBER DI-BR

SHEET NUMBER 8001

FILE: S:\Projects\12125.011 I-55 Byram to McDowell Project 2\Drawings\12125-0.1-DI-BR.dgn
DATE: 3/8/2016 TIME: 1:26:33 PM USER: MWP

ADDENDUM

STATE	PROJECT NO.
MISS.	IM-0055-02(246)

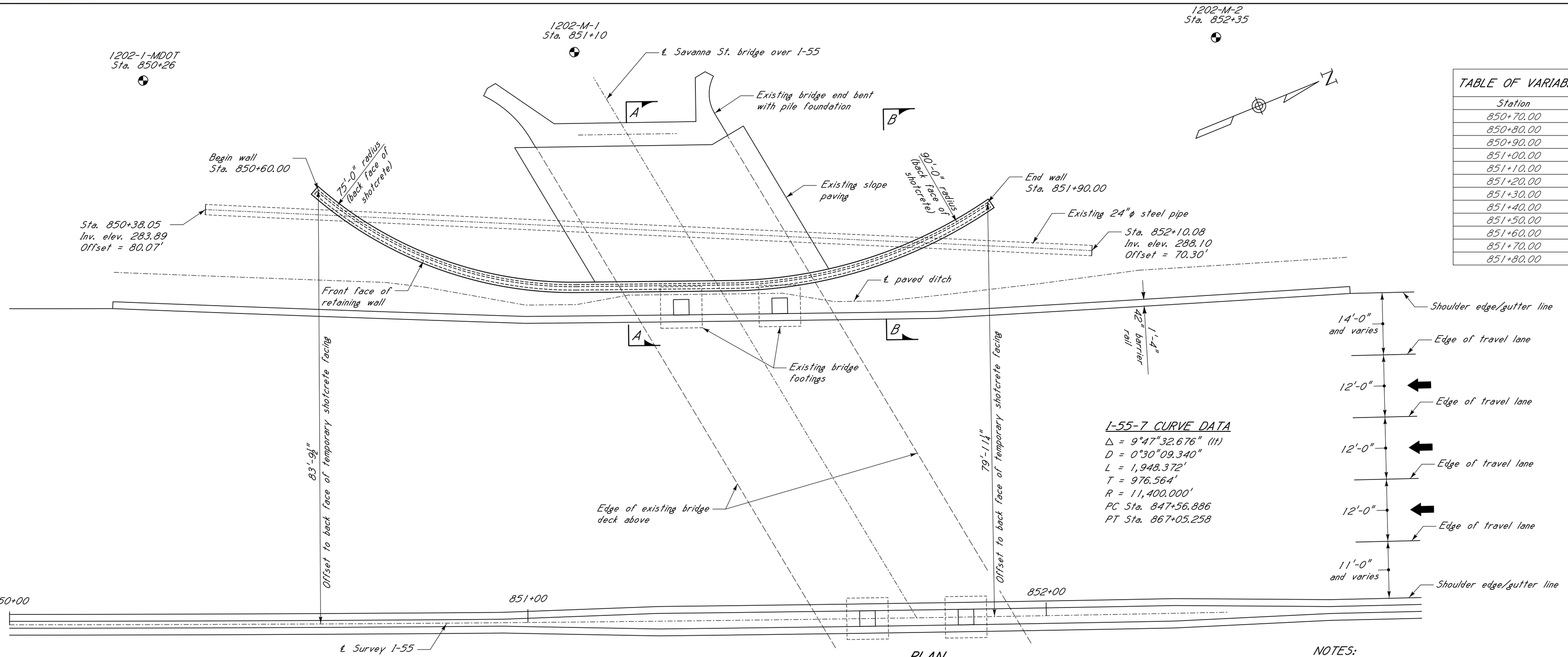

TABLE OF VARIABLE WALL OFFSETS	
Station	Offset
850+70.00	76'-5¼"
850+80.00	71'-3"
850+90.00	67'-1¼"
851+00.00	65'-1¼"
851+10.00	65'-1¼"
851+20.00	65'-1¼"
851+30.00	65'-1¼"
851+40.00	65'-1¼"
851+50.00	65'-7¾"
851+60.00	67'-3¾"
851+70.00	70'-1¾"
851+80.00	74'-3½"

I-55-7 CURVE DATA

Δ = 9°47"32.676" (lt)
D = 0°30"09.340"
L = 1,948.372'
T = 976.564'
R = 11,400.000'
PC Sta. 847+56.886
PT Sta. 867+05.258

PLAN

Scale: 1" = 10'-0"

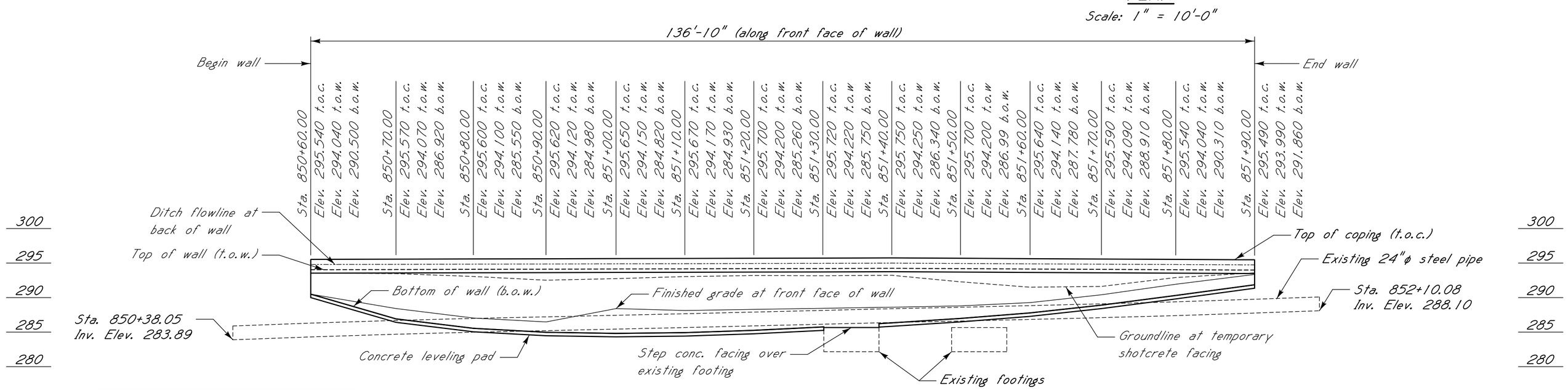

ELEVATION

Scale: 1" = 10'-0"

ESTIMATED QUANTITIES		
Item / Location	Soil Nail Retaining Walls S.F.	Soil Nail Verification Tests Ea.
M	1,252.00	5
Totals	1,252.00	5

NOTES:

For GENERAL NOTES, see sheet no. WGN1.
For Section A-A, see sheet no. WM2.
For Section B-B, see sheet no. WM3.
For the GENERALIZED SOIL PROFILE, see sheet no. WM5.
Stations are along I-55 and offsets are given to back face of the wall.
All longitudinal dimensions are along back face of wall.

DESIGN DATA:

Specifications . . . . . A.A.S.H.T.O., 2006
△1 Soil nail design . . . . . ASD per FHWA0-IF-03-017
Weight of earth fill . . . . . 125 pcf
Live load surcharge. . . . . 250 psf
Concrete . . . . . Class "AA" (4,000 psi)
Shotcrete . . . . . 4,000 psi
Soil nail grout . . . . . 3,000 psi
Reinforcing . . . . . A.S.T.M. A615 Grade 60

LEGEND:

1201-3-MDOT Sta. 879+00 — Soil boring location.
t.o.c. = Top of coping
t.o.w. = Top of wall
b.o.w. = Bottom of wall

NEEL-SCHAFFER
Solutions you can build upon

RANDY BOUDREAUX REGISTERED PROFESSIONAL ENGINEER #11203 STATE OF MISSISSIPPI
DATE: 03/11/16

DATE	REVISIONS	BY
03-11-15	Added specification	R.JB

MISSISSIPPI DEPARTMENT OF TRANSPORTATION
RETAINING WALL "M"

GENERAL PLAN AND ELEVATION
(SOIL NAIL WALL)

PROJECT 106023-309000
IM-0055-02(246)

HINDS COUNTY

DESIGNER Brad Campbell, P.E. CHECKER Randy Boudreaux, P.E.
DETAILER Leo A. Culcliff, III, P.E. ISSUE DATE
DIRECTOR OF STRUCTURES, STATE BRIDGE ENGINEER - JUSTIN WALKER PE.
DEP. DIRECTOR OF STRUCTURES, ASSIST. STATE BRIDGE ENGINEER - SCOTT WESTERFIELD PE.

WORKING NUMBER WM1 OF 7
SHEET NUMBER 8192

FILE: S:\Projects\12125.011 I-55 Byram to McDowell Project 2\Drawings\Wall M\12125-WM1-Plan and Elevation.dgn
DATE: 3/8/2016 TIME: 1:27:13 PM USER: MWP