MDOT Use Only
Checked _____
Loaded _____
Keyed _____

09 -

SM No. CSP0303000121

PROPOSAL AND CONTRACT DOCUMENTS

FOR THE CONSTRUCTION OF

09
Upgrade and Repair of SR 552, known as State Project No. SP-0303-00(012) / 107179301 in Claiborne County.

Project Completion: 11/18/2016

(STATE DELEGATED)

NOTICE

BIDDERS MUST PURCHASE A BID PROPOSAL FROM MDOT CONTRACT ADMINISTRATION DIVISION TO BID THIS PROJECT.

Electronic addendum updates will be posted on www.gomdot.com

SECTION 900

OF THE CURRENT
2004 STANDARD SPECIFICATIONS
FOR ROAD AND BRIDGE CONSTRUCTION

JACKSON, MISSISSIPPI

MISSISSIPPI DEPARTMENT OF TRANSPORTATION
TABLE OF CONTENTS

PROJECT: SP-0303-00(012)/107179301 - Claiborne

Section 901 - Advertisement

Section 904 - Notice to Bidders

#1	Governing Specifications
#3	Final Cleanup
#640	Fiber Reinforced Concrete
#1405	Errata & Modifications to 2004 Standard Specifications
#1928	Federal Bridge Formula
#2382	Status of ROW, w/ Attachments
#3131	Temporary Traffic Paint
#3581	Storm Water Discharge Associated with Construction Activity (> 5 Acres)
#3612	Additional Erosion Control Requirements
#3704	Use of Precast Drainage Units
#3893	Petroleum Products Base Price
#4214	Safety Apparel
#4473	Alternate Crushed Stone Base Bid Items
#4526	Electronic Addendum Process
#4565	Manual on Uniform Traffic Control Devices (MUTCD)
#5044	Questions Regarding Bidding
#5053	Contractor Correspondence
#5405	Traffic Control Devices
#5412	Weight Limits
#5545	Burn-in Period
#5824	Adjustments for Bituminous Materials
#5865	Non-Quality Control / Quality Assurance Concrete
#5866	Payroll Requirements
#6081	Contract Time
#6082	Erosion Control Plan Submittal
#6083	Milestone Date

Section 907 - Special Provisions

907-101-4	Definitions
907-102-12	Bidding Requirements and Conditions
907-103-11	Award and Execution
907-104-5	Scope of Work
907-104-6	Partnering Process
907-105-8	Control of Work
907-107-13	Legal Relations and Responsibility to Public, w/Supplement
907-107-14	Contractor's Protection Plan, w/ Supplement
907-108-37	Prosecution and Progress, w/ Supplement
907-109-8	Measurement and Payment
907-216-1	Solid Sodding
907-225-5	Grassing
907-227-10	Hydroseeding

907-228-2	Erosion Control Blankets
907-230-11	Tree and Shrub Planting
907-233-1	Tree Bark Mulch
907-234-5	Siltation Barriers
907-237-4	Wattles
907-240-2	Interlocking Flexible Block Erosion Control System
907-246-3	Sandbags & Rockbags
907-249-1	Riprap for Erosion Control
907-258-9	Miscellaneous Site Amenities
907-262-2	Santitary Sewer System
907-265-5	Potable Water System
907-304-13	Granular Courses
907-401-7	Asphalt Pavements
907-403-14	Asphalt Pavements
907-406-4	Cold Milling
907-407-2	Tack Coat
907-501-6	Portland Cement Concrete Pavement
907-601-1	Structural Concrete
907-618-9	Placement of Temporary Traffic Stripe
907-618-13	Temporary Construction Signs
907-625-6	Painted Traffic Markings – Blue-ADA
907-626-25	Thermoplastic Traffic Markings
907-681-2	Submittal Data
907-682-14	RV Campground Electrical Pedestals
907-683-12	Light Emitting Diode (LED) Luminaires
907-699-5	Construction Stakes
907-701-5	Hydraulic Cement, w/ Supplement
907-702-5	Specifications for Bituminous Materials
907-703-12	Aggregates, w/ Supplement
907-708-6	Non-Metal Drainage Structures
907-710-1	Fast Dry Solvent Traffic Paint
907-711-4	Synthetic Structural Fiber Reinforcement
907-713-5	Admixtures for Concrete
907-714-8	Miscellaneous Materials
907-715-4	Roadside Development Materials
907-720-2	Pavement Marking Materials
907-723-2	Light Emitting Diode (LED) Luminaires
907-804-19	Concrete Bridges and Structures
907-815-2	Sediment Control Stone

Section 905 - Proposal, Proposal Bid Items, Combination Bid Proposal
State Board of Contractors Requirement
State Certification Regarding Non-Collusion, Debarment and Suspensions
Section 902 - Contract Form
Section 903 - Contract Bond Forms

PROJECT: SP-0303-00(012)/107179301 - Claiborne

(REVISIONS TO THE ABOVE WILL BE INDICATED ON THE SECOND SHEET
OF SECTION 905 AS ADDENDA)

02/25/2016 11:12 AM

MISSISSIPPI DEPARTMENT OF TRANSPORTATION

SECTION 901 - ADVERTISEMENT

Electronic bids will be received by the Mississippi Transportation Commission at 10:00 o'clock A.M., Tuesday, March 22, 2016, from the Bid Express Service and shortly thereafter publicly read on the Sixth Floor for:

Upgrade and Repair of SR 552, known as State Project No. SP-0303-00(012) / 107179301 in Claiborne County.

The attention of bidders is directed to the predetermined minimum wage rate set by the U. S. Department of Labor under the Fair Labor Standards Act.

The Mississippi Department of Transportation hereby notifies all bidders that it will affirmatively insure that in any contract entered into pursuant to this advertisement, disadvantaged business enterprises will be afforded full opportunity to submit bids in response to this invitation and will not be discriminated against on the grounds of race, color, sex, age, disability, religion or national origin in consideration for an award.

Plans and specifications are on file in the offices of the Mississippi Department of Transportation.

Bid proposals must be purchased online at <https://shopmdot.ms.gov>. Specimen proposals may be viewed and downloaded online at no cost at <http://mdot.ms.gov> or purchased online. Proposals are available at a cost of Ten Dollars ($10.00) per proposal plus a small convenience fee. Cash or checks will not be accepted as payment.

Plans must be purchased online at <https://shopmdot.ms.gov>. Costs of plans will be on a per sheet basis plus a small convenience fee. If you have any questions, you can contact the MDOT Plans Print Shop at (601) 359-7460, or e-mail at plans@mdot.state.ms.us. Plans will be shipped upon receipt of payment. Cash or checks will not be accepted as payment.

Bid bond, signed or countersigned by a Mississippi Agent or Qualified Nonresident Agent, with Power of Attorney attached, a Cashier's check or Certified Check for five (5%) percent of bid, payable to STATE OF MISSISSIPPI, must accompany each proposal.

The attention of bidders is directed to the provisions of Subsection 102.07 pertaining to irregular proposals and rejection of bids.

MELINDA L. MCGRATH
EXECUTIVE DIRECTOR

MISSISSIPPI DEPARTMENT OF TRANSPORTATION

SECTION 904 - NOTICE TO BIDDERS NO. 1 **CODE: (IS)**

DATE: **05/03/2004**

SUBJECT: **Governing Specifications**

The current (2004) Edition of the Standard Specifications for Road and Bridge Construction adopted by the Mississippi Transportation Commission is made a part hereof fully and completely as if it were attached hereto, except where superseded by special provisions, or amended by revisions of the Specifications contained herein. Copies of the specification book may be purchased from the MDOT Construction Division.

A reference in any contract document to controlling requirements in another portion of the contract documents shall be understood to apply equally to any revision or amendment thereof included in the contract.

In the event the plans or proposal contain references to the 1990 Edition of the Standard Specifications for Road and Bridge Construction, it is to be understood that such references shall mean the comparable provisions of the 2004 Edition of the Standard Specifications.

MISSISSIPPI DEPARTMENT OF TRANSPORTATION

SECTION 904 - NOTICE TO BIDDERS NO. 3 **CODE: (SP)**

DATE: **05/03/2004**

SUBJECT: **Final Clean-Up**

Immediately prior to final inspection for release of maintenance, the Contractor shall pick up, load, transport and properly dispose of all litter from the entire highway right-of-way that is within the termini of the project.

Litter shall include, but not be limited to, solid wastes such a glass, paper products, tires, wood products, metal, synthetic materials and other miscellaneous debris.

Litter removal is considered incidental to other items of work and will not be measured for separate payment.

MISSISSIPPI DEPARTMENT OF TRANSPORTATION

SECTION 904 - NOTICE TO BIDDERS NO. 640 **CODE: (IS)**

DATE: 09/26/2005

SUBJECT: Fiber Reinforced Concrete

Bidders are hereby advised that synthetic structural fibers meeting the requirements of Subsection 907-711.04 may be used in lieu of wire mesh in some items of construction. Substitution of fibers for wire mesh will be allowed in the construction of paved ditches, paved flumes, paved inlet apron, driveways, guard rail anchors and pile encasements. Substitution in any other items of work must be approved by the State Construction Engineer prior to use.

MISSISSIPPI DEPARTMENT OF TRANSPORTATION

SECTION 904 - NOTICE TO BIDDERS NO. 1405 **CODE: (IS)**

DATE: 03/15/2007

SUBJECT: ERRATA AND MODIFICATIONS TO THE 2004 STANDARD SPECIFICATIONS

Page	Subsection	Change
101	201.01	In the second sentence of the first paragraph, change “salvable” to “salvageable”.
107	202.04	In the fourth sentence of the fourth paragraph, change “yard” to “feet”.
107	202.05	In the list of units measurements for 202-B, add “square foot”.
132	211.03.4	In the second sentence of the second paragraph, change “planted” to “plated”.
192	306.02.4	In the first line of the first paragraph, delete the word “be”.
200	307.03.7	In the fourth sentence of the second paragraph, change “lime-fly ash” to “treated”.
236	401.01	Change the header from “Section 403” to “Section 401”.
242	401.02.3.2	In the first sentence of the third full paragraph, add “1/8” in the blank before the inch mark.
250	401.02.6.3	In the second sentence of the first paragraph on page 250, change “rutting over ” ” to “rutting over 1/8" ”.
253	401.02.6.4.2	In the paragraph preceding the table, change “91.0” to “89.0”.
259	401.03.1.4	In the first paragraph, change “92.0 percent” to “the specified percentage (92.0 or 93.0)”.
269	403.03.2	In the table at the top of page 269, change the PI requirement from “ = ” to “ $\leq$ ”.

278	404.04	In the second sentence, change the subsection from "401.04" to "403.04".
283	409.02.2	Change "PG 64-22" to "PG 67-22".
294	413.02	In the first sentence of the second paragraph, change "707.02.1.3" to "Subsection 707.02.1.3".
340	511.04	In the second sentence of the second paragraph, change "412" to "512".
349	601.03.3	In the first sentence, change "804.03.2" to "804.03.5".
355	603.02	Change the subsection reference for Joint mortar from "707.03" to "714.11".
369	604.04	In the first sentence, change "601.04" to "Subsection 601.04".
427	619.04	Delete the second paragraph.
442	625.04	In the third paragraph, change "626.04" to "Subsection 626.04".
444	626.03.1.2	Delete the third sentence of the first paragraph.
464	631.02	Change the subsection reference for Water from "714.01.0" to "714.01.1".
570	682.03	Change the subsection number from "682-03" to "682.03".
575	683.10.4	Change the subsection number from "683.10.4" to "683.04".
575	683.10.5	Change the subsection number from "683.10.5" to "683.05".
596	701.02	In the table under the column titled "Cementations material required", change "Class F, FA" to "Class F FA,".
603	702.11	In the first sentence, change "702.12" to "Subsection 702.12".
612	703.04.2	In the fifth paragraph, delete "Subsection 703.11 and".
616	703.07.2	In the Percentage By Weight Passing Square Mesh Sieves table, change the No. 10 requirement for Class 7 material from "30 - 10" to "30 - 100".

618	703.13.1	In the first sentence of the first paragraph, change "703.09" to "703.06".
618	703.13.2	In the first sentence, change "703.09" to "703.06".
671	712.06.2.2	In the first sentence, change "712.05.1" to "Subsection 712.05.1".
689	714.11.2	In the first sentence, change "412" to "512".
709	715.09.5	In the first sentence of the first paragraph, change "guage" to "gauge".
717	717.02.3.4	In the top line of the tension table, change "1 1/2" to "1 1/8" and change "1 1/8" to "1 1/2".
741	720.05.2.2	In the last sentence of this subsection, change "720.05.2.1" to "Subsection 720.05.2.1".
827	803.03.2.3.7.5.2	In the first sentence of the second paragraph, change "803.03.5.4" to "803.03.2.3.4".
833	803.03.2.6	In the first sentence, change "803.03.7" to "803.03.2.5".
854	804.02.11	In the last sentence of the first paragraph, change "automatically" to "automatic".
859	804.02.13.1.3	In the last sentence, change Subsection "804.02.12.1" to "804.02.12".
879	804.03.19.3.2	In the first sentence of the third paragraph, change "listed on of Approved" to "listed on the Approved".
879	804.03.19.3.2	In the last sentence of the last paragraph, change "804.03.19.3.1" to "Subsection 804.03.19.3.1".
962	814.02.3	In the first sentence, change "710.03" to "Subsection 710.03".
976	820.03.2.1	In the first sentence, change "803.02.6" to "803.03.1.7".
976	820.03.2.2	In the first sentence, change "803.03.9.6" to "803.03.1.9.2".
985	Index	Change the subsection reference for Petroleum Asphalt Cement from "702.5" to "702.05".

985	Index	Change the subsection reference for the Definition of Asphaltic Cement or Petroleum Asphalt from "700.2" to "700.02".
985	Index	Change the subsection reference for Automatic Batchers from "501.03.2.4" to "804.02.10.4".
986	Index	Delete "501.03.2" as a subsection reference for Batching Plant & Equipment.
988	Index	Change the subsection reference for the Central Mixed Concrete from "501.03.3.2" to "804.02.11".
988	Index	Change the subsection reference for the Concrete Batching Plant & Equipment from "501.03.2" to "804.02.11".
999	Index	Delete "501.03.3.3" as a subsection reference for Truck Mixers.
1001	Index	Change the subsection reference for Edge Drain Pipes from "605.3.5" to "605.03.5".
1002	Index	Change the subsection reference for Metal Posts from "713.05.2" to "712.05.2".
1007	Index	Change the subsection reference for Coarse Aggregate of Cement Concrete Table from "703.3" to "703.03".
1007	Index	Change the subsection reference for Composite Gradation for Mechanically Stabilized Courses Table from "703.8" to "703.08".
1009	Index	Delete "501.03.3.3" as a subsection reference for Truck Mixers and Truck Agitators.
1010	Index	Delete reference to "Working Day, Definition of".

MISSISSIPPI DEPARTMENT OF TRANSPORTATION

SECTION 904 - NOTICE TO BIDDERS NO. 1928 **CODE: (IS)**

DATE: **04/14/2008**

SUBJECT: **Federal Bridge Formula**

Bidders are hereby advised that Federal Highway Administration Publication No. FHWA-MC-94-007, **BRIDGE FORMULA WEIGHTS**, dated January 1994, is made a part of this contract when applicable.

Prior to the preconstruction conference, the Contractor shall advise the Engineer, in writing, what materials, if any, will be delivered to the jobsite via Interstate route(s).

Copies of the **BRIDGE FORMULA WEIGHTS** publication may be obtained by contacting:

Federal Highway Administration
400 7th Street, SW
Washington, DC 20590
(202) 366-2212

or

http://ops.fhwa.dot.gov/freight/sw/brdgcalc/calc_page.htm

MISSISSIPPI DEPARTMENT OF TRANSPORTATION

SECTION 904 - NOTICE TO BIDDERS NO. 2382 **CODE: (IS)**

DATE: **02/12/2009**

SUBJECT: **Status of Right-of-Way**

Although it is desirable to have acquired all rights-of-way and completed all utility adjustments and work to be performed by others prior to receiving bids, sometimes it is not considered to be in the public interest to wait until each and every such clearance has been obtained. The bidder is hereby advised of possible unacquired rights-of-way, relocatees and utilities which have not been completed.

The status of right-of-way acquisition, utility adjustments, encroachments, potentially contaminated sites and asbestos containation are set forth in the following attachments.

In the event right of entry is not available to ALL parcels of right-of-way and/or all work that is to be accomplished by others on the date set forth in the contract for the Notice to Proceed is not complete, the Department will issue a restricted Notice to Proceed.

STATUS OF RIGHT-OF-WAY
SP-0303-00(012)
107179-301000
CLAIBORNE COUNTY
February 11, 2016

All necessary rights of way have been acquired or legal rights of entry obtained, **except:**

The west connection ramp is restricted until March 15 due to relocation of utilities.

ASBESTOS CONTAMINATION STATUS OF BUILDINGS
TO BE REMOVED BY THE CONTRACTOR
SP-0303-00(012)
107179-301000
Claiborne County
January 6, 2016

Reference is made to notices to bidders entitled "Asbestos National Emission Standards for Hazardous Air Pollutants (NESHAP)" and "Removal of Obstructions".

The following pertinent information is furnished concerning asbestos containing materials (ACMs), if any, found in buildings to be removed by the Contractor.

There is no Right of Way required for this project. There are no buildings to be removed by the contractor.

STATUS OF POTENTIALLY CONTAMINATED SITES
SP-0303-00(012)
107179-301000
Claiborne County
January 6, 2016

THERE IS NO RIGHT OF WAY REQUIRED FOR THIS PROJECT. NO INITIAL SITE ASSESSMENT WILL BE PERFORMED. IF CONTAMINATION ON EXISTING RIGHT OF WAY IS DISCOVERED, IT WILL BE HANDLED BY THE DEPARTMENT.

RAILROAD STATUS REPORT

SP-0303-00(012) / 107179

301000

CLAIBORNE COUNTY(IES)

January 27, 2016

There are no railroad facilities affected by the above referenced project.

ENCROACHMENT CERTIFICATION

SP-0303-00(012) / 107179

301000

CLAIBORNE COUNTY(IES)

January 27, 2016

This is to certify that the above captioned project has been inspected and no encroachments were found.

UTILITY STATUS REPORT
SP-0303-00(012) / 107179
301000
CLAIBORNE COUNTY(IES)
January 27, 2016

This is to certify that the above captioned project has been inspected, and there is one known utitity in conflict with the project.

AT&T (855-637-6471) has one communication line that is in conflict in the area of the passenger car parking lot. This affects the construction of the west connection ramp of the parking lot. No work will be done on this ramp until the utility is relocated.

Forty-eight hours prior to commencing any excavation, the Contractor is advised to call MS-One-Call at 1-800-227-6477.

MISSISSIPPI DEPARTMENT OF TRANSPORTATION

SECTION 904 - NOTICE TO BIDDERS NO. 3131 **CODE: (SP)**

DATE: **06/24/2010**

SUBJECT: **Temporary Traffic Paint**

Bidders are hereby advised that the temporary traffic paint for this project can be waterborne paint as specified in the 2004 Mississippi Standard Specifications For Road and Bridge Construction or fast dry solvent traffic paint meeting the requirements set out in 907-710-1 (Fast Dry Solvent Traffic Paint).

Payment for all temporary traffic paint shall be paid under the appropriate 619 pay items.

When using fast dry solvent traffic stripe, no paint can be sprayed or placed on the ground during set-up or clean-up.

MISSISSIPPI DEPARTMENT OF TRANSPORTATION

SECTION 904 - NOTICE TO BIDDERS NO. 3581 **CODE: (SP)**

DATE: **6/10/2011**

SUBJECT: **Storm Water Discharge Associated with Construction Activity (≥ 5 Acres)**

PROJECT: **SP-0303-00(012) / 107179301 – Claiborne County**

A Construction Storm Water General NPDES Permit to discharge storm water associated with construction activity is required.

The Department has acquired Certificate of Permit Coverage MSR107113 under the Mississippi Department of Environmental Quality's (MDEQ) Storm Water Large Construction General Permit. Projects issued a certificate of permit coverage are granted permission to discharge treated storm water associated with construction activity into State waters. Copies of said permit, completed Large Construction Notice of Intent (LCNOI), and Storm Water Pollution Prevention Plan (SWPPP) are on file with the Department.

Prior to the execution of the contract, the successful bidder shall execute and deliver to the Executive Director an original signed copy of the completed Prime Contractor Certification Forms.

Failure of the bidder to execute and file the completed Prime Contractor Certification Forms shall be just cause for the cancellation of the award.

The executed Prime Contractor Certification Forms shall be prima facie evidence that the bidder has examined the permit, is satisfied as to the terms and conditions contained therein, and that the bidder has the primary responsibility for meeting all permit terms including, but not limited to, the inspection and reporting requirements. For this project, the Contractor shall furnish, set up and read, as needed, an on-site rain gauge.

The Contractor shall make inspections in accordance with condition No. S-4, page 22, and shall furnish the Project Engineer with the results of each weekly inspection as soon as possible following the date of inspection. A copy of the inspection form is provided with the packet. The weekly inspections must be documented monthly on the Inspection and Certification Form. The Contractor's representative and the Project Engineer shall jointly review and discuss the results of the inspections so that corrective action can be taken. The Project Engineer shall retain copies of the inspection reports.

The Engineer will have the authority to suspend all work and/or withhold payments for failure of the Contractor to carry out provisions of MDEQ's Storm Water Construction General Permit, the erosion control plan, updates to the erosion control plan, and /or proper maintenance of the BMPs

Upon successful completion of all permanent erosion and sediment controls, accepted and documented by the full maintenance release, the Construction Division shall submit a completed Request for Termination (RFT) of Coverage to the Office of Pollution Control.

Securing a permit (s) for storm water discharge associated with the Contractor's activity on any other regulated area the Contractor occupies, shall be the responsibility of the Contractor.

MISSISSIPPI DEPARTMENT OF TRANSPORTATION

SECTION 904 - NOTICE TO BIDDERS NO. 3612 **CODE: (SP)**

DATE: 08/10/2011

SUBJECT: Additional Erosion Control Requirements

Bidders are hereby advised of the following requirements that relate to erosion control activities on the project.

THE MAXIMUM TOTAL ACREAGE THAT CAN BE DISTURBED, AT ONE TIME, ON THE PROJECT IS NINETEEN (19) ACRES. THE CONTRACTOR SHALL BE REQUIRED TO STABILIZE DISTURBED AREAS PRIOR TO OPENING UP ADDITIONAL SECTIONS OF THE PROJECT. STABILIZED SHALL BE WHEN THE DISTURBED AREA MEETS ONE OF THE FOLLOWING CRITERIA:

- **THE AREA HAS BEEN GRASSED, EITHER TEMPORARY OR PERMANENT, AND MULCHED ACCORDING TO THE SPECIFICATIONS,OR**
- **A CRUSHED STONE COURSE OR A LIFT OF ASPHALT PAVEMENT HAS BEEN PLACED, OR**
- **THE AREA HAS BEEN CHEMICALLY TREATED USING PORTLAND CEMENT OR LIME-FLY ASH, AND SEALED.**

DISTURBED AREAS INCLUDE THE ROADBED, SLOPES AND REMAINING AREA OUT TO THE ROW LINE.

Clearing and Grubbing: Prior to beginning any clearing and grubbing operations on the project, controls shall be in place to address areas such as drainage structures, wetlands, streams, steep slopes and any other sensitive areas as directed by the Engineer. Clearing and grubbing should be limited to the minimum area necessary to construct the project. Grubbing operations should be minimized in areas outside the construction limits and stumps should be cut off flush with the existing ground elevations. A buffer area of at least fifteen (15) feet shall be in place adjacent to the right-of-way line and at least five (5) feet adjacent to stream banks. The buffer area can either be the existing vegetation that is left undisturbed or re-established by planting new vegetation if clearing and grubbing was required.

Unclassified Excavation: Cut sections shall be graded in accordance with the typical sections and plan grades. Permanent erosion control BMP's should be placed as soon as possible after the cut material has been moved. Fill sections that are completed shall have permanent erosion control BMP's placed. Fill sections that are not completed will be either permanently or temporarily grassed until additional material is made available to complete these sections. All unclassified excavation on the project will still be required to be moved prior to incorporating any borrow excavation on the project. The contractor may have to stockpile unclassified excavation in order to comply with the nineteen (19) acre requirement. No additional compensation will be made for stockpiling operations.

Disturbed areas that remain inactive for a period of more than fourteen (14) days shall be temporary grassed and mulched. Temporary grassing and mulching shall only be paid one time for a given area.

MISSISSIPPI DEPARTMENT OF TRANSPORTATION

SECTION 904 - NOTICE TO BIDDERS NO. 3704 **CODE: (SP)**

DATE: **11/30/2011**

SUBJECT: **Use of Precast Drainage Units**

Bidders attention is brought to the content of Subsection 601.02.3 regarding precast units. MDOT Drawing Sheet Nos. PCU-1 and PCU-2 address MDOT approved precast drainage units. The Contractor must make a request to the Project Engineer for approval to use precast units other than the ones shown on Drawing Sheet No. PCU-1 or PCU-2.

Bidders are advised that precast drainage unit tops are only allowed on units shown on Drawing Sheet No. PCU-1. Cast-In-Place drainage unit tops are required on units shown on Drawing Sheet No. PCU-2.

MISSISSIPPI DEPARTMENT OF TRANSPORTATION

SECTION 904 - NOTICE TO BIDDERS NO. 3893 **CODE: (SP)**

DATE: **04/10/2012**

SUBJECT: **Petroleum Products Base Prices**

Bidders are advised that monthly petroleum products base prices will be available at the web site listed below. Current monthly prices will be posted to this web site on or before the 15th of each month. Bidders are advised to use the petroleum base prices on this web site when preparing their bids. The current monthly petroleum products base prices will be acknowledged by the Bidder and become part of the contract during the execution process.

Monthly Petroleum Products Base Prices can be viewed at:

http://sp.gomdot.com/Contract%20Administration/BidSystems/Pages/letting%20calendar.aspx

MISSISSIPPI DEPARTMENT OF TRANSPORTATION

SECTION 904 - NOTICE TO BIDDERS NO. 4214 **CODE: (IS)**

DATE: 11/29/2012

SUBJECT: Safety Apparel

Bidders are advised that the Code of Federal Regulations CFR 23 Part 634 final rule was adopted November 24, 2006 with an effective date of November 24, 2008. This rule requires that "All workers within the right-of-way of a Federal-Aid Highway who are exposed either to traffic (vehicles using the highway for the purposes of travel) or to construction equipment within the work area shall wear high-visibility safety apparel". High-visibility safety apparel is defined in the CFR as "personnel protective safety clothing that is intended to provide conspicuity during both daytime and nighttime usage, and that meets the Performance Class 2 or 3 requirements of the ANSI/ISEA 107-2004 publication entitled American National Standard for High-Visibility Safety Apparel and Headwear". All workers on Mississippi State Highway right-of-way shall comply with this Federal Regulation. Workers are defined by the CFR as "people on foot whose duties place them within the right-of way of a Federal-Aid Highway, such as highway construction and maintenance forces, survey crews, utility crews, responders to incidents within the highway right-of-way, and law enforcement personnel when directing traffic, investigating crashes, and handling lane closures, obstructed roadways, and disasters within the right-of-way of a Federal-Aid Highway".

More information regarding high visibility safety apparel can be found at the following sites.

http://www.gpo.gov/fdsys/pkg/CFR-2008-title23-vol1/pdf/CFR-2008-title23-vol1-sec634-1.pdf

http://ops.fhwa.dot.gov/wz/resources/policy.htm#hv

MISSISSIPPI DEPARTMENT OF TRANSPORTATION

SECTION 904- NOTICE TO BIDDERS NO. 4473 **CODE: (SP)**

DATE: **04/08/2013**

SUBJECT: **Alternate Crushed Stone Base Bid Items**

Bidders are advised that the Crushed Stone Base used on this project will be bid as an alternate pay item: ¾-inch and Down Crushed Stone Base, Size 825B Crushed Stone Base, or Size 610 Crushed Stone Base. Bidders must select one of the alternates at the time of bid. **The Contractor must use the selected crushed stone base throughout the entire project.**

MISSISSIPPI DEPARTMENT OF TRANSPORTATION

SECTION 904 - NOTICE TO BIDDERS NO. 4526 **CODE: (SP)**

DATE: 06/11/2013

SUBJECT: Electronic Addendum Process

Bidders are advised that hard copies of any addenda for this project will no longer be mailed to prospective bidders. All addenda for this project will be posted to the mdot.ms.gov webpage under the Proposal Addenda column for the current letting and appropriate call number. Bidders will have to download addenda from the webpage and process the addenda in the same manner as previous lettings. Addenda will be posted by 10:00 a.m. on Friday prior to the letting. It will be the Bidder's responsibility to check and see if any addenda have been posted for this project. Any questions regarding the downloading process of the addenda shall be directed to the Contract Administration Division at 601-359-7700. Any questions regarding the content of the addenda shall be submitted as a question in accordance with the Notice To Bidders entitled "Questions Regarding Bidding".

MISSISSIPPI DEPARTMENT OF TRANSPORTATION

SECTION 904 - NOTICE TO BIDDERS NO. 4565 **CODE: (SP)**

DATE: **06/27/2013**

SUBJECT: **Manual on Uniform Traffic Control Devices**

Any reference in the Standard Specifications or contract documents to a particular Section of the Manual on Uniform Traffic Control Devices (MUTCD) it shall mean that Section of the latest version of the Manual on Uniform Traffic Control Devices.

MISSISSIPPI DEPARTMENT OF TRANSPORTATION

SECTION 904 - NOTICE TO BIDDERS NO. 5044 **CODE: (SP)**

DATE: 05/13/2014

SUBJECT: Questions Regarding Bidding

Bidders are advised that all questions that arise regarding the contract documents (proposal) or plans on this project shall be directed to the www.gomdot.com current letting webpage. Click on the call number for this project to open an email form to submit your question. Questions must be submitted by 8:00 a.m. on the day prior to the letting. Answers to questions will be posted by 6:00 p.m. on the day prior to the letting. Answers can be viewed by clicking on Q&A link under the Proposal Addenda column.

It shall be the Bidders responsibility to familiarize themselves with the questions and answers that have been submitted on this project. Bidders are advised that by signing the contract documents for this project, they agree that the on-line Questions and Answers submitted on this project shall be added to and made part of the official contract.

MISSISSIPPI DEPARTMENT OF TRANSPORTATION

SECTION 904 - NOTICE TO BIDDERS NO. 5053 **CODE: (SP)**

DATE: 06/03/2014

SUBJECT: Contractor Correspondence

Bidders are advised that all correspondence concerning this project, other than correspondence related to the execution of the contract and sub-contracting, shall be sent to the Project Engineer. The Project Engineer will then forward any necessary correspondence to the appropriate Division. This includes general correspondence, submittals, shop drawings, requests for advancement of materials, etc.

MISSISSIPPI DEPARTMENT OF TRANSPORTATION

SECTION 904 - NOTICE TO BIDDERS NO. 5405 **CODE: (SP)**

DATE: 02/11/2015

SUBJECT: Traffic Control Devices

Bidders are advised of the following two changes regarding traffic control devices.

Flashing Arrow Panels

In Subsection 619.02.5 of the Standard Specifications, it states that flashing arrow panels shall meet the requirements of Section 6F.53 of the MUTCD. The new MUTCD has changed this reference to Section 6F.61. Flashing arrow panels on this project must meet the requirements of Section 6F.61 of the latest MUTCD.

Type III Barricade Rails

The use of 2-inch nominal thickness timber for rails on Type III barricades has not been approved by NCHRP as a crashworthy device. Therefore, the use of 2-inch nominal thickness timbers will not be allowed for rails on Type III Barricades. Timber rails for Type III Barricades shall be as follows.

- For barricades up to four feet (4') wide, the maximum thickness of timber rails shall be one inch (1") and the material shall be pine timber or ¾-inch ACX plywood.

- For barricades more than four feet (4') wide, timber rails shall be constructed of ¾-inch ACX plywood.

A list of crashworthy Type III Barricades can be found at the below FHWA website.

http://safety.fhwa.dot.gov/roadway_dept/policy_guide/road_hardware/wzd/

MISSISSIPPI DEPARTMENT OF TRANSPORTATION

SECTION 904 - NOTICE TO BIDDERS NO. 5412 **CODE: (SP)**

DATE: **02/18/2015**

SUBJECT: **Weight Limits**

Bidders are hereby advised that all trucks hauling materials to and from this project shall comply with the legal weight limits as established by law. MDOT will not compensate the Contractor for any portion of a load delivered to the project in excess of the legal limit for that truck.

Vehicles relying on harvest permits are limited to hauling only those materials set forth in Section 27-19-81(4) of the Mississippi Code, as amended.

MISSISSIPPI DEPARTMENT OF TRANSPORTATION

SECTION 904 - NOTICE TO BIDDERS NO. 5545 **CODE: (SP)**

DATE: **05/19/2015**

SUBJECT: **Burn-in Period**

Bidders are advised that the contract time for this project has included the time required for the burn-in period for all electrical equipment on this project.

MISSISSIPPI DEPARTMENT OF TRANSPORTATION

SECTION 904 - NOTICE TO BIDDERS NO. 5824 **CODE: (SP)**

DATE: 09/10/2015

SUBJECT: Adjustments for Bituminous Materials

Bidders are advised that Subsection 907-402.03.1.2, Tack Coat, in Special Provision 907-402, allows the Contractor several options for OGFC tack coat. Regardless of the tack coat used, the monthly material adjustment, as referenced in Section 109 of the Standard Specifications, will be made using the base and current prices of tack coat Grade PG 76-22.

Bidders are also advised that the specifications allow the use of RC-70, RC-250, RC-800, RS-1, RS-2, MC-30, MC-250, MS-2h, CMS-2h, LD-7, CQS-1h, ETAC-H, and NTSS-1HM in various other construction operations. If the Contractor uses one of these bituminous materials, the monthly material adjustment will be made using the base and current prices of the materials shown below.

Materials Used	Material Adjustment Made Based on Prices For
RC-70, 250, 800	MC-70
RS-1, 2	CRS-2
MC-30, 250	MC-70
MS-2h, CMS-2h	SS-1
LD-7, CQS-1h, ETAC-H, NTSS-1HM	CSS-1

MISSISSIPPI DEPARTMENT OF TRANSPORTATION

SECTION 904 - NOTICE TO BIDDERS NO. 5865 **CODE: (SP)**

DATE: **10/28/2015**

SUBJECT: **Non-Quality Control / Quality Assurance Concrete**

Bidders are advised that the following concrete items will not be accepted based on the Quality Control / Quality Assurance (QC/QA) requirements of Section 804 of the specifications. The acceptance of these pay items will be based on sampling and testing at the project site by MDOT forces. The Contractor is required to submit mix designs to accomplish this work in accordance with Section 804 and perform normal Quality Control functions at the concrete plant. Acceptance will be in accordance with the requirements of 907-601, Structural Concrete, and TMD-20-04-00-000. At the discretion of the Engineer, the Contractor may request that the concrete be accepted based on QC/QA requirements.

Section	Description
221	Paved Ditches
601	Minor Structures - manholes, inlets, catch basins, junction boxes, pipe headwalls, and pipe collars.
605	Edge Drain and Underdrain Outlet Pads
606	Guardrail Anchors
607	Fence Post Footings
608	Sidewalks
609	Curb and Gutter
614	Driveways
616	Median and Island Pavement
630	Sign Footings, except Overhead Sign Supports

MISSISSIPPI DEPARTMENT OF TRANSPORTATION

SECTION 904 - NOTICE TO BIDDERS NO. 5866 **CODE: (SP)**

DATE: 10/28/2015

SUBJECT: Payroll Requirements

Bidders are hereby advised that the Contractor and Subcontractor(s) are required to submit payroll information to the Project Engineers on a weekly basis.

On Federal-Aid Projects, CAD-880, CAD-881 and certified payroll submissions are required each week the Contractor or a Subcontractor performs work on the project. This is addressed in Section IV of Form FHWA-1273.

On State-Funded Projects, CAD-880 is required each week the Contractor or a Subcontractor performs work on the project.

When no work is performed on either Federal-Aid or State-Funded Projects, the Contractor should only submit CAD-880 showing no work activities.

The Contractor shall make all efforts necessary to submit this information to the Project Engineer weekly. The Engineer will have the authority to suspend the work wholly or in part and to withhold payments because of the Contractor's failure to submit the required information. Submission of forms and payrolls shall be current through the first full week of the month for the estimate period in order for the Project Engineer to process an estimate.

Bidders are advised to review the requirements regarding payroll submissions in Section 110 of the Standard Specifications.

MISSISSIPPI DEPARTMENT OF TRANSPORTATION

SECTION 904 - NOTICE TO BIDDERS NO. 6081 **CODE: (SP)**

DATE: **02/18/2016**

SUBJECT: **Contract Time**

PROJECT: **SP-0303-00(012) / 107179301 – Claiborne County**

The calendar date for completion of work to be performed by the Contractor for this project shall be ***November 18, 2016*** which date or extended date as provided in Subsection 907-108.06 shall be the end of contract time. It is anticipated that the Notice of Award will be issued no later than ***March 22, 2016*** and the effective date of the Notice to Proceed / Beginning of Contract Time will be ***simultaneously with the execution of Contract***.

MISSISSIPPI DEPARTMENT OF TRANSPORTATION

SECTION 904 - NOTICE TO BIDDERS NO. 6082 **CODE: (SP)**

DATE: **2/18/2016**

SUBJECT: **Erosion Control Plan Submittal**

PROJECT: **SP-0303-00(012) / 107179301 – Claiborne County**

Bidders are hereby advised a preliminary Erosion Control Plan has been provided in the plan documents.

The successful Bidder shall be required to submit all required documents pertaining to the Erosion Control Plan along with the executable documents for approval by the Department. The submission shall include any items not addressed in the preliminary Erosion Control Plan. No work on the project shall be performed until the Erosion Control Plan has been approved.

MISSISSIPPI DEPARTMENT OF TRANSPORTATION

SECTION 904 - NOTICE TO BIDDERS NO. 6083 **CODE: (SP)**

DATE: **2/18/2016**

SUBJECT: **Milestone Date**

PROJECT: **SP-0303-00(012) / 107179301 – Claiborne County**

Milestone 1 – Interim Completion Date. Milestone 1 is an interim completion date for the completion of the RV Parking Lot. The Milestone 1 date shall be **August 15, 2016.** The Contractor shall be assessed a disincentive in an amount equal to **$1,000** for each calendar day until Milestone 1 work is completed.

Milestone 2 – Interim Completion Date. Milestone 2 is an interim completion date for the completion of the Car Parking Lot. The Milestone 2 date shall be **September 9, 2016.** The Contractor shall be assessed a disincentive in an amount equal to **$500** for each calendar day until Milestone 2 work is completed.

Final Completion Date. Final completion date to complete all work required in the contract shall be **November 18, 2016.**

MISSISSIPPI DEPARTMENT OF TRANSPORTATION

SPECIAL PROVISION NO. 907-101-4 **CODE: (IS)**

DATE: **11/05/2008**

SUBJECT: **Definitions**

Section 101, Definitions and Terms, of the 2004 Edition of the Mississippi Standard Specifications for Road and Bridge Construction is hereby amended as follows:

907-101.02--Definitions. Replace the following definitions in Subsection 101.02 on pages 3 through 13.

Contract - The written agreement between the Mississippi Transportation Commission and the Contractor setting forth the obligations of the parties thereunder, including but not limited to, the performance of the work, the furnishing of labor and materials, and the basis of payment.

The contract includes the invitation for bids, proposal, contract form and contract bonds, specifications, supplemental specifications, interim specifications, general and detailed plans, special provisions, notices to bidders, notice to proceed, and also any agreements that are required to complete the construction of the work in an acceptable manner, including authorized extensions thereof, all of which constitute one instrument.

Contract Bonds - The approved form of security, executed by the Contractor and the Contractor's Surety(ies), guaranteeing complete execution of the contract and all supplemental agreements pertaining thereto and the payment of all legal debts pertaining to the construction of the project. This term includes Performance and Payment Bond(s).

Surety - A corporate body, qualified under the laws of Mississippi, which is bound with and for the successful bidder by "contract bond(s)" to guarantee acceptable performance of the contract and payment of all legal taxes and debts pertaining to the construction of the project, including payment of State Sales Tax as prescribed by law, and any overpayment made to the Contractor.

Add the following to the list of definitions in Subsection 101.02 on pages 3 through 13.

Performance Bond - The approved form of security, executed by the Contractor and issued by the Contractor's Surety(ies), guaranteeing satisfactory completion of the contract and all supplemental agreements pertaining thereto.

Payment Bond - The approved form of security, executed by the Contractor and issued by the Contractor's Surety(ies), guaranteeing the payment of all legal debts pertaining to the construction of the project including, but not limited to, the labor and materials of subcontractors and suppliers to the prime contractor.

MISSISSIPPI DEPARTMENT OF TRANSPORTATION

SPECIAL PROVISION NO. 907-102-12 **CODE: (SP)**

DATE: 11/18/2015

SUBJECT: Bidding Requirements and Conditions

Section 102, Bidding Requirements and Conditions, of the 2004 Edition of the Mississippi Standard Specifications for Road and Bridge Construction is hereby amended as follows.

907-102.06--Preparation of Proposal. Delete Subsection 102.06 on pages 17 thru 19 and substitute the following.

907-102.06--Preparation of Proposal. MDOT will receive bids for construction projects online using the Bid Express Service (BIDX).

The Bidder's complete proposal (Certification of Performance, Certification Regarding Non-Collusion, etc.) will be submitted to MDOT electronically via the Bid Express Service no later than the day and at the time bids are to be received. Bidders will be responsible for joining Bid Express and getting all necessary clearances and a digital ID in sufficient time for Bid Express to submit their bid.

Bid Express files shall be downloaded from http://www.bidx.com. Bidders are to select Mississippi Department of Transportation under the U.S. AGENCY drop down menu and select the desired project. After completing all necessary data, the Bidders shall submit their bid to Bid Express in sufficient time for the bid to be properly sent to MDOT.

Bids submitted via the Bid Express Service will constitute the official bid and shall be digitally signed and delivered to the Department by the Bid Express Service.

It is the responsibility of every bidder to check for any addendum or modification to the contract document(s) for which they intend to submit a response. It shall be the bidder's responsibility to be sure they are in receipt of all addenda, pre-bid conference information, and/or questions and answers provided at, or subsequent to, the pre-bid conference, if any are issued.

The Mississippi Transportation Commission has no responsibility for defects, irregularities or other problems caused by the use of electronic media. Operation of this electronic media is done at the sole risk of the user.

When the bid schedule contains a fixed contract unit price (FCP) for an item, this price shall be the contract unit price for the item and no alteration shall be made by the bidder.

When an item in the proposal contains a choice to be made by the bidder, the bidder shall indicate the choice in accordance with the INSTRUCTION TO BIDDERS in Section 905 - Proposal; reference is made to Alternate Designs, Alternate Items, and Optional Items as defined in

Subsection 101.02.

Where the bid schedule lists alternate designs or alternate items, the one alternate bid shall be designated by bidding only that alternate, and thereafter no further choice will be permitted.

When the bid schedule lists optional items, the Contractor's selection may, but is not required to, be made at the time of bidding. For optional items not pre-selected, the Contractor's selection shall be made prior to or at the time of execution of the contract.

Each proposal issued will contain a Certification regarding debarment, suspension, and other responsibility matters to be completed by the bidder. The Certification must be sworn to and shall be under penalty of perjury and bidders are cautioned to read and understand its contents in entirety before digitally signing the bid.

The Contractor shall provide immediate written notice to the Contract Administration Engineer Division at any time, prior to or after award, that it is known a certification was erroneous when executed or has become erroneous by reason of changed circumstances.

The bidder's proposal must be digitally signed by the individual, by one or more members of the partnership, by one or more members or officers of each firm representing a joint venture, or by one or more officers of a corporation; or by an agent of the Contractor legally qualified to bind the Contractor and acceptable to the State. If the proposal is made by an individual, the individual's name and address must be shown; by a partnership, the name and address of each partnership member must be shown; as a joint venture, the name and address of each member or officer of the firms represented by the joint venture must be shown; by a corporation, the name of the corporation and the business address of its corporate officials must be shown.

The address stated on the proposal shall be the bidder's permanent address until changed by written notice to the Executive Director. All notices provided for in the contract shall be considered as delivered to the Contractor when mailed or delivered to such address.

907-102.08--Proposal Guaranty. Delete the first and second paragraphs in Subsection 102.08 on page 20 and substitute the following.

No proposal will be considered unless accompanied by certified check, cashier's check or bid bond, made payable to the State of Mississippi, in an amount of not less than five percent (5%) of the total amount of the proposal offered. The guaranty shall be evidence of good faith that, if awarded the contract, the bidder will execute the contract and give performance and payment contract bond(s) as stipulated in Subsection 907-103.05.1, 907-103.05.2, and as required by law.

If a bid bond is offered as guaranty, the bond must be made by a Surety acceptable to the Executive Director and signed or countersigned by a Mississippi Agent or Qualified Nonresident Agent and the Bidder. Such bid bond shall also conform to the requirements and conditions stipulated in Subsection 907-103.05.2 as applicable.

907-102.09--Delivery of Proposals. Delete the paragraph under Subsection 102.09 on page 20,

and substitute the following.

Unless otherwise specified, each proposal shall be submitted online using the Bid Express service. Proposal Forms are non-transferable and no name or names of interested parties may be shown other than those to whom the proposal was issued. All proposals shall be submitted to Bid Express prior to the time and place specified in the Notice to Contractors and on the Bid Express website.

907-102.10--Withdrawal or Revision of Proposals. Delete the paragraph under Subsection 102.10 on page 20, and substitute the following.

A bidder may withdraw or revise a proposal after it has been submitted to Bid Express any time prior to the time set for opening proposals.

MISSISSIPPI DEPARTMENT OF TRANSPORTATION

SPECIAL PROVISION NO. 907-103-11 **CODE: (SP)**

DATE: 07/22/2015

SUBJECT: Award and Execution of Contract

Section 103, Award and Execution of Contract, of the 2004 Edition of the Mississippi Standard Specifications for Road and Bridge Construction is hereby amended as follows:

907-103.04--Return of Proposal Guaranty. Delete the second paragraph of Subsection 103.04 on page 23 and substitute the following:

Certified checks or cashier's checks submitted as proposal guaranties, except those of the two lowest bidders, will be returned within 10 days of contract award. The retained proposal guaranty of the unsuccessful of the two lowest bidders will be returned within ten days following the execution of a contract with the successful low bidder. The retained proposal guaranty of the successful bidder will be returned after satisfactory performance and payment bonds have been furnished and the contract has been executed.

In the event all bids are rejected by the Commission, certified checks or cashier's checks submitted as proposal guaranty by all bidders will be returned within 10 days of rejection.

Delete Subsection 103.05 on page 23 and substitute the following:

907-103.05--Contract Bonds.

907-103.05.1--Requirement of Contract Bonds. Prior to the execution of the contract, the successful bidder shall execute and deliver to the Executive Director a performance and payment bond(s), in a sum equal to the full amount of the contract as a guaranty for complete and full performance of the contract and the protection of the claimants and the Department for materials and equipment and full payment of wages in accordance with Section 65-1-85 Miss. Code Ann. (1972 as amended). In the event of award of a joint bid, each individual, partnership, firm or corporation shall assume jointly the full obligations under the contract and the contract bond(s).

907-103.05.2--Form of Bonds. The form of bond(s) shall be that provided by or acceptable to the Department. These bonds shall be executed by a Mississippi agent or qualified nonresident agent and shall be accompanied by a certification as to authorization of the attorney-in-fact to commit the Surety company. A power of attorney exhibiting the Surety's original seal supporting the Mississippi agent or the qualified nonresident agent's signature shall be furnished with each bond. The Surety company shall be currently authorized and licensed in good standing to conduct business in the State of Mississippi with a minimum rating by A.M. Best of (A-) in the latest printing "Best's Key Rating Guide" to write individual bonds up to ten percent of the policy holders' surplus or listed on the current list of “Companies Holding Certificates of Authority as Acceptable Sureties on Federal Bonds and as Acceptable Reinsuring Companies” as

published by the United States Department of the Treasury, Financial Management Service, Circular 570 (latest revision as published and supplemented on the Financial Management Service Web site and in the Federal Register) within the underwriting limits listed for that Surety. The Mississippi agent or qualified nonresident agent shall be in good standing and currently licensed by the Insurance Commissioner of the State of Mississippi to represent the Surety company(ies) executing the bonds.

Surety bonds shall continue to be acceptable to the Commission throughout the life of the Contract and shall not be canceled by the Surety without the consent of the Department. In the event the Surety fails or becomes financially insolvent, the Contractor shall file a new Bond in the amount designated by the Executive Director within thirty (30) days of such failure, insolvency, or bankruptcy. Subsequent to award of Contract, the Commission or the Department may require additional security for any supplemental agreements executed under the contract or replacement security in the event of the surety(ies) loss of the ratings required above. Suits concerning bonds shall be filed in the State of Mississippi and adjudicated under its laws without reference to conflict of laws principles.

907-103.08--Failure to Execute Contract.. In the first sentence of Subsection 103.08 on page 24, change "bond" to "performance and payment bonds".

MISSISSIPPI DEPARTMENT OF TRANSPORTATION

SPECIAL PROVISION NO. 907-104-5 **CODE: (IS)**

DATE: **05/01/2013**

SUBJECT: **Scope of Work**

Section 104, Scope of Work, of the 2004 Edition of the Mississippi Standard Specifications for Road and Bridge Construction is hereby amended as follows:

907-104.05--Removal and Disposal of All Materials From the Project. Delete the second sentence of the first full paragraph of Subsection 104.05 on page 30 and substitute the following:

The Contractor shall also furnish the Engineer a certified letter stating that the area of disposal is not in a wetland or in Waters of the U.S.

MISSISSIPPI DEPARTMENT OF TRANSPORTATION

SPECIAL PROVISION NO. 907-104-6 **CODE: (SP)**

DATE: **11/20/2014**

SUBJECT: **Partnering Process**

Section 104, Scope of Work, of the 2004 Edition of the Mississippi Standard Specifications for Road and Bridge Construction is hereby amended as follows:

907-104.01--Intent of Contract. At the end of Subsection 104.01 on Page 24, add the following:

907-104.01.1--Partnering Process.

COVENANT OF GOOD FAITH AND FAIR DEALING:

This contract imposes an obligation of good faith and fair dealing in its performance and enforcement.

The Contractor and the Department, with a positive commitment to honesty and integrity, agree to the following mutual duties:

A. Each will function within the laws and statutes applicable to their duties and responsibilities.

B. Each will assist in the other's performance.

C. Each will avoid hindering the other's performance.

D. Each will proceed to fulfill its obligations diligently.

E. Each will cooperate in the common endeavor of the contract.

The Mississippi Department of Transportation intends to encourage the foundation of a cohesive partnership with the contractor and its principal subcontractors and supplier. This partnership will be structured to draw on the strengths of each organization to identify and achieve reciprocal goals. The objectives are effective and efficient contract performance and completion within budget, on schedule, and in accordance with plans and specifications.

FORMAL PARTNERING:

This partnership will be bilateral in make-up, and participation will be required by both MDOT and the Contractor. Any cost associated with effectuating this partnering will be agreed to by both parties and will be shared equally.

To implement this partnering initiative prior to starting of work in accordance with the requirements of Subsection 108.02 Notice to Proceed and prior to the preconstruction conference, the contractor's management personnel and MDOT's District Engineer, will initiate a partnering development seminar/team building workshop. The Contractor working with the assistance of the District and the State Construction Engineer will make arrangements to determine attendees for the workshop, agenda of the workshop, duration, and location. Persons required to be in attendance will be the MDOT key project personnel, the contractor's on-site project manager and key project supervision personnel of both the prime and principal subcontractors and suppliers. The project design engineers, FHWA and key local government personnel will be also be invited to attend as necessary. The contractors and MDOT will also be required to have Regional/District and Corporate/State level managers on the project team.

Follow-up workshops may be held periodically throughout the duration of the contract as agreed by the contractor and Mississippi Department of Transportation.

The establishment of a partnership charter on a project will not change the legal relationship of the parties to the contract nor relieve either party from any of the terms of the contract.

INFORMAL PARTNERING:

If the Contractor and MDOT does not choose to have a Formal Partnering process or the contract does not require a Mandatory Formal Partnering process, an informal partnering meeting shall be conducted on at least a monthly basis. It will be mandatory that the Project Engineer and Project Superintendent attend the meeting. It is recommended that MDOT Inspectors, foremen, and other project managers attend the meeting.

The Project Engineer will be responsible for taking minute of the meeting. As soon as practical after the meeting, the Engineer will send a copy of the minutes of the meeting to the Contractor, District Construction Engineer, and State Construction Engineer. The Contractor will have 30 days to dispute the contents of the minutes or they will become an official record of the project.

MISSISSIPPI DEPARTMENT OF TRANSPORTATION

SPECIAL PROVISION NO. 907-105-8 **CODE: (SP)**

DATE: **11/20/2014**

SUBJECT: **Control of Work**

Section 105, Control of Work, of the 2004 Edition of the Mississippi Standard Specifications for Road and Bridge Construction is modified as follows.

907-105.04--Coordination of Plans, Specifications, Interim Specifications, Special Provisions and Notice to Bidders. Delete the second full paragraph of Subsection 105.04 on page 35, and substitute the following.

In case of a conflict between plan quantities, advertisement quantities, and/or bid sheet quantities, the bid sheet quantities shall prevail.

907-105.05--Cooperation by Contractor. Delete Subsection 105.05 on page 35 and substitute the following.

907-105.05--Cooperation by Contractor. The Contractor shall give the work the attention necessary to expedite its progress, and shall cooperate with the Engineer, inspectors and other Contractors in every possible way.

907-105.05.1--Project Superintendent. The Contractor shall have a competent and experienced full time resident superintendent who is capable of reading and understanding the plans and specifications for the particular work being performed. The superintendent shall be on the project site at any time work is being performed by the Prime Contractor or any Subcontractors. The superintendent shall advise the Project Engineer of an intended absence from the work and designate a person to be in charge of the work during such absence. The superintendent shall receive instructions from the Engineer or authorized representative. Upon issuance of the Notice to Award, the Contractor or duly appointed agent authorized to bind the Contractor shall file with the Executive Director the name and address of the superintendent who will supervise the work with copies to the Construction Engineer, Contract Administration Engineer, District Engineer and Project Engineer. The Executive Director shall be immediately notified in writing with copies to those stated when a change is made in the Contractor's superintendent or superintendent's address. The superintendent shall have full authority to execute orders or directives of the Engineer without delay and to promptly supply materials, equipment, labor and incidentals as may be required. Such superintendence shall be furnished irrespective of the amount of work sublet.

907-105.05.2--Certified Erosion Control Person. On projects that require an erosion control plan, the Contractor shall also designate a responsible person whose primary duty shall be to monitor and maintain the effectiveness of the erosion control plan, including NPDES permit

requirements. This responsible person must be a Certified Erosion Control Person certified by an organization approved by the Department. Prior to or at the pre-construction conference, the Contractor shall designate in writing the Certified Erosion Control Person to the Project Engineer. The designated Certified Erosion Control Person shall be assigned to only one (1) project. When special conditions exist, such as two (2) adjoining projects or two (2) projects in close proximity, the Contractor may request in writing that the State Construction Engineer approve the use of one (1) Certified Erosion Control Person for both projects. The Contractor may request in writing that the Engineer authorize a substitute Certified Erosion Control Person to act in the absence of the Certified Erosion Control Person. The substitute Certified Erosion Control Person must also be certified by an organization approved by the Department. A copy of the Certified Erosion Control Person's certification must be included in the Contractor's Protection Plan as outlined in Subsection 907-107.22.1. This in no way modifies the requirements regarding the assignment and availability of the superintendent.

907-105.14--Maintenance During Construction. Before the first sentence Subsection 105.14 on page 39, add the following.

The Contractor will be responsible for the maintenance of existing roadways within the limits of this project starting on the date of the Notice To Proceed / Beginning of Contract Time. Anytime work is performed in a travel lane, the Contractor shall install portable lane closure signs meeting the requirement of the MDOT Standard Drawing or MUTCD.

907-105.16--Acceptance. Delete Subsection 105.16 on pages 40 and 41, and substitute the following.

907-105.16--Acceptance.

907-105.16.1--Partial Acceptance of a Unit. When the Contractor has completed a unit of the work such as an interchange, a structure, a portion of the road or pavement or one project of a multi-project contract, the Contractor may request the Engineer to make a final inspection of that unit; or the Executive Director may order a final inspection of the unit if it is in the public's interest. If the Engineer finds upon inspection that the unit has been completed in compliance with the contract and it is a complete facility which can be made available to the public or made available for the prosecution of work under another contract, the Executive Director may conditionally accept the unit and conditionally relieve the Contractor of certain contractual responsibilities as defined in the release.

In the event items of work covered by such release are found to be defective or deficient as evidenced by unsatisfactory test reports of materials incorporated in the work or other engineering determination, the release shall terminate upon written notification to the Contractor. The Contractor shall make all corrections, restorations, constructions or reconstructions deemed necessary and shall resume all contractual responsibilities until all corrective measures have been made in accordance with the terms of the contract.

Partial acceptance does not constitute final acceptance of the work, or any part thereof, nor in any way void or alter any of the terms of the contract.

Relief from "certain contractual responsibilities" as indicated herein may, or may not, include:

(a) Further maintenance of the defined limits of the partially accepted work.
(b) Further public liability for the defined limits of the partially accepted work.
(c) Further liability for liquidated damages as applicable to the value of the partially accepted work when the quantities for the partially accepted work are separate quantities listed on the Summary of Quantities sheet of the plans, and the separate quantities and the total amounts thereof are listed on the Engineer's Estimate. Otherwise, no reduction in liquidated damages will be made because of such partial acceptance.

Unless specifically provided in the contract, the liability for liquidated damages shall not be reduced to less than that applicable under the contract for an amount of such work equal to at least fifty percent (50%) of the total amount of work under the contract.

907-105.16.2--Partial Maintenance Release of a Project. Upon written notice from the Contractor of presumptive completion of all the work and upon due notice from the Resident or Project Engineer, the Engineer will make an inspection.

If the inspection discloses any work as being unsatisfactory or incomplete, the Engineer will discuss in detail with the Contractor all discrepancies in the work. Upon correction of the work, another inspection will be made which shall constitute the final inspection provided the work has been satisfactorily completed.

However, if during the final inspection the Engineer determines that all work has been satisfactorily completed save that of growth and coverage of plant establishment on all or part of the work, the Engineer may recommend partial release of all work except items related to growth and coverage. Upon such recommendation, the Contractor will be given a partial release of maintenance and shall be released from further contractual liabilities for the completed work. The Contractor will retain responsibility for plant establishment and all maintenance and repairs appurtenant thereto until satisfactory growth and coverage is achieved.

907-105.16.3--Final Maintenance Release of a Project. Upon written notice from the Contractor of presumptive completion of all the work and upon due notice from the Resident or Project Engineer, the Engineer will make an inspection. If all work provided by the contract has been completed to the Engineer's satisfaction, the inspection will constitute the final inspection, and the Engineer will conditionally release the Contractor of maintenance.

As provided in the contract, in the event items of work are found to be deficient or defective as evidenced by unsatisfactory test reports of material incorporated into the work, the Contractor shall assume full responsibility for corrective measures, and shall reassume maintenance and public liability until such corrective measures are completed to the satisfaction of the Engineer.

907-105.16.4.--Final Acceptance of a Project. Upon evidence that the Contractor has fulfilled all obligations under the contract, the Executive Director will make final acceptance and notify the Contractor in writing. Final acceptance of the project will not be given until all obligations imposed under the contract, including but not limited to the final reporting of payrolls, final reporting of DBE payments, acceptable certifications and test reports of materials used, etc., have been fulfilled.

MISSISSIPPI DEPARTMENT OF TRANSPORTATION

SUPPLEMENT TO SPECIAL PROVISION NO. 907-107-13

DATE: 11/17/2015

SUBJECT: Permits, Licenses and Taxes

After the second paragraph of Subsection 907-107.02 on page 1, add the following.

Prior to commencing work on any Project, the Contractor shall obtain a Material Purchase Certificate number (MPC#) from the Mississippi Department of Revenue, pursuant to Miss. Code Ann. § 27-65-21, and Miss. Admin. Code 35.IV.10.01. Upon receipt of the MPC#, the Contractor must immediately provide the MPC# to the Contract Administration Division of the Department. Failure to obtain and submit a MPC# prior to commencing work shall result in the withholding of payment to the Contractor until such time that a MPC# is obtained and submitted to the Department.

Delete the last sentence of the last paragraph of Subsection 907-107.02 on page 1, and substitute the following.

The Department will notify the Mississippi Department of Revenue of the names and addresses of any Contractors or Subcontractors.

MISSISSIPPI DEPARTMENT OF TRANSPORTATION

SPECIAL PROVISION NO. 907-107-13 **CODE: (IS)**

DATE: **05/01/2013**

SUBJECT: **Legal Relations and Responsibility to Public**

Section 107, Legal Relations and Responsibility to Public, of the 2004 Edition of the Mississippi Standard Specifications for Road and Bridge Construction is hereby amended as follows.

907-107.02--Permits, Licenses and Taxes. Delete in toto Subsection 107.02 on page 49 and substitute the following.

The Contractor or any Subcontractor shall have the duty to determine any and all permits and licenses required and to procure all permits and licenses, pay all charges, fees and taxes and issue all notices necessary and incidental to the due and lawful prosecution of the work. At any time during the life of this contract, the Department may audit the Contractor's or Subcontractor's compliance with the requirements of this section.

The Contractor or any Subcontractor is advised that the "Mississippi Special Fuel Tax Law", Section 27-55-501, et seq. and the Mississippi Use Tax Law, Section 27-67-1, et seq., and their requirements and penalties, apply to any contract or subcontract for construction, reconstruction, maintenance or repairs, for contracts or subcontracts entered into with the State of Mississippi, any political subdivision of the State of Mississippi, or any Department, Agency, Institute of the State of Mississippi or any political subdivision thereof.

The Contractor or any Subcontractor will be subject to one or more audits by the Department during the life of this contract to make certain that all applicable fuel taxes, as outlined in Section 27-55-501, et seq., and any sales and/or use taxes, as outlined in Section 27-67-1, et seq. are being paid in compliance with the law. The Department will notify the Mississippi State Tax Commission of the names and addresses of any Contractors or Subcontractors.

907-107.14--Damage Claims and Insurance.

907-107.14.2--Liability Insurance. Delete Subsection 107.14.2 beginning on page 60 and substitute the following.

907-107.14.2.1--General. The Contractor shall carry Contractor's liability, including subcontractors and contractual, with limits not less than: $500,000 each occurrence; $1,000,000 aggregate; automobile liability - $500,000 combined single limit - each accident; Workers' Compensation and Employers' Liability - Statutory & $100,000 each accident; $100,000 each employee; $500,000 policy limit. Each policy shall be signed or countersigned by a Mississippi Agent or Qualified Nonresident Agent of the Insurance Company.

The Contractor shall have certificates furnished to the Department from the insurance companies providing the required coverage. The certificates shall be on the form furnished by the Department and will show the types and limits of coverage.

907-107.14.2.2--Railroad Protective. The following provisions are applicable to all work performed under a contract on, over or under the rights-of-way of each railroad shown on the plans.

The Contractor shall assume all liability for any and all damages to work, employees, servants, equipment and materials caused by railroad traffic.

Prior to starting any work on railroad property, the Contractor shall furnish satisfactory evidence to the Department that insurance of the forms and amounts set out herein in paragraphs (a) and (b) has been obtained. Also, the Contractor shall furnish similar evidence to the Railroad Company that insurance has been obtained in accordance with the Standard Provisions for General Liability Policies and the Railroad Protective Liability Form as published in the Code of Federal Regulations, 23 CFR 646, Subpart A. Evidence to the Railroad Company shall be in the form of a Certificate of Insurance for coverages required in paragraph (b), and the original policy of the Railroad Protective Liability Insurance for coverage required in paragraph (a).

All insurance herein specified shall be carried until the contract is satisfactorily complete as evidenced by a release of maintenance from the Department.

The Railroad Company shall be given at least 30 days notice prior to cancellation of the Railroad Protective Liability Insurance policy.

For work within the limits set out in Subsection 107.18 and this subsection, the Contractor shall provide insurance for bodily injury liability, property damage liability and physical damage to property with coverages and limits no less than shown in paragraphs (a) and (b). Bodily injury shall mean bodily injury, sickness, or disease, including death at anytime resulting therefrom. Property damage shall mean damages because of physical injury to or destruction of property, including loss of use of any property due to such injury or destruction. Physical damage shall mean direct and accidental loss of or damage to rolling stock and their contents, mechanical construction equipment or motive power equipment.

(a) **Railroad Protective Liability Insurance** shall be purchased on behalf of the Railroad Company with limits of $2,000,000 each occurrence; $6,000,000 aggregate applying separately to each annual period for lines without passenger trains. If the line carries passenger train(s), railroad protective liability insurance shall be purchased on behalf of the Railroad Company with limits of $5,000,000 each occurrence; $10,000,000 aggregate applying separately to each annual period.

Coverage shall be limited to damage suffered by the railroad on account of occurrences arising out of the work of the Contractor on or about the railroad right-of-way, independent of the railroad's general supervision or control, except as noted in paragraph 4 below.

Coverage shall include:

(1) death of or bodily injury to passengers of the railroad and employees of the railroad not covered by State workmen's compensation laws,

(2) personal property owned by or in the care, custody or control of the railroads,

(3) the Contractor, or any of the Contractor's agents or employees who suffer bodily injury or death as a result of acts of the railroad or its agents, regardless of the negligence of the railroads, and

(4) negligence of only the following classes of railroad employees:

(i) any supervisory employee of the railroad at the job site

(ii) any employee of the railroad while operating, attached to, or engaged on, work trains or other railroad equipment at the job site which are assigned exclusively to the Contractor, or

(iii) any employee of the railroad not within (i) or (ii) above who is specifically loaned or assigned to the work of the Contractor for prevention of accidents or protection or property, the cost of whose services is borne specifically by the Contractor or Governmental authority.

(b) **Contractor's Liability - Railroad**, including subcontractors, XCU and railroad contractual with limits of $1,000,000 each occurrence; $2,000,000 aggregate. **Automobile** with limits of $1,000,000 combined single limit any one accident; **Workers' Compensation and Employer's Liability** - statutory and $100,000 each accident; $100,000 each employee; $500,000 policy limit. **Excess/Umbrella Liability** $5,000,000 each occurrence; $5,000,000 aggregate. All coverage to be issued in the name of the Contractor shall be so written as to furnish protection to the Contractor respecting the Contractor's operations in performing work covered by the contract. Coverage shall include protection from damages arising out of bodily injury or death and damage or destruction of property which may be suffered by persons other than the Contractor's own employees.

In addition, the Contractor shall provide for and on behalf of each subcontractor by means of a separate and individual liability and property damage policy to cover like liability imposed upon the subcontractor as a result of the subcontractor's operations in the same amounts as contained above; or, in the alternative each subcontractor shall provide same.

907-107.15--Third Party Beneficiary Clause. In the first sentence of the first paragraph of Subsection 107.15 on page 61, change "create the public" to "create in the public".

907-107.17--Contractor's Responsibility for Work. Delete the fifth sentence of the fifth paragraph of Subsection 107.17 on page 63 and substitute the following.

The eligible permanent items shall be limited to traffic signal systems, changeable message signs, roadway signs and sign supports, lighting items, guard rail items, delineators, impact

attenuators, median barriers, bridge railing or pavement markings. The eligible temporary items shall be limited to changeable message signs, guard rail items, or median barriers.

907-107.18--Contractor's Responsibility for Utility Property and Services. After the first sentence of Subsection 107.18 on page 63, add the following:

Prior to any excavation on the project, the Contractor shall contact MS 811 and advise them to mark all known utilities in the area of the excavation.

MISSISSIPPI DEPARTMENT OF TRANSPORTATION

SUPPLEMENT TO SPECIAL PROVISION NO. 907-107-14

DATE: **06/03/2014**

SUBJECT: **Contractor's Protection Plan**

907-107.22.1--Contractor's Erosion Control Plan. Delete the first sentence of the second paragraph of Subsection 907-107.22.1 on page 1, and substitute the following.

The time between the Notice of Award and Notice to Proceed/Beginning of Contract Time in the proposal, has been allowed for the submittal and concurrence of the Contractor's erosion control plan, MDOT's review of the plan, and any revisions that may be necessary.

After the last paragraph of Subsection 907-107.22.1 on page 2, add the following.

As soon as the ECP has been approved, a copy of the SWPPP (Narrative, ECP with updates) shall be available on the project at all times. The Contractor shall provide and install a weatherproof enclosure, such as a mailbox, on the project at a location that will be readily accessible to the Engineer or others who may want to review the project ECP. The cost of installing and maintaining this enclosure shall be included in the prices bid for the various erosion control pay items and no direct payment will be made for this work.

MISSISSIPPI DEPARTMENT OF TRANSPORTATION

SPECIAL PROVISION NO. 907-107-14 **CODE: (IS)**

DATE: **05/22/2013**

SUBJECT: **Contractor's Protection Plan**

Section 107, Legal Relations and Responsibility to Public, of the 2004 Edition of the Mississippi Standard Specifications for Road and Bridge Construction is hereby amended as follows:

Delete in toto Subsection 107.22.1 on pages 65 and 66, and substitute the following.

907-107.22.1--Contractor's Erosion Control Plan. At the preconstruction conference or prior to starting any work on the project, the Contractor shall submit to the Project Engineer for concurrence a comprehensive erosion and siltation control plan. The plan shall utilize temporary measures and permanent erosion control features to provide acceptable controls during all stages of construction. If an early Notice to Proceed is desired, the Contractor's Erosion Control Plan should be submitted to the Engineer as soon as possible after award since an approved erosion control plan is required for an early Notice to Proceed.

Approximately 60 calendar days, the time between the Notice of Award and Notice to Proceed/Beginning of Contract Time in the proposal, has been allowed for the submittal and concurrence of the Contractor's erosion control plan, MDOT's review of the plan, and any revisions that may be necessary. The original contract time shall not be adjusted unless delays are caused solely by the Department for the submission, review, and concurrence of the Contractor's erosion control plan.

As a minimum, the plan shall include the following:

1. Erosion Control Plan (ECP) sheets or the plan profile sheets, 11" x 17" or larger, of all areas within the rights-of-way from the Beginning of the Project (BOP) to the End of the Project (EOP) showing the location of all temporary erosion control devices. Erosion control devices should be identified by exact type, temporary or permanent, configuration, and placement of each item to prevent erosion and siltation. A narrative of the Contractor's temporary erosion control plan shall be submitted in a format similar to the form attached to this special provision, but must include the heading and sub-heading information. As a minimum, the narrative shall include the following:
   - A detailed description, including locations (station numbers) of the Contractor's proposed sequence of operations including, but not limited to, clearing and grubbing, excavation, drainage, and structures.
   - A detailed description, including locations, and best management practices (BMP) that will be used to prevent siltation and erosion from occurring during the Contractor's proposed sequence of operations.

2. A copy of the certification for the Contractor's Certified Erosion Control Person whose primary duty shall be monitoring and maintaining the effectiveness of the erosion control plan, BMPs, and compliance with the NPDES permit requirements.
3. A plan for the disposal of waste materials on the project right-of-way which shall include but not be limited to the following:
   - containment and disposal of materials resulting from the cleaning (washing out) of concrete trucks that are delivering concrete to the project site.
   - containment and disposal of fuel / petroleum materials at staging areas on the project.

The erosion and siltation control plan shall be maintained on the project site at all times, updated as work progresses to show changes due to revisions in the sequences of construction operations, replacement of inadequate BMPs, and the maintenance of BMPs. Work shall not be started until an erosion control plan has been concurred with by the MDOT. The Engineer will have the authority to suspend all work and/or withhold payments for failure of the Contractor to carry out provisions of MDEQ's Storm Water Construction General Permit, the erosion control plan, updates to the erosion control plan, and /or proper maintenance of the BMPs.

907-107.22.2--Clearing and Grubbing, Haul Roads, Waste Areas, Plant Sites or Other Areas Occupied by the Contractor. Delete the fourth paragraph of Subsection 107.22.2 on page 66 and substitute the following.

Unless otherwise determined by the Engineer from a study of overall job conditions, the exposed surface area of erodible material at any one time on this project shall not exceed 19 acres without prior approval by the Engineer.

EXAMPLE
MISSISSIPPI DEPARTMENT OF TRANSPORTATION
Storm Water Pollution Prevention Plan (SWPPP)
Narrative

General Permit Coverage No: MSR_____
Project Number: _____
County: _____
Route: _____

SITE INFORMATION

This project consists of grading and installing drainage structures necessary to construct approximately 6 miles of parallel lanes on SR 31 between the Hinds County Line and the Rankin County Line.

SEDIMENT AND EROSION CONTROLS

VEGETATIVE CONTROLS: Clearing and grubbing areas will be minimized to comply with the buffer zones (minimum of 15 feet along the ROW lines and 5 feet along creeks) as per the contract documents. A combination of temporary and permanent grassing will be used to protect slopes as construction progresses. **Should a disturbed area be left undisturbed for 14 days or more, temporary or permanent vegetation will be placed within 7 calendar days.**

STRUCTURAL CONTROLS: Gravel construction entrance/exit will be installed near Stations 145+50, 159+50, 164+50 & 172+50. Riprap ditch checks will be constructed at Stations 144+50, 151+75, 162+00 & 166+25. The Concrete washout area will be at Stations 140+25, 152+00 & 168+50.

HOUSEKEEPING PRACTICES: Structural BPM's will be cleaned out when sediment reaches 1/3 to 1/2 of the height of the BMP. Maintenance and repair of equipment will be performed off-site, material wash out will occur either off-site or within designated wash out areas.

POST-CONSTRUCTION CONTROL MEASURES: As construction is completed, permanent vegetative growth will be established on disturbed soils to improve soil stability and provide a buffer zone for loose material. Paved ditches and flumes will be placed as specified in the ECP to reduce erosion in concentrated flow areas and rip rap will be placed as specified to dissipate flow energy and reduce flow velocity.

IMPLEMENTATION SEQUENCE

Perimeter controls will be installed first. Clearing and grubbing will be performed in 19-acre sections beginning at the BOP and temporary grassing will be installed as needed. Temporary erosion control BMP's will be installed at the drainage structures prior/during construction of the drainage structures. Grading activities will commence at the BOP and proceed towards the EOP, fill slopes will be permanently grassed in stages for fill heights that exceed 5 feet. Base materials will be installed on completed grading sections with the paving to follow.

MAINTENANCE PLAN

All erosion and sediment control practices will be checked for stability and operation following every rainfall but in no case less than once every week. Any needed repairs will be made immediately to maintain all practices as designed. Sediment basins will be cleaned out when the level of sediment reaches 2.0 feet below the top of the riser. Sediment will be removed from behind BMP's when it becomes about 1/3 to 1/2 height of BMP.

_____ _____
Prime Contractor's Signature Date

_____ _____
Printed Name Title

MISSISSIPPI DEPARTMENT OF TRANSPORTATION

SUPPLEMENT TO SPECIAL PROVISION NO. 907-108-37

DATE: **12/17/2015**

SUBJECT: **Prosecution and Progress**

Delete the first paragraph of Subsection 907-108.03.1 on pages 1 and 2, and substitute the following.

907-108.03.1--Progress Schedule. On working day projects, the Department will furnish the Contractor a progress schedule developed for the determination of contract time which may be used as the contract progress schedule, or the Contractor's own proposed progress schedule may be submitted for approval. If the Contractor elects to furnish a progress schedule for approval by the Engineer, it should be furnished promptly after award of the contract.

On completion date projects which include A + B projects, the Contractor shall furnish a progress schedule and be prepared to discuss both its proposed methodologies for fulfilling the scheduling requirements and its sequence of operations.

The Engineer will review Contractor prepared progress schedules and approve schedules as it relates to compliance with the specifications and logic. The progress schedule must be approved by the Engineer prior to commencing work. The progress schedule shall be a computer generated bar-chart type schedule meeting the below minimum requirements. These activities shall be significantly detailed enough to communicate the Contractor's understanding of the construction sequencing and phasing of the project.

MISSISSIPPI DEPARTMENT OF TRANSPORTATION

SPECIAL PROVISION NO. 907-108-37 **CODE: (SP)**

DATE: 12/08/2014

SUBJECT: Prosecution and Progress

Section 108, Prosecution and Progress, of the 2004 Edition of the Mississippi Standard Specifications for Road and Bridge Construction is hereby amended as follows.

907-108.01--Subletting of Contract.

907-108.01.1--General. At the end of the last paragraph of Subsection 108.01.1 on page 73, add the following.

The Engineer will have the authority to suspend the work wholly or in part and to withhold payments because of the Contractor's failure to make prompt payment within 15 calendar days as required above, or failure to submit the required OCR-484 Form, Certification of Payments to Subcontractors, which is also designed to comply with prompt payment requirements.

907-108.02--Notice To Proceed. Delete the second paragraph of Subsection 108.02 on page 75 and substitute the following.

The anticipated date of the Notice to Proceed (NTP) / Beginning of Contract Time (BCT) will be specified in the proposal.

Delete the fourth paragraph of Subsection 108.02 on page 75 and substitute the following.

Upon written request from the Contractor and if circumstances permit, the Notice to Proceed may be issued at an earlier date subject to the conditions stated therein. The Contractor shall not be entitled to any monetary damages or extension of contract time for any delay claim or claim of inefficiency occurring between the early issuance Notice To Proceed date and the Notice to Proceed date stated in the contract.

907-108.03--Prosecution and Progress. Delete Subsection 108.03.1 on pages 75 & 76, and substitute the following.

907-108.03.1--Progress Schedule. On working day projects, the Department will furnish the Contractor a progress schedule developed for the determination of contract time which may be used as the contract progress schedule, or the Contractor's own proposed progress schedule may be submitted for approval. If the Contractor elects to furnish a progress schedule for approval by the Engineer, it should be furnished promptly after award of the contract. The Engineer will review the schedule and approve the schedule as it relates to compliance with the specifications and logic. The progress schedule must be approved by the Engineer prior to commencing work. The progress schedule shall be a bar-chart type schedule submitted on 11"x17" paper meeting

the below minimum requirements. These activities shall be significantly detailed enough to communicate the Contractor's understanding of the construction sequencing and phasing of the project.

When preparing the progress schedule, the Contractor shall include the following:

- Show a time scale to graphically show the completion of the work within contract time.
- Define and relate activities to the contract pay items.
- Show all activities in the order the work is to be performed including submittals, submittal reviews, fabrication and delivery.
- Show all activities that are controlling factors in the completion of the work.
- Show the time needed to perform each activity and its relationship in time to other activities.

This progress schedule shall provide a bar for each major phase of construction such as, but not limited to, clearing and grubbing, grading, drainage structures, bridges, base, shoulders, paving, etc. with an estimated start working day and completion working day for each bar, all within the specified contract time.

A revised progress schedule may be required within ten days of the occurrence of any one of the following conditions:

- when a major change occurs in the work
- when a time extension is granted
- when the progress schedule becomes unrealistic

The Engineer's approval of the aforementioned Progress Schedules does not waive any contract requirements.

In the event the Contractor has not submitted an approvable progress schedule by the beginning of contract time, the progress schedule prepared by the Department shall be the approved progress schedule and used to assess contract time.

An approved progress schedule shall be in effect until the date on which a revised schedule is approved. The approved progress schedule will be the basis for contract time assessment.

When a Critical Path Method (CPM) schedule is required in the proposal, this schedule will be used in lieu of the bar graph progress schedule in evaluating work progress. In such case, the same time frame noted in this subsection for the original submittal along with the update requirements will apply.

907-108.03.2--Preconstruction Conference. Delete the first paragraph of Subsection 108.03.2 on page 76 and substitute the following.

Prior to commencement of the work, a preconstruction conference shall be held for the purpose of discussing with the Contractor essential matters pertaining to the prosecution and satisfactory

completion of the work. The Contractor will be responsible for scheduling the preconstruction conference. The Contractor will advise the Project Engineer in writing 14 days prior to the requested date that a conference is requested. When the contract requires the Contractor to have a certified erosion control person, the Contractor's certified erosion control person shall be at the preconstruction conference. The Department will arrange for utility representatives and other affected parties to be present.

Delete the third paragraph of Subsection 108.03.2 on page 76.

907-108.06--Determination and Extension of Contract Time. Delete Subsections 108.06.1 and 108.06.2 on pages 79 thru 85 and substitute the following.

907-108.06.1--Based on Working Day Completion.

907-108.06.1.1--General. Contract Time will be established on the basis of an allowable number of Working Days, as indicated in the contract. A working day is defined as a day the Contractor worked or could have worked in accordance with the conditions set forth in Subsection 907-108.06.1.2, Subparagraphs (a) and (b), except during the months of December, January, and February.

During the months of December, January, and February, time will be assessed in the miscellaneous phase regardless of whether or not the Contractor actually works. The value for the time on any particular day will be determined by dividing the number of anticipated working day shown in the following table by the number of days in the particular month. This number will be expressed to three decimal places (0.000)

The span of time allowed for the completion of the work included in the contract will be indicated in the contract documents and will be known as "Contract Time".

907-108.06.1.2--Contract Time. The following TABLE OF ANTICIPATED WORKING DAYS indicates an average/anticipated number of working days per month.

TABLE OF ANTICIPATED WORKING DAYS

Month	Working Days
January	6
February	7
March	11
April	15
May	19
June	20
July	21
August	21
September	20
October	16
November	11
December	5
Calendar Year	172

NOTE: The above Table is for informational purposes only. The actual working day total as assessed by the Project Engineer on Form CSD-765 shall govern.

Available working days will start being assessed at the original Notice to Proceed/Beginning of Contract Time date shown in the contract documents, regardless of whether or not the Contractor has been issued an early Notice to Proceed.

Available working days will be based on soil and weather conditions and other specific conditions cited in the contract. The Engineer will determine on each applicable day the extent to which work in progress could have been productive, regardless of whether the Contractor actually worked.

An available working day will be assessed as follows:

(a) any day of the week, Monday through Friday, exclusive of legal holidays recognized by the Department in Subsection 108.04.1, in which the Contractor works or could have worked for more than six (6) consecutive hours on the controlling item(s) of work, as determined by the Engineer from the approved progress schedule. When the Contractor works or could work more than four but less than six consecutive hours, one-half (0.5) of an available work day will be charged for that day. When the Contractor works or could work six or more consecutive hours during the day, one (1.0) available work day will be charged for that day, and

(b) any Saturday, exclusive of legal holidays recognized by the Department in Subsection 108.04.1, in which the Contractor works for more than six (6) consecutive hours on the controlling item(s) of work, as determined by the Engineer from the approved progress schedule. When the Contractor works less than four consecutive hours during the day, no time will be charged for that day. When the Contractor works more than four but less than six

consecutive hours, one-half (0.5) of an available work day will be charged for that day. When the Contractor works six or more consecutive hours during the day, one (1.0) available work day will be charged for that day.

Should the weather or other conditions be such that four (4) consecutive satisfactory hours are not available prior to noon (for daytime operations) or midnight (for nighttime operations), no time will be assessed for that day regardless of the above conditions. However, if the Contractor elects to work, time will be assessed in accordance with the previous paragraph.

Time will not be charged during any required waiting period for placement of permanent pavement markings as set forth in Subsection 618.03 provided all other work is complete except growth and coverage of vegetative items as provided in Subsection 210.01.

Each month the Engineer will complete, and furnish to the Contractor, an "Assessment Report of Working Days" (CSD-765). This report shows the number of working days assessed during the estimate period and the cumulative working days assessed to date. The Contractor should review the Engineer's report as to the accuracy of the assessment and confer with the Resident or Project Engineer to rectify any differences. Each should make a record of the differences, if any, and conclusions reached. In the event mutual agreement cannot be reached, the Contractor will be allowed a maximum of 15 calendar days following the ending date of the monthly report in question to file a protest Notice of Claim in accordance with the provisions of Subsection 105.17. Otherwise, the Engineer's assessment shall be final unless mathematical errors of assessment are subsequently found to exist, and any claim of the Contractor as to such matter shall be waived.

The Contractor's progress will be determined monthly at the time of each progress estimate and will be based on the percentage of money earned by the Contractor compared to the percentage of elapsed time.

The percentage of money earned will be determined by comparing the total money earned to-date by the Contractor, minus any payment for advancement of materials, to the total dollar amount of the contract. The percentage of time elapsed will be determined by comparing the working days assessed to-date on Form CSD-765 to the total allowable working days for the contract.

When the "percent complete" lags more than 20 percent behind the "percentage of elapsed time", the Contractor shall immediately submit a written statement and revised progress schedule indicating any additional equipment, labor, materials, etc. to be assigned to the work to ensure completion within the specified contract time. When the "percent complete" lags more than 40 percent behind the "percentage of elapsed time", the contract may be terminated.

907-108.06.1.3--Extension of Time. The Contractor may, prior to the expiration of the Contract Time, make a written request to the Engineer for an extension of time with a valid justification for the request. The Contractor's plea that insufficient time was specified is not a valid reason for extension of time.

An extension of contract time may be granted for unforeseen utility delays, abnormal delays caused solely by the State or other governmental authorities, or unforeseeable disastrous phenomena of nature of the magnitude of earthquakes, hurricanes, named tropical storms, tornadoes, or flooded essential work areas which are deemed to unavoidably prevent prosecuting the work.

The span of time allowed in the contract as awarded is based on the quantities used for comparison of bids. If satisfactory fulfillment of the contract requires performance of work in greater quantities than those set forth in the proposal, the time allowed for completion shall be increased in Working Days in the same ratio that the cost of such added work, exclusive of the cost of work altered by Supplemental Agreement for which a time adjustment is made for such altered work in the Supplemental Agreement, bears to the total value of the original contract unless it can be established that the extra work was of such character that it required more time than is indicated by the money value.

Any extension of contract time will be on a working day basis.

The Contractor shall provide sufficient materials, equipment and labor to guarantee the completion of the work in the contract in accordance with the plans and specifications within the Contract Time.

If the contract time of the project is extended into a season of the year in which completion of certain items of work would be prohibited or delayed because of seasonal or temperature limitations, the Engineer may waive the limitations provided the completion of the work will not result in a reduction in quality. When determined that the completion of the out-of-season items will cause a reduction in the quality of the work, the completion of the project will be further extended so the items may be completed under favorable weather conditions. In either case, the Engineer will notify the Contractor in writing.

Liquidated damages as set forth in Subsection 907-108.07 under the heading "Daily Charge Per Calendar Day" in the Table titled "Schedule of Deductions for Each Day of Overrun in Contract Time", shall be applicable to each calendar day after the specified completion date, or authorized extension thereof, and until all work under the contract is completed.

907-108.06.1.4--Cessation of Contract Time. When the Engineer by written notice schedules a final inspection, time will be suspended until the final inspection is conducted and for an additional 14 calendar days thereafter. If after the end of the 14-day suspension all necessary items of work have not been completed, time charges will resume. If the specified completion date had not been reached at the time the Contractor called for a final inspection, the calendar day difference between the specified completion date and the date the Contractor called for a final inspection will be added after the 14-day period before starting liquidation damages. If a project is on liquidated damages at the time a final inspection is scheduled, liquidated damages will be suspended until the final inspection is conducted and for seven (7) calendar days thereafter. If after the end of the 7-day suspension all necessary items of work have not been completed, liquidated damages will resume. When final inspection has been made by the Engineer as prescribed in Subsection 105.16 and all items of work have been completed, the

daily time charge will cease.

907-108.06.2--Based on Specified Completion Date.

907-108.06.2.1--General. Contract Time will be established on the basis of a Specified Completion Date indicated in the Contract, or as determined by the Contractor in accordance with the contract documents. The span of time allowed for the completion of the work included in the contract will be known as "Contract Time".

For contracts in which a Specified Completion Date is indicated in the Contract, the span of Contract Time shall be between the date of the Beginning of Contract Time and the Specified Completion Date indicated in the Contract.

For contracts in which a Completion Date is determined by the Contractor (A + B Contracts), the span of Contract Time shall be between the date of the Beginning of Contract Time and the date representing the number of Calendar Days determined by the Contractor to complete the work.

The Contractor shall provide sufficient materials, equipment and labor to guarantee the completion of the work in the contract in accordance with the plans and specifications within the Contract Time.

At any given date, the ratio of the accumulated monetary value of that part of the work actually accomplished to the total contract bid amount adjusted to reflect approved increases or decreases shall determine the "percent complete" of the work.

The Contractor's progress will be determined monthly at the time of each progress estimate and will be based on the percentage of money earned by the Contractor compared to the percentage of elapsed time.

The percentage of money earned will be determined by comparing the total money earned to-date by the Contractor, minus any payment for advancement of materials, to the total dollar amount of the contract. The percentage elapsed time shall be calculated as a direct ratio of the expired Calendar Days to the total Calendar Days provided for in the contract.

When the "percent complete" lags more than 20 percent behind the "percentage of elapsed time", the Contractor shall immediately submit a written statement and revised progress schedule indicating any additional equipment, labor, materials, etc. to be assigned to the work to ensure completion within the specified contract time. When the "percent complete" lags more than 40 percent behind the "percentage of elapsed time", the contract may be terminated.

907-108.06.2.2--Extension of Time. The Contractor may, prior to the expiration of the Contract Time, make a written request to the Engineer for an extension of time with a valid justification for the request. The Contractor's plea that insufficient time was specified is not a valid reason for extension of time.

On all completion date contracts, an extension of contract time may be granted for unforeseen

utility delays, abnormal delays caused solely by the State or other governmental authorities, or unforeseeable disastrous phenomena of nature of the magnitude of earthquakes, hurricanes, named tropical storms, tornadoes, or flooded essential work areas which are deemed to unavoidably prevent prosecuting the work.

The span of time allowed in the contract as awarded is based on the quantities used for comparison of bids. If satisfactory fulfillment of the contract requires performance of work in greater quantities than those set forth in the proposal, the time allowed for completion shall be increased in Calendar Days in the same ratio that the cost of such added work, exclusive of the cost of work altered by Supplemental Agreement for which a time adjustment is made for such altered work in the Supplemental Agreement, bears to the total value of the original contract unless it can be established that the extra work was of such character that it required more time than is indicated by the money value.

Any extension of contract time will be based on a calendar day basis, excluding Saturdays, Sundays or legal holidays recognized by the Department in Subsection 108.04.1.

If the contract time of the project is extended into a season of the year in which completion of certain items of work would be prohibited or delayed because of seasonal or temperature limitations, the Engineer may waive the limitations provided the completion of the work will not result in a reduction in quality. When determined that the completion of the out-of-season items will cause a reduction in the quality of the work, the completion of the project will be further extended so the items may be completed under favorable weather conditions. In either case, the Engineer will notify the Contractor in writing.

Liquidated damages as set forth in Subsection 907-108.07 under the heading "Daily Charge Per Calendar Day" in the Table titled "Schedule of Deductions for Each Day of Overrun in Contract Time", shall be applicable to each calendar day after the specified completion date, or authorized extension thereof, and until all work under the contract is completed.

907-108.06.2.3--Cessation of Contract Time. When the Engineer by written notice schedules a final inspection, time will be suspended until the final inspection is conducted and for an additional 14 calendar days thereafter. If after the end of the 14-day suspension all necessary items of work have not been completed, time charges will resume. If the specified completion date had not been reached at the time the Contractor called for a final inspection, the calendar day difference between the specified completion date and the date the Contractor called for a final inspection will be added after the 14-day period before starting liquidation damages. If a project is on liquidated damages at the time a final inspection is scheduled, liquidated damages will be suspended until the final inspection is conducted and for seven (7) calendar days thereafter. If after the end of the 7-day suspension all necessary items of work have not been completed, liquidated damages will resume. When final inspection has been made by the Engineer as prescribed in Subsection 105.16 and all items of work have been completed, the daily time charge will cease.

907-108.07--Failure to Complete the Work on Time. Delete the Schedule of Deductions table in Subsection 108.07 on page 85, and substitute the following.

Schedule of Deductions for Each Day of Overrun in Contract Time

Original Contract Amount		Daily Charge
From More Than	**To and Including**	**Per Calendar Day**
$ 0	100,000	$ 150
100,000	500,000	360
500,000	1,000,000	540
1,000,000	5,000,000	830
5,000,000	10,000,000	1,200
10,000,000	20,000,000	1,800
20,000,000	----------	3,500

907-108.10--Termination of Contractor's Responsibility. In the last sentence of Subsection 108.10 on page 88, change "bond" to "performance and payment bond(s)".

MISSISSIPPI DEPARTMENT OF TRANSPORTATION

SPECIAL PROVISION NO. 907-109-8 **CODE: (SP)**

DATE: 09/10/2015

SUBJECT: Measurement and Payment

Section 109, Measurement and Payment, of the 2004 Edition of the Mississippi Standard Specifications for Road and Bridge Construction is hereby amended as follows.

907-109.01--Measurement of Quantities. Delete the third full paragraph of Subsection 109.01 on page 90 and substitute the following.

When requested by the Contractor, material specified to be measured by the cubic yard or ton may be converted to the other measure as appropriate. Factors for this conversion will be determined by the District Materials Engineer and agreed to by the Contractor. The conversion of the materials along with the conversion factor will be incorporated into the contract by supplemental agreement. The supplemental agreement must be executed before such method of measurement is used.

After the second sentence of the fourth full paragraph of Subsection 109.01 on page 90, add the following.

Where loose vehicle measurement (LVM) is used, the capacity will be computed to the nearest one-tenth cubic yard and paid to the whole cubic yard. Measurements greater than or equal to nine-tenths of a cubic yard will be rounded to the next highest number. Measurements less than nine-tenths of a cubic yard will not be rounded to the next highest number. Example: A vehicle measurement of 9.9 cubic yards will be classified as a 10-cubic yard vehicle. A vehicle measurement of 9.8 cubic yards will be classified as a 9-cubic yard vehicle.

907-109.04--Extra and Force Account Work. Delete the first paragraph under Subsection 109.04 on page 91, and substitute the following.

When extra work results for any reason and is not handled as prescribed elsewhere herein, the Engineer and the Contractor will attempt to agree on equitable prices. When such prices are agreed upon, a Supplemental Agreement will be issued by the Engineer.

When the Supplemental Agreement process is initiated, the Contractor will be required to submit to the Engineer a detailed breakdown for Material, Labor, Equipment, Profit and Overhead. The total allowable markup (which includes Prime Contractor and Subcontractor work, if applicable) for Supplemental Agreement work shall not exceed 20%, which also includes tax and bond.

The requirement for detailed cost breakdowns may be waived when a Department's Bid Item History exists for the proposed item(s), and the Contractor's requested price, including mark-up, is within 20% of the Department's Bid History cost for that item(s). In any case, the Department reserves the right to request detailed cost breakdowns from the Contractor on any Supplemental Agreement request.

When equitable prices cannot be agreed upon mutually by the Engineer and the Contractor, the Engineer will issue a written order that work will be completed on a force account basis to be compensated in the following manner:

In the last sentence of subparagraph (b) in Subsection 109.04 on page 91, change "bond" to "bond(s)".

Delete the first and second paragraphs of subparagraph (d) in Subsection 109.04 on page 92 and substitute the following.

Equipment. For any machinery or special equipment, other than small tools, authorized by the Engineer, the Contractor will use the rates shown in the book entitled "Rental Rate Blue Book For Construction Equipment" as published by EquipmentWatch® and is current at the time the force account work is authorized, unless otherwise allowed by the Engineer. This book shall be used to determine equipment ownership and operating expense rates. These rates do not include allowances for operating labor, mobilization or demobilization costs, overhead or profit, and do not represent rental charges for those in the business of renting equipment. Operating labor and overhead cost will be allowed. Subject to advance approval of the Engineer, actual transportation cost for a distance of not more than 200 miles will be reimbursed for equipment not already on the project. The cost of transportation after completion of the force account work will be reimbursed except it cannot exceed the allowance for moving the equipment to the work.

907-109.06--Partial Payment.

907-109.06.1--General. Delete the fourth and fifth sentences of the third paragraph of Subsection 109.06.1 on page 94, and substitute the following.

In the event mutual agreement cannot be reached, the Contractor will be allowed a maximum of 25 calendar days following the Contractor's receipt of the monthly estimate in question to file in writing, a protest Notice of Claim in accordance with the provisions Subsection 105.17. Otherwise, the Engineer's estimated quantities shall be considered acceptable pending any changes made during the checking of final quantities.

907-109.06.2--Advancement on Materials. Delete Subsection 109.06.2 on pages 94 & 95, and substitute the following.

907-109.06.2--Advancement on Materials. Partial payments may include advance payment for certain nonperishable or durable materials such as base aggregates, reinforcing steel, bridge piling, structural steel, prefabricated bridge components, traffic signal equipment, electrical equipment, fencing materials, and sign materials with approval of the Engineer. Advance payment may be requested for structural steel members provided fabrication has been completed and the members have been declared satisfactory for storage by a Department representative. The Contractor must make a written request to the Project Engineer for advanced payment and furnish written consent of the Surety. To qualify for advance payment, materials must be stored or stockpiled on or near the project or at other locations approved by the Engineer; or in the case of precast concrete members, treated timber, guard posts and other approved preprocessed durable and bulky materials, the materials may be stored at the commercial producer's yard provided it is located in Mississippi; or in the case of prestressed concrete members that may

require being produced at an out-of-state location, the prestress members shall be produced and may be stored at the commercial manufacturer's yard provided it is a PCI certified plant on the Department's List of Approved Prestress & Precast Plants and it is located within the continental United States; or in the case of structural steel members that may require fabrication at an out-of-state location, the fabricated members may be stored at the location of the commercial fabricator's yard provided it is located within the continental United States.

Advancements will not be allowed until the Project Engineer has received copies of material invoices and certified test reports or acceptable certificates of conformance, and in the case of materials stored at the commercial producer's/fabricator's yard, the material shall be positively identified for the specific project and a Certificate of Storage issued by the Department or a designated representative of the Department. Requests for advancements on fabricated structural steel members and prestress concrete members stored out-of-state will be denied when the Department does not have available a designated representative to issue a Certificate of Storage.

The Contractor shall make suitable arrangements to the satisfaction of the Engineer for storage and protection at approved sites or, in the case of materials stored at the commercial producer's yard located in Mississippi or, in the case of fabricated structural steel members stored at the commercial fabricator's yard or prestress concrete members stored at a commercial manufacturer's yard located within the continental United States, the Contractor shall make arrangements with the producer/fabricator for suitable storage and protection. If advanced payment is allowed and the materials are damaged, lost, destroyed or for any reason become unacceptable, the previous payments will be deducted from subsequent estimates until the materials are replaced or restored to an acceptable condition. In all cases, the Contractor shall save harmless the Commission in the event of loss or damage, regardless of cause.

An invoice or an accumulation of invoices for each eligible material must total $10,000 or more before consideration will be given for making advanced payment. When allowed, advance payment will be based on verified actual material cost plus transportation charges to the point of storage. Sales tax, local haul and handling costs shall not be included as material cost.

Advanced payment shall not exceed 100% of the invoice price or 75% of the total contract bid price for the pay item, whichever is less.

Advanced payment for a component of a pay item shall not exceed 95% of the invoice price or 75% of the total contract bid price for the pay item of which the material is a part, whichever is less.

Advanced payment will be made only on materials that will be incorporated permanently in the project.

No advanced payment will be made on minor material items, hardware, etc.

No advanced payment will be made for materials when it is anticipated that those materials will be incorporated into the project within 60 calendar days.

Advanced payment will be paid for those materials which are not readily available, and which can be easily identified and secured for a specific project and for which lengthy stockpiling periods would not be detrimental.

Where a storage area is used for more than one project, material for each project shall be segregated from material for other projects, identified, and secured. Adequate access for auditing shall be provided. All units shall be stored in a manner so that they are clearly visible for counting and/or inspection of the individual units.

Unless specifically provided for in the contract, advance payment will not be made on materials, except for fabricated structural steel members or prestress concrete members, stored or stockpiled outside of the State of Mississippi.

Materials for which an advanced payment has been allowed must be paid for by the Contractor within 60 days of the estimate on which the advanced payment was first allowed and proof of said payment must be verified by the supplier. If proof of payment is not furnished within the allowable 60 days, the advanced payment will be deducted on subsequent current estimates until such time proof of payment is furnished.

As the materials are incorporated into the work, proportionate reductions for advance payments shall be made from monthly estimates covering the work performed. Calculation of percentage of completion, or rate of progress, shall be based on completed work and no consideration will be given to stockpiled materials.

907-109.07--Changes in Material Costs. Delete the third full paragraph of Subsection 109.07 on page 96 and substitute the following.

A link to the established base prices for bituminous products and fuels will be included in the contract documents under a Notice to Bidders entitled "Petroleum Products Base Prices."

Delete the last paragraph of Subsection 109.07 on pages 97 & 98, and substitute the following.

Adjustments herein provided shall not apply to fuels consumed or materials incorporated into the work during any monthly estimate period falling wholly after the expiration of contract time as defined in Subsection 101.02 of the applicable Mississippi Standard Specifications for Road and Bridge Construction, and as determined by checked final quantities.

MISSISSIPPI DEPARTMENT OF TRANSPORTATION

SPECIAL PROVISION NO. 907-216-1 **CODE: (IS)**

DATE: **05/22/2013**

SUBJECT: **Solid Sodding**

Section 216, Solid Sodding, of the 2004 Edition of the Mississippi Standard Specifications for Road and Bridge Construction is hereby amended as follows.

907-216.04--Method of Measurement. Delete the third and fourth paragraphs of Subsection 216.04 on page 144.

907-216.05--Basis of Payment. Delete the first paragraph of Subsection 216.05 on pages 144 and 145, and substitute the following.

Solid sodding will be paid for at the contract unit price per square yard, which price shall be full compensation for all labor, equipment, materials, tools, ground preparation, fertilization, and all incidentals necessary to complete the work.

Add the "907" prefix to the pay items listed on page 145.

MISSISSIPPI DEPARTMENT OF TRANSPORTATION

SPECIAL PROVISION NO. 907-225-5 **CODE: (SP)**

DATE: **02/10/2016**

SUBJECT: **Grassing**

Section 225, Grassing, of the 2004 Edition of the Mississippi Standard Specifications for Road and Bridge Construction is hereby amended as follows.

Delete Section 225 on pages 158 thru 163, and substitute the following.

SECTION 907-225--GRASSING

907-225-01--Description. This work consists of furnishing, transporting, placing, plant establishment, and all work, including ground preparation, fertilizing, seeding, and mulching, necessary to produce a satisfactory and acceptable growth of grass.

At the Contractor's option, seeds and mulch may be incorporated using a hydraulically applied method under certain limitations. When hydraulically applied, it shall be performed in accordance with the requirements and methods addressed in Section 227. Under no circumstances shall fertilizer be incorporated hydraulically.

907-225.02--Materials.

907-225.02.1--Fertilizers. Fertilizers for purposes of this specification shall be understood to include standard manufactured products consisting of single or combination ingredients and agricultural limestone.

All fertilizer shall comply with the State fertilizer laws, Subsection 715.02, and the requirements of this specification.

907-225.02.2--Seeds. Seeds shall meet the requirements of Subsection 715.03, subject to the provisions of this subsection. The Contractor shall acquire seed from persons registered with the Mississippi Department of Agriculture and Commerce.

Except for the germination requirements, bags of seeds properly labeled or tagged according to law and indicating characteristics meeting or exceeding the requirements of Subsection 715.03 will be acceptable for planting.

The Contractor should provide adequate dry storage facilities for seeds, and shall furnish access to the storage for sampling stored seed.

907-225.02.3--Mulch.

907-225.02.3.1--Vegetative Mulch. The vegetative materials for mulch shall meet the

requirements of Subsection 215.02.

907-225.02.3.2--Hydraulically Applied Mulch (Hydromulch). Fibers for hydromulch shall be produced from wood, straw, cellulose, natural fibers, or recycled fibers which are free of non-biodegradable substances. The fiber shall disperse into a uniform slurry when mixed with water. Fibers shall be colored green, or other approved contrasting color, and shall not stain concrete or other surfaces. The use of tacifiers or activators will be allowed.

Hydromulch shall be listed on the Department's "Approved Sources of Materials".

907-225.02.3.2.1--Wood Fiber Mulch. Wood fiber mulch shall be made from wood chip particles manufactured particularly for discharging uniformly on the ground surface when dispersed by a hydraulic water sprayer. It shall remain in uniform suspension in water under agitation and blend with grass seed and fertilizer to form a homogeneous slurry. The fibers shall intertwine physically to form a strong moisture-holding mat on the ground surface and allow rainfall to percolate the underlying soil. The fiber material shall be heat processed so as to contain no germination or growth-inhibiting factors. The mulch shall be dyed an appropriate color to facilitate the application of material using non-toxic dye.

907-225.02.3.2.2--Cellulose Fiber Mulch. Cellulose fiber mulch consist of recycled paper stock products which are shredded into small pieces particular for application by hydraulic seeding equipment. It shall mix readily and uniformly under agitation with water and blend with grass seed and fertilizer to form a homogeneous slurry. When applied to the ground surface, the material shall form a strong moisture-holding mat, allow rainfall to percolate the underlying soil, and remain in place until the grass root system is established. The material shall contain no growth inhibiting characteristic or organisms. The mulch shall be dyed an appropriate color to facilitate the application of material using non-toxic dye.

907-225.02.3.2.3--Wood/Cellulose Fiber Mulch. Wood/cellulose fiber mix hydroseeding mulch shall consist of a combination of the above wood and cellulose fibers at a ratio recommended by the manufacturer of the products.

907-225.02.3.2.4--Straw Mulch. Straw mulch shall consist of a natural straw fiber. This material shall be a minimum 90% straw and essentially free from plastic materials or other non-bio degradable substances. The material shall be disperse into a uniform mulch slurry when mixed with water.

907-225.02.3.2.5--Tackifier. The tackifier will serve the purpose of an adhesive to form a bond between the soil, fiber, and seed particles. It will also allow the soil to retain moisture. The tackifier shall be of the organic or synthetic variety.

907-225.03--Construction Requirements.

907-225.03.1--Ground Preparation. Ground preparation, light or standard, consists of plowing, loosening, and pulverizing the soil to form suitable beds for erosion control items in reasonably close conformity with the established lines and grades without appreciable humps or depressions. When grassing an area that has been previously planted with temporary grassing, a standard ground preparation will be required. The previously planted grasses shall be disked, tilled,

plowed, etc. to assure that the existing temporary grasses are thoroughly mixed into the soil.

Any equipment used for ground preparation shall be approved units suitable to perform the work and subject to the requirements of Subsection 108.05.

The Contractor shall take full advantage of weather and soil conditions, and no attempt shall be made to prepare soil when it is wet or in a condition which will not allow the soil to be properly tilled.

Light ground preparation should be used on areas where seeding is required to improve the coverage of partially vegetated areas.

Standard ground preparation should be used on areas designated to be solid sodded and unvegetated areas designated to be seeded.

Aerating, moistening, or otherwise bringing the soil to a suitable condition for ground preparation shall be considered as incidental to the work and will not be measured for separate payment.

907-225.03.1.1--Light Ground Preparation. Light ground preparation consists of scratching the surface with a close-tooth harrow, disk-harrow, or similar equipment. The depth of scratching should be at least three-quarters inch but not deep enough to damage existing grasses of the type being planted.

907-225.03.1.2--Standard Ground Preparation. Standard ground preparation consists of plowing or disk-harrowing and thoroughly pulverizing the areas immediately before the application of erosion control (vegetative) items. Unless otherwise specified, the pulverized and prepared seedbed should be at least four inches deep and shall be reasonably free of large clods, earthballs, boulders, stumps, roots and other objectionable matter. Incorporation of fertilizer and ground preparation may be performed simultaneously.

907-225.03.2--Fertilizing. Fertilizing consists of furnishing, transporting, spreading, and incorporating fertilizers. The Contractor shall furnish all equipment necessary to properly handle, store, uniformly spread, and incorporate the specified application of fertilizer.

The Contractor shall incorporate 13-13-13 commercial fertilizer at the rate indicated in the vegetation schedule in the plans. The equivalent rate of other type fertilizers will be allowed if the equivalent percentages of Nitrogen, Phosphorus and Potassium are obtained. The Contractor shall incorporate agricultural limestone at the rate indicated in the vegetation schedule in the plans. Fertilization shall be applied uniformly on the areas to be planted or seeded and uniformly incorporated into the soil.

Fertilizers should be applied on individual areas of not more than three (3) acres.

All fertilizer should be incorporated within 24 hours following spreading.

907-225.03.3--Seeding. Seeding consists of furnishing and planting seeds in a prepared seedbed, covering the seeds, and providing plant establishment on all areas seeded.

Prior to planting the seeds, ground preparation and fertilizing shall be satisfactorily performed.

The required type of seeds, minimum rates of application, and planting dates of seeds are shown in the vegetation schedule in the plans.

It is the Contractor's responsibility to apply an ample amount of each type of seed to produce a satisfactory growth of grass and of the seed type required. At the completion of the project, a satisfactory growth of grass will be required. Reference Section 210 for satisfactory growth and coverage of dormant seed.

Seeding should not be done during windy weather or when the ground is frozen, extremely wet, or in a condition which will not allow the soil to be properly tilled.

907-225.03.3.1--Conventional Application. Legume seeds should be treated in accordance with Subsection 715.03.4 immediately before sowing. Seeds should be uniformly sown over the entire area with mechanical seeders. Seeds of different sizes may necessitate separate sowing. When legume seeds become dry, they should be re-inoculated.

All seeds should be covered lightly with soil by raking, rolling, or other approved methods, and the area compacted with a cultipacker.

Mulching should be performed as soon as practicable after seeding.

907-225.03.3.2--Hydroseeding Application. Seeds may be applied using the hydroseeding method except during the months of June, July, August, and September. During these months, the seeding shall be incorporated in accordance with the above Conventional Application method.

The seed(s) shall be combined into a distribution tank with all required ingredients on the project site. The application of the seed(s) and all ingredients shall be performed in one operation.

Mulching should be performed simultaneously with or as soon as practicable after seeding.

907-225.03.3.3--Plant Establishment. The Contractor should provide plant establishment on all areas seeded until release of maintenance. At the completion of the project, a satisfactory growth of grass will be required. The Contractor should reference Subsection 210 for satisfactory growth and coverage of dormant seed.

Plant establishment should be provided for a minimum period of 45 calendar days after completion of seeding. In the event satisfactory growth and coverage has not been attained by the end of the 45-day period, plant establishment should be continued until a satisfactory growth and coverage is provided for at least one kind of plant as referenced in Section 210. The Contractor shall perform plant establishment on all areas of temporary seeding until the Engineer determines that the temporary seeding has served its purpose.

Plant establishment shall consist of preserving, protecting, watering, reseeding, mowing, and other work necessary to keep the seeded areas in satisfactory condition.

Areas requiring reseeding should be prepared and seeded and all other work performed as if the reseeding was the initial seeding. The types and application rates of fertilizer will be at the discretion of the Contractor.

907-225.03.3.4--Growth and Coverage. It shall be the Contractor's responsibility to provide satisfactory growth and coverage of grasses, legumes, or combination produced from the specified seeding.

Growth and coverage on seeded areas will be considered to be in reasonably close conformity with the intent of the contract when the type of vegetation specified, exclusive of that from seeds not expected to have germinated and shows growth at that time, has reached a point of maturity where stems or runners overlap adjacent similar growth in each direction over the entire area.

907-225.03.4--Mulching. Mulching consists of furnishing, transporting, and placing mulch on slopes, shoulders, medians, and other designated areas. Unless otherwise noted in the contract or directed by the Engineer, the Contractor has the option to place mulch by the conventional method or by the hydraulic method.

907-225.03.4.1--Vegetative Mulch.

907-225.03.4.1.1--Equipment. Mulching equipment should be capable of maintaining a constant air stream which will blow or eject controlled quantities of mulch in a uniform pattern.

Mulch stabilizers should consist of dull blades or disks without camber and approximately 20 inches in diameter. The disks should be notched, should be spaced at approximately 8-inch intervals, and should be equipped with scrapers. The stabilizer should weigh approximately 1000 to 1200 pounds, should have a working width of no more than eight feet, and should be equipped with a ballast compartment, so that weight can be increased.

907-225.03.4.1.2--Placement of Vegetative Mulch. Mulching should be placed uniformly on designated areas within 24 hours following seeding unless weather conditions are such that mulching cannot be performed. Placement should begin on the windward side of areas and from tops of slopes. In its final position, the mulch should be loose enough to allow air to circulate but compact enough to partially shade the ground and reduce erosion.

The baled material should be loosened and broken thoroughly before it is fed into the machine to avoid placement of unbroken clumps.

907-225.03.4.1.3--Anchoring Mulch. The mulch should be anchored by using a mulch stabilizer when not hydraulically applied. If a mulch stabilizer is used, the mulch should be punched into the soil for a minimum depth of one inch.

When mulch stabilizers are used, anchoring the mulch should be performed along the contour of the ground surface.

907-225.03.4.2--Hydromulch. Hydromulch shall be applied in accordance with the installation instructions and recommendations of the manufacturer. Hydromulch shall be uniformly applied

at the manufacturer's recommended application rate. In no case shall the application rate be less than one (1) ton per acre.

907-225.03.4.3--Protection and Maintenance. The Contractor should maintain and protect mulched areas until the Release of Maintenance of the project. The Contractor should take every precaution to prevent unnecessary foot and vehicular traffic.

The Contractor should mow, remove or destroy any undesirable growth on all areas mulched as soon as any undesirable growth appears. This will prevent competition with the desired plants and to prevent reseeding of undesirable growth.

907-225.03.5--Hydro Equipment. The equipment for hydraulically applying seed and mulch shall have a built-in agitation system with an operating capacity sufficient to agitate, suspend, and homogeneously mix slurry of the specified amount of fiber, seed, and water. The slurry distribution lines shall be large enough to prevent stoppage. The discharge line shall be equipped with a set of hydraulic spray nozzles, which will provide even distribution of the slurry on the various areas to be seeded.

The mixture shall all be combined into the slurry tank for distribution of all ingredients in one operation as specified herein. The materials shall be combined in a manner recommended by the manufacturer. The slurry mixture shall be so regulated that the amounts and rates of application shall result in a uniform application of all materials at rates not less than the amounts specified. Using the color of the mulch as a guide, the equipment operator shall spray the prepared seedbed with a uniform visible coat. The slurry shall be applied in a sweeping motion, in an arched stream, so as to fall like rain, allowing the mulch to build upon each other until an even coat is achieved.

907-225.03.6--Vegetation Schedule. When a vegetation schedule is not shown in the plans or when the contract does not have an official set of plans, the following application rates shall be used, unless otherwise noted or approved by the Engineer.

Agricultural Limestone	1,000 pounds per acre	March 1 to September 1
13-13-13 Commercial Fertilizer	250 pounds per acre	March 1 to September 1
Vegetative Materials	2 tons per acre	
Bermudagrass	80 pounds per acre	March 1 to September 1
	20 pounds per acre	September 1 to March 1 *
Bahiagrass	80 pounds per acre	March 1 to September 1
	25 pounds per acre	September 1 to March 1
Tall Fescue	25 pounds per acre	March 1 to September 1
	100 pounds per acre	October 1 to March 1 **
Sericea Lespedeza	25 pounds per acre	March 1 to September 1
	25 pounds per acre	September 1 to March 1
Crimson Clover	20 pounds per acre	August 1 to April 1

* 80 pounds per acre in District 3 Delta
** 25 pounds per acre in District 3 Delta

907-225.04--Method of Measurement. Grassing will be measured by the acre. Acceptance will be based on a satisfactory growth and coverage of seeds planted.

Acceptable quantities of agricultural limestone will be measured by the ton.

Acceptable quantities for mulch will be measured by the ton. For vegetative mulch, the weight for measurement will be the product of the number of bales acceptably placed and the average weight per bale as determined on approved scales provided by the Contractor. Anchoring of vegetative mulch will not be measured for separate payment. The cost of anchoring shall be absorbed in the prices bid for other items of work. For hydromulch, the weight for measurement will be the dry weight of the packaged fibers used in the mixture. No payment will be allowed for water, additives, tackifier, or other liquids used in the mixture.

907-225.05--Basis of Payment. Grassing, measured as prescribed above, will be paid for at the contract unit price per acre, which will be full compensation for all required materials including seeding and fertilizers other than limestone, ground preparation, equipment, labor, testing and all work necessary to establish a satisfactory growth of grass.

Hard rock agricultural limestone will be paid for at the contract unit price per ton. Hard rock agricultural limestone with a relative neutralizing value (RNV), determined in accordance with Subsection 907-715-02.2.1.3, of between 60.0% and 62.9% will be paid for at half (½) the contract unit price per ton. No payment will be made for hard rock agricultural limestone with an RNV less than 60.0%.

Mulch, measured as prescribed above, will be paid for at the contract unit price per ton, which price shall be full compensation for all materials, equipment, labor, and incidentals necessary to complete the work.

Payment will be made under:

907-225-A:	Grassing	- per acre
907-225-B:	Agricultural Limestone	- per ton
907-225-C:	Mulch, Vegetative Mulch	- per ton
907-225-D:	Mulch, Hydromulch	- per ton

MISSISSIPPI DEPARTMENT OF TRANSPORTATION

SPECIAL PROVISION NO. 907-227-10 **CODE: (IS)**

DATE: 01/25/2012

SUBJECT: Hydroseeding

Section 907-227, Hydroseeding, is hereby added to and made part of the 2004 Edition of the Mississippi Standard Specifications for Road and Bridge Construction as follows:

SECTION 907-227--HYDROSEEDING

907-227.0l--Description. This work consists of furnishing, transporting, placing, plant establishment and all work necessary to produce a satisfactory and acceptable growth of grass. The seeds, fertilizers, tackifier, and mulch shall be incorporated using the hydroseeding process. These items shall be combined into a mixture and force-applied to the areas to be grassed.

907-227.02--Materials. The Contractor shall, prior to application, furnish the Engineer with invoices of all materials used in the grassing operation.

907-227.02.1--Fertilizers. Fertilizers for purposes of these specifications shall be understood to include standard manufactured products consisting of single or combination ingredients.

All fertilizers shall comply with the State fertilizer laws and Subsection 715.02.

907-227.02.2--Seeds. Seeds shall meet the requirements of Subsection 715.03, subject to the provisions of this subsection. The Contractor shall acquire seed from persons registered with the Mississippi Department of Agriculture and Commerce.

Except for the germination requirements, bags of seeds properly labeled or tagged according to law and indicating characteristics meeting or exceeding the requirements of Subsection 715.03 will be acceptable for planting.

The Contractor should provide adequate dry storage facilities for seeds, and shall furnish access to the storage for sampling stored seed.

907-227.02.3--Mulching. The rate of application of fiber mulch shall be as recommended by the manufacture of the fibers mulch.

907-227.02.3.1--Wood Fiber Mulch. Wood fiber mulch shall be made from wood chip particles manufactured particularly for discharging uniformly on the ground surface when dispersed by a hydraulic water sprayer. It shall remain in uniform suspension in water under agitation and blend with grass seed and fertilizer to form a homogeneous slurry. The fibers shall intertwine physically to form a strong moisture-holding mat on the ground surface and allow rainfall to percolate the underlying soil. The fiber material shall be heat processed so as to

contain no germination or growth-inhibiting factors. The mulch shall be dyed an appropriate color to facilitate the application of material using non-toxic dye.

907-227.02.3.2--Cellulose Fiber Mulch. Cellulose fiber mulch consist of recycled paper stock products which are shredded into small pieces particular for application by hydraulic seeding equipment. It shall mix readily and uniformly under agitation with water and blend with grass seed and fertilizer to form a homogeneous slurry. When applied to the ground surface, the material shall form a strong moisture-holding mat, allow rainfall to percolate the underlying soil, and remain in place until the grass root system is established. The material shall contain no growth inhibiting characteristic or organisms. The mulch shall be dyed an appropriate color to facilitate the application of material using non-toxic dye.

907-227.02.3.3--Wood/Cellulose Fiber Mulch. Wood/cellulose fiber mix hydroseeding mulch shall consist of a combination of the above wood and cellulose fibers at a ratio recommended by the manufacturer of the products.

907-227.02.3.4--Straw Mulch. Straw mulch shall consist of a natural straw fiber. This material shall be a minimum 90% straw and essentially free from plastic materials or other non-bio degradable substances. The material shall be disperse into a uniform mulch slurry when mixed with water.

907-227.02.3.5--Tacifier. The tackifier will serve the purpose of an adhesive to form a bond between the soil, fiber, and seed particles. It will also allow the soil to retain moisture.

The tackifier shall be of the organic or synthetic variety.

907-227.03--Construction Requirements.

907-227.03.1--Ground Preparation. Light ground preparation consists of plowing, loosening, and pulverizing the soil to form suitable beds for seeding items in reasonably close conformity with the established lines and grades without appreciable humps or depressions. Unless otherwise specified, the pulverized and prepared seedbed should be at least four inches deep and shall be reasonably free of large clods, earth balls, boulders, stumps, roots and other objectionable matter. The Engineer may eliminate or alter the requirements for ground preparation due to site conditions.

907-227.03.2--Fertilizing. The Contractor shall furnish all equipment necessary to properly handle, store, uniformly spread, and incorporate the specified application of fertilizer.

The Contractor shall incorporate bag fertilizer at a rate of 1000 pounds per acre of 13-13-13 commercial fertilizer. The equivalent rate of other type fertilizers will be allowed if the equivalent percentages of Nitrogen, Phosphorus and Potassium are obtained. Any changes in the type or rate of application of the fertilizers shall be approved by the Engineer prior to being incorporated.

Agricultural limestone will be incorporated into the area and paid for in accordance with Section 213 of the Standard Specifications.

907-227.03.3--Seeding.

907-227.03.3.1--General. The Contractor shall use the vegetation schedule in the plan for the correct types of seed and application rates, unless otherwise noted or approved by the Engineer.

When a vegetation schedule for permanent grass is not shown in the plans, the following types of seed and application rates shall be used, unless otherwise approved by the Engineer.

Bermudagrass ----------	20 pounds per acre
Bahiagrass ----------	25 pounds per acre
Tall Fescue ----------	15 pounds per acre
Crimson Clover ----------	20 pounds per acre

At the completion of the project, a satisfactory growth of grass will be required. The Contractor should reference Subsection 210 for satisfactory growth and coverage of dormant seed.

907-227.03.3.2--Plant Establishment. The Contractor should provide plant establishment on all areas seeded until release of maintenance. Plant establishment shall consist of preserving, protecting, watering, reseeding, mowing, and other work necessary to keep the seeded areas in satisfactory condition.

Plant establishment should be provided for a minimum period of 45 calendar days after completion of seeding. In the event satisfactory growth and coverage has not been attained by the end of the 45-day period, plant establishment should be continued until a satisfactory growth and coverage is provided for at least one kind of plant. The Contractor should reference Section 210 of the Standard Specifications for more information.

907-227.03.3.3--Growth and Coverage. It shall be the Contractor's responsibility to provide satisfactory growth and coverage of grasses, legumes, or combination produced from the specified seeding.

Growth and coverage on seeded areas will be considered to be in reasonably close conformity with the intent of the contract when the type of vegetation specified, exclusive of that from seeds not expected to have germinated and shows growth at that time, has reached a point of maturity where stems or runners overlap adjacent similar growth in each direction over the entire area.

Final acceptance of the project will not be made until a satisfactory growth of grass has been acknowledged by the Engineer.

907-227.03.4--Mulching. At the Contractor's option, mulch may be wood fiber, cellulose fiber, a mixture of wood and cellulose fibers, or straw fiber. The mulch shall be applied at the rate recommended by the manufacturer in a mixture of water, seed and fertilizer. Any changes in the rate of application of the mulch shall be approved by the Engineer prior to its use.

907-227.03.5--Equipment. Hydraulic equipment shall be used for the application of fertilizers, seeds and slurry of the prepared mulch. This equipment shall have a built-in agitation system with an operating capacity sufficient to agitate, suspend, and homogeneously mix slurry of the specified amount of fiber, fertilizer, seed and water. The slurry distribution lines shall be large enough to prevent stoppage. The discharge line shall be equipped with a set of hydraulic spray nozzles, which will provide even distribution of the slurry on the various areas to be seeded.

The seed, fertilizer, mulch and water shall all be combined into the slurry tank for distribution of all ingredients in one operation as specified herein. The materials shall be combined in a manner recommended by the manufacturer. The slurry mixture shall be so regulated that the amounts and rates of application shall result in a uniform application of all materials at rates not less than the amounts specified. Using the color of the mulch as a guide, the equipment operator shall spray the prepared seedbed with a uniform visible coat. The slurry shall be applied in a sweeping motion, in an arched stream, so as to fall like rain, allowing the mulch to build upon each other until an even coat is achieved.

907-227.03.6--Protection and Maintenance. The Contractor should maintain and protect seeded areas until release of maintenance of the project. The Contractor should take every precaution to prevent unnecessary foot and vehicular traffic.

The Contractor should mow or otherwise remove or destroy any undesirable growth on all areas mulched to prevent competition with the desired plants and to prevent reseeding of undesirable growth.

907-227.04--Method of Measurement. Hydroseeding, complete and accepted, will be measured by the acre. No separate payment will be made for ground preparation, seeds, fertilizers, or mulch. Acceptance will be based on a satisfactory growth and coverage of seeds planted.

Agricultural limestone shall be measured and paid for under Section 213 of the Standard Specifications.

907-227.05--Basis of Payment. Hydroseeding, measured as prescribed above, will be paid for at the contract unit price per acre, which will be full compensation for all required materials, equipment, labor, testing and all work necessary to establish a satisfactory growth of grass.

Payment will be made under:

907-227-A: Hydroseeding - per acre

MISSISSIPPI DEPARTMENT OF TRANSPORTATION

SPECIAL PROVISION NO. 907-228-2 **CODE: (SP)**

DATE: **10/29/2015**

SUBJECT: **Erosion Control Blanket**

Section 907-228, Erosion Control Blanket, is hereby added to and made a part of the 2004 Edition of the Mississippi Standard Specifications for Road and Bridge Construction as follows.

SECTION 907-228 - EROSION CONTROL BLANKET

907-228.01--Description. This work consists of furnishing, placing, and maintaining a Erosion Control Blanket (ECB) of the type specified on seeded or other designated areas in accordance with the plans and specifications.

907-228.02--Materials. The erosion control blankets shall be a temporary, organic and/or inorganic re-vegetative blanket with non-organic, photodegradable or biodegradable netting. The netting shall be bonded sufficiently to the parent material to prevent separation of the net from the parent material for the life of the product. For those blankets that have netting attached, the netting and stitching shall be photodegradable and/or biodegradable. The photodegradable stitching shall be of the same material with similar properties as the netting such that the expected degradation periods are the same. The weight of the netting shall not exceed 15% of the total blanket weight.

The Contractor will be permitted to furnish and install a multi-width blanket with seams securely bonded by stapling, staking, stitching, or other methods meeting the approval of the Engineer.

The erosion control blanket must be one from the Department's current "List of Approved Sources" for the type indicated.

907-228.02.1--Blanket Types. There are four types of erosion control blankets.

Type I blankets shall be a processed degradable natural and/or polymer fibers mechanically bound together by a single rapidly degrading, synthetic or natural fiber netting or an open weave textile of processed rapidly degrading natural or polymer yarns or twines woven into a continuous matrix.

Type II blankets shall be a processed degradable natural and/or polymer fibers mechanically bound together between two rapidly degrading, synthetic or natural fiber nettings.

Type III blankets shall be an erosion control blanket composed of processed slow degrading natural or polymer fibers mechanically bound together between two slow degrading synthetic or natural fiber nettings to form a continuous matrix or an open weave textile composed of processed slow degrading natural or polymer yarns or twines woven into a continuous matrix.

Type IV blankets shall be an erosion control blanket composed of processed slow degrading natural or polymer fibers mechanically bound together between two slow degrading synthetic or natural fiber nettings to form a continuous matrix or an open weave textile composed of processed slow degrading natural or polymer yarns or twines woven into a continuous matrix.

In addition to being on the Department's current "List of Approved Sources", the blankets must meet the following general requirements.

TYPES OF BLANKETS

Type	Maximum Gradient	C Factor *, **	Minimum Tensile Strength ***
I	≤3:l (H:V)	<0.15	50 lbs/ft
II	≤2:1 (H:V)	<0.20	75 lbs/ft
III	≤1.5:1 (H:V)	<0.25	100 lbs/ft
IV	≤1:1 (H:V)	<0.25	125 lbs/ft

* "C" Factor calculated as the ratio of soil loss from the ECB protected slope (tested at specified or greater gradient, h:v) to the ratio of soil loss from unprotected (control) plot in large-scale testing.

** Acceptable large-scale test methods may include ASTM Designation: D 6459, or other independent testing deemed acceptable by the Engineer.

*** Minimum Average Roll Values using ASTM Designation: D 6818.

907-228.02.2--Stakes. Unless otherwise specified by the manufacturer of the erosion control blanket, stakes used to secure the blanket shall be one of the following.

1) a double prong "U" shaped wire staple made from 11-gauge or heavier steel wire with an approximate length of eight inches (8") after bending,
2) a biodegradable anchoring device meeting the requirements of ASTM Designation: D 5338, or
3) an equal approved by the Engineer.

907-228.02.3--Acceptance Procedure. Prior to use, the Contractor must furnish the Engineer three copies of the manufacturer's certification for each shipment of erosion control blanket material stating the number of rolls furnished and that the material in the shipment conforms to the same composition as that listed on the Department's current "List of Approved Sources".

When wire staples are used, also furnish the Engineer three copies of a certification from the manufacturer or distributor stating the wire size for staples for each shipment.

The certifications by the manufacturer or distributor will be prima facie evidence of the materials meeting the requirements of the specifications.

907-228.03--Construction Requirements. The Contractor shall furnish and install protective covering blankets for erosion control on prepared areas of slopes at locations shown on the plans or designated by the Engineer.

Erosion control blankets shall be installed according to manufacturer recommendation or install according to the detail plan sheet. The design plan sheet is to be used as a guide in lieu of the manufacture recommendations.

907-228.03.1--Site Preparation. The area to receive the erosion control blanket should be fine graded to a smooth profile and relatively free from all weeds, clods, stones, roots, sticks, or other foreign material that may prevent the blanket from bearing completely on the surface. Any voids on the slope shall be filled and properly compacted.

Any seeded areas damaged or destroyed during placement of the erosion blanket shall be reseeded as specified for the original seeding at no additional costs to the State.

907-228.03.2--Trench Preparation. An anchor trench shall be prepared at the top of the slope by excavating a trench six inches deep by six inches wide. The erosion control blanket shall be anchored into the trench by staking on 1-foot centers. The stakes shall be driven at least flush with the soil surface. The anchor trench shall be backfilled and compacted with soil. A minimum of three feet shall be allowed from the anchor trench to the crest of the slope.

A similar anchor trench shall be installed at the bottom of the slope to terminate the installation. The trench shall be installed similar to the above except the erosion control blanket shall be rolled 24 inches past the toe of the slope. The terminal end of the erosion control blanket shall be staked on 1-foot centers.

On long slopes, an intermediate anchor trench shall be installed at 50-foot intervals.

907-228.03.3--Placement of Blanket. Starting at the crest of the slope, the erosion control blanket shall be rolled down the slope in a controlled manner. Approximately every 25 feet, the erosion control blanket shall be pulled to take out any excess slack. The goal is to have the erosion control blanket contour and initiate full contact with the soil.

The typical installation will require one stake placed at 3-foot to 5-foot intervals along the vertical length of the erosion control blanket. Stakes shall be staggered 18 to 24 inches horizontally across the erosion control blanket. If the erosion control blanket needs to be spliced in the middle of a slope, the erosion control blanket shall be "shingled" with up-slope erosion control blanket overlapping the down-slope erosion control blanket. There should be a minimum of six inches of overlap in a splice. The joint splice shall be made by placing a row of stakes six inches on center and then placing a second row of stakes six inches on center, staggered from the first row. All overlaps and the edges shall be secured with stakes. All longitudinal and transverse laps shall be a minimum 6-inch joint with the upgrade section on top. All transverse laps shall be staked with two staggered rows of stakes on 6-inch centers. All longitudinal laps shall be stakes with two staggered rows on 3-foot to 5-foot centers. The staking shall firmly anchor the fabric netting to the soil surface.

On the downstream end of blankets adjoining a structure, the anchor trench shall be omitted and the material folded six inches and butted tightly against the structure and one row of stakes installed

on six-inch centers. An edge adjacent to a paved ditch shall be butted tightly against the paved ditch and a row of stakes installed on 12-inch centers. All stakes shall be driven flush with the soil surfaces.

907-228.03.2--Protection and Maintenance. The Contractor shall maintain and protect the blankets until release of maintenance or until the Engineer has determined that the blankets have served their useful life, whichever occurs first. Maintenance shall consist of repairs necessitated by erosion, rain, wind, fire, or other cause.

907-228.04--Method of Measurement. Erosion control blankets of the type specified will be measured by the square yard of surface area covered. Any over width of material installed wider than ordered, laps, and anchor slots will not be measured for payment.

907-228.05--Basis of Payment. Erosion control blankets, measured as prescribed above, will be paid for at the contract unit price per square yard and shall be full compensation for all materials, equipment, labor, maintenance and all work necessary to complete the work.

Payment will be made under:

907-228-A: Erosion Control Blanket, Type - per square yard

MISSISSIPPI DEPARTMENT OF TRANSPORTATION

SPECIAL PROVISION NO. 907-230-11 **CODE: (SP)**

DATE: 11/24/2014

SUBJECT: Tree and Shrub Planting

Section 230, Tree and Shrub Planting, of the 2004 Edition of the Mississippi Standard Specifications for Road and Bridge Construction is hereby amended as follows.

907-230.2--Materials. Delete Subsection 230.02.14 on page 165 and substitute the following:

907-230.02.14--Mulch. Tree Bark Mulch shall meet the requirements of Subsection 907-233.02.

907-230.02.15--Bed Edging. Bed edging shall be steel edging, 3/16-inch by 4-inch in size, green in color with steel stakes, manufactured by Ryerson, an Inland Steel Company, St. Louis, Mo., or an approved equal.

907-230.03--Construction Requirements.

907-230.03.7--Planting, Backfilling, and Watering. After the first paragraph of Subsection 230.03.7 on page 166, add the following:

Plant pits are plant bed areas which are bound all around by bed edging and/or paving, or as noted on the drawings. Bed preparation shall be required within plant pits, which shall consist of stripping the proposed bed area of existing grass or plant material, unless designated to remain; removal and disposal of existing soil in order that finished grade of bed, not including surface mulch, is no higher than surrounding grades/pavement edges unless noted otherwise on the drawings; spreading a 4-inch layer of Tree Bark Mulch, Type III throughout the area, and tilling in the Tree Bark Mulch, Type III to a depth of six inches uniformly throughout the area; and excavating plant holes in accordance with this special provision. The entire bed area shall receive Tree Bark Mulch, Type V as a surface mulch.

Within plant pits, additional Tree Bark Mulch, Type III for each tree, shrub and groundcover plant hole is not necessary beyond the uniform layer of application tilled into the soil as noted on the vegetation schedule. Within each tree and shrub plant hole within a plant pit, backfill with a 50/50 mix of existing soil amended with Type III mulch and topsoil. Groundcover plant holes do not require any other backfill material other than the amended existing soil with Type III mulch incorporated.

Backfill for tree and shrub plant holes outside of plant pits shall be a 50/50 mix of existing soil and topsoil, after applying the 4-inch layer of Tree Bark Mulch, Type III.

907-230.04--Method of Measurement. After the sixth paragraph of Subsection 230.04 on page 169, add the following:

Bed edging, complete in place and accepted, will be measured per linear foot. Excavation, backfilling, and miscellaneous fittings will not be measured for separate payment.

Bed preparation within plant pits, complete in place and accepted, will be measured per square foot. Stripping of existing vegetation, excavation of existing soil, and weeding will not be measured for separate payment.

Tree Bark Mulch will be measured for payment in accordance with Subsection 233.04.

Delete the last five paragraphs of Subsection 230.04 on pages 169 & 170 regarding the sequence for measurement of payment and substitute the following:

Measurement for payment will be made in the following sequence:

When plants have been planted and are in a healthy condition in accordance with the contract, seventy-five percent (75%) of the bid price for that species of plant material meeting the requirements of the contract will be allowed.

When the inspection of plants at the end of the growing season has been conducted and the replacement of any dead or unsatisfactory plant material has been made, ninety percent (90%) of the bid price for that species of plant material meeting the requirements of the contract will be allowed.

When the final inspection of the project has been conducted and the replacement of any dead or unsatisfactory plant material has been made, and upon final release of maintenance, one-hundred percent (100%) of the bid price will be allowed for plant material meeting the requirements of the contract.

The Plant Establishment Period shall begin upon the date that the Engineer determines plant material installation has been acceptably completed, including staking/guying and mulching, and continues through the dates noted below:

PLANT ESTABLISHMENT PERIOD

Date of Installation Completion, From and Including	Establishment Period Beyond Installation Completion, (Growing Season) To and Including
August 2nd - November 1st	240 calendar days
November 2nd - January 1st	180 calendar days
January 2nd - May 1st	120 calendar days
May 2nd - August 1st	90 calendar days

Where feasible in the opinion of the Engineer, the Contractor may install plant material well in advance of project completion, in order that the Plant Establishment Period may run concurrent

with the Contract Time. However, no matter what date the Plant Establishment Period concluded, the Contractor will be required to maintain healthy plants until final inspection of the entire project.

No contract time or liquidated damages will be charged during the plant establishment period if, and only if, all items of work on the project have been completed.

907-230.05--Basis of Payment. After the first paragraph of Subsection 230.05 on page 170, add the following:

Accepted quantities for bed edging and bed preparation will be paid for at the contract unit price per linear foot and square foot, respectively. Prices paid shall be full compensation for completing the work.

Delete the pay items list at the end of Subsection 230.05 on page 170, and substitute the following.

907-230-A:	Shrub Planting, Description	- per each
907-230-B:	Tree Planting, Description	- per each
907-230-C:	Bed Edging	- per linear foot
907-230-D:	Bed Preparation	- per square foot

MISSISSIPPI DEPARTMENT OF TRANSPORTATION

SPECIAL PROVISION NO. 907-233-1 **CODE: (SP)**

DATE: 02/01/2005

SUBJECT: Tree Bark Mulch

Section 233, Mulch for Woody Plant Material, of the 2004 Edition of the Mississippi Standard Specifications for Road and Bridge Construction is hereby amended as follows.

907-233.02--Materials. After the first paragraph of Subsection 233.02 on page 176, add the following:

Tree Bark Mulch, Type III used for plant pits (multiple plants in one bed area) and plant holes outside of plant pit areas shall meet the requirements of Subsection 715.07. Tree Bark Mulch, Type V used for the surface mulching plant holes and plant pits shall be shredded cedar, cypress, pine, or hardwood bark strip (pole peelings), commercial type, with no pieces larger than 1½ inches across the surface. Once or twice hammered material is not acceptable for Tree Bark Mulch, Type V. The Contractor shall submit samples of all mulches to the Engineer and receive approval prior to delivery to site.

907-233.04--Method of Measurement. After the first paragraph of Subsection 233.04 on page 176, add the following:

Tree Bark Mulch, Type III, complete in place and accepted, will be measured per cubic yard for tree plant holes and for shrub plant holes outside of plant pit areas.

Tree Bark Mulch, Type V, complete in place and accepted, will be measured per cubic yard for tree and shrub plant holes outside of plant pit areas requiring bed preparation; and in unplanted areas where the mulch is utilized as a surface treatment. Tree Bark Mulch, Type V within plant pit areas will not be measured for payment.

907-233.05--Basis of Payment. After the first paragraph of Subsection 233.04 on page 176, add the following:

Accepted quantities for Tree Bark Mulch, Type V used as a surface mulch for tree and shrub plant holes not within plant pit areas, and in unplanted areas as a surface treatment will be paid for at the contract unit price per cubic yard. Prices paid shall be full compensation for completing the work.

Delete the first pay item listed on page 176, and substitute the following:

907-233-A: Tree Bark Mulch, Type - per cubic yard

MISSISSIPPI DEPARTMENT OF TRANSPORTATION

SPECIAL PROVISION NO. 907-234-5 **CODE: (SP)**

DATE: **09/23/2010**

SUBJECT: **Siltation Barriers**

Section 234, Silt Fence, of the 2004 Edition of the Mississippi Standard Specifications for Road and Bridge Construction is hereby amended as follows.

907-234.01--Description. Delete the first paragraph of Subsection 234.01 on page 177 and substitute the following:

This work consists of furnishing, constructing and maintaining a water permeable filter type fence, inlet siltation guard or turbidity barrier for the purpose of removing suspended soil particles from the water passing through it in accordance with the requirements shown on the plans, directed by the Engineer and these specifications. Fence, inlet siltation guards and turbidity barriers measured and paid as temporary shall be removed when no longer needed or permanent devices are installed.

Delete the first sentence of the second paragraph of Subsection 234.01 on page 177 and substitute the following:

It is understood that measurement and payment for silt fence, inlet siltation guards, and turbidity barriers will be made when a pay item is included in the proposal.

907-234.02--Materials. After the first paragraph of Subsection 234.02 on page 177, add the following:

Inlet siltation guards shall be listed on the Department's "Approved Sources of Materials".

Turbidity barriers shall be one of the following, or an approved equal.

1. SiltMax Turbidity Barrier by Dawg, Inc., 1-800-935-3294, www.dawginc.com
2. Turbidity Barrier by IWT Cargo-Guard, Inc., 1-609-971-8810, www.iwtcargoguard.com
3. Turbidity Curtain by Abasco, LLC, 1-281-214-0300, www.abasco.net

Chain link fence and hardware for super silt fence shall meet the requirements of Section 607, as applicable. Geotextile for super silt fence shall meet the requirements of Subsection 714.13 for a Type II Woven fabric.

907-234.03--Construction Requirements. After the last paragraph of Subsection 234.03.1 on page 178, add the following:

Super Silt Fence. Super silt fence shall be constructed in accordance with the plans and these specifications.

All posts shall be installed/driven so that at least 34 inches of the post will protrude above the ground. The chain link wire and geotextile shall be stretched taut and securely fastened to the posts as shown on the plans. The bottom edge of the fence and geotextile shall be buried at least eight inches below ground surface to prevent undermining. When splicing of the geotextile is necessary, the fabric shall be overlapped approximately 18 inches.

907-234.03.1.1--Placement of Inlet Siltation Guards and Turbidity Barriers. The inlet siltation guards and turbidity barriers shall be constructed at the locations shown on the erosion control plans. Inlet siltation guards and turbidity barriers shall be installed in accordance with the erosion control drawings in the plans. A copy of the manufacturer's instructions for placement of inlet siltation guards and turbidity barriers shall be provided to the Engineer prior to construction.

907-234.03.2--Maintenance and Removal. At the end of the first paragraph of Subsection 234.03.2 on page 178, add the following:

The Contractor shall maintain the inlet siltation guards. The geotextile shall be removed and replaced when deteriorated to such extent that it reduces the effectiveness of the guard. Replacement geotextile shall be the same type and manufacture as the original. Excessive accumulations against the guard shall be removed and disposed of at a location approved by the Engineer.

The Contractor shall maintain the turbidity barriers. Excessive accumulations against the turbidity barrier shall be removed and disposed of at a location approved by the Engineer.

Delete the second paragraph of Subsection 234.03.2 on page 178 and substitute the following:

Unless otherwise directed, all temporary silt fences, inlet guards and turbidity barriers shall be removed. Upon removal, the Contractor shall remove and dispose of any excess silt accumulations, shape the area to the line, grade, and cross section shown on the plans and vegetate all bare areas in accordance with the contract requirements. The temporary fence, inlet guard materials and turbidity barriers will remain the property of the Contractor and may be used at other locations provided the materials are acceptable to the Engineer.

After Subsection 234.03.2 on page 178, insert the following:

907-234.03.3--Resetting Inlet Siltation Guards and Turbidity Barriers. When inlet siltation guards and turbidity barriers are no longer needed at one location, they may be removed and reset at other needed locations. The Engineer may allow the resetting of siltation guards and turbidity barriers upon an inspection and determination that the siltation guards (frame and geotextile) and turbidity barriers are adequate for their intended purpose. When they have to be stored until needed at another location, payment for resetting will not be made until they are reset at their needed location.

907-234.04--Method of Measurement. Delete the sentence in Subsection 234.04 on page 178, add the following:

Silt fence and super silt fence will be measured by the linear foot.

Inlet siltation guard and resetting siltation guards will be measured per each. Turbidity barrier will be measured per linear foot.

907-234.05--Basis of Payment. Delete the sentence in Subsection 234.05 on page 178, add the following:

Silt fence and super silt fence, measured as prescribed above, will be paid for at the contract unit price per linear foot which shall be full compensation for completing the work.

Inlet siltation guard, resetting inlet siltation guards, and turbidity barrier, measured as prescribed above, will be paid for at the contract unit price per each or linear foot, which shall be full compensation for furnishing, constructing, and maintaining the work and for the removal and disposal of all items comprising the devices.

After the last pay item listed on page 178, add the following:

907-234-C:	Super Silt Fence	- per linear foot
907-234-D:	Inlet Siltation Guard	- per each
907-234-E:	Reset Inlet Siltation Guard	- per each
907-234-F:	Turbidity Barrier	- per linear foot

MISSISSIPPI DEPARTMENT OF TRANSPORTATION

SPECIAL PROVISION NO. 907-237-4 **CODE: (SP)**

DATE: 03/13/2012

SUBJECT: Wattles

Section 907-237, Wattles, is hereby added to and made a part of the 2004 Edition of the Mississippi Standard Specifications for Road and Bridge Construction as follows.

SECTION 907-237 - WATTLES

907-237.01--Description. This work consists of furnishing, constructing and maintaining wattles for the retention of soil around inlets, swale areas, small ditches, sediment basins and other areas as necessary. Also, the work includes removing and disposing of the wattles and silt accumulations.

Measurement and payment for wattles will be made only when a pay item is included in the bid schedule of the proposal. The quantity is estimated for bidding purposes only and will be dependent upon actual conditions which occur during construction of the project.

907-237.02--Materials. Wattles used around inlets shall have a diameter of twelve inches (12") and a length adequate to meet field conditions. Wattles used at other locations shall have a diameter of twenty inches (20") and a length adequate to meet field conditions. The minimum diameter for the above wattle sizes shall be one inch (1") less than the specified diameter.

The stakes used in securing the wattles in place shall be placed approximately three feet (3') apart throughout the length of the wattle. Stakes shall be wooden and of adequate size to stabilize the wattles to the satisfaction of the Engineer.

In addition to the requirements of this specifications, wattles shall be listed on the Department's "Approved Sources of Materials".

907-237.03--Construction Requirements.

907-237.03.1--General. The wattles shall be constructed at the locations and according to the requirements shown on the erosion control plan.

907-237.03.2--Maintenance and Removal. The Contractor shall maintain the wattles and remove and dispose of silt accumulations.

When the wattles are no longer needed, they shall be removed and the Contractor shall dispose of silt accumulations and treat the disturbed areas in accordance with the contract requirements.

907-237.04--Method of Measurement. Wattles of the size specified will be measured per linear foot.

907-237.05--Basis of Payment. Wattles, measured as prescribed above, will be paid for at the contract unit price per linear foot, which price shall be full compensation for installation, maintaining and removal of the wattles, the removal and disposal of silt accumulations and any required restoration of the disturbed areas.

Payment will be made under:

907-237-A: Wattles, Size - per linear foot

MISSISSIPPI DEPARTMENT OF TRANSPORTATION

SPECIAL PROVISION NO. 907-240-2 **CODE: (SP)**

DATE: 08/28/2013

SUBJECT: Interlocking Flexible Block Erosion Control System

Section 907-240, Interlocking Flexible Block Erosion Control System, is added to and becomes a part of the 2004 Edition of the Mississippi Standard Specifications for Road and Bridge Construction as follows:

SECTION 907-240 -- INTERLOCKING FLEXIBLE BLOCK EROSION CONTROL SYSTEM

907-240.01--Description. This work consists of installing a cellular concrete interlocking erosion control grid system in accordance with the requirements of this specification and to the line, grade and dimensions shown on the plans, or as directed by the Engineer.

907-240.02--Materials. The erosion control system shall be a multi-directional, positive-interlocking type mat and, when installed, shall exhibit the ability to expand and contract with the underlying terrain.

The erosion control system shall be one of the following, or an approved equal.

Conlock II	**Armorflex**	**UltraLok**
by: Hydropave L.P.	by: Armortec	by: Submar
www.hydropave.com	www.armortec.com	www.submar.com

Any product submitted for approval as an equal to one of the above products shall be submitted at least forty five (45) days prior to use.

The geotextile shall be Type V meeting the requirements of Subsection 714.13.

907-240.03--Construction Requirements. Areas on which geotextile and the erosion control system are to be placed shall be constructed to the lines and grades shown on the plans. Where such areas are below the allowable grade, it shall be brought to grade by placing layers not to exceed eight inches (8”) of selected material and compacted as directed by the Engineer. All obstructions such as, but not limited to, roots, lumps and projecting objects shall be removed and any resulting voids filled to the satisfaction of the Engineer

907-240.03.1--Geotextile. The geotextile shall be placed loosely without wrinkles or creases with the long dimension perpendicular to the channel. The strips shall be placed to provide a minimum overlap of two feet (2’). Securing pins shall be inserted through both strips of overlapped geotextile at mid-point and not greater than 2-foot intervals. Additional pins shall be installed throughout the geotextile as necessary to prevent any slippage. The geotextile shall be

placed so that the upstream strip overlaps the downstream strip and the higher slope strip overlaps the lower strip. Each securing pin shall be pushed through the geotextile until the washer bears against the geotextile and secures it firmly.

The geotextile shall be protected from contamination and damage during installation and placement of the erosion control system. Contaminated geotextile shall be replaced, and damaged geotextile shall be repaired or replaced as directed at no cost to the Department.

The geotextile shall be covered with a layer of the specified material within 14 calendar days after placement. Geotextile not covered within this time period shall be removed and replaced at the Contractor's expense if damage or deterioration is evident, as determined by the Engineer.

907-240.03.2--Erosion Control System. The erosion control system shall be placed within the limits shown on the plans. The erosion control system shall be placed individually on the geotextile in such a manner as to produce a continually interlocking surface free from field seams and non-interlocked connections, except as approved by Project Engineer and/or as shown on the plans.

Anchoring trenches, if required, shall be as shown on the plans or recommended by the manufacturer.

Open cell blocks that are below the normal waterline and exhibit an average open area greater than 5%, shall be backfilled with crushed stone as approved by Project Engineer. Open cell blocks that are above the normal waterline shall be backfilled with material approved by Engineer to a minimum depth of 35% of the specified block vertical thickness above the top surfaces.

907-240.04-Method of Measurement. Interlocking flexible block erosion control system will be measured by the square yard of surface area covered.

No separate measurement will be made for geotextile or backfilling the erosion control system.

907-240.05--Basis of Payment. Interlocking flexible block erosion control system, measured as prescribed above, will be paid for at the contract unit price per square yard, which price shall be full compensation for all labor, equipment, furnishing and placing the erosion control system, backfilling geotextile, pins, lapping, sewing, maintaining the geotextile until covered, and incidentals required to satisfactorily completing the work.

Payment will be made under:

907-240-A: Interlocking Flexible Block Erosion Control System - per square yard

MISSISSIPPI DEPARTMENT OF TRANSPORTATION

SPECIAL PROVISION NO. 907-246-3 **CODE: (SP)**

DATE: 11/08/2010

SUBJECT: Sandbags and Rockbags

Section 907-246, Sandbags and Rockbags, is hereby added to and made a part of the 2004 Edition of the Mississippi Standard Specifications for Road and Bridge Construction as follows.

SECTION 907-246 -- SANDBAGS AND ROCKBAGS

907-246.01--Description. This item of work shall consist of the furnishing, installing, and maintaining sandbags and rockbags for the purpose of temporary erosion control by intercepting and slowing the flow of sediment-laden runoff water, or for use as a temporary dam.

907-246.02--Materials. The filler material for sandbags shall consist of a fine aggregate meeting the requirements of Subsection 703.02. The filler material for rockbags shall consist of a size 57 aggregate meeting the requirements of Subsection 703.03.

The bag material shall be woven polypropylene, polyethylene or polyamide fabric with a minimum unit weight of four (4) ounces per square yard. The bags shall be a minimum of 21 inches in length, 12 inches in width, and four (4) in thickness when filled.

907-246.03--Construction Requirements. Sandbags and rockbags shall be used to construct a berm/dam which will intercept sediment-laden storm water runoff from disturbed areas, create a retention pond, detain sediment, and release water in sheet flow. Sand or rock shall be placed in the bag so that at least the top six (6) inches of the bag is unfilled to allow for proper tying of the open end. Any subsequent rows of bags shall be offset one-half the length of the preceding row to provide a layered brick-type arrangement.

The sandbag and rockbag berm/dam installation shall be maintained in good condition by the Contractor. All necessary work and materials to maintain the integrity of the installation shall be provided until earthwork construction is complete and permanent erosion-control features are in place. The maintenance of the bags will not be paid for separately and will be included in the cost for sandbags or rockbags.

907-246.04--Method of Measurement. Sandbags and rockbags will be measured per linear foot or each.

Sandbags and rockbags measured by the linear foot shall be in accordance with the details in the erosion control drawing. The length of the sandbag or rockbag berm/dam will be measured end-to-end along the cross-section of the ditch in accordance with the erosion control drawing.

907-246.05--Basic of Payment. Sandbags and rockbags, measured as prescribed above, will be

paid for per linear foot or each, which prices shall be full compensation for furnishing bags, fine aggregate, size 57 aggregate, placement of bags, maintenance of the installation, removal and disposal of the sediment deposits and removal after construction has been completed, and for all labor, tools, equipment and incidentals necessary to complete the work.

Payment will be made under:

907-246-A:	Sandbags	- per linear foot or each
907-246-B:	Rockbags	- per linear foot or each

MISSISSIPPI DEPARTMENT OF TRANSPORTATION

SPECIAL PROVISION NO. 907-249-1 **CODE: (SP)**

DATE: 03/01/2011

SUBJECT: Riprap for Erosion Control

Section 907-249, Riprap for Erosion Control, is hereby added to and made a part of the 2004 Edition of the Mississippi Standard Specifications for Road and Bridge Construction as follows.

SECTION 907-249 -- RIPRAP FOR EROSION CONTROL

907-249.01--Description. Riprap for erosion control consists of furnishing and installing riprap for the purpose of temporary erosion control by intercepting and slowing the flow of sediment-laden runoff water, or for use as a temporary dam. It also includes the maintenance and removal of riprap when no longer needed.

Remove and reset riprap consists of the removal and relocation of riprap to other locations shown on the plans, directed by the Engineer, or indicated on the Contractor's Erosion Control Plan.

Riprap shall be installed in accordance with the specifications in reasonably close conformity with the locations and dimensions shown on the plans or established.

907-249.02--Materials. Stones for riprap shall be Size 100 meeting the requirements of Subsection 705.04.

907-249.03--Construction Requirements. Riprap shall be used to construct a berm/dam which will intercept sediment-laden storm water runoff from disturbed areas, create a retention pond, detain sediment, and release water in sheet flow.

The riprap installation shall be maintained in good condition by the Contractor. All necessary work and materials to maintain the integrity of the installation shall be provided until earthwork construction is complete and permanent erosion-control features are in place. The maintenance of the riprap will not be paid for separately and will be included in the cost for riprap for erosion control.

When required, existing riprap may need to be removed and reset at other locations. These locations may be for additional temporary erosion control or may be placed in permanent locations designated by the Engineer.

907-249.04--Method of Measurement. Riprap for erosion control will be measured per ton. Remove and reset riprap shall be measured per cubic yard, FM.

907-249.05--Basis of Payment. Riprap for erosion control, measured as prescribed above, will

be paid for per ton, which prices shall be full compensation for furnishing, installation, maintenance of the installation, and removal/disposal after construction has been completed; and for all labor, tools, equipment and incidentals necessary to complete the work.

Remove and reset of riprap, measured as prescribed above, will be paid for per cubic yard, which prices shall be full compensation for loading, transporting, installing, maintenance of the new installation, and removal/disposal after construction has been completed; and for all labor, tools, equipment and incidentals necessary to complete the work.

Payment will be made under:

907-249-A: Riprap for Erosion Control	- per ton
907-249-B: Remove and Reset Riprap	- per cubic yard

MISSISSIPPI DEPARTMENT OF TRANSPORTATION

SPECIAL PROVISION NO. 907-258-9 **CODE: (SP)**

DATE: **07/23/2009**

SUBJECT: **Miscellaneous Site Amenities**

Section 907-258, Miscellaneous Site Amenities, is hereby added to and made a part of the 2004 Edition of the Mississippi Standard Specifications for Road and Bridge Construction.

SECTION 907-258 -- MISCELLANEOUS SITE AMENITIES

907-258.01--Description. This item shall consist of constructing and installing concrete picnic tables and benches, wooden picnic tables and benches, charcoal grills, drinking fountains, trash receptacles, water hydrants, sewage dump station, cast stone benches, sign (masonry and stone), metal benches, bollards, pavilions, survey monument, car stops, cigarette receptacles, and picnic shelters , each complete in place, in accordance with these Specifications and in reasonably close conformity with the locations, lines, grades, configurations, dimensions and other requirements shown on the Drawings or established.

907-258.02--Materials. Unless otherwise stipulated, the materials used in this construction, in addition to the general requirements of these Specifications and the plans shall conform to the provisions and requirements prescribed in the sections of the Standard Specifications for the several items which constitute the complete structure.

All items will require approval by the Engineer from the manufacturer. Contractor shall submit eight (8) copies of brochures or shop drawings for approval prior to ordering manufactured items. Other items may require testing as directed by the Engineer.

A. Charcoal Grill. Charcoal Grill shall be the Model No. 100001085 Rotating Grill with post as manufactured by Iron Mountain Forge, Dumor Site Furnishings – Model No. 22-00, PW Athletic Manufacturing Co. – Model No. 1140-00, or approved equal. Post shall be set within a Class C concrete footing, size as recommended by manufacturer.

B. Drinking Fountain.

1. Waste Pipe. Waste pipe shall be of the size and type as shown on the Drawings and shall be standard PVC drain waste and vent piping.

2. Drain Pipe. Drain pipe shall be the size shown on the Drawings and shall conform to or exceed Commercial Standard CS 272-65 or CS 272.65.

3. Drinking Fountain. The drinking fountain shall be designed similar to the details shown on the Drawings, freeze-proof, and conforming to approved Handicapped Standards by the Engineer.

4. Concrete. Concrete, unless otherwise specified, shall be paid for as sidewalk, and have an approved exposed aggregate finish to match the finish on the adjacent sidewalk.

5. Valves (Stop and Drain). The cut-off valve shall be a standard brass stop and drain cut-off valve of the proper size and type as shown on the plans.

C. Concrete Picnic Table and Benches.

1. Concrete. Concrete for table top, seat top, and end supports shall be Class "A" Concrete. Concrete for table slabs will be paid for as concrete sidewalks - Pay Item No. 608-B.

2. Reinforcing Steel. Reinforcing steel shall conform to Section 711.

3. Paint for Table top and Seats. Paint or coating for table top and seats shall be an approved HP Acrylic Latex paint conforming to or exceeding Master Paint Institute (MPI) numbers, primer MPI # 3 and topcoat MPI #141.

D. Wooden Picnic Tables and Benches. ADA Accessible Wooden Picnic Tables shall be the model number No.100000186, eight feet long with galvanized pipe frame and treated wood top and seats, as manufactured by Iron Mountain Forge, Picnic Table Source – Model No. M115-1061, All Picnic Tables – Model No. UPB158H-PT8, or approved equal.

Picnic tables shall be secured to the concrete with lead shields, anchors, or other means as approved by the Engineer.

E. Trash Receptacle.

1. Trash Receptacle. The trash receptacle shall be Upbeat Site Furnishings Model No. WR32AGBCT, 32-gallon Essence Receptacle Outdoor Trash Can with curved top, rounded corners and stone panels with leveling devices, rigid plastic liner, and hardware to secure the receptacle to the sidewalk, stone panel color shall be Golden Glo. United Receptacle, Inc. – Model No. R-38HT-202, Barco Products – Earth-Tone Panel Commercial Trash Cans, Model No. 38SQSTDMA, or approved equal.

2. Concrete. Concrete, unless otherwise specified, shall be paid for as sidewalk, and have a finish to match the finish on the adjacent sidewalk.

F. Water Hydrant.

1. Water Hydrant. Steel body, self-closing, anti-freezing hydrant with heavy stainless operating springs, with 3/4-inch supply as the model M-175 hydrant as manufactured by Murdock-Super Secur, The Kupferle Foundry Company model Total Eclipse #1 Yard Hydrant, , or approved equal. Color shall be black.

2. Concrete. Concrete, unless otherwise specified, shall be paid for as sidewalk and have same finish as finish on adjacent sidewalk.

3. Valves (Stop and Drain). The cut-off valve shall be standard brass stop and drain cut-off valve of the proper size and type as shown on the Drawings.

G. Travel Trailer Sewage Dump Station (Modifications).

1. Sewage Dump Station. The sewage dump station shall be constructed similar to the details shown on the Drawings, with Schedule 40 galvanized steel pipe and fittings complete with vacuum breaker, and hose, in accordance with the Drawing details, and State Health Department minimum standards.

2. Concrete. Concrete unless otherwise specified shall be Class "B" conforming to Section 804 of the Standard Specifications and have an approved trowel finish.

3. Stand Pipe. Water stand pipe shall be standard galvanized Schedule 40 of the size shown on the Drawings.

4. Vent Pipe. Vent pipe shall be standard galvanized Schedule 40 of the size shown on the Drawings.

5. Signs. The signs shall be designed as shown on the details on the Drawings, constructed of 0.080-inch aluminum or 14 Ga. galvanized steel. The signs shall be manufactured by an approved sign company. The Contractor shall submit shop drawings.

H. Cast Stone Bench. Cast stone benches shall be constructed from the same material or an approved equal material as concrete picnic tables and benches.

I. Sign (Masonry and Stone).

1. Brick and Mortar. Brick and mortar shall be produced by the same manufacturer(s), and be the same type and kind, including bullnose and watertable units, and shall match the existing brick used on the Welcome Center Building, or approved equal.

2. Concrete Masonry Units. The concrete masonry units shall be hollow non-load bearing, light-weight aggregate, concrete masonry units conforming to ASTM Designation: C331-64T. Units shall be normal modular size for typical 3/8-inch mortar joint.

3. Concrete. Concrete, unless otherwise specified, shall be Class "B" conforming to Section 804 of the Standard Specifications.

4. Reinforcing Steel. Reinforcing steel shall conform to Section 711.

5. Precast Architectural Panel.

a. General.

Cement: Portland Cement shall conform to ASTM Designation: C-150, Type I or III.

Fine and coarse aggregate: Fine and coarse aggregate shall conform to ASTM Designation: C-33. Variations from aggregate gradations are permissible for the facing mix.

Reinforcement shall conform to ASTM Designation: C-185 for welded wire fabric.

Hot-dip galvanizing shall conform to ASTM Designation: A-153

Anchoring devices, inserts, etc., shall be either galvanized or corrosion resistant types approved by the Architect and as detailed on the Drawings.

b. Textures and Finishes. Precast architectural concrete shall be honed finish, lightly textured, approximating finish of limestone, with color as selected by the Engineer.

c. Fabrication. Precast architectural concrete shall be sufficiently reinforced to withstand conditions on the sign, including handling and erection stresses. Deformed bars with one inch (1") or less clearance to an exterior face shall be galvanized.

Units shall be fabricated straight, smooth, and true to size and shape, with exposed edges and corners precise and square unless otherwise indicated.

Reglets, slots, holes, and other accessories shall be provided in units to receive cramps, dowels, reglets, waterstops, flashings, and other similar work as indicated.

Arises, inscriptions and details shall be faithfully executed to the Engineer's design.

Each precast item shall be marked to correspond to identification mark on shop drawings.

Location of anchors, inserts and blockouts shall be plus or minus 3/8 inch from center line of location shown on drawings.

Rust-inhibitive coating shall be applied on damaged areas at welded connections, same as shop-applied material. Galvanizing repair coating shall be used on galvanized surfaces.

d. Mixes. Standard 6-inch by 12-inch cylinder strength of precast concrete shall not be less than 5,000 psi at 28 days when tested in accordance with ASTM Designation: C-39.

Absorption shall not be less than three percent (3%) and not more than seven percent (7%) when tested in accordance with ASTM Designation: C-97.

Minimum thickness of facing mix shall be 1½ inches thick. Backup concrete may be made with grey cement and aggregates conforming to requirements for cast-in-place concrete.

e. Joint Material. Joint material shall be as recommended by the precast architectural concrete manufacturer, and as approved by the Engineer.

6. Letters and Symbols. Letters, including custom letters, and symbols shall be brass, in the shapes and sizes noted on the drawings, as manufactured by Metal Arts, A. R. K. Ramos, Matthews, or approved equal.

The Engineer will provide camera ready art work of the symbols and custom letters to the Contractor for the manufacturer.

Method(s) of attaching letters and symbols to precast architectural concrete panel shall be approved by the Engineer.

J. Metal Bench. Garden – Style all – steel bench, six feet long, color – green, as Bench 118 series as manufactured by DuMor, Inc., Highland Products Group – 6-foot 'Sunshine' Thermoplastic-Coated expanded Metal Bench, Columbia Cascade Co. – Manor Bench No. 2824-6, or approved equal.

Metal Bench shall be secured to pavement. Method of securing shall be reviewed with and approved by the Engineer.

K. Bollard. Pipe shall be schedule 40 steel pipe, in the size as noted on the drawings. Finial shall be the Linn Park Ball Finial, as manufactured by Robinson Iron, Tennessee Fabricating Company, Reliance Foundry Co., Ltd., or approved equal. Pipe and finial shall be painted with 1 shop coat of a rust inhibitive primer and two (2) field coats of an oil base exterior paint, color selected by the Engineer. Class B concrete required for pipe infill.

L. Pavilion:

1. Masonry Components, Concrete, and Cast Stone. Masonry components, concrete, and cast stone shall conform to the specifications described in Sign (Masonry and Stone), above.

2. Steel. Steel shall be provided in the shapes, sizes, and fabricated as noted on the Drawings.

Steel shall receive the following paints/ coatings, all as manufactured by PPG, Sherwin Williams, Tnemec Company, Inc., or approved equal, and applied in strict accordance with the manufacturer's written instructions.

PPG Products		
First Shop Coat (primer)	UC65147 Zinc	3.0 – 4.0 Mils Dry Film Thickness
Field Spot Primer (if necessary)	UC65147 Zinc	3.0 – 4.0 Mils Dry Film Thickness
Second Field Coat	94-2800 pitthame*	3.0 – 6.0 Mils Dry Film Thickness
Third Field Coat	94-2800 pitthame*	3.0 – 6.0 Mils Dry Film Thickness

Sherwin Williams Products		
First Shop Coat (primer)	B65G10 Zinc	3.0 – 4.0 Mils Dry Film Thickness
Field Spot Primer (if necessary)	B65G10 Zinc	3.0 – 4.0 Mils Dry Film Thickness
Polyurethane finish		
Second Field Coat	B65-600 Series*	3.0 – 6.0 Mils Dry Film Thickness
Third Field Coat	B65-600 Series*	3.0 – 6.0 Mils Dry Film Thickness
Tnemec Products		
First Shop Coat (primer)	90-97 Tneme Zinc	2.5 – 3.5 Mils Dry Film Thickness
Field Spot Primer (if necessary)	90-97 Tneme Zinc	2.5 – 3.5 Mils Dry Film Thickness
Second Field Coat	74 Endura-Shield*	2.0 – 2.5 Mils Dry Film Thickness
Third Field Coat	74 Endura-Shield*	2.0 – 2.5 Mils Dry Film Thickness

*Color of second and third field coat shall be selected by the Engineer.

3. Metal Roof. Metal roof shall be copper roofing sheet, 16 ounce per square foot, with 1½ inch standing seam "S" lock located 16 inches on center. Contractor shall design fabrication and fastening of the system for an I-60 wind uplift rating, using the purlins as noted on the drawings.

   Product data for materials, and fastening devices as well as shop drawings noting assembly and finished product appearance shall be submitted for review and approval of the Engineer. A minimum of eight (8) copies of each is required.

   Roof panel system shall be guaranteed by the manufacturer for a period of five (5) years.

4. Display Panel. The display panel shall be an exterior rated panel, with a top hinged impact resistant acrylic cover, cylinder lock and gas cylinder cover supports; baked on enamel finish, metal back with magnetic back (interior); for wall mounting, in a 40-inch high by 60-inch wide size, as the Module x Wide Profile as manufactured by ASI Sign Systems, Matthews International Corp., Mohawk Sign Systems, Inc., or approved equal.

   Color of panel shall be selected by the Engineer.

   Mounting of panel to metal work shall be reviewed with and approved by the Engineer.

M. Survey Monument.

1. Masonry Components and Concrete. Masonry components and concrete shall conform to the specifications described in Sign (Masonry and Stone), above.

2. Granite. Polished (finish) granite veneer, in the thickness as noted on the drawings. Color shall be selected by the Project Engineer. Method of attachment to masonry and devices for attachment shall be reviewed with and approved by the Engineer.

N. Car Stop. Car stops shall be six (6) foot long concrete curb (car) stops. Curb stops shall be secured to pavement with two (2) No. 3 reinforcing bars, 24 inches long.

O. Cigarette Receptacle. Cigarette Receptacles shall be Aladdin Smoker' Station – Model Number R1639E-HCHAR- steel smokers' station, 39 inches high by 16 inches diameter, color – Hammertone Charcoal, as manufactured by Gilmore-Kramer Company, Johnson Environmental Products –Smokers Outpost-black Model Number 710101 , Ashtrays And Urns – Smoker' Station Model Number LL144-1645 , or approved equal.

Cigarette Receptacle shall be secured to pavement with anchoring kit. Method of securing shall be reviewed with and approved by the Engineer.

P. Picnic Shelter:

1. Building Type. Building shall be Icon HIP 16 x 24T as manufactured by Icon Shelter Systems Inc., American Building Products "Navajo Shelters", Litchfield Industries "Pittsburg Hip End", or approved equal.

2. Concrete. Concrete shall conform to the specifications described in Sign (Masonry and Stone), above.

3. Description. Picnic shelter shall be 16 feet by 24 feet galvanized steel frame hipped rectangle shelter with standard 24 gage Multi-rib metal roof panels, overhead "Linear" ornaments and square stepped base columns.

4. Submittals. Product data for materials, color charts and fastening devices as well as shop drawings noting assembly and finished product appearance shall be submitted for review and approval of the Engineer.

5. Steel Framing and Finishes. Steel framing, columns, base covers and overhead ornaments shall receive hot-dipped zinc galvanizing prior to finish. A double coat of TGIC polyester powder coating shall be applied. Color shall be "Surrey Beige", unless another color is selected by the Engineer from manufacturer's standard 14 colors

6. Base Connection. Base connection shall be surfaced mounted with base covers.

7. Metal Roof Materials. Metal roof material shall be standard 24 gage Galvalume® Multi-rib roof panels with Kynar 500 finish. Color "Copper Penny", or other color selected by the Engineer. Design fabrication and fastening of system for an UL 90 wind uplift rating. Roof pitch shall be 4:12, unless noted otherwise on Drawings.

8. Warranty. Product shall carry a manufacturer's standard 10-year warranty

907-258.03--Construction Requirements. The method of construction, unless otherwise stipulated, shall conform to the provisions and requirements where applicable, prescribed in the standard specifications with the additions shown hereafter. All work shall be performed in a

good workmanlike manner, to the satisfaction of the Engineer.

A. Charcoal Grill. The charcoal grill with concrete footing shall be installed in accordance with the manufacturer's written instructions in the locations as noted on the Drawings.

B. Drinking Fountain. The drinking fountain shall be installed by skilled plumbers, concrete finishers, and workmen in an approved manner to the satisfaction of the Engineer, to the dimensions and details shown on the Drawings, or approved by the Engineer.

The fountain drain shall be located to drain to the existing drain field or an approved ditch as directed by the Engineer.

The concrete base shall be constructed as shown on the Drawings or as directed by the Engineer. The concrete will be paid for under separate pay item for that class of concrete.

C. Concrete Picnic Tables and Benches. Concrete picnic tables and benches shall be constructed to the detailed dimensions shown on the Drawings. The handling and placing of concrete shall conform to Subsection 804.10. The top and edge surfaces of the table and benches shall receive a slick smooth finish.

The concrete shall be free of honeycomb and air pockets and in no case have a slump greater than one and one-half inches.

The ground under the slab shall be graded or shaped and compacted when necessary to insure a smooth, firm foundation for the slab. The ground adjacent to the slab shall be sloped to drain away from the slab in a manner so as to preserve the natural shape of the terrain as close as possible.

The concrete slab shall be poured around the table and benches in place and correctly aligned. Care shall be taken to place the expansion joint material around the top and bench supports as shown on the plans in a neat, secure manner. The slab shall be sloped to drain and receive an approved exposed aggregate finish to match the finish on the sidewalk.

The placing and fastening of reinforcement shall conform to Subsection 805.05.

The table shall be located as shown on the Drawings and as directed by the Engineer.

D. Wooden Picnic Tables and Metal Benches. Wooden picnic tables and metal benches shall be located and secured in an approved manner as shown on the Drawings and as directed by the Engineer.

E. Trash Receptacle. The trash receptacle shall be installed on and secured to a square concrete pad four inches thick, with outside dimensions six inches greater than the width of the trash receptacle, in locations designated by the Engineer.

The excavation when required to place the trash receptacle into the ground shall be disposed of as directed by the Engineer.

The concrete shall be placed and finished to match the adjacent sidewalk. On locations adjacent to existing sidewalks, top of concrete pad for the receptacle shall meet flush with existing walk. Slope elevation of pads no more than 1/8 inch per foot in order that water will not stand.

The method to secure the trash receptacle to the concrete pad shall be submitted to the Engineer for approval.

F. Water Hydrant. Install water hydrant in accordance with the manufacturer's written instructions and the Drawings.

G. Travel Trailer Sewage Dump Station. The travel trailer sewage dump station shall be constructed by skilled plumbers, concrete finishers, and workmen in an approved manner to the satisfaction of the Engineer, to the details and dimensions shown on the Drawings.

H. Cast Stone Bench. The cast stone benches shall be a similar design and size as shown on the Drawings. Brochures or shop drawings shall be submitted.

The benches shall be secured to the sidewalk or bench pad in an approved manner with epoxy cement or other approved cement, to the satisfaction of the Engineer.

I. Sign (Masonry and Stone), Pavilion, and Survey Monument. The excavation required to place the sign and survey monument into the ground shall be disposed of as directed by the Engineer.

The concrete base shall be constructed as shown on the Drawings or as directed by the Engineer. The placing and fastening of reinforcement shall conform to Subsection 805.05.

Concrete Masonry Unit and Brick construction shall be in accordance with Section 611, and to the satisfaction of the Engineer.

Precast architectural concrete panels shall be set straight, plumb, level, and square. Exposed facings shall be cleaned to remove dirt and stains which may be on the units after erection and completion of joint treatments. Panels shall be washed and rinsed in accordance with precast manufacturer's recommendations. Other work shall be protected from damage due to cleaning operations. Do not use cleaning materials or processes which could change the character of exposed concrete finishes.

Letters and symbols shall be attached in accordance with the Drawings, approved shop drawings, and to the satisfaction of the Engineer.

Pavilion and survey monument shall be constructed straight, plumb, level, and square, in accordance with the drawings and to the satisfaction of the Engineer. Welds shall be grinded smooth prior to painting/ coatings application.

J. Metal Bench. Metal bench shall be located where noted on the Drawings. Metal bench shall

be secured to pavement as approved by the Engineer.

K. Bollard. Bollards shall be constructed plumb and in accordance with the drawings to the satisfaction of the Engineer. Welds shall be ground smooth prior to painting/ coatings application.

N. Car Stop. Drive reinforcing bars through holes in car stop and through new asphalt pavement. Top of reinforcing bar shall be driven to a point 1/4 inch below the top of the car stop.

O. Cigarette Receptacle. Cigarette receptacles shall be located where noted on the Drawings. Secure to pavement as approved by the Engineer.

P. Picnic Shelter. The excavation required to place the picnic shelter into the ground shall be disposed of as directed by the Engineer.

The concrete base shall be constructed as shown on the Drawings or as directed by the Engineer. The placing and fastening of reinforcement shall conform to Subsection 805.05

Picnic shelter shall be constructed straight, plumb, level, and square, in accordance with the drawings and to the satisfaction of the Engineer. Care shall be taken to protect paint finishes and touch up with matching paint and color to the satisfaction of the Engineer. Items that can not be successfully repaired in the field shall be replaced.

907-258.04--Method of Measurement. Miscellaneous Rest Area Facilities, constructed and complete in accordance with the requirements of the contract, and accepted, will be measured by the unit quantity per each unit.

A unit of concrete picnic tables and benches shall consist of one table, two benches, the concrete slab shall be as indicated on the Drawings.

A unit of wooden picnic tables shall consist of one table with benches, and the devices to secure the table when required.

A unit of charcoal grill shall consist of the grill complete with steel post and concrete footing.

A unit of drinking fountain shall consist of all concrete, steel, masonry elements, piping, plumbing elements, and drains as shown on the Drawings.

A unit of trash receptacle shall consist of the receptacle, complete, with leveling devices and approved devices to secure the trash receptacle to the pavement.

A unit of water hydrant shall consist of the hydrant complete with connection to water supply, piping, cut off valve, drain and drain line (where shown), and concrete footing, located where shown on the plans and installed in accordance with manufacturer's directions.

A unit of travel trailer sewage dump station shall consist of one tower, one drain, signs and

concrete as shown in the plan details.

A unit of cast stone bench shall consist of one bench seat and three bench supports.

A unit of sign (masonry and stone) shall consist of all concrete, steel, masonry elements, letters, as symbols shown on the plans.

A unit of bollard shall consist of steel pipe with finial, and concrete for footing and infill, as shown on the plans.

A unit of metal benches shall consist of one bench, and the devices to secure the bench when required.

A unit of pavilion and survey monument shall consist of concrete (not including sidewalk), steel (painted), metal roof, masonry elements, granite, re-location of survey monument, and display panel as applicable and as shown on the Drawings.

A unit of cigarette receptacle shall consist of one receptacle, and the devices to secure the receptacle when required.

A unit of picnic shelter shall consist of concrete (not including sidewalk), steel framing, metal roof, steel columns, and overhead ornaments, as shown on the Drawings.

Separate measurement for excavation and other individual items will not be made, it being understood that the cost thereof is included in one contract price bid per complete items.

907-258.05--Basis of Payment. Charcoal grills, drinking fountains, concrete picnic tables and benches, wooden picnic tables and benches, trash receptacles, water hydrants, travel trailer sewage dump station, cast stone benches, sign (masonry and stone), metal benches, bollards, pavilion, survey monument, car stops, cigarette receptacles, and picnic shelters each unit shall be paid for at the contract unit price bid per each, which price shall be full compensation for furnishing all materials and supplies; for performing all work necessary for each completed unit; and for all equipment, tools, labor and incidentals necessary to complete the work.

Payment will be made under:

907-258-A:	Charcoal Grill	- per each
907-258-B:	Drinking Fountain	- per each
907-258-C:	Concrete Picnic Table and Benches	- per each
907-258-D:	Wooden Picnic Table and Benches	- per each
907-258-E:	Trash Receptacle	- per each
907-258-F:	Water Hydrant	- per each

907-258-G:	Travel Trailer Sewage Dump Station	- per each
907-258-H:	Cast Stone Bench	- per each
907-258-I:	Sign, Masonry and Stone	- per each
907-258-J:	Metal Bench	- per each
907-258-K:	Bollard	- per each
907-258-L:	Pavilion	- per each
907-258-M:	Survey Monument	- per each
907-258-N:	Car Stop	- per each
907-258-O:	Cigarette Receptacle	- per each
907-258-P:	Picnic Shelter	- per each

MISSISSIPPI DEPARTMENT OF TRANSPORTATION

SPECIAL PROVISION NO. 907-262-2 **CODE: (SP)**

DATE: **08/14/2009**

SUBJECT: **Santitary Sewer System**

Section 907-262, Santitary Sewer System, is hereby added to and made a part of the 2004 Edition of the Mississippi Standard Specifications for Road and Bridge Construction as follows:

SECTION 907-262--SANITARY SEWER SYSTEM

907-262.01--Description. This work shall consist of the installation of a sanitary sewer force main consisting of 6-inch PVC Pipe, C900, Class 100 in accordance with these Specifications and conforming to the Plans.

This Work shall consist of installation of gravity sanitary sewers consisting of 8" PVC Pipe, SDR 35 in accordance with these Specifications and conforming to the Plans.

It is the intention of these Specifications to provide the necessary items and instruction for a complete installation including all code compliance. Omission of items or instruction necessary or considered standard good practice for the proper installation and construction of these items shall not relieve the Contractor of furnishing and installing such items and conforming to the codes having jurisdiction.

907-262.02--Materials. Materials shall meet the following applicable sections.

1.1 REFERENCES

A. Referenced publications found within this specification shall be the latest revision unless otherwise specified; and applicable parts of the referenced publications shall be come a part of this specification as if fully included.

1. ASTM American Society for Testing and Materials:
   a. ASTM C 920 Specification for Elastomeric Joint Sealants.
   b. ASTM D 3960 Practice for Determining Volatile Organic Compound Content (VOC) of Paints and Related Coatings
   c. ASTM D 4259 Practice for Abrading Concrete.
   d. ASTM E 337 Standard Practice Test Method for Measuring Humidity with a Psych meter.
   e. ASTM F 710 Practice for Preparing Concrete Floors and Other Monolithic Surfaces to Receive Resilient Flooring
2. FEDERAL STANDARD COLORS:
   a. F 595 B Federal Standard Colors

b. Guideline No. 03732 Selecting and Specifying Concrete Surface Preparation for Sealers, Coatings, and Polymer Overlays

3. ICRI International Concrete Restoration Institute:
4. Guideline No. 03732 Selecting and Specifying Concrete Surface Preparation for Sealers, Coatings, and Polymer Overlays
5. NACE (National Association of Corrosion Engineers)
   a. NACE Publication 6D 173 "A Manual for Painter Safety"
   b. NACE Publication 6G-164 "Surface Preparation Abrasives for Industrial Maintenance Painting"
   c. NACE Publication 6G-164 "Surface Preparation Abrasives for Industrial Maintenance Painting"
   d. NACE Publication TPC2 Coatings and Linings for Immersion Service: Chapter 1 Safety, Chapter Surface Preparation, Chapter 3 Curing, and Chapter 4 Inspection
   e. NACE Publication 617-163 "Surface Preparation of Steel or Concrete Tank Interiors."
   f. NACE RP0892-92 Standard Recommended Practice, Lining over Concrete in Immersion Service.
   g. NACE RP0288-88 Standard Recommended Practice, Inspection of Linings on Steel and Concrete.
6. SSPC Steel Structures Painting Council
   a. SSPC-SP12 Surface Preparation and Cleaning of Steel and Other Hard Materials by High and Ultrahigh Pressure Water Jetting Prior to Recoating.
   b. SSPC-SP13 Surface Preparation of Concrete
   c. SSPC-PA-3 "A Guide to Safety in Paint Application"
   d. SSPC-Guide 12 Guide for Illumination of Industrial Painting Project.
7. OSHA (Occupational Safety & Health Administration:
   a. 1915.35 Standards - 29 CFR - Painting.
8. ANSI American National Standards Institute:
   a. ANSI/ASC 29.4 Exhaust Systems Abrasive Blasting Operations - Ventilation and Safe Practice

1.2 SUBMITTALS

A. Submit the following prior to commencing with any phase of the work covered by this Section:

1. Manufacturer's current printed recommendations and product data sheets for all coating system products supplied under this section including performance criteria, surface preparation and applications, volatile organic compound (V.O.C.) data, and safety requirements.
2. Material Safety Data Sheets (MSDS) for any materials brought on-site including all resurfacing system materials, solvents, and abrasive blast media.

3. Storage requirements including temperature, humidity, and ventilation for resurfacing system materials.
4. Manufacturer's requirements, including application procedures for resurfacing materials shall be in writing and shall be followed in detail. All safety precautions recommended by the Manufacturer shall be strictly adhered to at all times when work is in progress.
5. Color samples for all surfaces to be resurfaced that have been field matched to existing colors.
6. Submit applicators' certification that resurfacing materials comply with Federal, State, and Local regulations for VOC (Volatile Organic Compounds).
7. Submit daily reports that contain the following information: Substrate conditions, ambient conditions, application procedures, work completed and location thereof. Mark-up drawings that show location of work.
8. Submit letter(s) with associated product data signed by Manufacturer certifying that submitted products are suitable for application on the surfaces to be resurfaced and for the service conditions.

B. Submit the following information at the completion of the work identified within the scope of this section:
   1. Submit daily reports that contain the following information: surface preparation, substrate conditions, ambient conditions, application procedures, coating materials used, coating material quantities, batch numbers of materials used, and work completed and location thereof. Mark-up drawings that show location of work.

1.3 DELIVERY, STORAGE, AND HANDLING

A. Materials shall be stored in accordance with Manufacturer's recommendations in enclosed structures and shall be protected from weather and adverse temperature conditions. Flammable materials shall be stored in accordance with state and local codes. Materials exceeding storage life recommended by the manufacturer shall be removed from the site.

B. Store all materials only in area or areas designated by the Engineer solely for this purpose. Confine mixing, thinning, clean-up and associated operations, and storage of materials-related debris before authorized disposal, to these areas. All materials are to be stored on pallets or similar storage/handling skids off the ground in sheltered areas in which the temperature is maintained between 50°F and 90°F.

C. Mix all resurfacing materials in an enclosed mixing area designated by the Engineer. This enclosed area must protect the mixing operation and materials from direct sunlight, inclement weather, freezing, or other means of damage or contamination. Protect all other concrete and metallic surfaces and finishes from any spillage of material(s) within the mixing area.

D. Do not use floor drains, dikes or storm drains for disposal of resurfacing system materials.

E. The Contractor shall take all precautions and implement all measures necessary to avert potential hazards associated with the resurfacing system materials as described on the pertinent Material Safety Data Sheets or container labels.

F. Deliver all materials to the job site in their original, unopened containers. Each container shall bear the Manufacturer's name and label.
   1. Labels on all material containers must show the following information:
      a. Name or title of product.
      b. Federal Specification Number if applicable. c. Manufacturer's batch number and date of manufacture. d. Manufacturer's name.
      c. Generic type of material.
      d. Application and mixing instructions.
      e. Hazardous material identification label. h. Shelf life date.
      f. Storage requirements.
   2. All containers shall be clearly marked indicating any personnel safety hazards associated with the use of or exposure to the materials.
   3. All materials shall be handled and stored to prevent damage or loss of label.
   4. Resurfacing material storage and mixing areas shall be designated by the Engineer.
   5. Do not use or retain contaminated, outdated, prematurely opened, diluted materials, or materials which have exceeded their shelf life.

1.4 SAFETY

A. The Contractor's work forces should comply with the provisions outlined in the following documents:
   1. SSPC-PA-3"A Guide to Safety in Paint Application"
   2. NACE Pub. "A Manual for Painter Safety"
B. The Contractor shall provide personnel with all safety equipment necessary to protect them during any phase of the work. This shall include, but not be limited to safety glasses, goggles, earplugs, hard hats, steel toed work shoes, appropriate personal protective clothing, gloves, and plant approved escape respirators (where required).
C. No work shall be performed until the appropriate Work Requests and lock-outs are approved by the Engineer. The Work Request system provides a mechanism to advise plant staff of a contractor's work activities. The Lockout system is a safety procedure to prevent unintended equipment activation.
D. Keep any flammable materials such as cleaning solvents, thinners, or resurfacing materials away from open flames, sparks or temperatures higher than 150°F. Drums containing flammable materials will be grounded. No solvent in any quantity shall be allowed inside containment enclosures or permitted confined spaces at any time during resurfacing work.
E. Power tools are to be in good working order to avoid open sparking. No spark producing tools shall be utilized in restricted areas as indicated herein.
F. The Contractor shall fireproof all work areas by maintaining a clean work area and having Underwriter's Laboratories approved fire extinguishers on-hand. The Contractor shall furnish these fire extinguishers.
G. Workers doing abrasive blasting operations shall wear a fresh air supplied protective helmet and hood and personal protective clothing acceptable to industry standards and all government regulations.

H. Dispose of rags used for wiping up resurfacing materials, solvents, and thinners by drenching them with water and placing in a metal container with a tight fitting metal cover. Complete this disposal process at the end of each day. Final disposal of these materials is the Contractor's responsibility.

I. Matches, smoking, flames, or sparks resulting from any source including welding, must be remote from the work area during coating work. Smoking is permitted only in designated areas of the plant.

1.5 JOB CONDITIONS

A. Environmental:
   1. Air and Surface Temperatures: Prepare surfaces and apply and cure coatings within air and surface temperature range in accordance with Manufacturer's instructions.
   2. Surface Temperature: Minimum of 5 degrees F (3 degrees C) above the dew point.
   3. Relative Humidity: Prepare surfaces and apply and cure coatings within relative humidity range in accordance with Manufacturer's instructions.
   4. Precipitation: Do not prepare surfaces or apply coatings in rain, snow, fog, or mist.
   5. Wind: Do not spray coatings if wind velocity causes overspray of the coating materials.

1.6 MANUFACTURERS

A. Materials specified are those that have been evaluated for the specific service. Products of the Tnemec Company, Inc. or APPROVED EQUAL are listed to establish a standard of quality. Equivalent materials of other manufacturer's may be submitted on written approval of the Engineer. As part of the proof of equality, the Engineer will require at the cost of the Contractor, certified test reports from a nationally known, reputable and independent testing laboratory conducting comparative tests as directed by the Engineer between the product specified and the requested substitution.

B. Requests for substitution shall include manufacturer's literature for each product giving name, product number, and generic type, descriptive information, solids by volume, recommended dry film thickness and certified lab test reports showing results to equal the performance criteria of the products specified herein. In addition, a list of five projects shall be submitted in which each product has been used and rendered satisfactory service.

C. All requests for product substitution shall be made at least 10 days prior to the bid date.

D. Any material savings shall be passed to the owner in the form of a contract dollar reduction.

1.7 MATERIALS

A. Epoxy Lining System:

1. Materials specified herein are the only approved standard coating systems unless an "or equal" is approved in writing by the Engineer prior to the bid date.
2. The following list specifies the material requirements for resurfacing systems. The approved products are as follows:
   a. Shotcrete: Master Builders EMACO S88 Cl, Sikacem 103 or equal:
      1) Shall be a Portland Type I or Type II cement based material with no polymer additives and with the following minimum performance properties:
         a) Compressive Strength ASTM C-109 Minimum 7000 psi at 7 days
         b) Freeze Thaw ASTM C 666 After 300 cycles, Minimum 95% c.
         c) Splitting Tensile Strength ASTM C-496 Minimum 500 psi at 7 days
         d) Flexural Strength ASTM C 348 Minimum 1000 psi after 7 days
         e) Direct Bond Strength ACI 503.R Minimum 290 psi after 28 days
      2) Calcium-Aluminate based materials will not be approved for use on this project.
   b. Lining: Tnemec Perma-Shield Series 434, or equal
      1) Minimum Performance Requirements:
         a) Autoclave:

            Lining materials must be tested in a controlled autoclave containing 536 ppm H2S, 10% H_2SO4, 4,000 ppm NaCl @ 150°F for 28 days.

            The autoclave testing must be performed by an independent laboratory.

            The lining materials must exhibit the following when tested using Electrical Impedance Spectroscopy (EIS):

            1) Initial EIS impedance of 10 Log Z (Z in ohms cm ^{2} @ 0.1 Hz)
            2) Final EIS impedance greater than 9 Log Z after 28 days exposure
            3) No blistering cracking, checking, or loss of adhesion after 28 days exposure to the H_2S autoclave.
         b) Impact (ASTM D 2794): Requirement - No visible cracking or delamination after 56 inch-pounds direct impact
         c) Chemical Resistance (ASTM C 868): Requirement - No blistering, cracking, erosion, softening, swelling, loss of adhesion or gloss after 98 day continuous immersion at 10017 and 25% Sulfuric Acid

B. Abrasive Blast Media: If dry or wet abrasive blast cleaning is the selected method of surface preparation, provide slag grit of a sieve size, gradation, and quality necessary to produce the degree of cleanliness and surface profile required herein.

1.8 MANHOLES

Manholes shall be as required in the special provision for manholes.

1.9 PIPE AND PIPE FITTINGS

Pipe, pipe fittings, and testing for pipe shall be as required in the special provision for manholes

907-262.03--Construction Requirements. Installation shall meet the following applicable sections.

2.0 GENERAL

A. Hoisting, Scaffolding, Staging, and Planking:
   1. Provide, set-up, and maintain all required hoists, scaffolds, and staging and planking, and perform all access related hoisting work required to complete the work of this section as indicated and specified.
   2. 2Scaffolds shall have solid backs and floors to prevent dropping materials from there to the floors or ground below.

B. Environmental Requirements:
   1. Comply with the Manufacturer's recommendations as to environmental conditions under which materials can be applied.
   2. Do not apply materials when dust is in work site.
   3. The Contractor shall provide all temporary lighting during the work.

C. Protection:
   1. Cover or otherwise protect finish work or other surfaces not being resurfaced.
   2. Erect and maintain protective tarps, enclosures and/or maskings to contain debris (such as dust or airborne particles resulting from surface preparation) generated during any and all work activities. This includes, but is not limited to, the use of dust/debris collection apparatus as required.

D. Initial Inspection of Surfaces to be Coated:
   1. It is the responsibility of the Contractor to inspect and report unacceptable concrete substrate surface conditions to the Engineer prior to the commencement of surface preparation activities.
   2. Unacceptable concrete surface conditions are defined as the presence of water infiltration/inflow, cracked surfaces or concrete deteriorated to a depth of greater than 1" or otherwise unable to withstand surface preparation as specified herein.
   3. Verify that the pH of the cleaned concrete surfaces to be coated is within the range of to 9 to 11. Application of coating materials outside this range will not be permitted without written approval from the Engineer.
   4. Unacceptable steel or ductile/cast iron surface conditions are defined as severely corroded and/or perforated metals and are unable to withstand surface preparation as specified herein.

E. Thinners and Solvents: The Contractor shall use only solvents and thinners as recommended by the Manufacturer.

2.1 SURFACE PREPARATION REQUIREMENTS

A. General:

1. All specified surface preparation shall be performed in accordance with the latest version of the SSPC, NACE, ICRI and other standards referenced in this section.
2. Allow new concrete to cure a minimum of 28 days. Verify dryness by testing for moisture with a "plastic film tape down test." (Reference ASTM D 4263). If necessary for testing horizontal surfaces, Calcium Chloride test in accordance with ASTM F 1869. If test results indicate moisture levels outside the acceptable range of the manufacturer, contact the manufacturer. Do not proceed with the coating application.
3. Prior to applying shotcrete, all existing areas that are scheduled to receive the chemical resistant lining shall be steam cleaned with minimum 210°F water with alkaline -based detergent to remove all loose materials, acid constituents, grease, oil, and other contaminants. Oil and grease shall be removed before mechanical cleaning is started.
4. Mechanically abrade all surfaces to be coated to remove laitance, curing compounds sealer and other contaminants and to produce a minimum surface profile equal to ICRI CSP 5. Reference SSPC-SP13. This preparation will be followed by vacuum cleaning to remove all dust, dirt or friable substances leaving clean, dust free surfaces for resurfacing.
5. Prior to applying shotcrete, identify and stop all active cracks from leaking using either a hydraulic cement or a chemical grout such as DeNeef Flex LV or equivalent from Avanti. The set time of the Hydraulic Cement shall be approximately 1 minute to 90 seconds per ASTM C 403. The compressive strength of the hydraulic cement shall be approximately 1000 psi after 1 hours per ASTM C 109. All products are to be applied in accordance with manufacturer's instructions.
6. For all areas one foot below the low water line and above (except new concrete surfaces), apply shotcrete to bring surfaces out to '/2" beyond original grade. The application shall result in a finish that covers all exposed aggregate and results in no surface voids, discontinuities or irregularities. Cure in accordance with manufacturer's instructions and in accordance with ACI 308.1-98.
7. For all areas one foot below the low water line and new concrete surfaces, apply a full skim coat of Tnemec Series 218 or APPROVED EQUAL to fill all voids and bugholes.
8. All shotcreted surfaces shall be abrasive blasted to remove all laitance from release agents, curing compounds sealers and other contaminants and to produce a minimum surface profile of ICRI CSP 5. This preparation will be followed by vacuum cleaning to remove all dust, dirt or friable substances leaving clean, dust free surfaces for resurfacing. The air used for blast cleaning shall be free of oil and moisture to not cause contamination of the surfaces to be resurfaced.
9. The air used for blast cleaning shall be free of oil and moisture to not cause contamination of the surfaces to be resurfaced.
10. Cleaning and resurfacing shall be scheduled so that dust and other contaminants from the cleaning process will not fall on wet, newly resurfaced areas.

B. Initial Cleaning/Decontamination:

1. All existing areas to be resurfaced shall be pressure washed with alkaline -based detergent to remove all loose materials, acid constituents, grease, oil, and other contaminants.
2. Verify that the pH of the cleaned concrete surfaces to be coated is within the range of 9 to 11. Application of coating materials outside this range will not be permitted without written approval from the Engineer.

C. Abrasive Blast Cleaning:

1. Used or spent blast abrasive shall not be reused on work covered by this section.
2. The compressed air used for blast cleaning will be filtered free of condensed water or oil. Moisture traps will be cleaned at least once every four hours or more frequently as is appropriate.
3. Oil separators shall be installed just downstream of compressor discharge valves and at the discharge of the blast pot discharges. Oil separators shall be cleaned at least once every four hours or more frequently as is appropriate.
4. A paper blotter test shall be performed by the Contractor when requester by the Engineer or the Engineer's representative to determine if the air i,, sufficiently free of oil and moisture.
5. Regulators, gauges, filters, and separators will be in good working order for all of the compressor air lines to blasting nozzles at all times during this work.
6. An air dryer or drying unit shall be installed which dries the compressed air prior to blast connections. This dryer shall be used and maintained for the duration of surface preparation work.
7. The quality, volume, and velocity of life support and ventilation air used during surface preparation shall be in accordance with applicable safety standards and as required to ensure adequate visibility and proper dissipation of volatiles without impacting the prepared surface or the health of the public or personnel working for the Contractor, Subcontractors, Engineer, Engineer's Representatives, or anyone who may be affected by on-site maintenance coating work activities.
8. The abrasive blast nozzles used shall be the venturi or other high velocity type supplied with a minimum of 100 psig air pressure and the necessary volume to obtain the required blast cleaning production rates and specified degree of cleanliness.
9. The Contractor must provide adequate ventilation for airborne particulate evacuation and lighting (meeting all pertinent safety standards) to optimize visibility for both blast cleaning and observation of the substrate during surface preparation work.
10. All phases of surface preparation work specified herein must be inspected by the Engineer before the Contractor proceeds with the subsequent phase of surface preparation.
11. If between final surface preparation work and coating application, contamination of the prepared and cleaned substrate occurs, or if the prepared steel's appearance darkens or changes color, reblasting will be required until the specified degree of cleanliness is established.

2.2 APPLICATION REQUIREMENTS

A. General:

1. Areas not to be resurfaced shall be masked using duct tape or other protection materials to prevent these surfaces from being resurfaced.
2. Ensure straight even termination of resurfacing/topcoat materials on wall edges and flush with embedded steel.
3. The Contractor must follow the minimum and maximum recoat limitation times and related temperature range restrictions between successive lifts for all products specified herein per Manufacturer's stated requirements.
4. All equipment and procedures used for resurfacing system application shall be as recommended by the Manufacturer.
5. Unless specified elsewhere herein, the Contractor shall comply with the Manufacturer's most recent written instructions with respect to the following:
   a. Mixing of All Materials.
   b. Protection and Handling of All Materials.
   c. Recoat Limitation and Cure Times.
   d. Minimum Ambient and Substrate Temperatures, Substrate's Degree of Dryness, Relative Humidity, and Dew Point of Air.
   e. Application.
   f. Final Curing.
   g. Use of Proper Application Equipment.
6. Curing of Resurfacing System: The applied resurfacing system shall be protected from damage during curing and shall be cured as recommended by the Manufacturer. Ambient conditions shall be controlled by the Contractor during curing to ensure the minimum air temperature and minimum relative humidity as required by the Manufacturer is maintained.

B. Chemical Resistant Lining:
1. General Note: The Contractor is advised that with all thick-film, quick curing materials applied to concrete surfaces, outgassing of the concrete can occur. Possible remedies include applying materials when the temperature of the concrete surfaces are descending, or applying a thin (1/8") layer of the specified surfacing material. Other remedies may exist, and may be submitted for the Engineer's approval.
2. Apply shotcrete and Tnemec Series 218 or Approved Equal After shotcreting, prepare surfaces as described in Subsection 3.2.
3. Apply Tnemec Series 434 Permashield chemical resistant mortar to all floor areas and walls scheduled to be coated at a nominal thickness of 125 mils. Application shall be either by trowel or spray. If spray-applied, material shall be finish-troweled to a hard, dense film.

C. Safety And Ventilation Requirements:
1. Requirements for safety and ventilation shall be in accordance with SSPC Paint Application Guide No. 3.

3.3 FIELD QUALITY CONTROL INSPECTION AND TESTING

A. Inspection by the Engineer or others does not limit the Contractor's responsibilities for quality control inspection and testing as specified herein or as required by the Manufacturer's instructions.

B. Perform the quality control procedures listed below in conjunction with the requirements of this Section.
   1. Inspect all materials upon receipt to ensure that all are supplied by the Manufacturer.
   2. Provide specified storage conditions for the resurfacing system materials, solvents, and abrasives.
   3. Inspect and record findings for the degree of cleanliness of substrates using. The pH of the concrete substrate will be measured using pH indicating papers. pH testing is to be performed once every 50 sq. ft. Acceptable pH values shall be between 9.0 and 11.0 as measured by a full-range (1-12) color indicating pH paper with readable color calibrations and a scale at whole numbers (minimum). Use Hydrion Insta-Check Jumbo 0-13 or 1-12 or equal. The paper shall be touched to the surface once using moderate gloved finger pressure. The surface shall not be wiped or moved laterally to disturb the surface during pH testing. Following the one touch, lift the paper vertically to not "wipe" the surface. Compare the color indicated with the scale provided and record the pH.
   4. Inspect and record substrate profile (anchor pattern). Surfaces shall be abraded, as a minimum, equal to the roughness of 40 grit sand paper.
   5. Measure and record ambient air temperature once every two hours of each shift using a thermometer and measure and record substrate temperature once every two hours using a surface thermometer.
   6. Measure and record relative humidity every two hours of each shift using a sling psychrometer in accordance with ASTM E337.
   7. Provide correct mixing of resurfacing materials in accordance with the Manufacturer's instructions.
   8. Inspect and record that the "pot life" of resurfacing materials are not exceeded during installation.
   9. Verify curing of the resurfacing materials in accordance with the Manufacturer's instructions.
   10. Upon full cure, the installed lining system shall be checked by high voltage spark detection in accordance with NACE RP0188-90 to verify a pinholefree surface. Voltage shall be set at 11,000 volts. Areas which do not pass the spark detection test shall be corrected at no cost to the Owner and rechecked. High voltage spark detection shall be conducted on the chemical resistant mortar before the installation of the gel coat.
   11. Upon completion of the lining system installation the lined area shall be cleaned and prepared to permit close visual inspection by the Engineer or the Engineer's Representative. Any and all deficiencies or defective work (not in compliance with this section or related sections) will be marked for repair or removal/replacement by the Contractor at no additional cost to the Owner.

2.4 ACCEPTANCE CRITERIA

A. Acceptance Criteria for Surface Preparation Work: All surfaces shall be prepared in accordance with the specification and referenced standards therein.

B. Acceptance Criteria for Coating System Application Work
   1. Acceptable coating work will be based upon the following:

a. No pock-marks, trowel marks, depressions, unconsolidated areas waviness or ridges, pinholes or holidays in either size or frequency.
b. No intercoat bond failures between lifts.
c. Proper curing of coatings.

2. Resurfaced areas shall pitch to drains.
3. There shall be no areas that puddle when flood tested.
4. The Engineer or Engineer's Representative shall, at their discretion, inspect the following:
   a. Profile and degree of cleanliness of substrate.
   b. Thickness of materials/coverage rate confirmation.
   c. Ambient temperature and humidity requirements and substrate temperature.
   d. Curing and recoat times.
   e. Proper curing of the resurfacing materials.
5. Rework required on any holidays or any other inadequacies found by the Engineer or the Engineer's representative in the quality of the coating work shall be marked. Such areas shall be recleaned and reworked by the Contractor according to these specifications and the manufacturer's recommendations at no additional cost to the Owner.
6. The Contractor is responsible for keeping the Engineer informed of all progress so that inspection for quality can be achieved.
7. The Contractor is ultimately responsible for the quality performance of the applied materials and workmanship. Inspections by the Engineer or the Engineer's Representative do not limit this responsibility.

2.5 FINAL INSPECTION

A. Perform a final inspection to determine whether the resurfacing system work meets the requirements of the specifications. The Engineer and the Engineer's Representative will conduct final inspection with the Contractor.

2.6 CLEANUP

A. Upon completion of work, the Contractor shall remove surplus materials, equipment, protective coverings, and accumulated rubbish, and thoroughly clean all surfaces and repair any work-related damage. The surrounding surface areas including roadways and all other surfaces shall be restored to their pre-project condition.

3.0 MANHOLES

Manholes shall be as installed in accordance with the special provision for manholes.

3.1 PIPE AND PIPE FITTINGS

Pipe, pipe fittings, and testing for pipe shall be as required in the special provision for manholes

907-262.04--Method of Measurement. Installation of pipe of the type specified will be measured by the linear foot.

907-262.05--Basis of Payment. Pipe, measured as prescribed above, will be paid for at the contract bid price per the linear foot, which price shall include the cost of all labor, materials, tools, pipe bedding, connections to manholes, leak testing, and all incidentals necessary to complete the work.

Payment will be made under:

907-262-A: ___" Description Pipe - per lineal foot

MISSISSIPPI DEPARTMENT OF TRANSPORTATION

SPECIAL PROVISION NO. 907-265-5 **CODE: (SP)**

DATE: **02/12/2013**

SUBJECT: **Potable Water System**

Section 907-265, Potable Water System, is hereby added to and made a part of the 2004 Edition of the Mississippi Standard Specifications for Road and Bridge Construction as follows.

SECTION 907-265-- POTABLE WATER SYSTEM

907-265.01--Description. This work shall consist of all labor, materials, equipment, tools and services required to furnish and install water mains, fittings, thrust blocks and related appurtenances at sites and locations as designated in these specifications and in reasonably close conformity with the lines and grades specified in the plans.

907-265.02--Materials.

907-265.02.1--Pipe. Pipe components shall meet the following requirements:

Polyvinyl Chloride (PVC) Pipe shall conform to AWWA C-900, Class 150, SDR-18. Pipe shall be made to cast iron O.D.'s. Each length of pipe shall be stamped with approval of National Sanitation Foundation and Underwriters Laboratories, Inc. for transporting potable water. Pipe couplings or joints shall be an integral part of the pipe barrel, consisting of an expanded bell with a groove to retain a rubber sealing ring conforming to the requirements of AWWA C-111. Gaskets shall be factory bonded into the groove. At least 85 percent of pipe shall be in standard 20 foot lengths. Remaining random lengths shall not be less than 10 feet long.

Ductile Iron Pipe shall conform to ANSI A-21.51 (AWWA C-151) Grade 60-42-10 Ductile Iron, thickness Class 52. Pipe interior shall be cement mortar lined per ANSI A-21.4 (AWWA C-104). Rubber gasket joints shall be per ANSI A-21.11 (AWWA C-111).

907-265.02.2--Fittings: Fittings for pipes four inches (4”) in size or greater may meet any one of the following specifications, at Contractor's option:

a. Cast Iron conforming to ANSI A-21.10 (AWWA C-110), 250 psi rated.
b. Ductile Iron conforming to ANSI A-21.10 (AWWA C-110), 350 psi rated.
c. Compact Ductile Iron Fittings conforming to ANSI A-21.53 (AWWA C-153), 350 psi rated.

All fittings shall be cement mortar lined per ANSI A21.4 (AWWA C-104). All fittings shall be of the mechanical joint type.

907-265.02.3--Gate Valves. Gate valves shall be of the "resilient seat" type, conforming to AWWA C-509, epoxy coated inside to AWWA C550. End connections shall be mechanical joint, except that valves used in fire hydrant stubs shall be flange by Mechanical Joint. Valves shall be rated for zero leakage to 200 psi, and 400 psi hydrostatic test pressure. Valves shall be of the non-rising stem (NRS) design. Gates shall be encapsulated in rubber where exposed to line velocity and shall be field replaceable. Each valve shall have a 2-inch square operating nut and shall open to the left. Retainer glands shall conform with the requirements specified for water main pipe. Gate valves shall be "Mueller," or an approved equivalent.

Valve boxes shall be supplied for all buried valves. Valve boxes shall be made of good quality cast iron and shall be of the sectional type. The lower section shall be a minimum of five inches (5") in diameter, enlarged to fit around the bonnet of the valve if a two section box is used, or to fit a circular or oval base section of a three section box is used. The upper section shall be arranged to slide or screw down over the adjoining lower section and shall be provided with cast iron lids or covers marked "WATER".

907-265.02.4--Nipples. Nipples shall be the same as the pipe, except threaded nipples shall be Schedule 80.

907-265.02.5--Gaskets. Gaskets shall be full faced, 1/8-inch thick, fabricated from ethylene propylene rubber (EPR). When mating flange has raised face, flat ring gasket shall be used and filler gasket provided between outside diameter of raised face and flange outside diameter to protect PVC flange from bolting moment.

907-265.02.6--Joint Restraint. Pipe joint restraint shall be applicable only for pipe joints within specified distances from fittings -- See Schedule in Plans: Two glands shall be used similar in design and materials to the joint retainer glands previously specified, one immediately behind the joint bell and one on the pipe spigot, connected by two or more ductile iron rods spanning across the pipe joint. For ductile pipe, it is also permissible to use mechanical joint pipe with restrained retainer gland, or special "lock-ring" pipe joints.

907-265.02.7--Joint Retainer. Mechanical joint retainer glands shall be used for all connections of pipe to fittings and shall be made with a suitable restrained joint system, meeting any one of the following specifications:

For Ductile or PVC Pipe, the joint shall be a suitable ductile iron retainer gland, designed and recommended by the gland manufacturer, for the type of pipe used. Gland shall be manufactured entirely of 60-42-10 ductile iron conforming to ASTM A536. Glands shall attach to the pipe barrel through a plurality of individually activated gripping surfaces (wedges). It shall be EBAA Iron "Megalug" series or equal.

For PVC Pipe, the joint shall be a heavy ductile iron or fused epoxy coated structural steel (ASTM A36) clamp which employs serrations on its inside surface to firmly grip the outside of the PVC pipe barrel. Clamp shall be specifically designed and recommended for use with the size and thickness class of pipe used. All hardware shall be ductile iron. It shall be Uni-flange Series 1300 or approved equal.

For Ductile Pipe only, the joint shall be a ductile iron mechanical joint retainer gland employing cupped-end threaded set screws which conform with the pipe manufacturer's guidelines as to number of set screws and torque to be applied to properly restrain the joint to a rating of not less than 250 psi

907-265.02.8--Directional Drilling. Directional drilling shall be as addressed in Special Provision 907-603 entitled "Direction Drilling".

907-265.02.9--Casing Pipe. Casing pipe shall be as addressed in Special Provision 907-603 entitled "Pipe Casing".

907-265.02.10--Buried Pipe Line Identification. Detectable underground utility marker tape shall be provided for burial with PVC pipe. It shall be a minimum of five (5) mils thick and three inches (3") in width. Minimum tensile strength shall be 35 pounds and tape shall elongate not less than 80 percent before breaking. Tape shall be permanently imprinted with an appropriate legend to identify the contents of the pipe (e.g. "Water Main Below".)

Detectable underground utility marker wire shall be provided for burial with PVC pipe. It shall be a minimum of 12 gauge wire.

Electronic Ball Markers shall be provided in a standard frequency and color coded (blue) to APWA standards for water systems. The markers shall be readable with proper instrumentation to a bury depth of five feet (5'). The markers shall be a 4- inch diameter sphere, weighing 0.77 pound and having a high-density, watertight polyethylene shell. Electronic ball markers shall be model no. 1423-XR/iD as manufactured by 3M, or an approved equivalent.

907-265.02.11--Automatic Flushing Assemblies. Automatic Flushing Assemblies shall be provided in lockable, corrosion resistant box, shall be provided with freeze protection apparatus and shall be Eclipse model no. 9600 as manufactured by Kupferle Foundry Company, St. Louis, MO, (314) 231-8738, or an approved equivalent. Automatic flushing assemblies shall be provided with a 6-inch PVC drain and P-trap connected to the sewer collection system.

907-265.02.12--Connection to Existing Water Mains. Tapping sleeves shall be fabricated from heavy Type 304 stainless steel, with a full circumferential seal to the run pipe provided by a rubber gasket resistant to water, salt solutions, mild acids, gases, and sewage. Multiple stainless steel bolts shall ensure uniform sealing. Outlet flange shall conform with ANSI 150 pound drilling, recessed for tapping valve per MSS-SP 60. A ¾-inch NPT test plug shall be provided. O.D. range of body shall match the actual measured O.D. of the pipe being tapped.

Tapping valves shall conform to the requirements for Gate Valves and Valve Boxes on Water Mains, except that the inlet shall be Class 125 Flange and the outlet, Mechanical Joint. The valve opening shall be oversized to permit a cutter head to pass which is ½ inch smaller than the nominal branch pipe size. Valves shall be furnished complete with cast iron sectional valve box, as is specified above for Gate Valves. A retainer gland, as is specified above for Joint Retainer, is required for the connection of the new pipe to the tapping valve.

907-265.02.13--Fire Hydrant. All fire hydrants shall comply with AWWA Specifications C-502 and the following design specifications.

Fire hydrants shall be of the compression type closing with the line pressure. The valve opening shall be 5 1/4 inches. The friction loss though the hydrant shall not exceed 2.5 psi at 1,000 GPM flowing through the pumper nozzle.

The bonnet section of all hydrants shall be designed so the bearing surfaces and stem threads are sealed in a cone shaped lubricant reservoir and automatically lubricated each time the hydrant is operated.

The hydrant shoe shall have at least two drain outlets. Size of shoe shall be six inches (6") and of the mechanical joint type. A retainer gland as specified for water main pipe is required.

Hydrants shall be furnished with two 2½-inch hose nozzles and one 4½-inch pumper nozzle. The type and size of threads shall be National Standard. The distance from the ground line to the center line of the pumper nozzle shall be not less than 17 inches, nor more than 26 inches. The operating nut shall be pentagonal, 1½ inches from point to flat, and shall open in the counter-clockwise direction.

Hydrants shall be furnished with a breakable feature designed to break cleanly two inches (2") above the ground line upon contact. This feature shall consist of a two part breakable safety flange with a torque diverting breakable stem coupling. Flangible bolt construction will not be accepted.

The design of the hydrant shall permit easy installation of top extensions and a full 360 rotation of the upper barrel without shutting off the water.

Hydrants shall be M & H 129 or Mueller A-423 model.

Gravel shall be No. 57 crushed stone or washed gravel.

Paint shall conform to requirements of AWWA C-502, and shall be yellow.

Valve shall be installed with each fire hydrant and shall be a 6-inch gate valve located on the hydrant stub as detailed in Plans, complete with cast iron valve box. This valve and box shall conform to the specifications for gate valves and valve boxes on water mains, except that the end connections shall be flange x Mechanical Joint. The cost of these shall be included under this Item.

907-265.03--Construction Requirements.

907-265.03.1--General Excavation. Excavation shall include the clearing of the site of the work, the loosening, loading, removing, transporting and disposing of all materials, wet or dry, above or below ground necessary to be removed to construct all pipes included in this contract to

the lines, grades and locations shown on the Plans. No burying or burning of trees, stumps, roots, or other debris will be allowed.

Where required, the Contractor shall remove with care all shrubbery, plants, flower planters, flower bed borders, set aside, watered, and kept alive and reset as before construction work. The Contractor shall furnish and install replacement plants which die as a result of construction operations.

In areas where water main will be installed in close proximity to trees designated to remain, the major root systems of the trees shall be protected from damage. Where necessary, contractor shall install water main by tunneling underneath the tree roots.

The Contractor shall, at his own expense, furnish and install all temporary sheeting, timbering and bracing required to maintain the excavation in a condition to furnish safe working conditions and to permit the safe and efficient installation of all items of contract work. The Contractor shall further, at his own expense, shore up or otherwise protect all fences, buildings, walls, walks, curbs, or other property adjacent to any excavation which might be disturbed during the progress of the work, except for such facilities which are within the allowable trench limits and are designated for removal and restoration.

Temporary supports must be removed by the Contractor at his own expense after or concurrently with the completion of the permanent facility.

The Contractor shall do all ditching, pumping, well pointing and bailing, build all drains, and do all other work necessary to keep the excavation clear of ground water, sewage or storm water during the progress of the work and until the finished work is safe from injury. Where the excavation is wet sand, and suitable construction conditions cannot be obtained by other methods, the Contractor shall install and operate, at his own expense, a pumping system connected with well points, so as to drain the same effectually. All well point holes shall be backfilled with sand after removal. No masonry or pipe shall be laid in water, and water shall not be allowed to rise over masonry until concrete or masonry has set at least 48 hours. All water pumped or drained from the work shall be disposed of in a manner that will not damage adjacent property or other work under construction. Necessary precautions shall be taken to protect all construction against flooding.

Whenever the excavation is carried beyond the lines and grades shown on the Plans, the Contractor shall, at his own expense, refill all such excavated space with backfill material as specified in the plans or as directed by the Engineer.

Unsuitable and surplus excavated material not incorporated in the work shall be disposed of by the Contractor at his own expense.

In the event that any existing gas pipe, water pipes, conduits, sewers, tile drains or poles are blocked or interfered with by the excavation required on this project, the Contractor shall maintain them in continuous operation, and restore them to the same condition as they were prior

to the start of construction of this project. Gas pipes or electrical power distribution facilities which are disturbed in any way shall be inspected and repaired (if necessary) by the utility owner. (cost absorbed)

Any culvert pipe joint exposed by excavation shall be wrapped with an approved geotextile filter fabric, three feet in width, before backfilling, at no additional compensation.

907-265.03.2--Trench Excavation. The ground shall be excavated in open trenches, of sufficient width and depth to provide ample room within the limits of the excavation, or lines of sheeting and bracing, for the proper construction of the water main.

Mechanical excavation of trenches shall be stopped above the final invert grade elevation so that the pipe may be laid on a firm, undisturbed native earth bed.

The width of the trench at the top of the pipe shall not exceed the outside diameter of the pipe plus two feet (2'). The maximum allowable trench width at the ground surface shall not exceed the outside diameter of the pipe, plus twice the depth of cut. Restoration of disturbed facilities as a pay item will only be allowed within these limits.

The minimum depth of excavation shall be as required for a cover over the completed water main of not less than 30 inches. Where water pipes cross under existing drainage ways, provide not less than 24 inches cover under ditches or 12 inches clearance under storm drain pipes.

907-265.03.3--Bedding. When the native bedding material encountered in the trench bottom consists of a material deemed by the Engineer to be unsuitable for pipe bedding, the Contractor shall over excavate the trench to a depth as specified in the Plans and replace with bedding material. Should over excavation occur where a suitable native soil exists for bedding purposes, the Contractor shall fill the area of over-excavation with an acceptable bedding material, but at Contractor's expense.

Trenches shall be dry when the trench bottom is prepared. A continuous trough shall be pared or excavated to receive the bottom quadrant of the pipe barrel. In addition, bell holes shall be excavated so that after placement, only the barrel of the pipe receives bearing pressure from the trench bottom.

Preparation of the trench bottom and placement of the pipe shall be carefully made so that when in final position, the pipe is true to line and grade.

907-265.03.4--Laying Pipe. Pipe shall be protected during handling against impact shocks and free fall. Pipe shall be clean at all times, and no pipe shall be used in the work that does not conform to the appropriate specifications.

Pipe shall be laid accurately, to the line and grades with fittings and valves at the required locations as designated in the Plans. Preparatory to making pipe joints all surfaces of the portions of the pipe to be jointed or of the factory-made jointing material shall be clean and dry. Lubricants, primers, adhesives, etc., shall be used as recommended by the pipe or joint

manufacturer's specifications. The jointing materials or factory fabricated joints shall then be placed, fitted, joined, and adjusted in such a workmanlike manner as to obtain the degree of water-tightness required.

If dirt enters the pipe, it shall be removed and the interior pipe surface swabbed with a 1 percent hypochlorite disinfecting solution.

Trenches shall be kept water-free and as dry as possible during bedding, laying, and jointing and for as long a period as required. As soon as possible after the joint is made, sufficient backfill material shall be placed along each side of the pipe to offset conditions that might tend to move the pipe off line and grade.

If pipe and fittings are not kept dry during installation, Contractor shall ensure that any water entering the pipe contains an available-chlorine concentration of approximately 25 mg/l by adding calcium hypochlorite granules or tablets to each length of pipe.

Wherever necessary to deflect pipe from a straight line, either in the horizontal or vertical plane, the degree of deflection shall not exceed maximum permissible deflections as recommended by pipe manufacturer.

Gate Valves shall be installed as detailed in the Plans and in strict accordance with manufacturer's recommendations. Valve Boxes shall be installed as detailed in the Plans and in strict accordance with manufacturer's recommendations. Installation of thrust blocks will be as detailed in the Plans.

907-265.03.5--Backfilling. All trenches and excavation shall be backfilled as soon as the work has developed sufficient strength to resist backfilling loads and forces and the work shall be prosecuted expeditiously after it has commenced.

No pipe shall be backfilled above the top of the pipe until the pipe elevations, alignment and the pipe joints have been checked, inspected and approved by the Engineer.

All pipes as soon as laid shall have the space between the pipe and the bottom and the sides of the trench backfilled to the spring line of the pipe with a select sandy material. This material shall be thoroughly compacted by hand or mechanical means.

Backfill shall then proceed with the placement of specified select backfill material in 6-inch layers to one foot above the top of the pipe. This backfill shall be compacted by mechanical compactor to not less than 90 percent Standard Proctor Density.

907-265.03.6--Compaction of Pipe Trenches. In areas where pipe trenches are not under or immediately adjacent to existing or proposed structures, roads, driving surfaces, or sidewalks, the material will be compacted to 90% Standard Proctor Density.

In areas where pipe trenches are under or immediately adjacent to existing or proposed structures, roads, driving surfaces, or sidewalks, the material will be compacted to 95% Standard Proctor Density.

The select sandy backfill referred to in paragraphs above shall be a sandy, cohesionless material, no more than 20 percent (by weight) of which shall pass the No. 200 sieve. The materials shall be well-graded to make it easily compactible. The moisture content when placed in the trench shall be reasonably close enough to optimum so as to not adversely affect proper compaction.

Where the native excavated soil does not meet the requirement for select sandy backfill, the Engineer may authorize the replacement for such unsuitable material with contractor-furnished select sandy backfill. All surplus or unsuitable material not used in backfilling shall be disposed of off-site by Contractor.

All PVC pipe installations require that electronic marker balls, metalized marker tape and approved tracer wire be buried in the backfill approximately 12 inches above the pipe. The detectible tracer wire and the metalized tape shall be attached to fittings, valves, hydrants, etc. to provide a location above ground to transmit the signal to the wire or tape without having to dig down to the pipe.

907-265.03.7--Fire Hydrant. Hydrants shall be installed as shown in the detailed Plans and in a manner that will provide complete accessibility and will prevent damage from vehicles. All hydrants shall be vertical and shall have their pumper connections at right angles to the curb line. Thrust block backings shall be constructed in strict accordance with manufacturer's recommendations.

Hydrants shall be tested in conjunction with entire system.

No. 57 crushed stone or washed gravel shall be placed at the base of the hydrant to provide drainage.

After installation and prior to final acceptance the fire hydrants shall be painted above the ground line in accordance with AWWA Standard C-502. Multiple coats may be required to achieve uniform appearance if the hydrants are supplied by the manufacturer in a different color than desired.

It is anticipated that some hydrants designed for bury depths greater than the standard 36 inches will be required, due to existing utility lines and/or roadside ditches. For this reason, provisions are made in the contract for different depths of fire hydrants. However, the Contractor is cautioned that the exact number of hydrants of each depth may vary from the contract quantity. To avoid possible complications due to the slow delivery of hydrants, the Contractor may choose to utilize manufactured hydrant barrel extensions for some or all of the long-barrel hydrants.

907-265.03.8--General Requirements. All connections between pipe and fittings shall be made with an approved restrained joint system. In addition, all pipe joints within a distance which is tabulated in the Plans from a fitting must also employ an approved restrained joint system. The

assembly and installation of each restrained joint system shall be in strict accordance with the manufacturer's printed instructions and in the presence of a representative of the Engineer.

Concrete thrust blocks shall also be installed in addition to any type of joint restraint system. Concrete thrust blocks are to be installed according to the plan dimensions and details, placed between the fittings and undisturbed earth. Thrust blocks are also required at all bends of 11½ degrees or more, unless specifically waived by the Engineer because of unusual conditions at a specific fitting.

For all pipe sizes and types, install only full lengths of pipe adjacent to fittings, except in unusual circumstances.

Contractor must use care to prevent the entry of ground water or other contaminants into the water pipe, fittings, valves and appurtenances, either before, during, or after construction. Pipe delivered for construction shall be stored so as to minimize the entrance of foreign materials. All openings in the pipeline shall be closed with watertight plugs when pipe laying is stopped.

Connections to existing distribution system shall be made in a manner approved by the Engineer and shall be scheduled during times with the least inconvenience to customers and shall be accomplished in a timely manner with a minimum interruption of service. Contractor will be required to provide a minimum of 48 hours advance notification to customers where service will be interrupted. Contractor shall also provide advance notification to the Owner's water department and fire department.

Where the project requires connection, removal, or any type of contact with existing asbestos cement pipe, Contractor shall comply with all local, state and federal requirements for cutting, handling and disposal of asbestos cement pipe.

Contractor must coordinate the use of domestic water with the Owner. The Owner will allow Contractor to utilize water from the distribution system for the filling of the new water mains and a reasonable amount of water for initial flushing, without compensation. If in the opinion of the Engineer and Owner, the Contractor did not take proper precautions in preventing debris and contaminants from entering the new system during construction or does not follow proper disinfection procedures as described in the latest revision of AWWA C651, the Owner reserves the right to assess charges to the Contractor for any excessive use of domestic water.

The new water mains shall be kept isolated from the active distribution system by physical separation until satisfactory bacteriological testing has been completed and the disinfected water flushed out. Water required to fill the new water mains for hydrostatic pressure testing, disinfection and flushing shall be supplied through a temporary connection between the distribution system and the water main and shall include an appropriate cross-connection control device.

Contractor shall be responsible for the proper handling and disposal of water discharged during flushing operations. All water discharged from the water system shall be disposed of in a manner that will not damage adjacent property, other work under construction, or adversely

affect traffic or the general public. No water shall be discharged to the sanitary sewer collection system. Contractor shall advise and coordinate flushing of water mains with the Owner's water department and fire department and shall be performed in a manner that will not result in less than acceptable water pressure in the existing system. In case of fire or emergency, Contractor shall temporarily cease flushing operations.

907-265.03.9--Hydrostatic Testing. Pressure and leakage tests shall be completed in conformance with AWWA C-600, Section 4, latest revision, and in the presence of the Engineer or his representative.

Pressure Test: After the pipe has been laid, all newly laid pipe or any valved section thereof, including hydrants, shall be subjected to a hydrostatic pressure of at least 1½ times the working pressure at the point of testing.

Test pressures shall:

1. Not be less than 1.25 times the working pressure at the highest point along the test section;
2. Not exceed pipe or thrust-restraint design pressures;
3. Be of at least 2-hour duration;
4. Not vary by more than ±5 psi (0.35 Bar) for the duration of the test;
5. Not exceed twice the rated pressure of the valves or hydrants when the pressure boundary of the test section includes closed gate valves or hydrants; and
   NOTE: Valves shall not be operated in either direction at Differential pressure exceeding the rated pressure.
6. Not exceed the rated pressure of the valves when the pressure boundary of the test section includes closed resilient seated gate valves or butterfly valves.

Pressurization. Each valved section of pipe shall be filled with water slowly and the specified test pressure, based on the elevation of the lowest point of the line or section under test and corrected to the elevation of the test gauge, shall be applied by means of a pump connected to the pipe in a manner satisfactory to Owner. Valves shall not be operated in either the opening or closing direction at differential pressures above the rated pressure. It is good practice to allow the system to stabilize at the test pressure before conducting the leakage test.

Air Removal. Before applying the specified test pressure, air shall be expelled completely from the pipe, valves and hydrants. If permanent air vents are not located at all high points, Contractor shall install corporation cocks at such points so that the air can be expelled as the line is filled with water. After all the air has been evacuated, the corporation cocks shall be closed and the test pressure applied. At the conclusion of the pressure test, the corporation cocks shall be removed and plugged or left in place at the discretion of the Engineer.

Examination. Any exposed pipe, fittings, valves, hydrants and joints shall be examined carefully during the test. Any damaged or defective pipe, fittings, valves or hydrants that are discovered following the pressure test, shall be repaired or replaced with sound material, and the test shall be repeated until it is satisfactory to Engineer.

Leakage Test: The leakage test shall be conducted concurrently with the pressure test.

Leakage Defined. Leakage shall be defined as the quantity of water that must be supplied into the newly laid pipe, or any valved section thereof, to maintain pressure within 5 psi (0.35 Bar) of the specified test pressure after the air in the pipeline has been expelled and the pipe has been filled with water. Leakage shall not be measured by a drop in pressure in a test section over a period of time.

Allowable Leakage. No pipe installation will be accepted if the leakage is greater than that determined by the following formula:

$$L = \frac{SD * P}{133{,}200}$$

in which L is the allowable leakage, in gallons per hour; S is the length of pipe tested, in feet; D is the nominal diameter of the pipe, in inches; and P is the average test pressure during the leakage test, in pounds per square inch gauge. This formula is based on an allowable leakage of 11.65 gpd, per mile, per inch nominal diameter, at a pressure of 150 psi.

When testing against closed metal-seated valves, an additional leakage per closed valve of 0.0078 gal/hr/inch of nominal valve size shall be allowed.

When hydrants are in the test section, the test shall be made against the closed hydrant.

Acceptance of installation: Acceptance shall be determined on the basis of allowable leakage. If any test of laid pipe discloses leakage greater than that specified, Contractor shall, at his own expense, locate and make repairs as necessary until the leakage is within the specified allowance. All visible leaks are to be repaired regardless of the amount of leakage.

Disinfection: After completion of the construction and pressure testing of water distribution lines, they shall be flushed and disinfected using at least a 50 mg/l free chlorine solution for 24 hours or as described in the latest revision of AWWA C651, Standard for Disinfecting Water Mains, and in a manner acceptable to the Mississippi State Department of Health. Disposal of heavily chlorinated water may require the Contractor to obtain a permit from the Department of Environmental Quality/Office of Pollution Control.

After final flushing and before the new water mains are connected to the distribution system, the Contractor shall arrange for water samples to be collected and tested for bacteriological quality by a laboratory certified by the Mississippi State Department of Health. At least one set of samples shall be collected from every 1200 feet of looped lines and from every dead-end line. No hose or fire hydrant shall be used in the collection of samples. The costs for all bacteriological sampling and testing shall be the responsibility of the Contractor.

Water being collected for testing shall not have a chlorine residual higher than is normally maintained in other parts of the distribution system. No chlorine shall be present which is a

result of line disinfection. A sample showing "No Coliform Present" shall constitute a satisfactory sample when analyzed by Mississippi Department of Health Laboratory or a laboratory certified by the Mississippi State Department of Health. This sterilization and sampling procedure shall be repeated until two consecutive acceptable samples (taken at least 24 hours apart) are obtained from each sample point.

If trench water has entered the new mains during construction or, if in the opinion of the Engineer, excessive quantities of dirt or debris have entered the new mains, bacteriological samples shall be taken at intervals of approximately 200 feet. Samples shall be taken of water that has stood in the new mains for at least 16 hours after final flushing has been completed.

If the initial disinfection fails to produce satisfactory bacteriological results, the new mains shall be re-flushed and resampled. If check samples also fail to produce acceptable results, the mains shall be re-chlorinated by the continuous-feed or slug method of chlorination as described in the latest revision of AWWA C651 until satisfactory results are obtained.

The testing and disinfection operations shall be coordinated with local water utility. Chlorine tablets shall not be used. Chlorine granules, gas, or liquid are acceptable.

907-265.03.10--Separation Between Sewer and Water Lines. Water mains shall be laid at least 10 feet horizontally and 18 inches vertically from any existing or proposed sanitary sewer or manhole (including force mains). The distance shall be measured edge to edge. Water lines should always be installed above sewer lines and the bottom of the water line should be at least 18 inches from the top of the sewer line.

Special Conditions: Where local conditions prevent adequate horizontal and vertical separation, the appropriate reviewing agency may allow the water line to be laid closer to the sewer line if supported by adequate data from the design engineer. Each situation will be reviewed on a case by case basis. In this situation, all three of the following conditions must be met:

If the 10 foot horizontal separation between water and sewer lines cannot be maintained then the water line should be ductile iron with water joints located at the maximum distance possible from sewer line joints. PVC pipe may be used if it is protected by a steel casing. Also, the water and sewer lines must be in separate trenches with adequate space for maintenance. In some cases, special sewer line construction procedures may be required.

Where the 10-foot horizontal and 18-inch vertical separation cannot be maintained, condition in previous paragraph must be met and the sewer line shall be constructed according to water main standards.

Where water lines cross over sewer lines, the pipe segments should be centered to provide maximum spacing of joints of both water and sewer lines. A vertical separation of at least 18 inches should be maintained (water over sewer).

907-265.03.11--Connection to Existing Water Mains. The new segments of water mains be constructed and pressure tested prior to connecting them to existing pipes. Temporary plugs and water service-type connections will be required to allow this.

After the new pipe segments are complete and tested, connections will be made to the existing pipes. All abandoned pipes shall be capped.

Installation of tapping sleeves shall fully conform to manufacturer's recommendations. The pipe barrel to be tapped shall be fully and carefully cleaned. Connections to existing asbestos cement pipe shall be smoothed with a wire brush to ensure a tight seal of the gaskets against the pipe.

Before each sleeve is installed, the pipe barrel to be tapped shall be measured and the actual measured pipe O.D. shall be within the range recommended for the sleeve used.

The actual size of the hole cut in the pipe barrel shall be not more than 1/2 inch smaller than the nominal size of the branch connection (e.g., not less than 5½ inches for a 6-inch tap). The drilling machine and shell cutter head used shall be specifically recommended for the type of pipe being tapped.

After the tap is complete and the tapping valve closed, the sleeve shall be bled of air and then visually checked for leakage before backfilling.

Connections made to existing pipe shall be made as specified. Necessary adapter fittings, glands, or special gaskets shall be furnished as needed to properly connect to the type of existing pipe or fitting encountered.

The Owner will assist Contractor by locating existing valves necessary to turn off the water pressure for a short period necessary to make the connection. Contractor shall provide a minimum 24-hour notice to the Owner for any outages. The Contractor may be requested to schedule some connections for a specific time of day or night, to reduce inconvenience to customers.

907-265.03.12--Concrete: Concrete shall be Class B, as addressed in Special Provision 907-804.

907-265.03.13--Reinforcement: Bar Reinforcement shall be Grade 60 billet steel conforming to AASHTO Designation: M31.

907-265.04--Method of Measurement: Pipe of the size and type specified will be measured by the linear foot.

Ductile iron fittings will be measured by the pound.

Gate Valve, Flushing Valve, Automatic Flushing Valve, Connection to Existing Water Line & Fire Hydrant Assembly will be measured per each.

Initial Testing, of the type specified, will be measured per each. Only the initial test will be measured for payment in each specific section (isolation section). Any re-testing will not be measured for payment.

907-262.05--Basis of Payment. Pipe measured as prescribed above, will be paid for at the contract bid price per the linear foot, which price shall include the cost of all labor, materials, tools, and incidentals necessary to complete the work.

Ductile iron fittings, measured as prescribed above, will be paid for at the contract unit price per pound, which price shall be full compensation for furnishing all labor, materials, tools, and incidentals necessary to complete the work.

Gate Valve and Valve Box, Flushing Valve, Fire Hydrant Assembly, Connection to Existing Water Line, and other Valves, measured as prescribed above, will be paid for at the contract bid price per each, which price shall include the costs for all labor, materials, and all incidentals necessary to complete the work.

Testing, measured as prescribed above, will be paid for at the contract bid price per each, which price shall include the costs for all labor, materials, necessary repairs required by the failed testing and any additional testing required of an isolated section, and all incidentals necessary to complete the work.

Payment will be made under:

907-265-A:	___" _____ Pipe, Water	- per lineal foot
907-265-C:	Ductile Iron MJ Fittings	- per pound
907-265-D:	___" Gate Valve and Valve Box	- per each
907-265-F:	Fire Hydrant Assembly	- per each
907-265-H:	Initial Testing	- per each
907-265-I:	Initial Disinfection Testing	- per each
907-265-J:	Connection to Existing Water Line	- per each
907-265-L:	_____ Valve	- per each

MISSISSIPPI DEPARTMENT OF TRANSPORTATION

SPECIAL PROVISION NO. 907-304-13 **CODE: (SP)**

DATE: **06/06/2012**

SUBJECT: **Granular Courses**

Section 907-304, Granular Courses, of the 2004 Edition of the Mississippi Standard Specifications for Road and Bridge Construction is hereby amended as follows.

907-304.02--Materials. After the first paragraph of Subsection 304.02.1 on page 183, add the following.

Crushed concrete meeting the requirements of Subsection 907-703.04.3 may be used in lieu of granular courses or crushed stone courses specified in the contract. This applies to base courses, shoulders, or other required construction on a prepared foundation.

907-304.03--Construction Requirements.

907-304.03.5--Shaping, Compacting and Finishing. Delete the sixth paragraph of Subsection 304.03.5 on page 185.

Delete the first table in Subsection 304.03.5 on page 186 and substitute the following.

Granular Material Class	Lot Average	Individual Test
7,8,9 or 10	97.0	93.0
5 or 6	99.0	95.0
3 or 4	100.0	96.0
1 or 2	102.0	98.0
Crushed Courses*	99.0	95.0

* When placed on filter fabric on untreated subgrade, the individual tests and the average of the five (5) tests shall equal or exceed the following values.

Lot Average	Individual Test
96.0	92.0

907-304.05--Basis of Payment. Add the "907" prefix to the pay items listed on page 187.

MISSISSIPPI DEPARTMENT OF TRANSPORTATION

SPECIAL PROVISION NO. 907-401-7 **CODE: (SP)**

DATE: **12/02/2014**

SUBJECT: **Asphalt Pavements**

Section 401, Hot Mix Asphalt (HMA) - General, of the 2004 Edition of the Mississippi Standard Specifications for Road and Bridge Construction is hereby deleted and replaced as follows.

SECTION 907-401 - ASPHALT PAVEMENT -- GENERAL

907-401.01--Description. These specifications include general requirements that are applicable to all types of asphalt whether producing Hot Mix Asphalt (HMA) mixtures or Warm Mix Asphalt (WMA) mixtures. These specifications also include the specific requirements for each particular mixture when deviations from the general requirements are necessary.

This work consists of the construction of one or more lifts of asphalt pavement in accordance with these specifications and the specific requirements for the mixture to be produced and in reasonably close conformity with the lines, grades, thicknesses and typical sections shown on the plans or established by the Engineer.

907-401.01.1--Definitions.

Maximum Sieve Size - Maximum sieve size is the smallest sieve size at which 100 percent of the aggregate passes.

Nominal Maximum Sieve Size - The nominal maximum sieve size is one sieve size larger than the first sieve to retain more than 10 percent of the aggregate.

Maximum Density Line - The maximum density line is a straight line plot on the FHWA 0.45 power gradation chart which extends from the zero origin point of the chart through the plotted point of the combined aggregate gradation curve on the nominal maximum sieve size.

Mechanically Fractured Face - An angular, rough, or broken surface of an aggregate particle created by crushing as determined by ASTM Designation: D 5821.

907-401.02--Materials.

907-401.02.1--Component Materials.

907-401.02.1.1--General. Component materials will be conditionally accepted at the plant subject to later rejection if incorporated in a mixture or in work which fails to meet contract requirements.

907-401.02.1.2--Aggregates. The source of aggregates shall meet the applicable requirements of Section 703.

907-401.02.1.2.1--Coarse Aggregate Blend. Mechanically fractured faces by weight of the combined mineral aggregate coarser than the No. 4 sieve:

Mixture	Percent Fractured Faces, minimum
25-mm	70, one-face
19-mm *	80, one-face
12.5-mm	90, two-face
9.5-mm	90, two-face
4.75-mm	90, two-face

* When used on routes requiring polymer modified asphalt, the top intermediate lift (19-mm mixture), including travel lane and adjacent lane, shall have at least 90 percent two fractured faces minimum. When placed on an existing Portland Cement Concrete surface, all intermediate lifts (19-mm mixture) shall have at least 90 percent fractured two faces minimum.

The maximum percentage by weight of flat and elongated particles, for all mixes other than 4.75-mm, maximum to minimum dimension greater than 5, shall not exceed 10% for all mixtures. This shall be determined in accordance with ASTM Designation: D 4791, Section 8.4, on the combined mineral aggregate retained on the 3/8" sieve.

907-401.02.1.2.2--Fine Aggregate Blend. Of all the material passing the No. 8 sieve and retained on the No. 200 sieve, not more than 60 percent shall pass the No. 30 sieve.

Uncrushed natural sand shall pass the 3/8" sieve and may be used, excluding the content in RAP, in the percentages of the total mineral aggregate by weight set out in the following table:

Mixture	Maximum Percentage of Natural Sand by Total Weight of Mineral Aggregate		
	HT	MT	ST
25-mm	10	10	20
19-mm	10	10	20
12.5-mm	10	10	20
9.5-mm	10	10	10
4.75-mm	25	30	35

907-401.02.1.2.3--Combined Aggregate Blend.

Design Master Range

Mixture:	25-mm	19-mm	12.5-mm	9.5-mm	4.75-mm
Nominal Maximum Sieve Size:	1 inch	3/4 inch	1/2 inch	3/8 inch	1/4 inch
Sieve Size	Percent Passing				
1½ inch	100				
1 inch	90-100	100			
¾ inch	89 max.	90-100	100		
½ inch	-	89 max.	90-100	100	100
3/8 inch	-	-	89 max.	90-100	95-100
No. 4	-	-	-	89 max.	90-100
No. 8	16-50	18-55	20-60	22-70	-
No. 16	-	-	-	-	30-60
No. 200	4.0-9.0	4.0-9.0	4.0-9.0	4.0-9.0	6.0-12.0

For MT and HT mixtures, the combined aggregate gradation of the job mix formula, when plotted on FHWA 0.45 power chart paper, shall fall entirely below the Maximum Density Line on all sieve sizes smaller than the No. 4 sieve. However, MT and HT mixtures having a minimum fine aggregate angularity index of 44.0, per ASTM Designation: C1252, Method A, may be designed above the maximum density line.

The 9.5-mm mixtures shall have a minimum fine aggregate angularity of 44.0 for HT and MT mixtures and 40.0 for ST mixtures when tested on combined aggregate in accordance with ASTM Designation: C1252 Method A. The 4.75-mm mixtures shall have a minimum fine aggregate angularity of 45.0 for all design levels when tested on combined aggregate in accordance with ASTM Designation: C 1252, Method A.

The minus No. 40 fraction of the combined aggregate shall be non-plastic when tested according to AASHTO Designation: T 90. The clay content for the combined aggregate for underlying layers shall not exceed 1.0 percent, and for the top layer shall not exceed 0.5 percent by weight of the total mineral aggregate when tested according to AASHTO Designation: T 88.

907-401.02.1.3--Bituminous Materials. Bituminous materials shall meet the applicable requirements of Section 702 for the grade specified.

Tack coat shall be the same neat grade asphalt cement used in the mixture being placed or those materials specified for tack coat in Table 410-A on the last page of Section 410. Emulsified asphalt shall not be diluted without approval of the Engineer.

907-401.02.1.4--Blank.

907-401.02.1.5--Hydrated Lime. Hydrated lime shall meet the requirements of Subsection

714.03.2 for lime used in soil stabilization.

907-401.02.1.6--Asphalt Admixtures. Additives for liquid asphalt, when required or permitted, shall meet the requirements of Subsection 702.08.

907-401.02.1.7--Polymers. Polymers for use in polymer modified asphalt pavements shall meet the requirements of Subsection 702.08.3.

907-401.02.2--WMA Products and Processes. The Department will maintain a list of qualified WMA products and processes. No product or process shall be used unless it appears on this list.

The Contractor may propose other products or processes for approval by the Product Evaluation Committee. Documentation shall be provided to demonstrate laboratory performance, field performance, and construction experience.

907-401.02.3--Composition of Mixtures.

907-401.02.3.1--General. Unless otherwise specified or permitted, the asphalt shall consist of a uniform mixture of asphalt, aggregate, hydrated lime and, when required or necessary to obtain desired properties, antistripping agent and/or other materials.

The total amount of crushed limestone aggregate for mixtures, excluding shoulders, when used in the top lift, shall not exceed 50 percent of the total combined aggregate by weight.

Hydrated lime shall be used in all asphalt at the rate of one percent (1%) by weight of the total dry aggregate including aggregate in RAP, if used. The aggregate, prior to the addition of the hydrated lime, shall contain sufficient surface moisture. If necessary, the Contractor shall add moisture to the aggregate according to the procedures set out in Subsection 907-401.03.2.1.2.

The Contractor shall obtain a shipping ticket for each shipment of hydrated lime. The Contractor shall provide the District Materials Engineer with a copy of each shipping ticket from the supplier, including the date, time and weight of hydrated lime shipped and used in hot mix asphalt production. An amount equal to twenty-five percent (25%) of the total value of asphalt items performed during the initial estimate period in which the Contractor fails to submit the hydrated lime shipping tickets to the District Materials Engineer will be withheld from the Contractor's earned work. Non-conformance with this specification for successive estimate period(s) will result in the total value (100%) of asphalt items performed during this period(s) being withheld from the Contractor's earned work. Monies withheld for this non-conformance will be released for payment on the next monthly estimate following the date the submittal of hydrated lime shipping tickets to the District Materials Engineer is brought back into compliance with this specification.

Mixtures will require the addition of an antistripping agent when the Tensile Strength Ratio (MT-63) and/or the Boiling Water Test (MT-59) fail to meet the following criteria.

Tensile Strength Ratio (TSR - MT-63)
Wet Strength / Dry Strength ..... 85 percent minimum
Interior Face Coating ..... 95 percent minimum
Boiling Water Test (MT-59)
Particle Coating ..... 95 percent minimum

Reclaimed asphalt pavement (RAP) materials may be used in the production of asphalt in the percentages of the total mix by weight set out in the following table:

Asphalt Mixture	Maximum Percentage of RAP by total weight of mix
4.75-mm	0
9.5-mm	20 *
12.5-mm Surface Lift	20 *
12.5-mm Underlying Lift	30
19-mm	30
25-mm	30

* At a minimum, RAP shall be processed and/or screened such that the RAP material size does not exceed the nominal maximum sieve size for the mixture specified.

During asphalt production, the RAP shall pass through a maximum 2-inch square sieve located in the asphalt plant after the RAP cold feed bin and prior to the RAP weighing system.

Crushed reclaimed concrete pavement may be used as an aggregate component of all asphalt pavements. When crushed reclaimed concrete pavement is used as an aggregate component, controls shall be implemented to prevent segregation. Crushed reclaimed concrete pavement aggregate shall be separated into coarse and fine aggregate stockpiles using the 3/8-inch or 1/2-inch sieve as a break-point unless otherwise approved by the Engineer in writing.

907-401.02.3.1.1--Mixture Properties.

ALL MIXTURES	Percent of Maximum Specific Gravity (Gmm)
N_{Design}	96.0
$N_{Initial}$	Less than 90.0
$N_{Maximum}$	Less than 98.0

VMA CRITERIA	Minimum percent
25-mm mixture	12.0
19-mm mixture	13.0
12.5-mm mixture	14.0
9.5-mm mixture	15.0
4.75-mm mixture	16.0

Mixtures with VMA more than two percent higher than the minimum may be susceptible to

flushing and rutting; therefore, unless satisfactory experience with high VMA mixtures is available, mixtures with VMA greater than two percent above the minimum should be avoided.

The specified VFA range for 4.75-mm nominal maximum size mixtures for design traffic levels >3 million ESAL's (HT Mixtures) shall be 75 to 78 percent, for design traffic levels of 1.0 to 3 million ESAL's (MT mixtures) 65 to 78 percent, and for design traffic levels of <1.0 million ESAL's (ST mixtures) 65 to 78 percent.

DUST/BINDER RATIO for 4.75-mm mixtures
Percent Passing No.200 / Effective Binder Percent ..... 0.9 to 2.0

DUST/BINDER RATIO for 9.5-mm, 12.5-mm, 19-mm & 25-mm mixtures
Percent Passing No.200 / Effective Binder Percent ..... 0.8 to 1.6

907-401.02.3.2--Job Mix Formula. The job mix formula shall be established in accordance with Mississippi Test Method: MT-78, where N represents the number of revolutions of the gyratory compactor.

Compaction Requirements:	$N_{Initial}$	N_{Design}	$N_{Maximum}$
High Type (HT) Mixtures			
19-mm, 12.5-mm, 9.5-mm & 4.75-mm	7	85	130
Medium Type (MT) Mixtures			
19-mm, 12.5-mm, 9.5-mm & 4.75-mm	7	65	100
All Standard Type (ST) Mixtures;			
25-mm HT & MT Mixtures	6	50	75

At least 10 working days prior to the proposed use of each mixture, the Contractor shall submit in writing to the Engineer a proposed job-mix formula or request the transfer of a verified job-mix formula as set forth in the latest edition of MDOT's Field Manual for HMA and SOP TMD-11-78-00-000. The proposed job-mix formula shall indicate whether the mixture will be produced as HMA or WMA. The process or product used to produce WMA should also be noted on the proposed documentation for the job-mix formula. The job-mix formula shall be signed by a Certified Mixture Design Technician (CMDT).

The Department will perform the tests necessary for review of a proposed job-mix formula for each required mixture free of charge one time only. A charge will be made for additional job-mix formulas submitted by the Contractor for review.

Review of the proposed job-mix formula will be based on percent maximum specific gravity at $N_{Initial}$, N_{Design}, and $N_{Maximum}$, VMA @ N_{Design}, resistance to stripping, and other criteria specified for the mixture.

The mixture shall conform thereto within the range of tolerances specified for the particular

mixture. No change in properties or proportion of any component of the job-mix formula shall be made without permission of the Engineer. The job-mix formula for each mixture shall be in effect until revised in writing by the Engineer.

A job-mix formula may be transferred to other contracts in accordance with conditions set forth in the Department's Field Manual for HMA.

The Contractor shall not place any asphalt prior to receiving "tentative" approval and a MDOT design number from the Central Laboratory.

When a change in source of materials, unsatisfactory mixture production results (such as segregation, bleeding, shoving, rutting over ⅛", raveling & cracking) or changed conditions make it necessary, a new job-mix formula will be required. The conditions set out herein for the original job-mix formula are applicable to the new job-mix formula.

In the event the Contractor wishes to change from an approved HMA job-mix formula to WMA or an approved WMA job-mix formula to HMA, the Contractor shall submit the proposed change in writing to the Engineer at least 10 working days prior to the proposed change. If no changes (other than the plant production temperature) are to be made to the job-mix formula, a new MDOT design number will be assigned by the MDOT Central Laboratory.

907-401.02.4--Substitution of Mixture. The substitution of a one (1) size finer mixture for an underlying lift shall require written permission of the State Construction Engineer, except no substitution of a 4.75-mm mixture will be allowed. A 9.5-mm mixture may be substituted for the 12.5-mm mixture designated on the plans as the top lift or pre-leveling. The 19-mm mixture may be substituted for the 25-mm mixture in trench widening work. Any substitution of mixtures shall be of the same type. No other substitutions will be allowed. The quantity of substituted mixture shall be measured and paid for at the contract unit price for the mixture designated on the plans. The substitution of any mixture will be contingent on meeting the required total structure thickness and maintaining the minimum and/or maximum laying thickness for the particular substituted mixture as set out in the following table.

Mixture	Single Lift Laying Thickness Inches	
	Minimum	Maximum
25-mm	3	4
19-mm	2¼	3½
12.5-mm	1½	2½
9.5-mm	1	1½
4.75-mm	½	¾

907-401.02.5--Contractor's Quality Management Program.

907-401.02.5.1--General. The Contractor shall have full responsibility for quality management

and maintain a quality control system that will furnish reasonable assurance that the mixtures and all component materials incorporated in the work conform to contract requirements. The Contractor shall have responsibility for the initial determination and all subsequent adjustments in proportioning materials used to produce the specified mixture. Adjustments to plant operation and spreading and compaction procedures shall be made immediately when results indicate that they are necessary. Mixture produced by the Contractor without the required testing or personnel on the project shall be subject to removal and replacement by the Contractor at no additional cost to the State.

907-401.02.5.2--Personnel Requirements. The Contractor shall provide at least one Certified Asphalt Technician-I (CAT-I) full-time during asphalt production at each plant site used to furnish material to the project. Sampling shall be conducted by a certified technician or by plant personnel under the direct observation of a certified technician. All testing, data analysis and data posting will be performed by the CAT-I or by an assistant under the direct supervision of the CAT-I. The Contractor shall have a Certified Asphalt Technician-II (CAT-II) available to make any necessary process adjustments. Technician certification shall be in accordance with MDOT SOP TMD-22-10-00-000, MDOT HMA Technician Certification Program. An organizational chart, including names, telephone numbers and current certification, of all those responsible for the quality control program shall be posted in the Contractor's laboratory while the asphaltic paving work is in progress.

907-401.02.5.3--Testing Requirements. As a minimum, the Contractor's quality management program shall include the following:

(a) Bituminous Material. Provide Engineer with samples in a sealed one quart metal container at the frequency given in MDOT SOP TMD-20-04-00-000.

(b) Mechanically Fractured Face. Determine mechanically fractured face content of aggregates retained on the No. 4 sieve, at a minimum of one test per day of production.

(c) Mixture Gradation. Conduct extraction tests for gradation determination on the mixture. Sample according to the frequency in paragraph (i) and test according to Mississippi Test Method MT-31.

(d) Total Voids and VMA. Determine total voids and voids in mineral aggregate (VMA), at N_{Design}, from the results of bulk specific gravity tests on laboratory compacted specimens. Sample according to the sampling frequency in paragraph (i) and test according to the latest edition of MDOT's Field Manual for HMA.

(e) Asphalt Content. Sample according to the sampling frequency in paragraph (i). Determine the asphalt content using one of the following procedures.

(1) Nuclear gauge per Mississippi Test Method MT-6.
(2) Incinerator oven per AASHTO Designation: T 308, Method A.

(f) Stripping Tests. Conduct a minimum of one stripping test at the beginning of each job-

mix production and thereafter, at least once per each two weeks of production according to Mississippi Test Method: MT-63 and one stripping test per day of production according to Mississippi Test Method: MT-59. Should either the TSR (MT-63) or the boiling water (MT-59) stripping tests fail, a new antistrip additive or rate shall be established or other changes made immediately that will result in a mixture which conforms to the specifications; otherwise, production shall be suspended until corrections are made.

(g) Density Tests. For 25-mm, 19.5-mm, 12.5-mm & 9.5-mm mixtures, conduct density tests as necessary to control and maintain required compaction according to Mississippi Test Method: MT-16, Method C (nuclear gauge), or AASHTO Designation: T 166. Note - The nuclear gauge may be correlated, at the Contractor's option, with the average of a minimum of five pavement sample densities. For 4.75-mm mixtures, conduct density tests as necessary to control and maintain required compaction according to AASHTO Designation: T 166.

(h) Quality Control Charts. Plot the individual test data, the average of the last four tests and the control limits for the following items as a minimum:

Mixture Gradation (Percent Passing) Sieves:
1/2-inch, 3/8-inch, No. 8, No. 16, No. 30 and No. 200.
Asphalt Content, Percent
Maximum Specific Gravity, G_{mm}
Total Voids @ N_{Design}, Percent
VMA @ N_{Design}, Percent

NOTE: For 4.75-mm mixtures, Quality Control Charts for mixture gradation are not required on the No. 8 and No. 30 sieves. For 4.75-mm mixtures, as a minimum, Quality Control Charts for mixture gradation shall be kept on the 3/8-inch, No. 16 and No. 200 sieves. For all mixtures other than 4.75-mm, Quality Control Charts for mixture gradation are not required on the No. 16 sieve.

Keep charts up-to-date and posted in a readily observable location. Charts may be kept on a computer, however, the charts shall be printed out a minimum of once each production day and displayed in the laboratory. Note any process changes or adjustments on the Air Voids chart.

(i) Sampling Frequency. Conduct those tests as required above at the following frequency for each mixture produced based on the estimated plant tonnage at the beginning of the day.

Total Estimated Production, tons	Number of Tests
50-800	1
801-1700	2
1701-2700	3
2701+	4

NOTE: Material placed in a storage silo from a previous day's production shall be randomly sampled and tested when removed for placement on the roadway. Such sample(s) shall be independent of the day's production sampling frequency and shall be used in calculating the four (4) sample running average.

(j) Sample Requirements. Obtain the asphalt mixture samples from trucks at the plant. Obtain aggregate samples from cold feed bins or aggregate stockpile. Save a split portion of all mixture samples at the laboratory site in a dry and protected location for 14 calendar days. At the completion of the project, the remaining samples may be disposed of with the approval of the Engineer.

The above testing frequencies are for the estimated plant production for the day. If production is discontinued or interrupted, the tests will be conducted at the previously established sample tonnage points for the materials that are actually produced. If the production exceeds the estimated tonnage, sampling and testing will continue at the testing increments previously established for the day. A testing increment is defined as the estimated daily tonnage divided by the required number of tests from the table in Subsection 907-401.02.5.3 paragraph (i).

In addition to the above program, the following tests shall be conducted on the first day of production and once for every eight production samples thereafter, with a minimum of one test per production week.

Aggregate Stockpile Gradations per AASHTO Designations: T-11 and T-27.

Reclaimed Asphalt Pavement (RAP) Gradation per Mississippi Test Method MT-31.

Fine Aggregate Angularity for all 4.75-mm and 9.5-mm mixtures and all MT and HT mixtures designed above the maximum density line per ASTM Designation: C 1252, Method A.

Testing of the aggregate and RAP stockpiles during production will be waived provided the Contractor provides the Engineer with gradation test results for the materials in the stockpile determined during the building of the stockpiles. The test results provided shall represent a minimum frequency of one per one thousand tons of material in the stockpile. If the Contractor continues to add materials to the stockpile during asphalt production, the requirements for gradation testing during production are not waived.

907-401.02.5.4--Documentation. The Contractor shall document all observations, records of inspection, adjustments to the mixture, and test results on a daily basis. All tests conducted by the Contractor in accordance with Subsection 907-401.02.5.3(h) shall be included in the running average calculations. If single tests are performed as a check on individual asphalt properties, between regular samples, without performing all tests required in Subsection 907-401.02.5.3(h), the results of those individual tests shall not be included in the running average calculations for that particular property. The Contractor shall record the results of observations and records of inspection as they occur in a permanent field record. The Contractor shall record all process

adjustments and job mix formula (JMF) changes on the air void charts. The Contractor shall provide copies of all test data sheets and the daily summary reports on the appropriate Mississippi DOT forms to the Engineer on a daily basis. The Contractor shall provide a written description of any process change, including blend proportions, to the Engineer as they occur. Information provided to the Engineer must be received in the Engineer's office by no later than 9:00 AM the day after the asphalt is produced. Fourteen days after the completion of the placement of the asphalt, the Contractor shall provide the Engineer with the original testing records and control charts in a neat and orderly manner.

907-401.02.5.5--Control Limits. The following control limits for the job mix formula (JMF) and warning limits are based on a running average of the last four data points.

Item	JMF Limits	Warning Limits
Sieve - % Passing		
1/2-inch	± 5.5	± 4.0
3/8-inch	± 5.5	± 4.0
No. 8	± 5.0	± 4.0
No. 16, for 4.75-mm mixtures ONLY	± 4.0	± 3.0
No. 30	± 4.0	± 3.0
No. 200	± 1.5	± 1.0
Asphalt Content, %	-0.3 to +0.5	-0.2 to + 0.4
Total Voids @ N_{Design}, %	± 1.3	± 1.0
VMA @ N_{Design}, %	– 1.5	– 1.0

907-401.02.5.6--Warning Bands. Warning bands are defined as the area between the JMF limits and the warning limits.

907-401.02.5.7--Job Mix Formula Adjustments. A request for a JMF adjustment signed by a CAT-II may be made to the Engineer by the Contractor. Submit sufficient testing data with the request to justify the change. The requested change will be reviewed by the State Materials Engineer for the Department. If current production values meet the mixture design requirements, a revised JMF will be issued. Adjustments to the JMF shall conform to the latest edition of MDOT's Field Manual for HMA. Adjustments to the JMF to conform to actual production shall not exceed the tolerances specified for the JMF limits. Regardless of such tolerances, any adjusted JMF gradation shall be within the design master range for the mixture specified. The JMF asphalt content may only be reduced if the production VMA meets or exceeds the minimum design VMA requirements for the mixture being produced.

907-401.02.5.8--Actions and Adjustments. Based on the process control test results for any property in question, the following actions shall be taken or adjustments made when appropriate:

(a) When the running average trends toward the warning limits, the Contractor shall consider taking corrective action. The corrective action, if any, shall be documented. All tests shall be part of the contract files and shall be included in the running average

calculations.

(b) The Contractor shall notify the Engineer whenever the running average exceeds the warning limits.

(c) If two consecutive running averages exceed the warning limit, the Contractor shall stop production and make adjustments. Production shall only be restarted after notifying the Engineer of the adjustments made.

(d) If the adjustment made under (c) improves the process such that the running average after four additional tests is within the warning limits, the Contractor may continue production with no reduction in payment.

(e) If the adjustment made under (c) does not improve the process and the running average after four additional tests stays in the warning band, the mixture will be considered unsatisfactory. Reduced payment for unsatisfactory mixtures will be applied starting from the stop point to the point when the running average is back within the warning limits in accordance with Subsection 907-401.02.6.3.

(f) Failure to stop production and make adjustments when required shall subject all mixture produced from the stop point to the point when the running average is back within the warning limits to be considered unsatisfactory. Reduced payment for unsatisfactory mixtures will be applied in accordance with Subsection 907-401.02.6.3.

(g) If the running average exceeds the JMF limits, the Contractor shall stop production and make adjustments. Production shall only be restarted after notifying the Engineer of the adjustments made.

(h) All materials for which the running average exceeds the JMF limits will be considered unacceptable and shall be removed and replaced by the Contractor at no additional cost to the State. The Engineer will determine the quantity of material to be replaced based on a review of the individual testing data which make up the running average in question and an inspection of the completed pavement. If the Engineer decides to leave the mixture in place because of special circumstances, the quantity of mixture, as defined above, will be paid for in accordance with Subsection 907-401.02.6.3.

(i) Single test results shall be compared to 1.7 times the warning and JMF limits. If the test results verified by QA testing (within allowable differences in Subsection 907-401.02.6.2) exceed these limits, the pay factor provided in Subsection 907-401.02.6.3 will apply for the quantity of material represented by the test(s). Single test limits will be used for the acceptance of projects when insufficient tonnage is produced to require four (4) Contractor's tests.

(j) The above corrective action will also apply for a mixture when the Contractor's testing data has been proven incorrect. The Contractor's data will be considered incorrect when; 1) the Contractor's tests and the Engineer's tests do not agree within the allowable differences given in Subsection 907-401.02.6.2 and the difference can not be resolved, or 2) the Engineer's tests indicates that production is outside the JMF limits and the results have been verified by the Materials Division. The Engineer's data will be used in place of the Contractor's data to determine the appropriate pay factor.

907-401.02.6--Standards of Acceptance.

907-401.02.6.1--General. Acceptance for mixture quality (VMA and total voids @ N_{Design}, gradation, and asphalt content) will be based on random samples tested in accordance with the

latest edition of MDOT's Field Manual for HMA. Pavement densities and smoothness will be accepted by lots as set out in Subsections 907-401.02.6.4 and 907-401.02.6.5.

907-401.02.6.2--Assurance Program for Mixture Quality. The Engineer will conduct a quality assurance program. The quality assurance program will be accomplished as follows:

1) Conducting verification tests.
2) Validate Contractor test results.
3) Periodically observing Contractor quality control sampling and testing.
4) Monitoring required quality control charts and test results.
5) Sampling and testing materials at any time and at any point in the production or laydown process.

The rounding of all test results will be in accordance with Subsection 700.04.

The Engineer will conduct verification tests on samples taken by the Contractor under the direct supervision of the Engineer at a time specified by the Engineer. The frequency will be equal to or greater than ten percent (10%) of the tests required for Contractor quality control and the data will be provided to the Contractor within two asphalt mixture production days after the sample has been obtained by the Engineer. At least one sample shall be tested from the first two days of production. All testing and data analysis shall be performed by a Certified Asphalt Technician-I (CAT-I) or by an assistant under the direct supervision of the CAT-I. Certification shall be in accordance with the *MDOT HMA Technician Certification Program* chapter in the Materials Division Inspection, Testing, and Certification Manual. The Department shall post a chart giving the names and telephone numbers for the personnel responsible for the assurance program.

The Engineer shall be allowed to inspect Contractor testing equipment and equipment calibration records to confirm both calibration and condition. The Contractor shall calibrate and correlate all testing equipment in accordance with the latest versions of the Department's Test Methods and AASHTO Designation: R 18.

Random differences between the Engineer's verification tests and the current running average of four quality control tests at the time of obtaining the verification sample will be considered acceptable if within the following limits:

Item	Allowable Differences
Sieve - % Passing	
3/8-inch and above	6.0
No. 4	5.0
No. 8	4.0
No. 16, for 4.75-mm mixtures ONLY	3.5
No. 30	3.5
No. 200	2.0
AC Content	0.4
Specimen Bulk SG, Gmb @ N_{Design}	0.030
Maximum SG, Gmm	0.020

If four quality control tests have not been tested prior to the time of the first verification test, the verification test results will be compared to the average of the preceding quality control tests. If the verification test is the first material tested on the project or if a significant process adjustment was made just prior to the verification test, the verification test results will be compared to the average of four subsequent quality control test results. For all other cases after a significant process adjustment, the verification test results will be compared to the average of the preceding quality control tests (taken after the adjustment) as in the case of a new project start-up when four quality control tests are not available.

In the event that; 1) the comparison of the Contractor's running average quality control data and Engineer's quality assurance verification test results are outside the allowable differences in the above table, or 2) if a bias exists between the results, such that one of the results is predominately higher or lower than the other, and the Engineer's results fail to meet the JMF control limits, the Engineer will investigate the reason immediately. As soon as the need for an investigation becomes known, the Engineer will increase the quality assurance sampling rate to the same frequency required for Contractor testing. The additional samples obtained by the Engineer may be used as part of the investigation process or for routine quality assurance verification tests. The Engineer's investigation may include testing of the remaining quality control split samples, review and observation of the Contractor's testing procedures and equipment, and a comparison of split sample test results by the Contractor quality control laboratory, Department quality assurance laboratory and the Materials Division laboratory. The procedures outlined in the latest edition of MDOT's Field Manual for HMA may be used as a guide for the investigation. In the event that the Contractor's results are determined to be incorrect, the Engineer's results will be used for the quality control data and the appropriate payment for the mixture will be based on the procedures specified in Subsection 907-401.02.5.8(j).

The Engineer will periodically witness the sampling and testing being performed by the Contractor. The Engineer, both verbally and in writing, will promptly notify the Contractor of any observed deficiencies. When differences exist between the Contractor and the Engineer which cannot be resolved, a decision will be made by the State Materials Engineer, acting as the referee. The Contractor will be promptly notified in writing of the decision. If the deficiencies are not corrected,

the Engineer will stop production until corrective action is taken.

907-401.02.6.3--Acceptance Procedure for Mixture Quality. All obviously defective material or mixture will be subject to rejection by the Engineer. Such defective material or mixture shall not be incorporated into the finished work. If the defective material has already been placed in the work, the material shall be removed and replaced at no additional cost to the State.

The Engineer will base final acceptance of the asphalt mixture production on the results of the Contractor's testing for total voids and VMA @ N_{Design}, gradation, and asphalt content as verified by the Engineer in the manner hereinbefore described and the uniformity and condition of the completed pavement. Areas of pavement that exhibit non-uniformity or failures, materials or construction related, such as but not limited to segregation, bleeding, shoving, rutting over ⅛", raveling, slippage, or cracking will not be accepted. Such areas will be removed and replaced at no additional cost to the State.

Bituminous mixture placed prior to correction for deficiencies in VMA and total voids @ N_{Design}, gradation, or asphalt content, as required in Subsection 907-401.02.5.8 and determined by the Engineer satisfactory to remain in place will be paid for in accordance with the following pay factors times the contract unit price per ton.

Pay Factor for Mixture Quality *

Item	Produced in Warning Bands	Produced Outside JMF Limits, Allowed to Remain in Place
Gradation	0.90	0.75
Asphalt Content	0.85	0.75
Total Voids @ N_{Design}	0.70	0.50
VMA @ N_{Design}	0.90	0.75

* The minimum single payment will apply.

907-401.02.6.4--Acceptance Procedure for Density. Each completed lift will be accepted with respect to compaction on a lot to lot basis from density tests performed by the Department. For normal production days, divide the production into approximately equal lots as shown in the following table. When cores are being used for the compaction evaluation, randomly obtain one core from each lot. When the nuclear density gauge is being used for compaction evaluation, obtain two random readings from each lot and average the results. See Chapter 7 of the latest edition of MDOT's Field Manual for HMA for more details. Additional tests may be required by the Engineer to determine acceptance of work appearing deficient. The Contractor shall furnish and maintain traffic control for all compaction evaluations, including coring, required in satisfying specified density requirements.

Lot Determination

Daily Production - Tons	Number of Lots
0 - 300	1
301 - 600	2
601 - 1000	3
1001 - 1500	4
1501 - 2100	5
2101 - 2800	6
2801+	7

907-401.02.6.4.1--Roadway Density. The density requirement for each completed lift on a lot to lot basis from density tests performed by the Department shall be as follows:

1. For all leveling lifts, when full lane width and with a thickness as specified in the table in Subsection 907-401.02.4, the required lot density shall be 92.0 percent of maximum density.

2. For all single lift overlays, with or without leveling and/or milling, the required lot density shall be 92.0 percent of maximum density.

3. For all multiple lift overlays of two (2) or more lifts excluding leveling lifts, the required lot density of the bottom lift shall be 92.0 percent of maximum density. The required lot density for all subsequent lifts shall be 93.0 percent of maximum density.

4. For all pavements on new construction, the required lot density for all lifts shall be 93.0 percent of maximum density.

When it is determined that the density for a lot is below the required density (93.0 percent or 92.0 percent) but not lower than 91.0 or 90.0 percent of maximum density, respectively, the Contractor will have the right to remove and replace the lot(s) not meeting the specified density requirements in lieu of accepting reduced payment for the lot(s).

When it is determined that the density for a lot is above 96.0 percent, the Engineer shall notify the Contractor who will make plant adjustments to resolve the problem.

When it is determined that the density for a lot is below 91.0 or 90.0 percent, respectively, the lot(s), or portions thereof shall be removed and replaced in accordance with Chapter 7 of the latest edition of MDOT's Field Manual for HMA at no additional cost to the State. A corrected lot will be retested for approval. No resampling will be performed when pavement samples are used for determining density.

At any time the average daily compaction (the total of the percent compaction for the lots produced in one day divided by the total number of lots for the day) does not meet the required percent compaction or more for two consecutive days, the Contractor shall notify the Engineer of proposed changes to the compactive effort. If the average daily compaction does not meet the

required percent compaction or more for a third consecutive day, the Contractor shall stop production until compaction procedures are established to meet the specified density requirements.

Each lot of work found not to meet the density requirement of 92.0% or 93% of maximum density, respectively, may remain in place with a reduction in payment as set out in the following tables:

PAYMENT SCHEDULE FOR COMPACTION OF 92.0 PERCENT OF MAXIMUM DENSITY

Pay Factor	Lot Density ** % of Maximum Density
1.00	92.0 and above
0.90	91.0 - 91.9
0.70	90.0 - 90.9

** Any lot or portion thereof with a density of less than 90.0 percent of maximum density shall be removed and replaced at no additional cost to the State.

PAYMENT SCHEDULE FOR COMPACTION OF 93.0 PERCENT OF MAXIMUM DENSITY

Lot Density *** Pay Factor	% of Maximum Density
1.00	93.0 and above
0.90	92.0 - 92.9
0.70	91.0 - 91.9

*** Any lot or portion thereof with a density of less than 91.0 percent of maximum density shall be removed and replaced at no additional cost to the State.

The compaction pay factors and mixture quality pay factor, as described in Subsection 907-401.02.6.3, will each apply separately. However, the combined pay factor shall not be less than 0.50 for any mixture allowed to remain in place.

907-401.02.6.4.2--Trench Widening Density. The density for trench widening on a lot to lot basis shall be determined from density tests performed by the Department using pavement samples (cores).

When it is determined that the density for a trench widening lot is below 89.0 percent but not lower than 88.0 percent of maximum density, the Contractor will have the right to remove and replace the lot(s) not meeting the specified density requirements in lieu of accepting reduced payment for the lot(s).

When it is determined that the density for a trench widening lot is above 95.0 percent, the Engineer shall notify the Contractor who will make plant adjustments to resolve the problem.

When it is determined that the density for a trench widening lot is below 88.0 percent, the lot(s), or portions thereof shall be removed and replaced in accordance with Chapter 7 of the latest edition of MDOT's Field Manual for HMA at no additional cost to the State. A corrected lot will be retested for approval. No resampling will be performed when pavement samples are used for determining density.

At any time the daily compaction (the total of the percent compaction for the lots produced in one day divided by the total number of lots for the day) does not meet 89.0 percent compaction or more for two consecutive days, the Contractor shall notify the Engineer of proposed changes to the compactive effort. If the average daily compaction does not meet 89.0 percent compaction or more for a third consecutive day, the Contractor shall stop production until compaction procedures are established to meet the specified density requirement.

Each lot of trench widening work found not to meet the density requirement of 91.0 percent of maximum density may remain in place with a reduction in payment as set out in the following table:

PAYMENT SCHEDULE FOR COMPACTION
TRENCH WIDENING WORK

Pay Factor	Lot Density *** % of Maximum Density
1.00	89.0 and above
0.50	88.0 - 88.9

*** Any lot or portion thereof with a density of less than 88.0 percent of maximum density shall be removed and replaced at no additional cost to the State.

The compaction pay factors and mixture quality pay factor, as described in Subsection 907-401.02.6.3, will each apply separately. However, the combined pay factor shall not be less than 0.50 for any mixture allowed to remain in place.

907-401.02.6.5--Blank.

907-401.02.6.6--Blank.

907-401.02.6.7--Surface Correction. Corrective work to sections exceeding short continuous interval thresholds reported by ProVal, as described in Subsection 907-403.03.2.1, shall consist of diamond grinding in accordance with these specifications or methods approved by the Engineer. All surface areas corrected by grinding shall be sealed with a sealant approved by the Engineer.

907-401.02.6.7.1--Diamond Grinding. Grinding of asphalt surfaces shall consist of diamond

grinding the existing asphalt pavement surface to remove surface distortions to achieve the specified surface smoothness requirements.

907-401.02.6.7.2--Equipment. The grinding equipment shall be a power driven, self-propelled machine that is specifically designed to smooth and texture pavement surfaces with diamond blades. The effective wheel base of the machine shall not be less than 12.0 feet. It shall have a set of pivoting tandem bogey wheels at the front of the machine and the rear wheels shall be arranged to travel in the track of the fresh cut pavement. The center of the grinding head shall be no further than 3.0 feet forward from the center of the back wheels.

The equipment shall be of a size that will cut or plane at least two feet (2') wide. It shall also be of a shape and dimension that does not encroach on traffic movement outside of the work area. The equipment shall be capable of grinding the surface without causing spalls at joints, or other locations.

907-401.02.6.7.3--Construction. The construction operation shall be scheduled and proceed in a manner that produces a uniform finish surface. Grinding will be accomplished in a manner to provide positive lateral drainage by maintaining a constant cross-slope between grinding extremities in each lane.

The operation shall result in pavement that conforms to the typical cross-section and the requirements specified in Subsection 907-401.02.6.7.4. It is the intent of this specification that the surface smoothness characteristics be within the limits specified.

The Contractor shall establish positive means for removal of grinding residue. Solid residue shall be removed from pavement surfaces before it is blown by traffic action or wind. Residue shall not be permitted to flow across lanes used by public traffic or into gutters or drainage facilities, but may be allowed to flow into adjacent ditches.

907-401.02.6.7.4--Finished Pavement Surface. The grinding process shall produce a pavement surface that is smooth and uniform in appearance with a longitudinal line type texture. The line type texture shall contain parallel longitudinal corrugations that present a narrow ridge corduroy type appearance. The peaks of the ridges shall not be more than 1/16 inch higher than the bottoms of the grooves.

The finished pavement surface will be measured for riding quality. The grinding shall produce a riding surface which does not exceed either the specified profile index or the specified bump and dip limit.

907-401.02.6.8--Acceptance Procedure for Pavement Smoothness Using Mean Roughness Index (MRI). When compaction is completed, the lift shall have a uniform surface and be in reasonably close conformity with the line, grade and cross section shown on the plans.

The smoothness of the surface lift will be determined by using an Inertial Profiling System (IPS) to measure and record roughness data in each designated location. Roughness data for each longitudinal profile will be reported as a Mean Roughness Index (MRI). MRI is calculated by

averaging the International Roughness Index (IRI) values from the two individual wheelpath profiles. The surface shall be tested and corrected to a smoothness index as described herein with the exception of those locations or specific projects that are excluded from smoothness testing with an IPS.

The smoothness of the surface lift will be determined for traffic lanes, auxiliary lanes, climbing lane and two-way turn lanes. Areas excluded from a smoothness test with the IPS are acceleration and deceleration lanes, tapered sections, transition sections for width, shoulders, crossovers, ramps, side street returns, etc. The roadway pavement on bridge replacement projects having 1,000 feet or less of pavement on each side of the structure will be excluded from a smoothness test. Pavement on horizontal curves having a radius of less than 1,000 feet at the centerline and pavement within the super elevation transition of such curves are excluded from smoothness testing. Smoothness testing shall terminate 264 feet from each transverse joint that separates the pavement from a bridge deck, bridge approach slab or existing pavement not constructed under the contract. This shall apply to any other exceptions including, but not limited to, railroad crossings and manholes. Segments containing a considerable amount of encroachments such as intersections, manholes, curb and gutter sections, etc. may be excluded at the Project Engineer's discretion.

Initial smoothness measurements shall take place no more than 72 hours following placement of surface and must be performed at the posted speed limit or 50 miles per hour (±5 mile per hour), whichever is lower. This speed requirement will be waived for all lightweight profilers. Measurements will be made in both wheel paths of exterior and interior lanes. The wheel paths shall be designated as being located three feet (3') and nine feet (9') from centerline or longitudinal joint, respectively. Beginning and ending latitude and longitude coordinates shall be required on each smoothness surface test. Testing will also be required on sections that have been surface corrected. No smoothness testing shall be performed when there is moisture of any kind on the pavement surface. Any additional testing shall meet the requirements of Subsection 907-403.03.2.

The surface lift will be accepted on a continuous interval basis for pavement smoothness. Continuous reporting is based upon all MRI values for a specified running interval. These values are averaged and presented at the midpoint of the specified running interval. The last 15 feet of a day's lift may not be obtainable until the lift is continued and for this reason may be included in the subsequent section.

Areas of localized roughness exceeding the continuous 25-foot interval threshold described in Subsection 907-403.03.2.1 shall be corrected regardless of the 528-foot interval MRI value of the section. Surface correction by grinding shall be performed in accordance with Subsection 907-401.02.6.7. The Contractor shall also make other necessary surface corrections to ensure that the final mean roughness index of the section meets the requirements of Subsection 907-403.03.2.

Continuous sections exceeding the accepted long interval MRI value shall be corrected as specified in Subsection 403.03.4. All such corrections shall be performed at no additional costs to the State. Scheduling and traffic control will be the responsibility of the Contractor with

approval of the Engineer. All tests and corrections shall be in accordance with AASHTO R 54-10, Accepting Pavement Ride Quality When Measured Using Inertial Profiling Systems.

907-401.02.6.9--High Speed Inertial Profiling System.

907-401.02.6.9.1--General. The IPS, furnished and operated by the Contractor under the supervision of the Engineer or the Engineer's representative, shall be a dual laser high speed or lightweight vehicle meeting the requirements of AASHTO M 328-10, Standard Specification for Inertial Profiler.

907-401.02.6.9.2--Mechanical Requirements. The IPS should function independent of vehicle suspension and speed with an operational range of 15-70 mph (for high speed profilers only) and must collect data at a sample interval of no more than three inches (3"). All IPSs, operators, and combinations thereof shall be verified in accordance with AASHTO R 56-10, Standard Practice for Certification of Inertial Profiler Systems and AASHTO R 57-10, Operating Inertial Profiler Systems.

907-401.02.6.9.3--Computer Requirements. The computer measurement program must be menu driven, Windows compatible, and able to produce unfiltered profiler runs in any one of the following file formats: University of Michigan's Transportation Research Institute's (UMTRI) Engineering Research Division (*.erd) file, ProVAL's Pavement Profile (*.ppf) file, or Ames Engineering's (*.adf) file format. The computer shall have the ability to display and print data on site for verification and shall have the ability to save and transfer data via Universal Serial Bus (USB) flash drive, which shall be provided by the Contractor.

All profiler runs must be named in the following format for acceptance by the Project Engineer:

- County_Route_Direction_Lane_BeginStation_EndStation

In addition to manufacturers software; the latest version of FHWA's ProVAL software shall be installed on the IPS computer. ProVAL software is available for free download at http://www.roadprofile.com.

907-401.02.7--Nuclear Gauges.

907-401.02.7.1--Nuclear Moisture-Density Gauge. The nuclear gauge unit used to monitor density shall contain a full data processor which holds all calibration constants necessary to compute and directly display wet density, moisture, and dry density in pounds per cubic foot. The data processor shall compute and display the percent moisture and percent density based on dry weight.

907-401.02.7.2--Nuclear Asphalt Content Gauge. The Contractor shall furnish and calibrate, unless designated otherwise in the contract, a Troxler Nuclear Asphalt Content Gauge Model 3241 or updated model, or a Campbell Nuclear Asphalt Content Gauge Model AC-2 or an approved equal.

907-401.03--Construction Requirements. Mississippi DOT has adopted the "Hot-Mix Asphalt

Paving Handbook" as the guideline for acceptable asphalt construction practices.

907-401.03.1--Specific Requirements.

907-401.03.1.1--Weather Limitations - General. The mixture shall not be placed when weather conditions prevent the proper handling and finishing or the surface on which it is to be placed is wet or frozen.

When paving operations are discontinued because of rain, the mixture in transit shall be protected until the rain ceases. The surface on which the mixture is to be placed shall be swept to remove as much moisture as possible and the mixture may then be placed subject to removal and replacement at no additional cost to the State if contract requirements are not met.

907-401.03.1.1.1--Weather Limitations For HMA. At the time of placement, the air and pavement surface temperature limitations shall be equal to or exceed that specified in the following table.

TEMPERATURE LIMITATIONS

Compacted Thickness	Temperature
Less than 1½ inches	55°F
1½ inches to 2 inches	50°F
2¼ inches to 3 inches	45°F
Greater than 3 inches	40°F

907-401.03.1.1.2--Weather Limitations For WMA. The air and pavement temperature at the time of placement shall equal or exceed 40ºF, regardless of compacted lift thickness.

907-401.03.1.2--Tack Coat. Tack coat shall be applied to previously placed asphalt and between lifts, unless otherwise directed by the Engineer. Tack coat shall be applied with a distributor spray bar. A hand wand will only be allowed for applying tack coat on ramp pads, irregular shoulder areas, median crossovers, turnouts, or other irregular areas. Bituminous materials and application rates for tack coat shall be as specified in Table 410-A on page 293. Construction requirements shall be in accordance with Subsection 407.03 of the Standard Specifications.

907-401.03.1.3--Blank.

907-401.03.1.4--Density. The lot density for all dense graded pavement lifts, except as provided below for preleveling, wedging [less than fifty percent (50%) of width greater than minimum lift thickness], ramp pads, irregular shoulder areas, median crossovers, turnouts, or other areas where the established rolling pattern cannot be performed, shall not be less than the specified percent (92.0% or 93.0%) of the maximum density based on AASHTO Designation: T 209 for the day's production. For all leveling lifts, when full lane width and with a thickness as specified in the table in Subsection 907-401.02.4, the required lot density shall be 92.0 percent of maximum

density. If a job-mix formula adjustment is made during the day which affects the maximum specific gravity, calculate a new average maximum density for the lot(s) placed after the change.

Pavement core samples obtained for determining density which has a thickness less than two times the maximum size aggregate permitted by the job-mix formula will not be used as a representative sample.

Preleveling, wedging (less than fifty percent of width greater than minimum lift thickness), ramp pads, irregular shoulder areas, median crossovers, turnouts, and other areas where an established rolling pattern cannot be obtained shall be compacted to refusal densification.

907-401.03.2--Bituminous Mixing Plants.

907-401.03.2.1--Plant Requirements.

907-401.03.2.1.1--Cold Aggregate Storage. The cold storage for hydrated lime shall be a separate bulk storage bin with a vane feeder or other approved feeder system which can readily be calibrated. The system shall provide a means for easy sampling of the hydrated lime additive and verifying the quantity of lime dispensed. The feeder system shall require a totalizer.

The hydrated lime additive equipment shall be interlocked and synchronized with the cold feed controls to operate concurrently with the cold feed operation which will automatically adjust the hydrated lime feed to variations in the cold aggregate feed. A positive signal system shall be installed which will automatically shut the plant down when malfunctions cause an improper supply of hydrated lime or water.

The plant shall not operate unless the entire hydrated lime system is functioning properly.

907-401.03.2.1.2--Cold Aggregate Feed. The hydrated lime shall be dispensed dry or as a slurry directly onto the composite aggregate between the cold feed and the dryer. The slurry shall consist of 1 part hydrated lime to 3 parts water.

When hydrated lime is introduced dry, a spray bar or other approved system capable of spraying all aggregate with water shall be installed in order to maintain all aggregate at the moisture condition set out in Subsection 907-401.02.3.1 prior to addition of the hydrated lime. An alternate system for spraying the coarse aggregate stockpiles may be allowed when approved by the Engineer. The approved equipment and methods shall consistently maintain the aggregate in a uniform, surface wet condition. The moisture content of the aggregate-hydrated lime mixture, following spraying and mixing, shall be introduced into the automatic moisture controls of the plant.

The aggregate-hydrated lime mixture shall be uniformly blended by some mechanical means such as a motorized "on the belt" mixer or pug mill located between the cold feed and the dryer. Other mixing devices may be used subject to approval by the Engineer.

A maximum of forty five (45) percent of the total aggregate blend may be fed through any single

cold feed bin. If the JMF calls for more than forty five (45) percent of a specific aggregate, that aggregate must be fed through two (2) or more separate cold feed bins.

907-401.03.2.1.3--Dryer. The efficiency of drying aggregates shall be such that the moisture content of the top asphalt mixture shall not exceed 0.50 percent by weight of the total mixture, and the moisture content of all the underlying mixtures shall not exceed 0.75 percent by weight of the total mixture being produced.

907-401.03.2.1.4--Blank.

907-401.03.2.1.5--Control of Bituminous Material and Antistripping Agent. Specified bituminous materials from different manufacturers or from different refineries of a single manufacturer shall not be mixed in the plant's asphalt cement supply system storage tank and used in the work without prior written approval of the Engineer. Approval is contingent upon the Engineer's receipt of three copies of the manufacturer's certified test report(s) from the Contractor showing that the bituminous material blend conforms to the specifications.

A satisfactory method of weighing or metering shall be provided to ensure the specified quantity of bituminous material. Provisions shall be provided for checking the quantity or rate of flow. Weighing or metering devices shall be accurate within plus or minus one-half percent.

The antistripping agent shall be injected into the bituminous material immediately prior to the mixing operation with an approved in-line injector system capable of being calibrated so as to ensure the prescribed dosage.

An in-line spigot for sampling of asphalt shall be located between the asphalt storage tank and the antistripping agent in-line injector.

907-401.03.2.1.6--Thermometric Equipment. An armored thermometer of adequate range and calibrated in 5°F increments shall be fixed at a suitable location in the bituminous line near the charging valve of the mixer unit.

The plant shall be equipped with an approved dial-scale, mercury-actuated thermometer, pyrometer or other approved thermometric instrument placed at the discharge chute of the dryer to measure the temperature of the material.

When the temperature control is unsatisfactory, the Engineer may require an approved temperature-recording apparatus for better regulation of the temperature.

907-401.03.2.1.7--Screens. A scalping screen shall be used.

907-401.03.2.1.8--Dust Collector. The plant shall be equipped with a dust collector constructed to waste or return collected material. When collected material is returned, it shall be returned through a controlling device which will provide a uniform flow of material into the aggregate mixture.

907-401.03.2.1.9--Safety Requirements. A platform or other suitable device shall be provided so the Engineer will have access to the truck bodies for sampling and mixture temperature data.

907-401.03.2.1.10--Blank.

907-401.03.2.1.11--Truck Scales. The specifications, tolerances and regulations for commercial weighing and measuring devices as recommended by the National Bureau of Standards [National Institute of Standards and Technology (NIST) Handbook 44] shall govern truck scales used in the State of Mississippi, except weighing devices with a capacity of ten thousand (10,000) pounds or more used to weigh road construction materials (i.e. sand, gravel, asphalt, fill dirt, topsoil and concrete) shall have a tolerance of one-half of one percent (1/2 of 1%) in lieu of the requirements of Handbook 44 and shall be regulated by the Mississippi Department of Transportation.

Scales shall be checked and certified by a scale company certified in heavy truck weights by the Mississippi Department of Agriculture and Commerce. In the case of scales used for measurement of materials on Department of Transportation projects, certification shall be performed in the presence of an authorized representative of the Department or a copy of the certification may be furnished for scales that have been checked and certified within the last six months for use on other Department of Transportation projects and are still in the position where previously tested. Scales that have not been checked and certified under NIST Handbook 44 guidelines, except for the herein modified tolerances allowed, shall be so checked and certified prior to use for measurement of materials on Department of Transportation projects. Tests shall be continued on six month intervals with the test conducted in the presence of an authorized representative of the Department.

Truck scales shall be accurate to one-half of one percent of the applied load, shall be sensitive to 20 pounds, and shall have a graduation of not more than 20 pounds.

The Contractor may use an electronic weighing system approved by the Engineer in lieu of truck scales. The system shall be equipped with an automatic print out system which will print a ticket for each load with the following information:

> MDOT, Contractor's name, project number, county, ticket number, load number, pay item number, item description of the material delivered, date, time of day, haul vehicle number, gross weight, tare weight, net weight and total daily net weight.

When approved by the Engineer and materials are measured directly from a storage bin equipped with load cells, exceptions may be made to the gross and tare weight requirements.

The ticket shall also have a place for recording the temperature of asphalt mixtures, if applicable, and the signatures of MDOT's plant and roadway inspectors. The load numbers for each project shall begin with load number one (1) for the first load of the day and shall be numbered consecutively without a break until the last load of the day. The Contractor shall provide MDOT with an original and one copy of each ticket. When the ticket information provided by the Contractor proves to be unsatisfactory, MDOT will use imprinter(s) and imprinter tickets to

record load information. All recorded weights shall be in pounds and shall be accurate to within one-half of one percent of the true weight, and the system shall be sensitive to 20 pounds. The Engineer will require random loads to be checked on certified platform scales at no cost to the Department.

When an electronic weighing system utilizes the plant scales of a batch plant, the system may be used only in conjunction with a fully automatic batching and control system.

907-401.03.2.2--Additional Requirements for Batching Plants.

907-401.03.2.2.1--Plant Scales. The plant batch scale weight shall not exceed the platform scale weight by more than one percent (1.0%).

907-401.03.2.3--Additional Requirements for Drum Mixing Plants.

907-401.03.2.3.1--Plant Controls. The plant shall be operated with all the automatic controls as designed and provided by the plant manufacturer. If the automatic controls malfunction, brief periods of manual operations to complete the day's work or to protect the work already placed may be conducted with the approval of the Engineer. During manual operation, the Contractor must continue to produce a uniform mixture meeting all contract requirements.

907-401.03.2.3.2--Aggregate Handling and Proportioning. A screening unit shall be placed between the bins and the mixer to remove oversized aggregate, roots, clayballs, etc.

907-401.03.2.4--Surge or Storage Bins. Surge and/or storage systems may be used at the option of the Contractor provided each system is approved by the Department prior to use. Surge bins shall be emptied at the end of each day's operation. Storage silos may be used to store mixtures as follows:

19-mm & 25-mm mixtures ..... 24 hours
9.5-mm & 12.5-mm mixtures ..... 36 hours

The storage silos must be well sealed, completely heated and very well insulated. The mixture when removed from the storage silo shall be tested to ensure that it meets all the same specifications and requirements as the mixture delivered directly to the paving site. See Subsection 907-401.02.5.3, subparagraph (i) for sampling and testing requirements.

907-401.03.3--Hauling Equipment. The inside surfaces of each vehicle bed shall be coated with a light application of water and thin oil, soap solution, lime water solution or other approved material to prevent the mixture from sticking. Diesel fuel or gasoline shall not be used to lubricate vehicle beds. Truck beds shall be raised to drain excessive lubricants before placing mixture in the bed. An excess of lubricant will not be permitted.

907-401.03.4--Bituminous Pavers. The screed or strikeoff assembly shall be capable of vibrating and heating the full width of the mixture being placed and shall lay the lift with an automatic control device to the specified slope and grade without tearing, pulling or gouging the

mixture surface.

907-401.03.5--Rollers. All rollers shall be self-propelled units capable of maintaining a smooth and uniform forward and reverse speed as required for proper compaction. They shall be equipped with adjustable scrapers, water tanks, mats and a device for wetting the wheels or tires to prevent the mixture from sticking. Adhesion of the mixture to the rollers will not be permitted. The use of diesel fuel or gasoline for cleaning roller wheels or tires or to aid in preventing the mixture from sticking to the wheels or tires is prohibited.

All rollers shall be in good mechanical condition, free from leaking fuels and lubricants, loose link motion, faulty steering mechanism, worn king bolts and bearings. They shall be operational at slow speeds to avoid displacement of the mixture and capable of reversing direction smoothly and without backlash.

907-401.03.6--Preparation of Grade. The foundation upon which asphalt pavement is to be placed shall be prepared in accordance with the applicable Section of the Standard Specification.

Unless otherwise directed, tack coat shall be applied to the underlying surface on which the mixture is to be placed. Emulsions, if used, must be allowed to "break" prior to placement of the bituminous mixture.

Bituminous mixture shall not be placed against the edge of pavements, curbs, gutters, manholes and other structures until sprayed with a thin uniform tack coating. The tack coat shall be protected until the mixture has been placed.

Existing asphalt pavements that require preliminary leveling or patching in advance of placing the bituminous mixture shall be sprayed with a tack coat material and then brought as nearly as practicable to uniform grade and cross section. The material shall be placed by hand or machine in one or more compacted layers approximately two (2) inches or less in compacted thickness.

907-401.03.7--Blank.

907-401.03.8--Preparation of Mixture.

907-401.03.8.1--Preparation of Mixture For HMA. The temperature of the mixture, when discharged from the mixer, shall not exceed 340°F.

907-401.03.8.2--Preparation of Mixture For WMA. Warm mix asphalt is defined as a plant produced asphalt mixture that can be produced and constructed at lower temperatures than typical hot mix asphalt. Typical temperature ranges of non-polymer modified, WMA produced by foaming the asphalt binder at the plant are typically 270ºF to 295ºF at the point of discharge of the plant. Typical temperature ranges of polymer modified, WMA produced by foaming the asphalt binder at the plant are typically 280ºF to 305ºF at the point of discharge of the plant. WMA produced by addition of a terminal blended additive may allow the producer to reduce the temperatures below 270ºF as long as all mixture quality and field density requirements are met. Production temperatures at the plant may need to be increased or decreased due to factors such as

material characteristics, environmental conditions, and haul time to achieve mixture temperatures at the time of compaction in which uniform mat density can be achieved.

907-401.03.9--Material Transfer Equipment. Excluding the areas mentioned below, the material transferred from the hauling unit when placing the top lift, or the top two (2) lifts of a multi-lift asphalt pavement with density requirements, shall be remixed prior to being placed in the paver hopper or insert by using an approved Materials Transfer Device. Information on approved devices can be obtained from the State Construction Engineer. Areas excluded from this requirement include: leveling courses, temporary work of short duration, detours, bridge replacement projects having less than 1,000 feet of pavement on each side of the structure, acceleration and deceleration lanes less than 1,000 feet in length, tapered sections, transition sections for width, shoulders less than 10 feet in width, crossovers, ramps, side street returns and other areas designated by the Engineer.

907-401.03.10--Spreading and Finishing. Grade control for asphalt pavements shall be established by stringline at least 500 feet ahead of spreading, unless placement is adjacent to curb and gutter, concrete pavement, or other allowed grade control.

The mixture shall be spread to the depth and width that will provide the specified compacted thickness, line, grade and cross section. Placing of the mixture shall be as continuous as possible. On areas where mechanical spreading and finishing is impracticable, the mixture may be spread, raked and luted by hand tools.

Immediately after screeding and prior to compaction, the surface shall be checked by the Contractor and irregularities adjusted. When the edge is feathered as in a wedge lift, it may be sealed by rolling. Irregularities in alignment and grade along the edges shall be corrected before the edges are rolled.

Hauling, spreading and finishing equipment shall be furnished that is capable of and operated in such a manner that the rolling operation will satisfactorily correct any surface blemishes.

The longitudinal joint in the subsequent lift shall offset that in the underlying lift by approximately six (6) inches. However, the joint in the top lift shall be at the centerline or lane line.

907-401.03.11--Compaction. After the mixture has been spread and surface irregularities corrected, it shall be thoroughly and uniformly compacted to the required line, grade, cross section and density.

907-401.03.12--Joints. Joints between previously placed pavement and pavement being placed shall be so formed as to insure thorough and continuous bond.

Transverse construction joints shall be formed by cutting the previously placed mixture to expose the full depth of the lift.

The contact surface of transverse joints and longitudinal joints, except hot joints, shall be sprayed

with a thin uniform tack coating before additional mixture is placed against the previously placed material.

Longitudinal joints shall be formed by overlapping the screed on the previously placed material for a width of at least one (1) inch and depositing the quantity of mixture to form a smooth, tight joint.

Joint Sealant. When a pay item for 907-403-S, Joint Sealant, is included in the contract, the contact surface of transverse joints and longitudinal joints in the surface lift, except hot joints, shall be sealed by spraying a thin, uniform coat of Pavon™, Crafco™ Pavement Joint Adhesive No. 34524, Dura-Fill Cold Joint Adhesive, or approved equal, prior to placement of additional asphalt against the previously placed material. Manufacture's recommendations shall be followed if the material needs to be re-heated, and when placing the thin, uniform coat.

Prior to application of the sealant, the face of the joint shall be thoroughly dry and free from dust or any other material that would prevent proper sealing. All joints shall be swept or blown free of loose material, dirt, vegetation, and other debris by means of compressed air or a power sweeper.

Truck and vehicle traffic shall not drive across a sealed joint until it has dried sufficient to prevent damage from tracking.

The Contractor shall furnish the Engineer three copies of the manufacturer's certification stating that the material used meets the requirement of the specifications.

907-401.03.13--Pavement Samples. The Contractor shall cut samples from each lift of asphalt at the time and locations designated by the Engineer. The samples shall be taken for the full depth of each lift and shall be of a size approved by the Engineer but not to exceed 120 square inches. Tools used for cutting or coring of samples shall be of the revolving blade type such as saw or core drill. Cores shall be taken using a 4.0 to 6.0-inch inside diameter coring bit. The sample hole shall be filled, compacted and finished by the Contractor to conform with the surrounding area. No additional compensation will be allowed for furnishing samples and repairing the areas with new pavement.

907-401.03.14--Shoulder Wedge. The Contractor shall attach a device to the screed of the paver that confines the material at the end gate and extrudes the asphalt material in such a way that results in a compacted wedge shape pavement edge of approximately 30 degrees, but not steeper than 35 degrees. The device shall maintain contact between itself and the road shoulder surface and allow for automatic transition to cross roads, driveways, and obstructions. The device shall be used to constrain the asphalt head reducing the area by 10% to 15% increasing the density of the extruded profile. Conventional single plate strike off shall not be used.

The device shall be TransTech Shoulder Wedge Maker, the Advant-Edge, or a similar approved equal device that produces the same wedge consolidation results. Contact information for these wedge shape compaction devices is the following.

1. TransTech Systems, Inc.
   1594 State Street
   Schenectady, NY 12304
   800-724-6306
   www.transtechsys.com

2. Advant-Edge Paving Equipment, LLC
   P.O. Box 9163
   Niskayuna, NY 12309-0163
   518-280-6090
   Contact; Gary D. Antonelli
   Cell: 518-368-5699
   email: garya@nycap.rr.com
   Website: www.advantedgepaving.com

Before using a similar device, the Contractor shall provide proof that the device has been used on previous projects with acceptable results, or construct a test section prior to the beginning of work and demonstrate wedge compaction to the satisfaction of the Engineer. Short sections of handwork will be allowed when necessary for transitions and turnouts, or otherwise authorized by the Engineer.

MISSISSIPPI DEPARTMENT OF TRANSPORTATION

SPECIAL PROVISION NO. 907-403-14 **CODE: (SP)**

DATE: **12/02/2014**

SUBJECT: **Asphalt Pavements**

Section 403, Asphalt Pavements, of the 2004 Edition of the Mississippi Standard Specifications for Road and Bridge Construction is deleted and replaced as follows.

SECTION 907-403 - ASPHALT PAVEMENTS

907-403.01--Description. This work consists of constructing one or more lifts of asphalt pavement meeting the requirements of Section 907-401 on a prepared surface in accordance with the requirements of this section and in reasonably close conformity with the lines, grades, thicknesses, and typical cross sections shown on the plans or established by the Engineer. This work shall also include applicable in-grade preparation of the underlying course in accordance with Section 321.

The Contractor must select one of the asphalt mixture processes (HMA or WMA) to be used on this project.

907-403.02--Material Requirements. Materials and their use shall conform to the applicable requirements of Subsection 907-401.02.

907-403.03--Construction Requirements.

907-403.03.1--General. Construction requirements shall be as specified in Subsection 907-401.03, except as otherwise indicated in this section or applicable special provisions.

907-403.03.2--Smoothness Tolerances. Except as noted herein, the finished smoothness of each lift shall conform to the designated grade and cross section within the following tolerances from grade stakes or other grade reference points set at 25-foot intervals:

	Lower* & Leveling Lifts	Lower* Intermediate Lift	Top Intermediate Lift	Surface Lift
Maximum deviation from grade and cross section at any point	1/2"	3/8"	1/4"	1/4"
Maximum deviation from A 10 foot straight edge.....	3/8"	1/4"	1/8"	1/8"

Note: Where more than four (4) lifts of asphalt are required, all lifts, excluding the top three (3) lifts, shall meet the requirements of the lower lift.

* When tested longitudinally from a stringline located equidistant above points 50 feet apart, the distance from the stringline to the surface at any two points located 12½ feet apart shall not vary one from the other more than the maximum deviation allowed above from a 10-foot straight edge.

Grade stakes or other grade reference points set at 25-foot intervals and maximum deviation from grade and cross section will not be required provided an approved profile averaging device is furnished and properly used for the four conditions set forth herein; however, all other surface requirements are applicable.

(a) Overlays with one overall lift.

(b) Overlays with two or more overall lifts -- for each lift above the first overall lift provided each underlying overall lift is within the allowable tolerances.

(c) Surface lift of new construction provided the underlying lift is within the allowable tolerances.

(d) Full-depth asphalt construction for lifts above the lower lift provided the lower lift is within the specified tolerances for the lower intermediate lift.

In the placement of full depth asphalt pavement, where the chemically treated base is constructed, graded and/or trimmed, full lane width, to a surface tolerance of ±3/8 inches from design grade, stringline grade controls may be eliminated for the placement of the asphalt drainage course and all asphalt lifts. In addition, where the base course is crushed stone or crushed concrete and is constructed to a surface tolerance of ±3/8 inches from design grade using a stringline controlled spreader, stringline grade controls may be eliminated for the placement of the asphalt drainage course and all asphalt lifts.

All other tolerances as specified in Section 321 are applicable, except for bases, when tested longitudinally, the maximum deviation when measured at the 12½-foot midpoint shall be ±3/8 inches.

Acceptance and payment of asphalt will be determined on a lot to lot basis by cores taken from the completed pavement as outlined in Subsection 907-403.03.3.

Approved contacting type profile averaging devices are those devices capable of working in conjunction with a taut string or wire set to grade, or ski-type device with extreme contact points with the surface at least 30 feet apart. Approved non-contacting type profile averaging devices are laser type ski devices with at least four referencing mobile stations at a minimum length of 24 feet, or an approved equal.

When approved by the Engineer, a short ski or shoe may be substituted for a long ski on the

second paving operation working in tandem.

During the finishing and compacting of pavement lifts, it shall be the responsibility of the Contractor to check the surface and joints for progress toward conformance to surface requirements set forth herein. Variations from surface requirements exceeding the allowable tolerances shall be corrected at the Contractor's expense.

When a portland cement concrete pavement is to be placed on an asphalt lift, the finished top of the asphalt lift shall meet the requirements of Sections 32l and 50l.

Sections(s) or portions thereof representing areas excluded from a smoothness test with the High Speed Inertial Profiling System (IPS) shall also be excluded from consideration for a contract price adjustment for rideability.

Any contract price adjustment for rideability will be applied on a continuous basis to the pay tonnage, determined in accordance with Subsections 907-401.02.6.8 and 907-403.04, for the section(s) or portions thereof for which an adjustment is warranted.

Contract price adjustments for rideability shall only be applicable to the surface lift and furthermore to only the long continuous section(s) or portions of the long continuous section(s) of the surface lift that require smoothness be determined by using a profiling device.

907-403.03.2.1--Smoothness Tolerances for Mean Roughness Index (MRI). Smoothness tolerances shall be applied to asphalt pavements based on the following pavement categories.

Category A applies to the following pavement constructions:

- New construction
- Construction with three (3) or more lifts
- Mill and two (2) or more lifts

Category B applies to the following pavement constructions:

- Mill and one (1) lift
- Two (2) lift overlays without milling

Category C applies to the following pavement constructions:

- Single lift overlay without milling
- All 57,650-pound routes regardless of the pavement construction

Additional projects may qualify for Category C construction at the department's discretion. Spot Leveling does not count as a lift. Full width / continuous leveling courses that have a minimum thickness of ¾" across the entire lane width will be considered a lift.

Category A projects shall have a long continuous interval (528-foot) surface MRI of not more than 60 inches per mile.

Category B projects shall have a long continuous interval (528-foot) surface MRI of not more than 70 inches per mile.

Category C projects shall have the existing surface profiled at no additional cost to the State. These projects shall be measured by a long fixed interval (528-foot) surface MRI and meet the higher value of the following requirements:

A 50% improvement in MRI from the existing surface
OR
80 inches per mile

In the case that 50% of the existing surface MRI is greater than 80 inches per mile, the short continuous threshold shall be increased from 160 inches per mile by the difference between 50% of the existing surface MRI and 80 inches per mile.

For all projects, areas of the surface lift with localized roughness greater than 160 inches per mile as determined by the continuous short interval (25') report will be identified for correction by the Project Engineer.

When a project has multiple lifts, the lift underlying the surface lift shall have a MRI of no more than 10 inches/mile more than the surface lift threshold for both long and short continuous intervals. Category B projects containing multiple lifts must meet the Category C percent improvement requirement for the underlying lift. Corrective action must be taken on those segments that do not meet this requirement. No unit price adjustment will be applied on any underlying lift.

For Category A and B projects, a unit price increase will be added when the MRI for the final surface lift, prior to any required localized roughness (short interval) corrective action, is less than or equal to fifty inches per mile (50.0 inches / mile) on the long interval report. These Projects will be considered for incentive pay based on the following guidelines for the long interval surface lift MRI.

Mean Roughness Index inches / mile	Contract Price Adjustment Percent of Asphalt Unit Bid Price
Less than 35.0	108
35.1 to 40.0	106
40.1 to 45.0	104
45.1 to 50.0	102
50.1 to Required Surface MRI	100

In addition to the above pay incentive factors, a project may be subject to a disincentive when the Long Continuous Interval MRI for the surface exceeds the allowable tolerance.

Mean Roughness Index (inches / mile)	Contract Price Adjustment Percent of Asphalt Unit Bid Price
Above 20.0 Over	REMOVE AND REPLACE
15.1 to 20.0 Over	80
10.1 to 15.0 Over	85
5.1 to 10.0 Over	90
0.1 to 5.0 Over	95
Required Surface MRI	100

For Category C projects, segments may be subject to a disincentive when the Fixed Interval MRI for the surface does not meet the minimum requirements.

Percent Improvement MRI (inches/mile)	Contract Price Adjustment Percent of Asphalt Unit Bid Price
Below 30 Percent	REMOVE AND REPLACE
30.1 to 35.0 Percent	80
35.1 to 40.0 Percent	85
40.1 to 45.0 Percent	90
45.1 to 50.0 Percent	95
Above 50%	100

Segment(s) or portions thereof representing areas excluded from a smoothness test shall also be excluded from consideration for a contract price adjustment for rideability. Where a segment less than 528 feet occurs at the end of a section, it will be combined with the preceding 528-foot segment for calculation of MRI. Corrective action must be taken on those sections that exceed the 'Remove and Replace' threshold as directed by the Project Engineer. The minimum remove and replace length will be 528 feet (0.1 mile). Additional smoothness testing shall be required on sections following replacement and will be required to meet *at least* the maximum surface MRI short of 'Remove and Replace' tolerance.

The above pay factors will be applied in conjunction with the Long Continuous Histogram Chart from ProVAL's Smoothness Assurance Module. The price adjustments for rideability will be tabulated in MDOT's Pay Incentive spreadsheet on the basis of a theoretical tonnage of 110 lbs/yd^2 * inch thickness (pounds per square yard * inch thickness) determined in accordance with Subsections 907-401.02.6.5 and 907-403.04, for the segment(s) or portions thereof for which an adjustment is warranted.

907-403.03.3--Thickness Requirements. Asphalt overlay lifts shall be constructed as nearly in accordance with the thickness shown on the plans as the underlying pavement and foundation will permit. Periodic and cumulative yield tests will be made to determine practicable conformity to the thickness of each lift. The Engineer may order modifications in placement thicknesses to prevent unwarranted variations in plan quantities.

When the paver is operating off an established grade line, no thickness determination will be

required for the various lifts of pavement. It is understood that the tolerances from design grade will control the thickness requirements.

When grade stakes are eliminated by Notice to Bidders or as outlined in Subsection 907-403.03.2(d) and where resulting in the placement of two (2) or more lifts, acceptance and payment will be determined on a lot to lot basis by cores taken from the completed pavement. Lots will be coincidental with acceptance lots for the surface lift as provided in Subsection 907-401.02.6.4, except that only lots resulting from the placement of mainline surface lift will be used for thickness assessment. One core will be obtained at random from each lot. Irregular areas will not be cored.

When the average thickness of all the cores from the lots representing a day's production, excluding any discarded by the Engineer for justifiable reason, is within three-eighths of an inch (3/8") of the total pavement thickness shown on the plans, excluding lift(s) placed using an established grade line, corrective action will not be required and a price adjustment will not be made for non-conformity to specified thickness.

When the average thickness of all the cores from the lots representing a day's production is deficient in thickness by more than three eights of an inch (3/8") of the total pavement thickness shown on the plans, excluding lift(s) placed using an established grade line, the deficiency shall be corrected by overlaying the entire length of the day's production. The thickness of the overlay shall be equal to the thickness deficiency but no less than the minimum single lift laying thickness for the specified mixture.

When the thickness of all the cores from the lots representing a day's production is more than three eights of an inch (3/8") thicker than the total thickness shown on the plans, excluding lift(s) placed using an established grade line, a price adjustment will be made in accordance with Subsection 907-403.05.1.

The cores shall be cut and removed by the Contractor in the presence of the Engineer's representative and turned over to the Engineer's representative for further handling. The Contractor shall fill each core hole with surface lift mixture and compact to the satisfaction of the Engineer within 24 hours after coring.

907-403.03.4--Lift Corrections. Pavement exceeding the allowable surface tolerances shall be corrected at the Contractor's expense by the following methods:

Lower, Leveling and Lower Intermediate Lifts:

(a) Removal or addition of mixture by skin patching, feather edging, wedge lift construction or full depth patching where appropriate and can be completed in a satisfactory manner.

(b) Superimposing an additional layer which shall be an approved grade raise for the full roadway width and length of the area to be corrected.

Top Intermediate Lift:

(a) Removal and the addition of sufficient mixture to provide the specified thickness. Corrections by this method shall be square or rectangular in shape and shall completely cover the area to be corrected.

(b) Superimposing an additional layer of minimum lift thickness for mixture being used which shall be an approved grade raise for full roadway width of the area to be corrected. Transverse joints shall be perpendicular to the centerline of the pavement.

Surface Lift:

(a) Removal and the addition of sufficient mixture to provide new material of at least minimum single lift laying thickness for full lane width of the area to be corrected. Transverse joints shall be perpendicular to the centerline of the lane.

(b) Superimposing an additional layer (minimum lift thickness for mixture being used) which shall be an approved grade raise for full roadway width of the area to be corrected. Transverse joints shall be perpendicular to the centerline of the pavement.

All mixtures used in the correction of unacceptable pavement shall be approved by the Engineer prior to use.

907-403.03.5--Overlays or Widening and Overlays. In addition to the requirements of Subsections 907-403.03.1 through 907-403.03.4, the following requirements will be applicable when an existing pavement is to be overlaid or widened and overlaid.

907-403.03.5.1--Blank.

907-403.03.5.2--Sequence of Operations. In order to expedite the safe movement of traffic and to protect each phase of the work as it is performed, a firm sequence of operations is essential. Unless otherwise provided in the traffic control plan and/or the contract, the following appropriate items of work shall be begun and continually prosecuted in the order listed:

(a) In sections designated by the Engineer, trim the shoulders along the pavement edges to provide drainage from the pavement.

(b) Perform pre-rolling to locate areas of pavement with excessive movement per Section 511.

(c) Perform selective undercutting and patching as directed per Subsection 907-403.03.5.4.

(d) Perform pressure grouting as specified in Section 512.

(e) Clean and seal joints per Section 413.

(f) Complete preparation on one side of roadway to be widened and place widening

materials.

(g) Reconstruct shoulders to elevation necessary to assure traffic safety.

(h) Open the widened section to traffic.

(i) Complete above work for other side of roadway.

(j) Perform preliminary leveling as directed.

(k) Apply interlayer as specified.

(l) Place the first overall leveling lift.

(m) After the first overall leveling lift, reconstruct shoulders as necessary to eliminate vertical differentials which may be hazardous to traffic.

(n) Place first intermediate lift.

(o) Construct shoulders to the contiguous elevation of the first intermediate lift.

(p) Place remaining intermediate lift, if required.

(q) Place surface lift.

(r) Complete construction of shoulders.

(s) Apply permanent traffic marking.

(t) Final cleanup.

The above operations shall be performed in such a manner that traffic will be maintained on a paved surface at all times. Two-lane, two-way highways should not be restricted to a single lane in excess of a 3,000-foot section.

907-403.03.5.3--Widening of Pavement. The foundation for widening shall be formed by trenching or excavating to the required depth and constructing a smooth, firm and compacted foundation. It shall have sufficient density and stability to withstand the placement and compaction of subsequent lifts. Soft, yielding and other unsuitable material which the Engineer determines will not compact readily shall be removed and backfilled with granular material or asphalt as directed.

Except as provided herein, excavation for widening, undercutting or other required excavation shall be spread along the edge of the shoulders, foreslopes or other adjacent areas as directed and will be an absorbed item. When the quantity is in excess of what may be used satisfactorily on adjacent areas, the Engineer may direct that the material be loaded, hauled and spread uniformly

on other designated areas. In this case, compensation for handling surplus material will be in accordance with the appropriate pay items as provided in the contract or as extra work.

If the plans require widening of the shoulders or embankment with Contractor furnished material, all suitable material obtained from widening excavation may be used and will be measured and paid for as Contractor furnished materials. No measurement for payment of haul will be made.

Removal and disposal of old stakes, forms and other debris encountered in excavating shall be in accordance with Section 201 and shall be considered as incidental to and included in the unit prices bid for other items. No separate measurement will be made therefor. Pavement edges and surfaces shall be cleaned prior to final shaping and compaction of adjacent trenching or undercut areas.

Granular material for widening shall be placed on a previously prepared, smooth, firm and unyielding foundation in accordance with the typical section. Density of the granular material shall be as specified.

Asphalt for widening, including trench widening, shall meet the applicable requirements of Section 907-401, Section 907-403, and shall be placed in one or more layers as shown on the plans or directed. The surface of the mixture shall be finished as a continuation of the adjacent pavement slope.

Trench rollers or other compaction equipment shall be used to compact the foundation, granular material and bituminous mixtures for widening when standard width rolling equipment cannot be used.

907-403.03.5.4--Patching. Existing pavement which has failed or unsatisfactorily stabilized shall be removed as directed. Removal of pavement will be measured and paid for under the appropriate pay items as provided in the contract.

Backfill shall consist of asphalt or a combination of compacted layers of aggregate material and asphalt. Unless otherwise specified, the Engineer will make this determination based on depth and field conditions.

Asphalt used for backfilling will be measured and paid for at the contract unit price for the mixture designated on the plans as the lowest lift. Aggregate will be measured and paid for under the appropriate pay item as provided in the contract or as extra work.

907-403.03.5.5--Preliminary Leveling. All irregularities of the existing pavement, such as ruts, cross-slope deficiencies, etc., shall be corrected by spot leveling, skin patching, feather edging or a wedge lift in advance of placing the first overall lift.

907-403.03.5.6--Placement of Lifts. The leveling lift shall be placed in a layer, or layers, not exceeding approximately two and one-half inches compacted thickness.

When single lane construction is required, placement of a lift on the adjacent lane may be performed by an approved profile averaging device provided the lane previously placed is within the allowable tolerances for all surface requirements. When any of the tolerances are exceeded, the Contractor shall reestablish the control stringline for laying the adjacent lane should the Contractor elect to perform this work prior to correcting the deficiencies of the lane previously placed. In no case shall a "matching shoe" be used to control the grade of an adjacent lane.

In instances where there are only minor deviations from the allowable tolerances in the first overall lift, the Engineer may permit the Contractor to place the next higher lift by graded stringline in lieu of making the corrections.

Single lane placement of leveling, intermediate and surface lifts shall be limited to the distance covered in one and one-half days in advance of that placed in the adjacent lane.

907-403.03.5.7--Protection of Pavement. The pavement shall be protected and properly maintained until it has been compacted and cooled sufficiently for use by traffic.

907-403.04--Method of Measurement. Asphalt pavement, of the type specified, will be measured by the ton. The weight of the composite mixture shall be determined in accordance with the provisions of Subsection 907-401.03.2.1.11.

The pay quantities for each individual job mix formula (JMF) will be calculated using the approved JMF maximum specific gravity (Gmm) and the following formulas.

When the composite mixture has a maximum specific gravity of 2.540 or less,

$$Tp = Tw$$

When the composite mixture has a maximum specific gravity greater than 2.540,

$$Tp = Tw((100-(((Gmm*A*B)-C)/(Gmm*A*B))*100))/100$$

Where:

Tp	=	Total tonnage for payment
Tw	=	Total tonnage weighed, used and accepted
Gmm	=	Maximum Specific Gravity of the approved composite asphalt mixture
A	=	46.725 lbs/yd^2/in
B	=	0.93 = 93% density
C	=	110.374 lbs/yd^2/in = Theoretical density at 2.540 Gmm

Unless shown as a separate pay item, the furnishing and application of the tack coat will not be measured for payment. When payment is provided, tack coat will be measured as set out in Section 407.

Joint sealant will be measured by the linear foot for each joint sealed.

The quantity of bituminous mixture required to correct the work, when made at the expense of the Contractor, will not be measured for payment.

Any trenching required for widening will not be measured for payment, such cost thereof shall be included in other items of work.

Undercut required by the Engineer will be measured for payment under the appropriate excavation item as provided in the contract or as extra work. Pavement removal and any required trenching will not be included in the measurement for undercut.

Class "B" structural concrete base substituted for asphalt under portland cement concrete bridge end pavement, as per Subsection 502.03.1, will be paid for as asphalt calculated as follows:

Square yards of portland cement concrete bridge end pavement x concrete base thickness in inches x 0.055 = tons of asphalt.

907-403.05--Basis of Payment. Subject to the adjustments set out in Subsections 907-401.02.6.3, 907-401.02.6.4, 907-401.02.6.5 & 907-403.03.2, asphalt pavement, measured as prescribed above, will be paid for at the contract unit price per ton for each lift of pavement specified in the bid schedule and shall be full compensation for completing the work.

Joint sealant will be paid for at the contract unit price per linear foot for each joint which shall be full compensation for furnishing the joint sealant material, cleaning the joint, applying the sealant, and for all equipment, tools, labor, and incidentals necessary to complete the work.

907-403.05.1--Price Adjustment for Thickness Requirement. When grade stakes are eliminated as provided in Subsection 907-403.03.3 and the average thickness of all cores from lots representing a day's production is more than three eights of an inch (3/8") thicker than the total specified thickness of the pavement, excluding lift(s) placed using an established grade line, a lump sum reduction in payment for the surface lift of lots representing a day's production will be made as follows:

$$\text{Individual Day's L.S. Reduction} = \left(\text{Monetary Value of the Day's Surface Lift Production}\right) \times \frac{(D - 3/8)}{ST}$$

Where:

D = The day's average deviation from total pavement thickness shown on the plans, excluding lift(s) placed using an established grade line.

ST = Specified thickness for surface lift.

The total L.S. reduction for the project is the summation of the individual day's reductions in payment.

907-403.05.2--Pay Items.

Payment will be made under:

907-403-A: (1) , (4) , Asphalt Pavement - per ton

907-403-B: (2) , (4) , Asphalt Pavement, Leveling - per ton

907-403-C: (3) , (4) , Asphalt Pavement, Trench Widening - per ton

907-403-D: (2) , HT, Asphalt Pavement, Polymer Modified - per ton

907-403-E: (2) , HT, Asphalt Pavement, Polymer Modified, Leveling - per ton

907-403-S: Joint Sealant - per linear foot or mile

(1) 4.75-mm mixture, 9.5-mm mixture, 12.5-mm mixture, 19-mm mixture, or 25-mm mixture
(2) 4.75-mm mixture, 9.5-mm mixture, 12.5-mm mixture, or 19-mm mixture
(3) 19-mm mixture or 25-mm mixture
(4) ST, MT or HT

MISSISSIPPI DEPARTMENT OF TRANSPORTATION

SPECIAL PROVISION NO. 907-406-4 **CODE: (SP)**

DATE: **10/13/2015**

SUBJECT: **Cold Milling**

Section 406, Cold Milling, of the 2004 Edition of the Mississippi Standard Specifications for Road and Bridge Construction is hereby amended as follows.

907-406.01--Description. After the first paragraph of Subsection 406.01 on page 279, add the following.

This work also consists of the removal of portions of existing pavement using a cold fine milling process to a nominal depth using grade control as specified on the Plans or as directed by the Engineer. It shall also include the loading, hauling, and disposal of the milled materials by the Contractor in accordance with the plans and specifications. The planed surface shall provide a textured surface suitable for repairs, paving, or as a temporary riding surface, whichever is specified.

907-406.03--Construction Requirements.

907-406.03.1--Equipment. Delete the third sentence of the first paragraph of Subsection 406.03.1 on page 279, and substitute the following.

The equipment shall accurately and automatically establishing profile grades along each edge of the machine by referencing from the existing pavement with means of an approved profile averaging device with extreme contact points with surface at least 30 feet apart, or from an independent grade line and shall have an automatic system for controlling cross slope.

After the second paragraph of Subsection 406.03.1 on page 279, add the following.

When fine milling is required, the milling machine shall, in addition to the above, be designed specifically for grinding surfaces to close tolerances and shall be operated at a rate recommended by the manufacturer so as to avoid tearing and gouging of the pavement surface. The fine milling machine shall be equipped with a fine milling drum of the size and shape necessary to produce an ultrafine texture to the milled surface and meet the requirements of this specification. The bit or teeth spacing on the drum shall have a maximum spacing of six millimeter (6 mm). The equipment shall have a positive means for limiting any dust resulting from the operation from escaping into the air.

After Subsection 406.03.2 on page 280, add the following.

907-406.03.3--Fine Milling. Unless otherwise noted or advised by the Engineer, the fine milling operation shall be conducted using an automatic grade control device, as referenced in Subsection

406.03.1, to establish accurate grade control and cross slope. The milled surface shall be textured, substantially free from waves or irregularities.

Prior to beginning a fine milling operation, the Engineer may require the Contractor to construct a 500-foot test section. The texture and consistency of profile and cross slope of this test section will be evaluated by the Engineer to verify the above straight-edge requirement can be met.

If the tolerance is exceeded in the test section, the Contractor shall cease work and take corrective actions to improve the process. Once corrective actions are taken, the Contractor will construct another test section. This designated section shall be fine milled to conform to the same requirements as those required in the initial test section. The Contractor shall not be allowed to start continuous fine milling until an acceptable test section is obtained.

Fine milling shall produce a uniform finished surface and maintain a constant cross slope between extremities in each lane.

The surface tolerance of the fine milling shall be checked to assure a uniform pavement texture that is true to line, grade, and cross section.

Fine milled pavement surfaces are subject to visual and straightedge inspections by the Engineer at any time during the milling operation. The final fine milled surface shall be a uniform finish on the grade and slope shown to be required on the plans. The finished surface shall also not vary more than ¼" from a 10-foot straightedge placed anywhere on the surface of the milled area.

The cross slope shall be checked to assure uniformity and that no depressions or slope misalignments exist when the slope is tested with a straightedge placed perpendicular to the center line.

Dust, residue, and loose milled material shall be removed from the fine milled surface. Traffic shall not be allowed on the milled surface nor any asphalt placed on the milled surface until removal is complete.

907-406.04--Method of Measurement. Delete the paragraph in Subsection 406.04 on page 280, and substitute the following.

Cold milling of pavement and shoulders, all depths, will be measured by the square yard, cubic yard (LVM), or ton as indicated in the contract. Loading, hauling, and disposal will not be measured for separate payment.

Fine milling of the specified pavement will be measured by the square yard, cubic yard (LVM), or ton as indicated in the contract. Loading, hauling, and disposal will not be measured for separate payment.

Fine milling to repair failed areas in Open Graded Friction Courses will not be measured for payment unless authorized by the Engineer.

907-406.05--Basis of Payment. Delete the first and second paragraphs of Subsection 406.05 on page 280, and substitute the following.

Cold milling of pavement and shoulders, all depths, measured as prescribed above, will be paid for at the contract unit price per square yard, cubic yard (LVM) or ton, as indicated, which price shall be full compensation for completing the work.

Fine milling, measured as prescribed above, will be paid for at the contract unit price per square yard, cubic yard (LVM) or ton, as indicated, which price shall be full compensation for completing the work.

When not shown as a separate pay item in the contract, the price for each item of milling shall include the cost of continuous maintenance of traffic and protective services as required by the Department's Traffic Control Plan, including all required individual traffic control devices.

Delete the pay items listed on page 280 and substitute the following.

907-406-A:	Cold Milling of Bituminous Pavement, All Depths	- per square yard, cubic yard or ton
907-406-B:	Cold Milling of Concrete Pavement, All Depths	- per square yard, cubic yard or ton
907-406-C:	Cold Milling of Shoulders, All Types, All Depths	- per square yard, cubic yard or ton
907-406-D:	Fine Milling of Bituminous Pavement, All Depths	- per square yard, cubic yard or ton
907-406-E:	Fine Milling of Concrete Pavement, All Depths	- per square yard, cubic yard or ton
907-406-F:	Fine Milling of Shoulders, All Depths	- per square yard, cubic yard or ton

MISSISSIPPI DEPARTMENT OF TRANSPORTATION

SPECIAL PROVISION NO. 907-407-2 **CODE: (SP)**

DATE: 07/22/2014

SUBJECT: Tack Coat

Section 407, Tack Coat, of the 2004 Edition of the Mississippi Standard Specifications for Road and Bridge Construction is hereby amended as follows:

907-407.02.1--Bituminous Material. Delete the second sentence of the first paragraph of Subsection 407.02.1 on page 281, and substitute the following:

When not specified, the materials shall be as specified in Table 410-A on page 293.

907-407.03.3--Application of Bituminous Material. Delete the first paragraph of Subsection 407.03.3 on page 281, and substitute the following.

Tack coat shall be applied with a distributor spray bar. A hand wand will only be allowed for applying tack coat on ramp pads, irregular shoulder areas, median crossovers, turnouts, or other irregular areas. Bituminous materials and application rates for tack coat shall be as specified in Table 410-A on page 293. Tack coat shall not be applied during wet or cold weather, or to a wet surface. Emulsions shall be allowed to "break" prior to superimposed construction.

907-407.05--Basis of Payment. Delete the pay item at the end of Subsection 407.05 on page 282, and substitute the following:

907-407-A: Asphalt for Tack Coat * - per gallon

* Grade may be specified

MISSISSIPPI DEPARTMENT OF TRANSPORTATION

SPECIAL PROVISION NO. 907-501-6 **CODE: (SP)**

DATE: 08/13/2013

SUBJECT: Portland Cement Concrete Pavement

Section 907-501, Portland Cement Concrete Pavement, of the 2004 Standard Specifications for Road and Bridge Construction is hereby amended as follows.

907-501.03--Construction Requirements.

907-501.03.6.1--Concrete Saw. Delete the sentence in Subsection 501.03.6.1 on page 304, and substitute the following.

When sawing joints is elected or specified, the Contractor shall provide sawing equipment adequate in number of units and power to complete the sawing to the required dimensions using an "early entry" dry cut saw approved by the Engineer.

907-501.03.14--Test Specimens. Delete the second sentence of Subsection 501.03.14 on page 310, and substitute the following.

The specimens shall be made and cured as specified in Subsection 907-804.02.13.1.1 thru Subsection 907-804.02.13.1.5 at the frequency in TMD 20-04-00-000. Testing personnel shall meet the requirements in Subsection 907-804.02.9. Laboratory and test equipment shall meet the requirements in Subsection 907-804.02.8.

Delete Subsection 501.03.19 on pages 318 & 319, and substitute the following.

907-503.19--Surface Test. It is the intent of these specifications that the finished surface will have good riding qualities.

The smoothness of the surface will be determined by using an Inertial Profiling System (IPS) that meets the requirements of Subsection 907-401.02.6.9 to measure and record roughness data in each designated location. Roughness data for each longitudinal profile will be reported as a mean roughness index (MRI). MRI is calculated by averaging the international roughness index (IRI) values from the two wheelpath profiles. The surface shall be tested and corrected to a smoothness index as described herein with the exception of those locations or specific projects that are excluded from smoothness testing with an IPS.

The smoothness of the surface will be determined for traffic lanes, auxiliary lanes, climbing lane and two-way turn lanes. Areas excluded from a smoothness test with the IPS are acceleration and deceleration lanes, tapered sections, transition sections for width, shoulders, crossovers, ramps, side street returns, etc. The roadway pavement on bridge replacement projects having 1,000 feet or less of pavement on each side of the structure will be excluded from a smoothness test. Pavement on horizontal curves having a radius of less than 1,000 feet at the centerline and

pavement within the super elevation transition of such curves are excluded from smoothness testing. Smoothness testing shall terminate 15 feet from each transverse joint that separates the pavement from a bridge deck, bridge approach slab or existing pavement not constructed under the contract.

During initial paving operations, either when starting up or after a long shut down period, the pavement surface will be tested with profilograph as soon as the concrete has cured sufficiently to allow testing. Membrane curing damaged during the testing operation shall be repaired by the Contractor. The purpose of this testing is to aid the Contractor and the Engineer in evaluating the paving methods and equipment. Smoothness measurements must be performed at the posted speed limit or 50 miles per hour (±5 miles per hour), whichever is lower. This speed requirement will be waived for all lightweight profilers. Measurements will be made in both wheel paths of exterior and interior lanes. The wheel paths shall be designated as being located three feet (3') and nine feet (9') from centerline or longitudinal joint, respectively. Beginning and ending latitude and longitude coordinates shall be required on each smoothness test. Testing will also be required on sections that have been surface corrected. No smoothness testing shall be performed when there is moisture of any kind on the pavement surface.

The surface will be accepted on a continuous basis for pavement smoothness. Continuous reporting is based upon all MRI values for a specified running interval. These values are averaged and presented at the midpoint of the specified running interval. The last 15 feet of a day's work may not be obtainable until the work is continued and for this reason may be included in the subsequent section.

Smoothness tolerances shall be applied to concrete pavements based on the following pavement categories:

Category A applies to the following pavement constructions.

- New construction projects

Category B applies to the following pavement constructions.

- Rehabilitation projects

For all projects, the surface smoothness data shall be reported by two MRI methods.

1. A continuous 528-foot long interval MRI report
2. A continuous 25-foot short interval MRI report

Category A projects shall have a long interval surface MRI of not more than 60 inches per mile. Areas of the surface with localized roughness greater than 130 inches per mile as determined by the continuous short interval report will be identified for correction by the Project Engineer.

Category B projects shall have a long interval surface MRI of not more than 70 inches per mile. Areas of the surface with localized roughness greater than 140 inches per mile as determined by the continuous short interval report will be identified for correction by the Project Engineer.

Areas of localized roughness exceeding the continuous 25-foot interval thresholds shall be corrected regardless of the 528-foot interval MRI value of the section. Surface correction by grinding shall be performed in accordance with Subsection 501.03.19.1. The Contractor shall also make other necessary surface corrections to ensure that the final mean roughness index of the section meets the above requirements.

Corrections shall be made using an approved profiling device or by removing and replacing the pavement as directed by the Engineer. Corrective work shall be performed at no additional cost to the State.

Each area or section of pavement removed shall be at least 10 feet in length and at least the full width of the lane involved. When it is necessary to remove and replace a section of pavement, any remaining portion of the slab adjacent to the joints that is less than 10 feet in length shall also be removed and replaced. The new surface shall be textured as specified in the contract.

Where surface corrections are made, the Contractor shall reestablish the surface texture to a uniform texture equal in roughness to the surrounding uncorrected pavement. This work shall be at no additional cost to the State.

Corrective work shall be completed prior to determining pavement thickness.

After Subsection 501.03.24.2 on page 325, add the following.

907-501.03.24.3--Pavement Cracking. Concrete pavement with full-depth cracks or misplaced joints shall be removed and replaced at no additional expense to the Department. Load transfer devices shall be established in these replaced panels in a manner sufficient to meet the designed load transfer requirements of the original pavement.

Any partial depth surface cracking or other surface distress shall be immediately repaired by the Contractor at no additional expense to the Department. The Contractor shall submit to the Engineer for concurrence, a plan describing the materials and methods to be used when making these repairs. Concurrence with the plan does not relieve the Contractor from providing a satisfactory repair at the time of final inspection of the project. Should the repair fail to produce satisfactory results prior to the final inspection of the project, the Contractor shall develop and submit a new plan for repairing the cracked or distressed areas.

907-501-05--Basis of Payment.

907-501-05.1--General. Delete pay item nos. 501-A, 501-B & 501-C on page 326, and substitute the following.

907-501-A: ___" Reinforced Cement Concrete Pavement, _____ Finish - per square yard

907-501-B: ___" Plain Cement Concrete Pavement, _____ Finish - per square yard

907-501-C: ___" Continuously Reinforced Cement Concrete Pavement, _____ Finish - per square yard

907-501-05.2--Price Adjustment for Thickness. Delete the table in Subsection 501.05.2 on page 327 and substitute the following.

Thickness Deficiency Inches	Proportional Part of Contract Price Allowed
0.0, 0.1, 0.2	100 percent
0.3	80 percent
0.4	72 percent
0.5	68 percent
0.6, 0.7, 0.8	57 percent
0.9, 1.0	50 percent

Delete Subsection 501.05.3 on pages 327 & 328, and substitute the following.

907-501-05.3--Price Adjustment for Smoothness. For all concrete projects, when the MRI for the final surface is less than or equal to forty-five inches per mile (45.0 inches / mile) on the long interval report, a unit price increase will be added. The adjusted unit price will be computed using the contract unit price of the portland cement concrete pavement. This adjusted unit price will apply to the total area for the lane width represented by given segment. Projects will be considered for incentive pay based on the following guidelines for the long interval surface lift MRI.

Mean Roughness Index (inches / mile)	Contract Price Adjustment (Per Square Yard of PCC Pavement)
less than 30.0	plus 0.64 percent
30.0 to 35.0	plus 0.48 percent
35.1 to 40.0	plus 0.32 percent
40.1 to 45.0	plus 0.16 percent
45.1 to 50.0	100 percent
Over 50.0	100 percent (With Correction to Required MRI)

In addition to the above pay incentive factors, a project may be subject to a disincentive when the MRI for the final surface exceeds the allowable tolerance. This applies to all project categories and will correlate to the maximum allowed long interval MRI.

Mean Roughness Index (inches / mile)	**Adjustment Price (Per Square Yard of PCC Pavement)**
Above 20.1 Over	REMOVE AND REPLACE
15.1 to 20.0 Over	minus 3.2 percent
10.1 to 15.0 Over	minus 2.4 percent
5.1 to 10.0 Over	minus 1.6 percent
0.1 to 5.0 Over	minus 0.8 percent
Required Surface MRI	100 percent

Note: All incentives and disincentives will be based on a single smoothness test, following all required localized roughness (short interval) corrective action, of the newly paved surface.

Corrective action must be taken on those sections that exceed the 'Remove and Replace' threshold on the Long Continuous Interval as directed by the Project Engineer. Additional smoothness testing shall be required on sections following replacement and will be required to meet *at least* the maximum surface MRI short of 'Remove and Replace' tolerance.

For concrete pavement other than main-line pavement, the surface will be tested using a 10-foot straightedge at locations selected by the Engineer. The variation of the surface from the testing edge of the straightedge between any two contacts, longitudinal or transverse with the surface, shall not exceed 1/4 inch. Irregularities exceeding the specified tolerances shall be corrected, at no additional cost to the State, by the Contractor with an approved profiling device or by other means as directed by the Engineer. Following correction, the area will be retested to verify compliance with the specified tolerances.

MISSISSIPPI DEPARTMENT OF TRANSPORTATION

SPECIAL PROVISION NO. 907-601-1 **CODE: (IS)**

DATE: **08/29/2007**

SUBJECT: **Structural Concrete**

Division 600, Incidental Construction, of the 2004 Edition of the Mississippi Standard Specifications for Road and Bridge Construction is hereby amended as follows:

After the heading **DIVISION 600 - INCIDENTAL CONSTRUCTION**, add the following:

Unless otherwise specified, all testing of Portland cement concrete in Division 600 shall be in accordance with the requirements of Subsection 907-601.02.1.

907-601.02--Materials.

907-601.02.1--General. Delete the second and third sentence of the first paragraph of Subsection 601.02.1 on page 348, and substitute the following:

Sampling and testing will be in accordance with TMD-20-04-00-000 or TMD-20-05-00-000, as applicable.

907-601.03.6.3--Removal of Falsework, Forms, and Housing. Delete the first paragraph, the table and second paragraph of Subsection 601.03.6.3 on pages 349 and 350, and substitute the following:

The removal of falsework, forms, and the discontinuance of heating, shall be in accordance with the provisions and requirements of Subsection 907-804.03.15, except that the concrete shall conform to the following compressive strength requirements:

Wingwall and Wall Forms not Under Stress	1000 psi
Wall Forms under Stress	2200 psi
Backfill and Cover clear	2400 psi

In lieu of using concrete strength cylinders to determine when falsework, forms, and housings can be removed, an approved maturity meter may be used to determine concrete strengths by inserting probes into concrete placed in a structure. The minimum number of maturity meter probes required for each structural component shall be in accordance with Subsection 907-804.03.15. Procedures for using the maturity meter and developing the strength/maturity relationship shall follow the requirements of Subsection 907-804.03.15. Technicians using the maturity meter or calculating strength/maturity graphs shall meet the requirements of Subsection 907-804.03.15.

907-601.05--Basis of Payment. Add the “907” prefix to the pay items listed on page 352.

MISSISSIPPI DEPARTMENT OF TRANSPORTATION

SPECIAL PROVISION NO. 907-618-9 **CODE: (IS)**

DATE: 11/08/2012

SUBJECT: Placement of Temporary Traffic Stripe

Section 618, Maintenance of Traffic and Traffic Control Plan, of the 2004 Edition of the Mississippi Standard Specifications for Road and Bridge Construction is hereby amended as follows.

907-618.03.3--Safe Movement of Traffic. Delete subparagraphs (2) and (3) of Subsection 618.03.3 on page 416, and substitute the following.

(2) Temporary edge lines on projects requiring shoulders constructed of granular material may be delayed for a period not to exceed three (3) days.

Temporary edge lines placed on the final pavement course of projects requiring paved shoulders with surface treatment may be placed on the adjacent shoulder in as near the permanent location as possible until the surface treatment is placed. When the edge lines are obliterated by the placement of the surface treatment, the edge lines shall be placed in the permanent stripe location. The replacement of edge lines may be delayed for a period not to exceed three (3) days for a two or three-lane roads.

Delete the first sentence of next to last paragraph of Subsection 618.03.3 on page 416 and substitute the following.

Permanent pavement markings are to be applied no sooner than 10 days nor later than 45 days after placement of the final lift of pavement.

MISSISSIPPI DEPARTMENT OF TRANSPORTATION

SPECIAL PROVISION NO. 907-618-13 **CODE: (SP)**

DATE: 06/03/2014

SUBJECT: Temporary Construction Signs

Section 618, Maintenance of Traffic and Traffic Control Plan, of the 2004 Edition of the Mississippi Standard Specifications for Road and Bridge Construction is hereby amended as follows.

907-618.03--Construction Requirements.

907-618.03.2--Barricades, Signs, and Flaggers. Delete the second paragraph of Subsection 618.03.2 on page 414, and substitute the following.

Flaggers shall be stationed at such points as may be deemed necessary.

Temporary construction signs shall be removed as their use becomes inapplicable. However, placing temporary signs and their supports flat on the ground outside the shoulder break line will be allowed.

907-618.05--Basis of Payment. Delete the first two pay items listed on page 418, and substitute the following.

907-618-A: Maintenance of Traffic - lump sum

907-618-B: Additional Construction Signs - per square foot

MISSISSIPPI DEPARTMENT OF TRANSPORTATION

SPECIAL PROVISION NO. 907-625-6 **CODE: (SP)**

DATE: 07/19/2011

SUBJECT: Painted Traffic Markings – Blue-ADA

Section 625, Painted Traffic Markings, of the 2004 Edition of the Mississippi Standard Specifications for Road and Bridge Construction is hereby amended as follows:

907-625.02--Materials. After the first paragraph of Subsection 625.02.1 on page 440, add the following:

Blue-ADA marking material shall meet the requirements of Section 710 with the exception that the color shall be blue-ADA.

907-625.05--Basis of Payment. Add the following pay items to the list of pay items on pages 442 and 443.

907-625-E: Detail Traffic Stripe, Blue-ADA - per linear foot

907-625-F: Legend, Blue-ADA - per square foot or linear foot

MISSISSIPPI DEPARTMENT OF TRANSPORTATION

SPECIAL PROVISION NO. 907-626-25 **CODE: (IS)**

DATE: **11/13/2012**

SUBJECT: **Thermoplastic Traffic Markings**

Section 626, Thermoplastic Traffic Markings, of the 2004 Edition of the Mississippi Standard Specifications for Road and Bridge Construction is hereby amended as follows.

907-626.01--Description. After the last sentence of the first paragraph of Subsection 626.01 on page 443, add the following.

All pavement marking material, excluding edge lines over rumble strips, shall be applied using the extrusion/ribbon method. Edge lines placed over rumble strips shall be applied using the atomization/spray method.

907-626.03.1.1--Equipment. After the second paragraph of Subsection 626.03.1.1 on page 444, add the following.

When edge lines are placed over rumble strips, the equipment must be able to apply the marking material using the atomization/spray method instead of extrusion/ribbon method.

907-626.03.1.2--Construction Details. Delete the second sentence of the first full paragraph of Subsection 626.03.1.2 on page 445, and substitute the following.

Unless otherwise specified in the plans or contract documents, the thickness shall be 90 mils for edge lines, center lines, lane lines, barrier lines and detail stripe including gore markings, and 120 mils for crosswalks, stop lines, and railroad, word and symbol markings.

After the last sentence of the third full paragraph of Subsection 626.03.1.2 on page 445, add the following.

When double drop thermoplastic stripe is called for in the contract, additional beads by the drop-on method shall be applied as follows.

Class A glass beads at a rate of not less than three pounds of beads per 100 feet of six-inch stripe.
Class B glass beads at a rate of not less than three pounds of beads per 100 feet of six-inch stripe.

The Class B glass beads shall be applied to the newly placed stripe first, followed by the application of the Class A glass beads.

907-626.05--Basis of Payment. Delete the pay items listed on page 446 and substitute the following.

907-626-A:	6" Thermoplastic* Traffic Stripe, Skip White	- per linear foot or mile
907-626-B:	6" Thermoplastic* Traffic Stripe, Continuous White	- per linear foot or mile
907-626-C:	6" Thermoplastic* Edge Stripe, Continuous White	- per linear foot or mile
907-626-D:	6" Thermoplastic* Traffic Stripe, Skip Yellow	- per linear foot or mile
907-626-E:	6" Thermoplastic* Traffic Stripe, Continuous Yellow	- per linear foot or mile
907-626-F:	6" Thermoplastic* Edge Stripe, Continuous Yellow	- per linear foot or mile
907-626-G:	Thermoplastic* Detail Stripe, Color	- per linear foot
907-626-H:	Thermoplastic* Legend, White	- per linear foot or square foot

* Indicate Double Drop if applicable

MISSISSIPPI DEPARTMENT OF TRANSPORTATION

SPECIAL PROVISION NO. 907-681-2 **CODE: (IS)**

DATE: **12/02/2004**

SUBJECT: **Submittal Data**

Section 681, Roadway Lighting System, of the 2004 Edition of the Mississippi Standard Specifications for Road and Bridge Construction is hereby amended as follows:

Delete the first paragraph of Subsection 681.04.2 on page 568 and substitute the following:

907-681.04--Basic Materials and Methods. The Contractor shall submit to the Engineer eight (8) copies of submittal data for all electrical materials and equipment proposed for use not later than forty-five (45) days prior to beginning any lighting work.

MISSISSIPPI DEPARTMENT OF TRANSPORTATION

SPECIAL PROVISION NO. 907-682-14 **CODE: (SP)**

DATE: **02/09/2016**

SUBJECT: **RV Campground Electrical Pedestals**

PROJECT: **SP-0303-00(012) / 107179301 -- Claiborne County**

Section 682, Electrical Distribution System, of the 2004 Edition of the Mississippi Standard Specifications for Road and Bridge Construction as amended by this special provision is applicable to RV Campground Electrical Pedestals only.

907-682.01--Description. This work consists of furnishing all materials required to install a campground pedestal at locations indicated on the plans in conformity with the plans and these specifications.

907-682.02--Materials. Materials for the RV campground pedestal shall be NEMA 3R enclosure with a 50A 2-pole breaker and receptacle, a 30A 1-pole breaker and receptacle, and a 20A 1-pole breaker and GFI duplex receptacle. The RV campground pedestal shall have separate pedestal and underground pedestal extension. The RV campground pedestal shall be rated120/240 VAC single-phase and UL Listed. The device shall be factory wired with lockable panels.

907-682.03--Construction Requirements. The pedestals shall be installed in accordance with the details on the plans or as directed by the Engineer.

907-682.03--Method of Measurement. RV campground electrical pedestal as shown in the plans will be measured as a unit quantity per each.

907-683.04--Basis of Payment. RV campground electrical pedestal, measured as prescribed above, will be paid at the contract unit price per each, which price shall be full compensation for furnishing materials as shown in the plans; for installing as shown in the plans and final cleanup; and for all equipment, labor, tools and incidentals to complete the work.

Payment will be made under:

907-682-J RV Campground Electrical Pedestal - per each

MISSISSIPPI DEPARTMENT OF TRANSPORTATION

SPECIAL PROVISION NO. 907-683-12 **CODE: (SP)**

DATE: 8/10/2015

SUBJECT: Light Emitting Diode (LED) Luminaires

Section 683, Lighting Assemblies, of the 2004 Edition of the Mississippi Standard Specifications for Road and Bridge Construction as amended by this special provision is applicable for Light Emitting Diode (LED) Luminaire Systems Only.

907-683.01--Description. After the last sentence of Subsection 683.01 on page 574, add the following.

Where called for on the plans, lighting fixtures shall be light emitting diode (LED) type. LED fixtures shall meet the requirements as set forth in the following sections.

907-683.02--Materials. After Subsection 683.02.4 on page 574, add the following.

907-683.02.5--Light Emitting Diode (LED) Lighting Fixture. The materials used in this construction shall meet the requirements of Subsection 907-723.09.

907-683.05--Basis of Payment. Add the following to the list of pay items on page 576.

907-683-A: Lighting Assembly, High Mast, LED, Type - per each

907-683-B: Lighting Assembly, Low Mast, LED, Type - per each

MISSISSIPPI DEPARTMENT OF TRANSPORTATION

SPECIAL PROVISION NO. 907-699-5 **CODE: (SP)**

DATE: **12/17/2013**

SUBJECT: **Construction Stakes**

Section 699, Construction Stakes, of the 2004 Edition of the Mississippi Standard Specifications for Road and Bridge Construction is hereby deleted and replaced as follows.

SECTION 907-699 - CONSTRUCTION STAKES

907-699.01--Description. This work consists of performing all calculations and other work necessary to establish and/or verify all horizontal and vertical control data; and furnishing, placing and maintaining roadway construction stakes or bridge construction stakes, or both, necessary for the proper prosecution of all features and items of the work under contract. This shall include, but not be limited to, grades and drainage structure locations, lengths, elevations and skews. When the contract includes a pay item for roadway construction stakes as provided herein, any references in other sections of the Standard Specifications to establishment of control points or construction staking "by the Department" shall be construed to mean "by the Contractor".

This work may be performed utilizing Automated Machine Guidance technologies and systems in accordance with the standard specifications and contract documents. Automated Machine Guidance (AMG) is defined as the utilization of positioning technologies such as Global Positioning Systems (GPS), Robotic Total Stations, lasers, and sonic systems to automatically guide and adjust construction equipment according to the intended design requirements. Global Positioning Systems (GPS) shall NOT be used for determining any points above the subgrade line. The Contractor may use any type of AMG system(s) that result in compliance with the contract documents and applicable Standard Specifications.

Automated Machine Guidance (AMG) is not a mandatory requirement. Automated Machine Guidance (AMG), conventional staking, or a combination of both may be used at the Contractor’s option for staking on this project.

907-699.02--Materials. The Contractor shall furnish all personnel, materials, equipment and devices necessary for determining, establishing, setting, checking and maintaining points, lines, grades and layout of the work. All surveying equipment shall be properly adjusted and suited for performing the work required. Traffic control necessary for the proper execution of the work shall be furnished by the Contractor without separate measurement for payment. Stakes shall be of sufficient length, thickness and quality to serve the purpose for which they are being used.

All equipment required to accomplish automated machine guidance shall be provided by the Contractor. The Contractor may use any type of AMG equipment that achieves compliance with the contract documents and applicable Standard Specifications.

The Contractor shall provide the Department with an acceptable portable grade-verification device (Rover) to be used by the Department during the duration of the contract. On large projects with high production rates, the Contractor may have to provide more than one device. At the end of the contract, the device will be returned to the Contractor. This device shall have the same capabilities as the unit used by the Contractor.

907-699.03--Construction Requirements.

907-699.03.1--General. The Department will establish, one time only, secondary control points with elevations at distances not to exceed 1500 feet or that minimum distance necessary to maintain inter-visibility. For bridge work, the Engineer's field control will consist of a stationed baseline reference point near each end of the bridge(s) and one accessible bench mark near each bridge site. For the purpose of determining responsibility for construction stakes, lines and grades, a box bridge will not be considered as a bridge. The Contractor shall verify the accuracy of the control points before proceeding with the layout for construction.

When errors are discovered and control points do not agree with the plans, the Contractor shall promptly notify the Engineer in writing, and explain the problem in detail. The Engineer will advise the Contractor within five (5) working days of any corrective actions which may be deemed necessary.

The Contractor will be responsible for verifying and modifying, as necessary to best fit existing field conditions, lengths, locations, elevations and skew angles of all drainage structures shown on the construction plans. All junction box and inlet locations and heights shall also be verified and modified as necessary to fit existing field conditions. Modifications to the plans shall not be made without the consent of the Project Engineer. The Contractor will not be responsible for determining the size of drainage structures, but should immediately report any suspected error to the Engineer. Heights of fill over drainage structures shall be checked to verify class of pipe, bedding and the appropriate standard and/or modified standard drawing(s) required in the construction with any differences from the plans being reported to the Engineer.

The Contractor shall perform work necessary to verify alignment and plan grades on all roadway intersections and tie-ins. Any discrepancies in grades, alignment, location and or dimension detected by the Contractor shall immediately be brought to the attention of the Project Engineer.

The Contractor shall employ sufficient qualified personnel experienced in highway surveying and layout to complete the work accurately. The Contractor shall also determine and provide all additional grade controls and staking operations necessary to secure a correct layout and construction of the work. All minor variations in layout and grades required to meet field conditions shall be resolved with the Engineer and shall not be considered justification for adjusting contract price or time.

Examples of minor variations in layout and grades are:

(a) Adjustment of drainage or other structure length, alignment, and flow line elevation.

(b) The adjustment of grades and alignment at roadway intersections, cross-overs, railroad crossings, interchanges, existing bridges and roadways.

(c) Adjustment of curve data.

The Contractor will be responsible for calculating and laying out all additional lines, grades, elevations and dimensions necessary to construct the work required in the plans. All grades and other layout data computed by the Contractor shall be recorded and a copy of this data shall be furnished, with sufficient time for checking, to the Engineer before field work is started. The originals of all data shall be furnished to the Engineer on or before final inspection for the Department's permanent file. The Contractor shall also furnish personnel to assist the Engineer in taking tolerance verification checks or other notes to determine whether specified tolerances are met. Any inspection or checking of the Contractor's layout by the Engineer and the approval of all or any part of it will not relieve the Contractor of the responsibility to secure proper dimensions, grades, and elevations of the several parts of the work.

Prior to beginning construction on any structure which is referenced to an existing structure or topographical feature, the Contractor shall check the pertinent location and grades of the existing structures or topographical features to determine whether the location and grade shown on the plans are correct.

The Contractor shall stake centerline control at each station, BOP, EOP, PC, PT, SC, CS, TS, ST, and equations just before field cross sectioning by the Department for both original and final cross sections.

The Contractor shall furnish "as built" finish centerline elevations to the Project Engineer prior to final inspection of the project.

The Contractor shall set stakes and/or flags on the right-of-way line at each station and right-of-way break or as directed by the Engineer before clearing operations are started on any section of roadway.

Regardless of the method used, the Contractor shall meet the surface tolerances addressed in Section 321.

The Contractor shall exercise care in the preservation of stakes and bench marks and shall reset them when they are damaged, lost, displaced or removed. The Contractor shall use competent personnel and suitable equipment for the layout work required and shall provide that it be performed under the supervision of, or directed by, a Registered Professional Engineer or Registered Land Surveyor who is duly registered and entitled to practice as a Professional Engineer or Professional Land Surveyor in the State of Mississippi. The duties performed by said Registrant shall conform to the definitions under the "practice of engineering" and practice of "land surveying" in Mississippi Law and the latest edition of the MDOT Survey Manual. The MDOT Survey Manual can be obtained online at the following address.

http://sp.mdot.ms.gov/RoadwayDesign/Pages/MDOT-Survey-Manual.aspx

The Contractor shall not engage the services of any person in the employ of the Department for the performance of any of the work covered by this Section or any person who has been employed by the Department within the past six months except those who have legitimately retired from service with the Department during this period.

All cross sections, measurements, and tickets required for determining pay quantities will be the responsibility of the Department.

The Department reserves the right to check for accuracy any or all of the Contractor's layout work and shall be assisted by the Contractor's personnel in such checking. When errors or discrepancies are found, the Contractor will take measures necessary to correct, at no expense to the State, any construction that has been performed using the improper layout. Any inspection, checking and approval thereof by the Engineer of work for which the Contractor is responsible will not relieve the Contractor of responsibility to secure correct dimensions, grades, elevations, alignments and locations of the work for satisfactory completion of the project and as a condition for final acceptance by the Department.

907-699.03.2--Conventional Staking. In addition to the requirements set forth in Subsection 907-699.03.1, the following shall be required when using the conventional staking method.

On grading projects, the Contractor shall set slope stakes at each station and at the beginning and end of spirals and curves. Closer intervals will be required for sharp changes in grades or alignment, widening and certain other geometric details.

The Contractor shall set subgrade blue tops on centerline, break points and at the left and right subgrade shoulder lines at intervals of not more than 100 feet on tangents and intervals of not more than 50 feet in curves. Closer intervals will be required for sharp changes in grades or alignment, widening, or super elevation.

The Contractor shall furnish personnel to assist the Engineer in taking stringline and other notes to determine whether specified tolerances are met.

On paving contracts, the Contractor shall set subgrade, base and paving blue tops. The base and pavement grade stakes shall be set on intervals in accordance with the applicable requirements of Sections 321, 403 and 501.

907-699.03.3--Automated Machine Guidance. In addition to the requirements set forth in Subsection 907-699.03.1, the following shall be required when using the automated machine grading method.

907-699.03.3.1--Automated Machine Guidance Work Plan. The Contractor shall submit a comprehensive written Automated Machine Guidance Work Plan to the Engineer for review at least 30 days prior to use. The Project Engineer will have to concur with the Plan prior to the Contractor performing any AMG work. The submittal of an AMG Work Plan shall be an indication of the Contractor's intention to utilize AMG instead of conventional methods on the

project areas and elements stated in the Work Plan. The Engineer shall review the Automated Machine Guidance Work Plan to ensure that the requirements of this special provision are addressed. The Contractor shall assume total responsibility for the performance of the system utilized in the Work Plan. Any update or alteration of the Automated Machine Guidance Work Plan in the course of the work shall be approved and submitted to MDOT for determination of conformance with requirements of this special provision.

The Automated Machine Guidance Work Plan shall describe how the automated machine guidance technology will be integrated into other technologies employed on the project. This shall include, but not limited to, the following:

1. A description of the manufacturer, model, and software version of the AMG equipment.
2. Information on the Contractor's experience in the use of Automated Machine Guidance system (or Related Technologies) to be used on the project, including formal training and field experience of project staff.
3. A single onsite staff person as the primary contact, and up to one alternate contact person for Automated Machine Guidance technology issues.
4. A definition of the project boundaries and scope of work to be accomplished with the AMG system.
5. A description of how the project proposed secondary control(s) is to be established. It shall also include a list and map detailing control points enveloping the site.
6. A description of site calibration procedures including, but not limited to, equipment calibration and the frequency of calibration as well as how the equipment calibration and information will be documented to MDOT and the Project Engineer. The documentation shall contain a complete record of when and where the tests were performed and the status of each equipment item tested within or out of the ranges of required tolerances.
7. A description of the Contractor's quality control procedures for checking mechanical calibration and maintenance of equipment. It shall also include the frequency and type of checks to be performed.
8. A description of the method and frequency of field verification checks and the submission schedule of results to the Project Engineer.
9. A description of the Contractor's contingency plan in the event of failure/outage of the AMG system.
10. A schedule of Digital Terrain Models (DTM) intended for use on the project. This shall be submitted to the Engineer for review, feedback, and communication.

907-699.03.3.2--State's Responsibilities. The District Surveyor will set the primary horizontal and vertical control points in the field for the project as per latest edition of the MDOT Survey Manual. The control points shall be in Mississippi State Plane coordinate system.

MDOT will provide an electronic alignment file and primary control file for the project. This file will be based on the appropriate Mississippi State Plane Coordinate Zone either West or East. These files will be created with the computer software applications MicroStation (CADD software) and GEOPAK (civil engineering software). The data files will be provided in the native formats. The Contractor shall perform necessary conversion of the files for their selected grade control equipment, field verify the data for accuracy, and immediately report any errors to

MDOT.

MDOT will provide design data, if available, in an electronic format to the Contractor. These files will be created with the computer software applications MicroStation (CADD software) and GEOPAK (civil engineering software). The data files will be provided in the native formats as specified in the Data Format section of this specification. No guarantee is made to the data accuracy or completeness, or that the data systems used by MDOT will be directly compatible with the systems used by the Contractor. Information shown on the paper plans marked with the seal (official plans as advertised) shall govern.

The Engineer will perform spot checks as necessary of the Contractor's machine control grading results, surveying calculations, records, field procedures, and actual staking. If the Engineer determines that the work is not being performed in accordance with the Specifications, the Engineer shall order the Contractor to re-construct the work to the requirements of the contract documents at no additional cost to the Department.

907-699.03.3.3--Contractor's Responsibilities. The Contractor shall provide formal training, as requested, on the use of the Automated Machine Guidance Equipment, including Rover, and the Contractor's systems to MDOT project personnel prior to the start of construction activities utilizing AMG. This training is for providing MDOT project personnel with an understanding of the equipment, software, and electronic data being used by the Contractor.

The Contractor shall use the alignment and control data provided by MDOT.

The Contractor shall bear all costs, including but not limited to the cost of actual reconstruction work that may be incurred due to errors in application of Automated Machine Guidance techniques or manipulation of MDOT design data in Digital Terrain Models (DTM). The Contractor shall also bear all costs associated with any graphical grading outside the model / typical section, such as tying to existing grades at the beginning or end of a project.

The Contractor shall be responsible for converting the information on the plans and/or electronic data file provided by MDOT into a format compatible with the Contractor's AMG system.

The Contractor shall establish secondary control points at locations along the length of the project and outside the project limits and/or where work is performed beyond the project limits as required by the Automated Machine Guidance system utilized. The Contractor shall establish this secondary control using survey procedures as outlined in the latest edition of the MDOT Survey Manual. A copy of all new control point information shall be provided to the Engineer prior to construction activities. The Contractor shall be responsible for all errors resulting from their efforts and shall correct deficiencies to the satisfaction of the Engineer and at no additional cost to the State.

The Contractor shall preserve all reference points and monuments that are established by the District Surveyor outside the construction limits. If the Contractor fails to preserve these items, they shall be re-established by the Contractor to their original quality at no additional cost to the State.

The Contractor shall set grade stakes at the top of the finished sub-grade and base course at all hinge points on the typical sections at 1000-foot maximum intervals on mainline, critical points such as, but not limited to, PC's, PT's, beginning and ending super elevation transition sections, middle of the curve, and at least two locations on each of the side roads and ramps, and at the beginning and end of each cross slope transition where Automated Machine Guidance is used. These grade stakes shall be established using conventional survey methods for use by the Engineer to check the accuracy of the construction.

On grading projects, the Contractor shall set slope stakes and centerline stationing every 500 feet and at the beginning and end of spirals and curves. Closer intervals will be required for sharp changes in grades or alignment, widening and certain other geometric details.

The staking requirements for pavement grade stakes addressed in Sections 403 and 501will not apply. The Contractor shall furnish an acceptable portable grade-verification device(s) (Rover) to verify grade tolerances.

The Contractor will be required to set 20 grade points (hubs) per mile at locations determined by the Engineer for field verification. If tolerances are not met, additional grade points may be required by the Engineer.

The Contractor shall furnish personnel to assist the Engineer in taking tolerance verification checks as necessary to determine whether specified tolerances are met.

The Contractor shall meet the same accuracy requirements as detailed in the Mississippi Standard Specifications for Road and Bridge Construction.

The Contractor shall be responsible for implementing the AMG system using the Mississippi State Plane Coordinate System. No localization methods will be accepted.

907-699.03.3.4--Data Format. It is the Contractor's responsibility to produce the Digital Terrain Model(s) and/or 3D line work needed for Automated Machine Guidance. MDOT does not produce this data in its design process. MDOT does provide CADD files created in the design process to the Contractor. The CADD files provided by MDOT are provided in the native software application formats in which they are created with no conversions, and their use in developing 3D data for machine guidance is at the discretion of the Contractor. The CADD files that may be available are listed below. Cross-Sections are one of the items provided but are not necessarily created at critical design locations. Therefore their use in Digital Terrain Models (DTM) for AMG is limited.

1. Project Control - Microstation DGN file and ASCII file
2. Existing Topographic Data - Microstation DGN file(s)
3. Preliminary Surveyed Ground Surface - GeoPak TIN, if available
4. Horizontal and Vertical alignment information - GeoPak GPK file and/or Microstation DGN file(s)
5. 2D Design line work (edge of pavement, shoulder, etc.) - Microstation DGN file(s)

6. Cross sections - Microstation DGN file(s), GeoPak format
7. Superelevation - Microstation DGN file(s), GeoPak format
8. Form Grades - Microstation DGN file(s)
9. Design Drainage - Microstation DGN file(s)

It is expressly understood and agreed that MDOT assumes no responsibility in respect to the sufficiency or accuracy of these CADD files. These files are provided for convenience only and the contract plans are the legal document for constructing the project.

907-699.04--Method of Measurement. Construction stakes will be measured as a lump sum quantity. When Pay Item No. 907-699-A, Roadway Construction Stakes, is provided in the contract, measurement shall include the staking of all bridges, including detour bridges, which are a part of the contract.

907-699.04.1--Roadway Construction Stakes. Roadway Construction Stakes will be measured for payment in accordance with the following schedule:

(a) When one percent of the original contract amount is earned from all direct pay items, 10 percent of the amount bid for Roadway Construction Stakes will be paid.
(b) When five percent of the original contract amount is earned from all direct pay items, 25 percent of the amount bid for Roadway Construction Stakes will be paid.
(c) When 20 percent of the original contract amount is earned from all direct pay items, 50 percent of the amount bid for Roadway Construction Stakes will be paid.
(d) After the Contractor has earned 50 percent of the original value of all direct pay items, the amount paid will be based on the contract percent complete.

907-699.04.2--Bridge Construction Stakes. Bridge Construction Stakes will be measured for payment in accordance with the following schedule:

(a) When one percent of the original contract value of all bridge items is earned, 10 percent of the amount bid for Bridge Construction Stakes will be paid.
(b) When five percent of the original contract value of all bridge items is earned, 25 percent of the amount bid for Bridge Construction Stakes will be paid.
(c) When 20 percent of the original contract value of all bridge items is earned, 50 percent of the amount bid for Bridge Construction Stakes will be paid.
(d) After the Contractor has earned 50 percent of original contract value of all bridge items, the amount paid will be based on the percentage of work completed on all bridge items.

907-699.05--Basis of Payment. Construction stakes, measured as prescribed above, will be paid for at the contract lump sum price, which shall be full compensation for completing the work.

Payment will be made under:

907-699-A: Roadway Construction Stakes - lump sum

907-699-B: Bridge Construction Stakes - lump sum

MISSISSIPPI DEPARTMENT OF TRANSPORTATION

SUPPLEMENT TO SPECIAL PROVISION NO. 907-701-5

DATE: 09/17/2014

SUBJECT: Hydraulic Cement

In the last paragraph of Subsection 907-701.04.1.1 on page 3, change "AASHTO Designation: M 240, Table 3" to "AASHTO Designation: M 240, Table 4".

MISSISSIPPI DEPARTMENT OF TRANSPORTATION

SPECIAL PROVISION NO. 907-701-5 **CODE: (SP)**

DATE: 08/20/2014

SUBJECT: Hydraulic Cement

Section 701, Hydraulic Cement, of the 2004 Edition of the Mississippi Standard Specifications for Road and Bridge Construction is hereby amended as follows:

Delete Subsection 701.01 on pages 595 & 596, and substitute the following:

907-701.01--General. The following requirements shall be applicable to hydraulic cement:

Only hydraulic cements conforming to Section 701 shall be used. Hydraulic cements shall not be listed or designated as meeting more than one AASHTO or Department type.

Different brands of hydraulic cement, or the same brand of hydraulic cement from different mills, shall not be mixed or used alternately in any one class of construction or structure, without written permission from the Engineer; except that this requirement will not be applicable to hydraulic cement treatment of design soils, or bases.

The Contractor shall provide suitable means for storing and protecting the hydraulic cement against dampness. Hydraulic cement, which for any reason, has become partially set or which contains lumps of caked hydraulic cement will be rejected. Hydraulic cement salvaged from discarded or used bags shall not be used.

The temperature of bulk hydraulic cement shall not be greater than l65°F at the time of incorporation in the mix.

Acceptance of hydraulic cement will be based on the certification program as described in the Department's Materials Division Inspection, Testing, and Certification Manual and job control sampling and testing as established by Department SOP.

Retests of hydraulic cement may be made for soundness and expansion within 28 days of test failure and, if the hydraulic cement passes, it may be accepted. Hydraulic cement shall not be rejected due to failure to meet the fineness requirements if upon retests after drying at 212°F for one hour, it meets such requirements.

Delete Subsection 701.02 on page 596, and substitute the following:

907-701.02--Portland Cement.

907-701.02.1--General.

907-701.02.1.1--Types of Portland Cement. Portland cement (cement) shall be either Type I or Type II conforming to AASHTO Designation: M85. Type III cement conforming to AASHTO Designation: M85 or Type III (MS), as defined by the description below Table 1, may be used for the production of precast or precast-prestressed concrete members.

907-701.02.1.2--Alkali Content. All cement types in this Subsection shall meet the Equivalent alkali content requirement for low-alkali cements listed in AASHTO Designation: M85, Table 2.

907-701.02.2--Replacement by Other Cementitious Materials. The maximum replacement of cement by weight is 25% for fly ash or 50% for ground granulated blast furnace slag (GGBFS). The minimum tolerance for replacement shall be 5% below the maximum replacement content. Replacement contents below this minimum tolerance by fly ash or GGBFS may be used, but shall not be given any special considerations, like the maximum acceptance temperature for portland cement concrete containing pozzolans. Special considerations shall only apply for replacement of cement by fly ash or GGBFS.

907-701.02.2.1--Portland Cement Concrete Exposed to Soluble Sulfate Conditions or Seawater. When portland cement concrete is exposed to moderate or severe soluble sulfate conditions, or to seawater, cement types and replacement of cement by Class F fly ash, GGBFS, or silica fume shall be as follows in Table 1.

Table 1- Cementitious Materials for Soluble Sulfate Conditions

Sulfate Exposure	Water-soluble sulfate (SO_4) in soil, % by mass	Sulfate (SO_4)in water, ppm	Cementitious material required*
Moderate and Seawater	0.10 - 0.20	150 - 1,500	Type II **, ***, **** cement, or Type I cement with one of the following replacements of cement by weight: 25% Class F fly ash, 50% GGBFS, or 8% silica fume
Severe	0.20 - 2.00	1,500 - 10,000	Type I cement with a replacement by weight of 50% GGBFS, or Type II cement with one of the following replacements of cement by weight: 25% Class F fly ash, 50% GGBFS, or 8% silica fume

* The values listed in this table for replacement of portland cement by the cementitious materials listed are maximums and shall not be exceeded. The

minimum tolerance for replacement shall be 0.5% below the maximum replacement content. Replacement contents below this minimum tolerance by the cementitious materials listed in this table do not meet the requirements for the exposure conditions listed and shall not be allowed.

** Type III cement conforming to AASHTO Designation: M85 with a maximum 8% tricalcium aluminate (C_3A) may be used in lieu of Type II cement as allowed in Subsection 907-701.02.1; this cement is given the designation "Type III(MS)".

*** Blended cement meeting the sulfate resistance requirements of Subsection 907-701.04 may be used in lieu of Type II as allowed in Subsection 907-701.04.

**** Class F fly ash or GGBFS may be added as a replacement for cement as allowed in Subsection 907-701.02.2.

Class C fly ash shall not be used as a replacement for cement in any of the sulfate exposure conditions listed above.

907-701.02.2.2--Cement for Soil Stabilization Exposed to Soluble Sulfate Conditions or Seawater. When portland cement for use in soil stabilization is exposed to moderate or severe soluble sulfate conditions, or to seawater, cement types and replacement of cement by Class F fly ash or GGBFS shall meet the requirements of Subsection 907-701.02.2.1. Silica fume shall be used to bring the cementitious materials into compliance with the requirements of Table 1.

Delete Subsection 701.03 on page 596, and substitute the following:

907-701.03--Masonry Cement. Masonry cement shall conform to ASTM Designation: C 91 and shall only be used in masonry applications.

Delete Subsection 701.04 on page 596, and substitute the following:

907-701.04--Blended Hydraulic Cement.

907-701.04.1--General.

907-701.04.1.1--Types of Blended Cement. Blended hydraulic cements (blended cements) shall be of the following types and conform to AASHTO Designation: M 240:

Type IS – Portland blast-furnace slag cement
Type IP – Portland-pozzolan cement
Type IL – Portland-limestone cement

Blended cement Types IS and IP for use in portland cement concrete or soil stabilization exposed to the moderate soluble sulfate condition or exposure to seawater as defined in Table 1 shall meet the Sulfate resistance requirement listed in AASHTO Designation: M 240, Table 3 and the "(MS)" suffix shall be added to the type designation.

907-701.04.1.2--Alkali Content. All blended cement shall be made with clinker that would result in cement meeting the requirements of Subsection 907-701.02.1.2 when used in the production of AASHTO Designation: M 85, Type I or Type II cement.

907-701.04.2--Replacement by Other Cementitious Materials. The maximum replacement of blended cement Type IL by weight is 35% for fly ash or 50% for GGBFS. Replacement contents below 20% fly ash or 45% GGBFS may be used, but shall not be given any special considerations, like the maximum acceptance temperature for portland cement concrete containing pozzolans. Special considerations shall only apply for replacement of blended cement by fly ash or GGBFS. No additional cementitious materials, such as Portland cement, performance hydraulic cement, fly ash, GGBFS, metakaolin, or others, shall be added to or as a replacement for blended cement Types IS and IP.

907-701.04.3--Exposure to Soluble Sulfate Conditions or Seawater. When portland cement concrete or blended cement for soil stabilization is exposed to moderate soluble sulfate conditions or to seawater, where the moderate soluble sulfate condition is defined in Table 1, the blended cement shall meet the sulfate resistance requirement listed in AASHTO Designation: M 240, Table 3.

When portland cement concrete or blended cement for soil stabilization is exposed to severe soluble sulfate conditions, where the severe soluble sulfate condition is defined in Table 1, blended cements shall not be used.

MISSISSIPPI DEPARTMENT OF TRANSPORTATION

SPECIAL PROVISION NO. 907-702-5 **CODE: (SP)**

DATE: **08/12/2014**

SUBJECT: **Specifications for Bituminous Materials**

Section 702, Bituminous Materials, of the 2004 Edition of the Mississippi Standard Specifications for Road and Bridge Construction is hereby amended as follows.

907-702.05--Petroleum Asphalt Cement. Delete the third paragraph of Subsection 702.05 on page 598, and substitute the following.

The bituminous material used in all types of asphalt mixtures shall conform to AASHTO Designation: M 320, Performance Grade PG 67-22, as modified in the table below, except that Polyphosphoric Acid (PPA) may be used at low dosage rates as a modifier to enhance the physical properties of a base binder to meet the requirements for Performance Grade PG 67-22. In addition, PPA may be used as a catalyst or mixing agent at low dosage rates in the production of Polymer Modified, Performance Grade PG 76-22.

When PPA is used as a modifier, in no case shall the PPA modifier be used to adjust the physical properties of the binder a full binder grade. For example: the base binder (unmodified) is graded as a PG 64-22 and should only be modified by the addition of PPA to a modified binder grade of PG 67-22.

When petroleum asphalt cement is modified by PPA, the following dosage limits shall be applied.

Grade	Dosage Limit
PG 67-22	0.75% by weight of binder
PG 76-22	0.50% by weight of binder

907-702.07--Emulsified Asphalt.

907-702.07.2--Anionic and Cationic. After the last paragraph of Subsection 702.07.2 on page 600, add the following.

LockDown (LD-7) and CQS-1h shall conform to the requirements of Table V.

907-702.07.3--Polymer Modified Cationic Emulsified Asphalt (CRS-2P). Delete the paragraph in Subsection 702.07.3 on page 600, and substitute the following.

Polymer Modified Cationic Emulsified Asphalt shall conform to the requirements of AASHTO Designation: M 316, with the following exception:

In Table 1, the Ductility, 25˚C, 5 cm/min, shall be a minimum of 100 cm.

907-702.12--Tables. After the last Table of Subsection 702.12 on page 606, add the following.

TABLE V
SPECIFICATION FOR FOG SEAL

	LD-7		CQS-1h		
Test Requirements	**Min.**	**Max.**	**Min.**	**Max.**	**Test Method**
Viscosity, Saybolt Furol, @ 25°C, Sec.	15	100	20	150	AASHTO T 72
Storage Stability Test, 24 hr, %	-	1	-	1	AASHTO T 59
Settlement, 5 day, %	-	5	-	-	AASHTO T 59
Particle Charge	-	-	Positive		AASHTO T 59
Oil Distillate, %	-	1	-	-	AASHTO T 59
Sieve Test, % *	-	0.3	-	0.1	AASHTO T 59
Residue by Distillation, %	40	-	60	-	AASHTO T 59
Test on Residue from Distilation					
Penetration @ 25°C	-	20	-	-	AASHTO T 49
Penetration @ 25°C, 100g, 5s	-	-	60	110	AASHTO T 49
Softening Point, °C	65	-	-	-	ASTM 36
Solubility in trichloroethylene, %	97.5	-	97.5	-	AASHTO T 44
Ductility @ 25°C, cm	-	-	40	-	AASHTO T 51
Original DSR @ 82° (G*/Sinδ, 10 rad/sec)	1	-	-	-	AASHTO T 111

* The Sieve result is tested for reporting purpose only, and it may be waived if no application problems are present in the field.

MISSISSIPPI DEPARTMENT OF TRANSPORTATION

SUPPLEMENT TO SPECIAL PROVISION NO. 907-703-12

DATE: **01/29/2015**

SUBJECT: **Aggregates**

In the title of Subsection 907-703.06 on page 2, delete "Hot Mix".

MISSISSIPPI DEPARTMENT OF TRANSPORTATION

SPECIAL PROVISION NO. 907-703-12 **CODE: (IS)**

DATE: 10/28/2014

SUBJECT: Aggregates

Section 703, Aggregates, of the 2004 Edition of the Mississippi Standard Specifications for Road and Bridge Construction is hereby amended as follows:

907-703.03.2.4--Gradation. Delete the table in Subsection 703.03.2.4 on page 611 and substitute the following.

Table of Sizes and Gradation of Coarse Aggregate for Portland Cement Concrete

Square Mesh Sieves	Percent Passing by Weight						
	Size No. 467	Size No. 57	Size No. 67	Size No. 7	Size No. 78	Size No. 8	Size No. 89
2 inch	100						
l½ inch	95-100	100					
1 inch		80-100	100				
3/4 inch	35-70		80-100	100	100	100	
1/2 inch		25-60		90-100	90-100	95 100	100
3/8 inch	10-30		20-55	40-70	40-75	75-100	85 100
No. 4	0-5	0-10	0-10	0-15	5-25	5-30	20-40
No. 8		0-5	0-5	0-5	0-10	0-10	0-10
No. 16					0-5	0-5	0-5

Delete the last sentence of the last paragraph of Subsection 703.03.2.4 on page 611.

907-703.04--Aggregate for Crushed Stone Courses.

907-703.04.1--Coarse Aggregate. Delete the first paragraph of Subsection 703.04.1 on page 611, and substitute the following.

Coarse aggregate, defined as material retained on No. 8 sieve, shall be either crushed limestone, steel slag, granite, concrete, or combination thereof. Crushed concrete is defined as recycled concrete pavement, structural concrete, or other concrete sources that can be crushed to meet the gradation requirements for Size No. 825B as modified below. In no case shall waste from concrete production (wash-out) be used as a crushed stone base.

907-703.04.2--Fine Aggregate. Delete the first sentence of the first paragraph of Subsection 703.04.2 on page 612, and substitute the following.

Fine aggregate, defined as material passing the No. 8 sieve, shall be material resulting from the crushing of limestone, steel slag, granite, concrete, or combination thereof.

Delete the third paragraph of Subsection 703.04.2 on page 612.

907-703.04.3--Gradation. In the table of Subsection 703.04.3 on page 613, change the requirement for the 1-inch sieve under Size No. 825 B from "75 - 98" to "75 - 100".

After the table in Subsection 703.04.3 on page 613, add the following.

If crushed concrete is used, the crushed material shall meet the gradation requirements of Size No. 825 B with the exception that the percent passing by weight of the No. 200 sieve shall be 2 – 18.

907-703.06--Aggregates for Hot Mix Asphalt.

907-703.06.1--Coarse Aggregates. Delete the third paragraph of Subsection 703.06.1 on page 613, and substitute the following.

When tested in accordance with AASHTO Designation: T 19, the dry rodded unit weight of all aggregates except expanded clay and shale shall not be less than 70 pounds per cubic foot.

907-703.06.1.2--Fine Aggregates. Delete the last sentence of Subsection 703.06.1.2 on page 614.

907-703.14--Aggregates for Bituminous Surface Treatments.

907-703.14.2--Detail Requirements.

907-703.14.2.1--Gradation. In the table entitled "Gradation Requirements For Cover Aggregate" in Subsection 703.14.2.1 on page 622, delete the requirement for the No. 16 sieve for Size No. 7 under the column "Slag or Expanded Clay".

Delete Subsection 703.19 on page 624, and substitute the following.

907-703.19--Lightweight Aggregate for Concrete.

907-703.19.1--Lightweight Aggregate for Structural Concrete. Lightweight aggregate for structural concrete shall meet the requirements of AASHTO Designation: M 195.

907-703.19.2--Lightweight Aggregate for Internal Curing of Concrete. Lightweight aggregate for internal curing of concrete shall meet the requirements of ASTM Designation: C 1761. The lightweight aggregate shall meet the gradation requirements listed in Table 1 for either "9.5 mm to 2.36 mm (3/8 in. to No. 8)" Coarse aggregate, "9.5 mm to 0 (3/8 in. to 0)" Combined fine and coarse aggregate, or "4.75 mm to 0 (No. 4 to 0)" Fine aggregate. The fineness modulus of the lightweight aggregate shall not be less than 2.70.

907-703.20--Aggregate for Stabilizer.

907-703.20.3--Gradation. Delete the table and notes in Subsection 703.20.3 at the top of page 626, and substitute the following.

PERCENT PASSING BY WEIGHT

Square Mesh Sieves	Shell	Coarse			Medium	Fine
		Size I	Size II Note (1)	Size III Note (3)		
3 inch				100		
2 1/2 inch	90-100			90-100		
2 inch		100				
1 1/2 inch		90-100	100	25-60		
1 inch		80-100	97-100			
3/4 inch		55-100	55-100	0-10		
1/2 inch		35-85	35-85	0-5	100	
3/8 inch		12-65	12-65		97-100	
No. 4, Note (2)		0-30	0-30		92-100	
No. 10		0-8	0-8		80-100	100
No. 40					10-40	80-100
No. 60					0-20	30-100
No. 100						15-80
No. 200	0-5	0-4	0-4		0-5	0-30
PI Material Passing No. 40					6 or less	0

Note (1): Size II is intended for use in bases in which portland cement is used.
Note (2): Ground shell shall contain at least 97% passing the No. 4 sieve.
Note (3): Size III is intended for use in stabilized construction entrances.

MISSISSIPPI DEPARTMENT OF TRANSPORTATION

SPECIAL PROVISION NO. 907-708-6 **CODE: (IS)**

DATE: 05/01/2013

SUBJECT: Non-Metal Drainage Structures

Section 708, Non-Metal Structures and Cattlepasses, of the 2004 Edition of the Mississippi Standard Specifications for Road and Bridge Construction is hereby amended as follows.

907-708.02.1.2--Fly Ash. In the first sentence of Subsection 708.02.1.2 on page 639, change "20 percent" to "25%".

907-708.02.1.4--Coarse Aggregate. Delete the last sentence of Subsection 708.02.1.4 on page 639.

907-708.02.3.2--Marking. Delete the second sentence of Subsection 708.02.3.2 on page 640, and substitute the following.

Machine made pipe shall be marked in accordance with one of the following methods: 1) the pipe shall be inscribed on the outside of the pipe and stenciled on the inside of the pipe, or 2) the pipe shall be inscribed on the inside of the pipe, only. All other pipe may be stenciled.

907-708.17--Corrugated Plastic Pipe Culverts.

907-708.17.1--Corrugated Polyethylene Pipe Culverts. Delete the first sentence of the first paragraph of Subsection 708.17.1 on page 645 and substitute the following.

Corrugated polyethylene pipe shall conform to the requirements of AASHTO Designation: M 294, Type S and/or SP, as applicable, and shall have soil tight joints, unless otherwise specified.

Delete the last sentence of the second paragraph of Subsection 708.17.1 on page 645.

After Subsection 708.17.1 on page 645, add the following.

907-708.17.1.1--Inspection and Final Acceptance of Corrugated Polyethylene Pipe Culverts. Approximately 50% of the installed length of corrugated polyethylene pipe shall be inspected for excess deflection no sooner than 30 days after the embankment material over the pipe is placed to the required subgrade elevation or the maximum required fill height. The inspection shall be performed using either electronic deflectometers, calibrated television or video cameras, or a "go, no-go" mandrel that has an effective diameter of 95% of the nominal inside diameter of the pipe.

Pipe found to have deflection values greater than 5% shall be removed and replaced at no cost to the State.

907-708.17.2--Corrugated Poly (Vinyl Chloride) (PVC) Pipe Culverts. Delete the first sentence of the first paragraph of Subsection 708.17.2 on page 645 and substitute the following.

Corrugated poly (vinyl chloride) (PVC) pipe shall conform to the requirements of AASHTO Designation: M 304 and shall have soil tight joints, unless otherwise specified. Non-perforated PVC pipe used in underdrains shall either be manufactured with an ultra-violet light inhibitor or be fully coated with an ultra-violet light inhibitor.

After Subsection 708.17.2 on page 645, add the following.

907-708.17.2.1--Inspection and Final Acceptance of Poly (Vinyl Chloride) (PVC) Pipe Culverts. Approximately 50% of the installed length of PVC pipe shall be inspected for excess deflection no sooner than 30 days after the embankment material over the pipe is placed to the required subgrade elevation or the maximum required fill height. The inspection shall be performed using either electronic deflectometers, calibrated television or video cameras, or a "go, no-go" mandrel that has an effective diameter of 95% of the nominal inside diameter of the pipe.

Pipe found to have deflection values greater than 5% shall be removed and replaced at no cost to the State.

907-708.18--Sewer Pipe Used for Underdrains.

907-708.18.1--General. After the second paragraph of Subsection 708.18.1 on page 645 add the following.

In lieu of the pipe listed in this subsection, pipe meeting the requirements of Subsection 708.19 may also be used for plastic underdrain pipe.

907-708.18.3--Type PSM Poly (Vinyl Chloride) (PVC) Sewer Pipe. After the first sentence of Subsection 708.18.3 on page 645, add the following.

Non-perforated PVC pipe shall either be manufactured with an ultra-violet light inhibitor or be fully coated with an ultra-violet light inhibitor.

907-708.18.4--Poly (Vinyl Chloride) (PVC) Corrugated Sewer Pipe. Delete the paragraph in Subsection 708.18.4 on page 645 and substitute the following.

This pipe shall conform to the following requirements. For pipe sizes less than or equal to six inches (≤ 6"), the pipe shall be Class PS46 meeting the requirements of AASHTO Designation: M 278. For pipe sizes greater than six inches (> 6"), the pipe shall meet the requirements of AASHTO Designation: M 304. Non-perforated PVC pipe shall either be manufactured with an ultra-violet light inhibitor or be fully coated with an ultra-violet light inhibitor.

Delete Subsection 708.19 on page 645 and substitute the following.

907-708.19--Corrugated Polyethylene Pipe. This pipe shall be high density polyethylene pipe or drainage tubing meet the requirements of AASHTO Designation: M 294, Type S or SP, or AASHTO Designation: M 252, Type S or Type SP, as applicable.

907-708.22.2--Exceptions to AASHTO. Delete the sixth paragraph of Subsection 708.22.2 on page 647.

MISSISSIPPI DEPARTMENT OF TRANSPORTATION

SPECIAL PROVISION NO. 907-710-1 **CODE: (SP)**

DATE: 06/24/10

SUBJECT: Fast Dry Solvent Traffic Paint

Section 710, Paint, of the 2004 Edition of the Mississippi Standard Specifications for Road and Bridge Construction is amended as follows:

After Subsection 710.05 on Page 661, add the following:

907-710.06--Fast Dry Solvent Traffic Paint. Fast dry solvent traffic paints intended for use under this specification shall include products that are single packaged and ready mixed. Upon curing, these materials shall produce an adherent, reflective pavement marking capable of resisting deformation by traffic. The manufacturer shall have the option of formulating the material according to their own specifications. However, the requirements delineated in this specification, Section 619 and Section 710 shall apply regardless of the formulation used. The material shall be free from all skins, dirt and foreign objects.

907-710.06.1--Composition.

907-710.06.1.1--Percent Pigment. The percent pigment by weight shall be not less than 51% nor more than 58% when tested in accordance with ASTM D 3723.

907-710.06.1.2--Viscosity. The consistency of the paint shall be not less than 75 nor more than 95 Krebs Units (KU) when tested in accordance with ASTM D 562.

907-710.06.1.3--Weight per Gallon. The paint shall weigh a minimum 11.8 pounds per gallon and the weight of the production batches shall not vary more than +/- 0.5 pounds per gallon from the weight of the qualification samples when tested in accordance with ASTM D 1475.

907-710.06.1.4--Total Solids. The percent of total solids shall not be less than 70% by weight when tested in accordance with ASTM D 2369.

907-710.06.1.5--Dry Time (No pick-up). The paint shall dry to a no tracking condition in a maximum of 10 minutes.

907-710.06.1.6--Volatile Organic Content. The volatile organic content (VOC) shall contain a maximum of 1.25 pounds of volatile organic matter per gallon of total non-volatile paint material when tested in accordance with ASTM D 3960.

907-710.06.1.7--Bleeding. The paint shall have a minimum bleeding ratio of 0.95 when tested in accordance with Federal Specification TT-P-115D.

907-710.06.1.8--Color. The initial daytime chromaticity for yellow materials shall fall within the box created by the following coordinates:

Initial Daytime Chromaticity Coordinates (Corner Points)

	1	2	3	4
x	0.53	0.51	0.455	0.472
y	0.456	0.485	0.444	0.4

The initial daytime chromaticity of white materials shall fall within the box created by the following coordinates:

Initial Daytime Chromaticity Coordinates (Corner Points)

	1	2	3	4
x	0.355	0.305	0.285	0.355
y	0.355	0.305	0.325	0.375

907-710.06.2--Environmental Requirements. All yellow materials using lead chromate pigments shall meet the criteria of non-hazardous waste as defined by 40 CFR 261.24 when tested in accordance with EPA Test Method 1311, Toxicity Characteristics Leaching Procedures (TCLP). The striping and marking material , upon preparation and installation, shall not exude fumes which are toxic, or detrimental to persons or property. All material using lead free pigments shall NOT contain either lead or other Resource Conservation and Recovery Act (RCCA) materials in excess of the standard defined by EPA Method 3050 and 6010.

907-710.06.3--Acceptance Procedures. Acceptance of all fast dry solvent based traffics paint will be based on the Manufacturer's Certification and Certified Test Results. The Contractor shall furnish the Engineer with three copies of the manufacturer's certification stating that each lot of material in a shipment complies with the requirements of this contract. In addition, the Contractor shall provide Certified Test Reports for all tests required by this specification. The test results shall be representative of the material contained with the shipment.

MISSISSIPPI DEPARTMENT OF TRANSPORTATION

SPECIAL PROVISION NO. 907-711-4 **CODE: (IS)**

DATE: 06/26/2009

SUBJECT: Synthetic Structural Fiber Reinforcement

Section 711, Reinforcement and Wire Rope, of the 2004 Edition of the Mississippi Standard Specifications for Road and Bridge Construction is hereby amended as follows:

After Subsection 711.03.4.3 on page 665, add the following:

907-711.04--Synthetic Structural Fiber. The synthetic structural fibers shall be approved for listing in the Department's "Approved Sources of Materials" prior to use. The synthetic structural fibers shall be added to the concrete and mixed in accordance with the manufacturer's recommended methods.

907-711.04.1--Material Properties. The fibers shall meet the requirements of ASTM Designation: C 1116, Section 4.1.3. The fibers shall be made of polypropylene, polypropylene/polyethylene blend, nylon, or polyvinyl alcohol (PVA).

907-711.04.2--Minimum Dosage Rate. The dosage rate shall be such that the average residual strength ratio ($R_{150,3.0}$) of fiber reinforced concrete beams is a minimum of 20.0 percent when the beams are tested in accordance with ASTM Designation: C 1609. The dosage rate for fibers shall be determined by the following.

The fiber manufacturer shall have the fibers tested by an acceptable, independent laboratory acceptable to the Department and regularly inspected by the Cement and Concrete Reference Laboratory of the National Institutes of Standards and Technology and approved to perform ASTM Designations: C 39, C 78, and C192.

The laboratory shall test the fibers following the requirements of ASTM Designation: C 1609 in a minimum of three (3) test specimens cast from the same batch of concrete, molded in 6 x 6 x 20-inch standard beam molds meeting the requirements of ASTM Designation: C 31. The beams shall be tested on an 18-inch span. The tests for $R_{150,3.0}$ shall be performed when the average compressive strength of concrete used to cast the beams is between 3500 and 4500 psi. The tests for compressive strength shall follow the requirements of ASTM Designation: C 39. The average compressive strength shall be determined from a minimum of two (2) compressive strength cylinders.

The value for $R_{150,3}$ shall be determined using the following equation:

$$R_{150,3.0} = \frac{f_{150,3.0}}{f_1} \times 100$$

The residual flexural strength ($f_{150,3.0}$) shall be determined using the following equation:

$$f_{150,3.0} = \frac{P_{150,3.0} \times L}{b \times d^2}$$

where:

$f_{150,3.0}$ is the residual flexural strength at the midspan deflection of L/150, (psi),
$P_{150,3.0}$ is the residual load capacity at the midspan deflection of L/150, (lbf),
L is the span, (in),
b is the width of the specimen at the fracture, (in), and
d is the depth of the specimen at the fracture, (in).

For a 6 x 6 x 20-inch beam, the $P_{150,3.0}$ shall be measured at a midspan deflection of 0.12 inch.

Additionally, $R_{150,3.0}$, $f_{150,3.0}$, and $P_{150,3.0}$ may also be referred to as R_{150}^{150}, f_{150}^{150}, and P_{150}^{150} respectively.

At the dosage rate required to achieve the minimum $R_{150,3}$, the mixture shall both be workable and the fibers shall not form clumps.

The manufacturer shall submit to the State Materials Engineer certified test reports from the independent laboratory showing the test results of each test specimen.

907-711.04.3--Job Control Requirements. The synthetic structural fibers shall be one from the Department's "Approved Sources of Materials."

At the required dosage rate, the mixture shall both be workable and the fibers shall not form clumps to the satisfaction of the Engineer. If the mixture is determined by the Engineer to not be workable or have clumps of fibers, the mixture may be rejected.

MISSISSIPPI DEPARTMENT OF TRANSPORTATION

SPECIAL PROVISION NO. 907-713-5 **CODE: (SP)**

DATE: 07/01/2015

SUBJECT: Admixtures for Concrete

Section 713, Concrete Curing Materials and Admixtures, of the 2004 Edition of the Mississippi Standard Specifications for Road and Bridge Construction is hereby amended as follows.

After the second paragraph of Subsection 713.01.2 on page 676, add the following.

Type 1-D compound may be used on bridge rails, median barriers, and other structures requiring a spray finish. When Type 1-D compound is used, it will be the responsibility of the Contractor to assure that the compound has dissipated from the structure prior to applying the spray finish and that the spray finish adheres soundly to the structure.

Delete Subsection 713.02 on pages 676 & 677, and substitute the following.

907-713.02--Admixtures for Concrete. Air-entraining admixtures used in Portland cement concrete shall comply with AASHTO Designation: M 154. Set-retarding, accelerating, and/or water-reducing admixtures shall comply with AASHTO Designation: M 194. Water-reducing admixture shall meet the minimum requirements for Type A. Set-retarding admixtures shall meet the minimum requirements for Type D. Admixtures providing a specific performance characteristic(s) other than those of water reduction or set retardation shall meet the minimum requirements for Type S. For admixtures meeting the requirements for Type S, the manufacturer shall provide data to substantiate the specific performance characteristic(s) to the satisfaction of the State Materials Engineer.

In order to obtain approval of an admixture, the State Materials Engineer shall have been furnished certified test reports, made by an acceptable independent laboratory regularly inspected by the Cement and Concrete Reference Laboratory of the National Institutes of Standards and Technology, which show that the admixture meets all the requirements of the applicable AASHTO Standard Specification.

The Department reserves the right to sample, for check tests, any shipment or lot of admixture delivered to a project.

The Department reserves the right to require tests of the material to be furnished, using the specific cement and aggregates proposed for use on the project, as suggested in AASHTO Designation: M 154 and outlined in AASHTO Designation: M 194.

After an admixture has been approved, the Contractor shall submit to the State Materials Engineer, with each new lot of material shipped, a certification from the manufacturer in accordance with the requirements of Subsection 700.05.1 and stating the material is of the same

composition as originally approved and has not been changed or altered in any way. The requirement in Subsection 700.05.1(b) is not required on the certification from the manufacturer.

Admixtures containing chlorides will not be permitted.

Failure to maintain compliance with any requirement of these specifications shall be cause for rejection of any previously approved source or brand of admixture.

Admixtures shall only be used in accordance with the manufacturer's recommended dosage range as set forth in the manufacturer's approval request correspondence. When an admixture is used in Portland cement concrete, it shall be the responsibility of the Contractor to produce satisfactory results.

907-713.02.1--Source Approval. In order to obtain approval of an admixture, the Producer/Suppliers shall submit to the State Materials Engineer the following for review: certified test reports, made by an acceptable independent laboratory regularly inspected by the Cement and Concrete Reference Laboratory of the National Institutes of Standards and Technology, which show that the admixture meets all the requirements of the applicable AASHTO or Department Specification for the specific type and the dosage range for the specific type of admixture.

907-713.02.2--Specific Requirements. Admixtures containing chlorides will not be permitted.

907-713.02.3--Acceptance. The Department reserves the right to sample, for check tests, any shipment or lot of admixture delivered to a project.

The Department reserves the right to require tests of the material to be furnished, using the specific cement and aggregates proposed for use on the project, as suggested in AASHTO Designation: M 154 and outlined in AASHTO Designation: M 194.

Failure to maintain compliance with any requirement of these specifications shall be cause for rejection of any previously approved source or brand of admixture.

With each new lot of material shipped the Contractor shall submit to the State Materials Engineer, a notarized certification from the manufacturer showing that the material complies with the requirements of the applicable AASHTO or Department Specification.

When an admixture is used, it shall be the responsibility of the Contractor to produce satisfactory results.

907-713.03--Waterproofing Admixture. This product is used as a waterproofing admixture for cast in place concrete bridge decks and bridge deck topping.

The Contractor shall submit manufacturer's product data and installation methods for each type of the products required to demonstrate the product complies with specifications.

The materials shall be installed in accordance with manufacturer's instructions.

The waterproofing admixture shall be one of the following, or an approved equal.

- Xypex Admix
- Everdure Caltite
- Hycrete W1000

The dosage rate for the above admixtures shall be as follows:

- Xypex Admix shall be 15 pounds per cubic yard.
- Everdure Caltite shall be a minimum of 1.5% by weight of cement or more as required to meet Testing Requirements outlined below.
- Hycrete W1000 shall be a minimum one (1) gallon per cubic yard or more as required to meet Testing Requirements outlined below.

Any retardation of set that occurs will depend upon the concrete mix design and the dosage rate of the admixture.

MISSISSIPPI DEPARTMENT OF TRANSPORTATION

SPECIAL PROVISION NO. 907-714-8 **CODE: (IS)**

DATE: 05/01/2013

SUBJECT: Miscellaneous Materials

Section 714, Miscellaneous Materials, of the 2004 Edition of the Mississippi Standard Specifications for Road and Bridge Construction is hereby amended as follows.

907-714.05--Fly Ash. Delete Subsections 714.05.1 & 714.05.2 on pages 680 & 681, and substitute the following.

907-714.05.1--General. The fly ash source must be approved for listing in the Department's "Approved Sources of Materials" prior to use. The acceptance of fly ash shall be based on certified test reports, certification of shipment from the supplier, and tests performed on samples obtained after delivery in accordance with the Department's Materials Division Inspection, Testing, and Certification Manual and Department SOP.

Different classes of fly ash or different sources of the same class shall not be mixed or used in the construction of a structure or unit of a structure without written permission from the Engineer.

The Contractor shall provide suitable means for storing and protecting the fly ash from dampness. Separate storage silos, bins, or containers shall be provided for fly ash. Fly ash which has become partially set or contains lumps of caked fly ash shall not be used.

The temperature of the bulk fly ash shall not be greater than 165°F at the time of incorporation into the work.

All classes of fly ash shall meet the supplementary option chemical requirement for available alkalies listed in AASHTO Designation: M 295, Table 2. Class F fly ash shall have a calcium oxide (CaO) content of less than 6.0%. Class C fly ash shall have a CaO content of greater than or equal to 8.0%.

The replacement of Portland cement with fly ash shall be in accordance with the applicable replacement content specified in Subsection 907-701.02.2.

In addition to these requirements, fly ash shall meet the following specific requirements for the intended use.

907-714.05.2--Fly Ash for Use in Concrete. When used with Portland cement in the production of concrete or grout, the fly ash shall meet the requirements of AASHTO Designation: M 295, Class C or F, with the following exception:

The loss on ignition shall not exceed 6.0 percent.

No additional cementitious materials, such as blended hydraulic cement, GGBFS, metakaolin, or others, shall be added to or as a replacement for Portland cement when used with fly ash.

907-714.06--Ground Granulated Blast Furnace Slag (GGBFS). Delete Subsection 714.06.1 on page 681, and substitute the following.

907-714.06.1--General. The GGBFS source must be approved for listing in the Department's "Approved Sources of Materials" prior to use. The acceptance of GGBFS shall be based on certified test reports, certification of shipment from the supplier, and tests performed on samples obtained after delivery in accordance with the Department's Materials Division Inspection, Testing, and Certification Manual and Department SOP.

The Contractor shall provide suitable means for storing and protecting the GGBFS against dampness and contamination. Separate storage silos, bins, or containers shall be provided for GGBFS. GGBFS which has become partially set, caked or contains lumps shall not be used.

The State Materials Engineer shall be notified in writing of the nature, amount and identity of any processing or other additions made to the GGBFS during production.

GGBFS from different mills shall not be mixed or used alternately in any one class of construction or structure without written permission from the Engineer; except that this requirement will not be applicable to cement treatment of design soils or bases.

No additional cementitious materials, such as blended hydraulic cement, fly ash, metakaolin, or others, shall be added to or as a replacement for Portland cement when used with GGBFS in the production of concrete. The replacement of Portland cement with GGBFS shall be in accordance with the applicable replacement content specified in Subsection 907-701.02.2.

Delete Subsection 714.07 on page 682, and substitute the following.

907-714.07--Additional Cementitious Materials.

907-714.07.1--Metakaolin.

907-714.07.1.1--General. Metakaolin shall only be used as a supplementary cementitious material in Portland cement concrete for compliance with the requirements for cementitious materials exposed to soluble sulfate conditions. Metakaolin from different sources shall not be mixed or used alternately in any one class of construction or structure without written permission from the Engineer. No additional cementitious materials, such as blended hydraulic cement, fly ash, GGBFS, or others, shall be added to or as a replacement for Portland cement when used with metakaolin in the production of concrete.

The State Materials Engineer shall be notified in writing of the nature, amount and identity of any processing, or other additions made to the metakaolin during production.

907-714.07.1.2--Source Approval. The approval of each metakaolin source shall be on a case

by case basis as determined by the State Materials Engineer. In order to obtain approval of a metakaolin source, the Producer/Suppliers shall submit to the State Materials Engineer the following for review: certified test reports, made by an acceptable, independent laboratory regularly inspected by the Cement and Concrete Reference Laboratory of the National Institutes of Standards and Technology, which show that the metakaolin meets all the requirements of AASHTO Designation: M295, including the Effectiveness in contributing to sulfate resistance, Procedure A, listed in AASHTO Designation: M295, Table 4 for Supplementary Optional Physical Requirements, and other requirements listed herein.

In order to demonstrate effectiveness in contributing to sulfate resistance, included in this test data shall be results of metakaolin from the proposed source tested in accordance with ASTM Designation: C 1012. There shall be two sets of test specimens per the following:

a. One set of test specimens shall be prepared using a Type I Portland cement meeting the requirements of AASHTO Designation: M85 and having a tricalcium aluminate (C_3A) content of more than 8.0%,

b. One set of test specimens shall be prepared using a Type II Portland cement meeting the requirements of AASHTO Designation: M85.

c. The proposed metakaolin shall be incorporated at the rate of 10% cement replacement in each set of test specimens and shall meet both of the acceptance criteria listed below for source approval.

The requirement for acceptance of the test sample using Type I Portland cement is an expansion of 0.10% or less at the end of six months. The requirement for acceptance of the test sample using Type II Portland cement is an expansion of 0.05% or less at the end of six months.

907-714.07.1.3--Storage. The Contractor shall provide suitable means for storing and protecting the metakaolin against dampness and contamination. Metakaolin which has become partially set, caked, or contains lumps shall not be used.

907-714.07.1.4--Specific Requirements. Metakaolin shall meet the requirements of AASHTO Designation: M 295, Class N with the following modifications:

1. The sum of SiO_2 + Al_2O_3 + Fe_2O_3 shall be at least 85%. The Material Safety Data Sheet shall indicate that the amount of crystalline silica, as measured by National Institute of Occupation Safety and Health (NIOSH) 7500 method, after removal of the mica interference, is less than 1.0%.
2. The loss on ignition shall be less than 3.0%.
3. The available alkalies, as equivalent Na_2O, shall not exceed 1.0%.
4. The amount of material retained on a No. 325 mesh sieve shall not exceed 1.0%.
5. The strength activity index at seven (7) days shall be at least 85%.

907-714.07.1.5--Acceptance. With each new lot of material shipped the Contractor shall submit to the State Materials Engineer a certified test report from the manufacturer showing that the material meets the requirements AASHTO Designation: M295, Class N and the requirements of this Subsection.

The Department reserves the right to sample, for check tests, any shipment or lot of metakaolin delivered to a project.

907-714.07.2--Silica Fume.

907-714.07.2.1--General. Silica fume shall only be used as a supplementary cementitious material in Portland cement concrete for compliance with the requirements for cementitious materials exposed to soluble sulfate conditions. Silica fume from different sources shall not be mixed or used alternately in any one class of construction or structure without written permission from the Engineer. No additional cementitious materials, such as blended hydraulic cement, performance hydraulic cement, fly ash, GGBFS, or others, shall be added to or as a replacement for Portland cement when used with silica fume in the production of concrete.

The State Materials Engineer shall be notified in writing of the nature, amount and identity of any processing, or other additions made to the silica fume during production.

907-714.07.2.2--Source Approval. The approval of each silica fume source shall be on a case by case basis as determined by the State Materials Engineer. In order to obtain approval of a silica fume source, the Producer/Suppliers shall submit to the State Materials Engineer the following for review: certified test reports, made by an acceptable, independent laboratory regularly inspected by the Cement and Concrete Reference Laboratory of the National Institutes of Standards and Technology, which show that the silica fume meets all the requirements of AASHTO Designation: M307, Table 3, including the Sulfate resistance expansion, listed in the table for Optional Physical Requirements, and other requirements listed herein.

In order to demonstrate effectiveness in contributing to sulfate resistance, included in this test data shall be results of silica fume from the proposed source tested in accordance with ASTM Designation: C 1012. There shall be two sets of test specimens per the following:

a. One set of test specimens shall be prepared using a Type I Portland cement meeting the requirements of AASHTO Designation: M85 and having a tricalcium aluminate (C_3A) content of more than 8.0%,

b. One set of test specimens shall be prepared using a Type II Portland cement meeting the requirements of AASHTO Designation: M85.

c. The proposed silica fume shall be incorporated at the rate of 8% cement replacement in each set of test specimens and shall meet both of the acceptance criteria listed below for source approval.

The requirement for acceptance of the test sample using Type I Portland cement is an expansion of 0.10% or less at the end of six months. The requirement for acceptance of the test sample using Type II Portland cement is an expansion of 0.05% or less at the end of six months.

907-714.07.2.3--Storage. The Contractor shall provide suitable means for storing and protecting the silica fume against dampness and contamination. Silica fume which has become partially set, caked, or contains lumps shall not be used.

907-714.07.2.4--Acceptance. With each new lot of material shipped, the Contractor shall submit to the State Materials Engineer a certified test report from the manufacturer showing that the material meets the Chemical and Physical Requirements of AASHTO Designation: M307.

The Department reserves the right to sample, for check tests, any shipment or lot of silica fume delivered to a project.

Delete Subsection 714.11.6 on pages 690 and 691, and substitute the following.

907-714.11.6--Rapid Setting Cementitious Patching Compounds for Concrete Repair. Rapid setting concrete patching compounds must be approved for listing in the Department's "Approved Sources of Materials" prior to use. Upon approval, a product must be recertified every four (4) years to remain on the "Approved Sources of Materials" list. Each product shall be pre-measured and packaged dry by the manufacturer. All liquid solutions included by the manufacturer as components of the packaged material shall be packaged in a watertight container. The manufacturer may include aggregates in the packaged material or recommend the addition of Contractor furnished aggregates.

The type, size and quantity of aggregates, if any, to be added at the job site shall be in accordance with the manufacturer's recommendations and shall meet the requirements of Subsection 703.02 for fine aggregate and Subsection 703.03 for coarse aggregate. Required mixing water to be added at the job site shall meet the requirements of Subsection 714.01.2.

Only those bonding agents, if any, recommended by the manufacturer of the grout or patching compounds may be used for increasing the bond to old concrete or mortar surfaces.

Patching compounds containing soluble chlorides will not be permitted when in contact with steel.

Site preparation, proportioning of materials, mixing, placing and curing shall be performed in accordance with the manufacturer's recommendation for the specific type of application, and the Contractor shall furnish a copy of these recommendations to the Engineer.

Rapid setting cementitious concrete patching compounds, including components to be added at the job site, shall conform to the following physical requirements:

Non-shrink cementitious grouts shall not be permitted for use.

Compressive strength shall equal or exceed 3000 psi in 24 hours in accordance with ASTM C 928 for Type R2 concrete or mortar.

Bond strength shall equal or exceed 1000 psi in 24 hours in accordance with ASTM C 928 for Type R2 concrete or mortar.

The material shall have a maximum length change of ±0.15% in accordance with ASTM C 928 for Type R2 concrete or mortar.

The Contractor shall furnish to the Engineer three copies of the manufacturer's certified test report(s) showing results of all required tests and certification that the material meets the specifications when mixed and place in accordance with the manufacturer's instructions. When the mixture is to be placed in contact with steel, the certification shall further state that the packaged material contains no chlorides. Certified test report(s) and certification shall be furnished for each lot in a shipment.

The proportioning of materials must be approved by the State Materials Engineer and any subsequent change in proportioning must also be approved. A sample of each component shall be submitted to the Engineer along with the quantity or percentage of each to be blended. At least 45 days must be allowed for initial approval.

The proportioning of materials for subsequent lots may be approved by the State Materials Engineer upon receipt of certification from the manufacturer that the new lot of material is the same composition as that originally approved by the Department and that the material has not been changed or altered in any way.

907-714.11.7--Commercial Grout for Anchoring Doweled Tie Bars in Concrete. Before Subsection 714.11.7.1 on page 691, add the following.

Approved Non-"Fast Set" Epoxy anchor systems as specified below may be used for the repair of concrete pavements that do not involve permanent sustained tension applications or overhead applications.

"***Fast Set Epoxy***" may not be used for any Adhesive Anchor Applications. Adhesive Anchor Systems (Fast Set epoxy or otherwise) shall not be used for permanent sustained tension applications or overhead applications. "Fast Set Epoxy" refers to an epoxy produced by the Sika Corporation called Sikadur AnchorFix-3 and repackaged for sale under a variety of names/companies listed at the Federal Highway Administration web site at the following link:

http://www.fhwa.dot.gov/Bridge/adhesives.cfm

907-714.11.7.4--Acceptance Procedure. After the last sentence of the first paragraph of Subsection 714.11.4 on page 691, add the following.

Upon approval, a product must be recertified every four (4) years to remain on the "Approved Sources of Materials" list.

907-714.11.8--Epoxy Joint Repair System.

907-714.11.8.1--General. After the last sentence of the first paragraph of Subsection 714.11.8.1 on page 692, add the following.

Upon approval, a product must be recertified every four (4) years to remain on the "Approved Sources of Materials" list.

MISSISSIPPI DEPARTMENT OF TRANSPORTATION

SPECIAL PROVISION NO. 907-715-4 **CODE: (IS)**

DATE: 05/01/2013

SUBJECT: Roadside Development Materials

Section 715, Roadside Development Materials, of the 2004 Edition of the Mississippi Standard Specifications for Road and Bridge Construction is hereby amended as follows.

907-715-02.2.1--Agricultural Limestone. Delete the first sentence of Subsection 715-02.2.1 on page 704 and substitute the following.

Agricultural limestone shall be either a hard-rock limestone material or a marl or chalk agricultural liming material as addressed in the latest amendment to the Mississippi Agricultural Liming Material Act of 1993, published by the Mississippi Department of Agriculture and Commerce.

907-715.02.2.1.1--Screening Requirements. Delete the first sentence of Subsection 715.02.2.1.1 on page 704.

Delete Subsection 715.02.2.1.2 on page 704 and substitute the following.

907-715-02.2.1.2--Calcium Carbonate Equivalent. Marl or chalk liming material shall not have less than 70% calcium and magnesium carbonate calculated as calcium carbonate equivalent when expressed on a dry weight basis.

907-715-02.2.1.3--Neutralizing Values. Hard-rock limestone material shall have a minimum Relative Neutralizing Value (RNV) of 63.0%, which is determined as follows.

% RNV = CCE x (% passing #10 mesh + % passing #50 mesh)/2

Where: CCE = Calcium Carbonate Equivalent

907-715.03--Seed.

907-715.03.2--Germination and Purity Requirements. Add the following to Table B on page 705.

Name (Kind)	Name (Variety)	Percent Germination	Percent Purity
GRASSES			
Rye Grass	Annual	80	98
Wheat	-	80	98

MISSISSIPPI DEPARTMENT OF TRANSPORTATION

SPECIAL PROVISION NO. 907-720-2 **CODE: (IS)**

DATE: **05/01/2013**

SUBJECT: **Pavement Marking Materials**

Section 720, Pavement Marking Materials, of the 2004 Edition of the Mississippi Standard Specifications for Road and Bridge Construction is hereby amended as follows.

907-720.01--Glass Beads. After the first sentence of Subsection 720.01 on page 729, add the following.

The glass beads shall contain no more than 200 ppm (mg/kg) total concentration for lead, arsenic, or antimony. The manufacture shall furnish the Engineer with a certified test report indicating that the glass beads meet the above requirement.

907-720.02--Thermoplastic Pavement Markings. Delete the first paragraph of Subsection 720.02 on page 730 and substitute the following.

The thermoplastic material shall be lead free and conform to AASHTO Designation: M 249 except the glass beads shall be moisture resistant coated.

After the first sentence of the second paragraph of Subsection 720.02 on page 730, add the following.

In addition, the certification for the thermoplastic material shall state that the material is lead free.

MISSISSIPPI DEPARTMENT OF TRANSPORTATION

SPECIAL PROVISION NO. 907-723-2 **CODE: (SP)**

DATE: 8/10/2015

SUBJECT: Light Emitting Diode (LED) Luminaires

Section 723, Lighting Assemblies, of the 2004 Edition of the Mississippi Standard Specifications for Road and Bridge Construction as amended by this special provision is applicable for Light Emitting Diode (LED) Luminaire Systems Only.

After Subsection 723.08.9 on page 799, add the following.

907-723.09--Light Emitting Diode (LED) Luminaires. When called for on the plans LED luminaires may be used in any lighting assembly. LED luminaires must meet the following general requirements and any special requirements noted on the plans.

907-723.09.1--Housing. The luminaire housing shall be a low-profile, die-cast aluminum housing, grey powder-coat finish, minimum 3-mil thickness. The housing shall have wide angular channels that allow for natural removal of dirt and debris. The housing shall have a hinged door with tool-less entry. Luminaire weight and projected area must be within design loading limits as shown on the plans. The housing shall be UL 8750 and UL 1598 compliant, vibration tested to 3G per ANSI C136.31. The housing must be NRTL listed for wet locations.

907-723.09.2--Optical Requirements. The luminaire shall have a completely sealed optical system for the luminaire housing and shall have an International Electrotechnical Commission (IEC) International Protection marking (IP) code of 66 or greater. The luminaire shall have a light distribution pattern at the road surface that has an evenly dispersed appearance and shall provide the Illuminating Engineering Society (IES) pattern as identified on the plans.

907-723.09.3--Mounting. The luminaire shall have provisions for a 2-bolt slip fitter type mounting on nominal 2-inch (2 3/8" OD) pipe (arm) brackets. The mounting shall have a clamping assembly with two (2) bolts for securing the assembly to the light pole. There shall be an area on the top of the housing to allow for a level to be used for proper orientation of the luminaire. For a vertical (tenon) bracket, it shall have provisions for a 2-inch (2 3/8" OD) vertical tenon. It shall attach to the tenon with set screws.

907-723.09.4--Labeling Marking. Permanent labels must be placed inside the luminaire indicating NRTL listing. The luminaire shall have an external label per ANSI C136.15. The luminaire shall have an internal label per ANSI C136.22. An internal label or marking with date code of when fixture was manufactured shall be provided.

907-723.09.5--Electrical. The luminaire shall be rated for operating at ambient temperature between -40 and +40°C. The luminaire shall use Class I LED drivers and the drivers shall have a minimum power factor of 90%. The luminaire shall have a terminal block for connecting pole

wiring to the luminaire. The power supply and other components shall have a quick disconnect wiring harness for ease of maintenance. Drivers and other electrical components must be NRTL listed for wet locations.

907-723.09.6--Documentation. The following documentation must be available upon request or submitted for approval:

- Luminaire specification sheet
- LED driver specification sheet
- LM-79 Luminaire photometric report. The vendor must submit LM-79 in-situ test data to confirm thermal operating temperatures of the luminaire
- LM-80 Lumen maintenance report
- TM-21 calculations
- Backlight, Uplight, Glare (BUG) rating of the luminaire
- Computer generated point by point photometric analysis
- Written product warranty
- Independent test lab IES photometric reports including; IES electronic file, IES chromaticity data from an LED Lighting Facts approved testing laboratory
- Instructions for installation and maintenance.

907-723.09.7--Chromaticity. The luminaire shall meet the following Chromaticity requirements.

- The standard color for the LED Luminaire shall be white.
- The colors shall conform to the following color regions based on the 1931 CIE chromaticity diagram.
- Nominal Correlated Color Temperature (CCT) = 4000K ±500K.
- The luminaire shall have a minimum Color Rendering Index (CRI) of 70.
- Chromaticity as stated above must be confirmed by an Independent test lab or shown on the LM-79 test report.

907-723.09.8--Surge Protection. The luminaire shall have a surge protection device (SPD), in addition to driver's internal protection, to withstand repetitive noise transients from utility line switching, nearby lightning strikes, and other interference.

Documentation shall be provided that shows the following:

- The SPD will protect the luminaire from common mode transient peak voltages up to 10 kV (minimum) and transient peak currents up to 5 kA (minimum).
- The SPD conforms to UL 1449, 3rd Edition, and has been tested in accordance with ANSI/IEEE C62.41.2 Scenario I Location Category C with modified test levels of 10kV/5kA Combination Wave for Line-Ground, Line-Neutral and Neutral-Ground.
- The SPD is listed or recognized by a NRTL to UL 1449, 3rd Edition.
- The SPD component in series with the line will stop current to the fixture in the event of SPD failure.

907-723.09.9--Rating. The fixture shall be rated for a minimum lamp efficiency of 70% lumen output at 75,000 hours at 25°C.

907-723.09.10--Warranty. The entire luminaire assembly, including material, finish, workmanship, power supply, LED modules and lumen maintenance, shall have a minimum of 5-year warranty from the date of installation. The fixture shall be determined to be defective if greater than 10% of the LEDs fail. A finish warranty shall include deterioration such as blistering, cracking, peeling, fading, or corrosion defects for a period of five (5) years.

MISSISSIPPI DEPARTMENT OF TRANSPORTATION

SPECIAL PROVISION NO. 907-804-19 **CODE: (SP)**

DATE: **11/10/2015**

SUBJECT: **Concrete Bridges and Structures**

Section 804, Concrete Bridges and Structures, of the 2004 Edition of the Mississippi Standard Specifications for Road and Bridge Construction is hereby deleted and replaced as follows.

SECTION 907-804--CONCRETE BRIDGES AND STRUCTURES

907-804.01--Description. This work consists of constructing concrete bridges and structures in accordance with these specifications and in reasonably close conformity with the dimensions, designs, lines, and grades indicated on the plans or established.

Construction of box bridges shall be in accordance with Sections 601 and 602.

907-804.02--Materials.

907-804.02.1--General. Concrete produced and controlled from this specification shall be accepted upon proper certification of concrete production through an approved quality control program and verification by job site acceptance criteria. The Contractor shall develop and implement a quality control program which shall be used to maintain the required properties of concrete. For projects with 1000 cubic yards and more, quality control and acceptance shall be achieved through statistical evaluation of test results. For projects of more than 200 but less than 1000 cubic yards, quality control and acceptance shall be achieved by individual test results. For projects less than or equal to 200 cubic yards, refer to the requirements of TMD-20-05-00-000 "Sampling and Testing of Small Quantities of Miscellaneous Materials" for mixture design and testing requirements.

The materials for concrete bridges and structures, when sampled and tested in accordance with Subsection 700.03, shall meet the requirements of the following Subsections:

Portland Cement ..... 701.01 and 701.02
Blended Cement ..... 907-701.01 and 907-701.04
Admixtures 713.02
Fly Ash 714.05
Ground Granulated Blast Furnace Slag (GGBFS) 907-714.06
Silica Fume 907-714.07.2
Water ..... 714.01.1 and 714.01.2
Fine Aggregate 703.02
Coarse Aggregate 703.03
Lightweight Aggregate 907-703.19
Curing Materials 713.01

Joint Materials ..... 707.01, 707.02, and 707.07
Structural Steel Joints and Bearing Devices 717.01
Bearing Pads 714.10
Wire Rope or Wire Cable for Prestressed Concrete ..... 700.01 and 711.03
Sprayed Finish for Concrete Surface 714.12
Reinforcing Steel 711.02

907-804.02.2--Use, Care, and Handling. The use, care, and handling of materials shall conform to the applicable requirements of Subsection 501.03.10 and the specific requirements of Subsections 907-804.02.4 and 907-804.02.5. Unless otherwise authorized, only fine aggregate or coarse aggregate of one type and from the same source shall be used in the construction of any one unit of a structure. Should the Contractor, with written permission of the Engineer, elect to substitute high early strength cement for cement of the type specified, the Contractor will not receive additional compensation for the substitution.

907-804.02.3--Blank.

907-804.02.4--Care and Storage of Concrete Aggregates. The handling and storage of aggregates shall be such as to prevent segregation or contamination with foreign materials. The Engineer may require that aggregates be stored on separate platforms at satisfactory locations.

When specified, coarse aggregates shall be separated into two or more sizes in order to secure greater uniformity of the concrete mixture. Different sizes of aggregate shall be stored in separate stock piles sufficiently removed from each other to prevent the material at the edges of the piles from becoming intermixed.

907-804.02.5--Storage of Cementitious Materials. All cementitious materials shall be stored in suitable weather-proof buildings or bins. These buildings or bins shall be placed in locations approved by the Engineer. Provision for storage shall be ample, and the shipments of cementitious materials as received shall be stored separately or other provisions made to the satisfaction of the Engineer for easy access for the identification, inspection, and sampling of each shipment as deemed desirable. Stored cementitious materials shall meet the test requirements at any time after storage when a retest is ordered by the Engineer.

On small jobs, open storage consisting of a raised platform and ample waterproof covering may be permitted by written authorization from the Engineer.

When specified, the Contractor shall keep accurate records of deliveries of cementitious materials and of their use in the work. Copies of these records shall be supplied in the form required by the Engineer.

907-804.02.6--Classification and Uses of Concrete. When a specific class of concrete is not specified on the plans or in the contract documents, the structure or parts thereof shall be constructed with the class of concrete as directed by the Engineer.

The classes and their uses are as follows:

(1) Class AA - Concrete for bridge construction and concrete exposed to seawater.
(2) Class A - Concrete shown as Class A shall herein be classified as and required to meet the performance criteria of Class AA.
(3) Class B - General use, heavily reinforced sections, cast-in-place concrete piles, and conventional concrete piles.
(4) Class C - Massive sections or lightly reinforced sections.
(5) Class D - Massive unreinforced sections and riprap.
(6) Class F - Concrete for prestressed members.
(7) Class FX - Extra strength concrete for prestressed members, as shown on plans.
(8) Class S - For all seal concrete deposited under water.
(9) Class DS - Drilled Shaft

907-804.02.7--Blank.

907-804.02.8--Laboratory Accreditation. The Contractor shall be responsible for furnishing the laboratory used to perform concrete quality control tests. The laboratory may be the Contractor's facility, the concrete producer's facility, or a certified independent testing laboratory.

Only laboratories certified by the Mississippi Department of Transportation are qualified to perform material testing. Certification by AASHTO Accreditation Program (AAP) will be acceptable if the laboratory is listed in the latest AAP publication and maintains accreditation to completion of concrete work.

The Contractor's laboratory designated for quality control testing shall have equipment necessary to test aggregates and concrete for the test methods listed in Table 1.

Table 1

AASHTO: R 39	Making and Curing Concrete Test Specimens in the Laboratory
AASHTO: R 60	Sampling Freshly Mixed Concrete
AASHTO: T 2	Sampling Aggregates
AASHTO: T 19	Bulk Density ("Unit Weight") and Voids in Aggregates
AASHTO: T 22	Compressive Strength of Cylindrical Concrete Specimens
AASHTO: T 23	Making and Curing Concrete Test Specimens in the Field
AASHTO: T 27	Sieve Analysis of Fine and Coarse Aggregates
AASHTO: T 84	Specific Gravity and Absorption of Fine Aggregate
AASHTO: T 85	Specific Gravity and Absorption of Coarse Aggregate
AASHTO: T 119	Slump of Hydraulic Cement Concrete
AASHTO: T 121	Density (Unit Weight), Yield, and Air Content (Gravimetric) of Concrete
AASHTO: T 152	Air Content of Freshly Mixed Concrete by Pressure Method *
AASHTO: T 196	Air Content of Freshly Mixed Concrete by the Volumetric Method *
AASHTO: T 231	Capping Cylindrical Concrete Specimens
AASHTO: T 248	Reducing Field Samples of Aggregate to Testing Size
AASHTO: T 255	Total Evaporable Moisture Content of Aggregate by Drying

AASHTO: T 325	Standard Method of Test for Estimating the Strength of Concrete in Transportation Construction by Maturity Tests **
ASTM: C 1064	Standard Test Method for Temperature of Freshly Mixed Hydraulic Cement Concrete
ASTM: C 1074	Standard Practice for Estimating Concrete Strength by the Maturity Method **

* Equipment necessary for either pressure or volumetric air content.
** Equipment necessary for estimating concrete strength following the maturity method.

Testing equipment shall have been inspected by the Department or through the AASHTO Accreditation Program. Testing equipment calibration files shall be made available upon request by the Department.

907-804.02.9--Testing Personnel. Technicians testing portland cement concrete, for either acceptance or production control purposes, shall be certified by an accepted certification program. Recertification is required for each Class after five years. Certification requirements are listed in Table 2.

Table 2

Concrete Technician's Tasks	Test Method Required	Certification Required**
Sampling or Testing of Plastic Concrete	AASHTO Designation: R 60, T 23, T 119, T 121, T 152, T 196, and ASTM Designation: C 1064	MDOT Class I certification
Compressive Strength Testing of Concrete Cylinders	AASHTO Designation: T 22 and T 231	MDOT Concrete Strength Testing Technician certification
Sampling of Aggregates	AASHTO Designation: T 2	Work under the supervision of a MDOT Class II certified technician
Testing of Aggregates	AASHTO Designation: T 19, T 27, T 84, T 85, T 248, and T 255	MDOT Class II certification
Proportioning of Concrete Mixtures*	AASHTO Designation: M 157 and R 39	MDOT Class III certification
Interpretation and Application of Maturity Meter Readings	AASHTO Designation: T 325 and ASTM Designation: C 1074	MDOT Class III certification or Two hours maturity method training

* Technicians making concrete test specimens for meeting the requirements of Subsection 907-804.02.10.1.2 shall be MDOT Class I certified and under the direct supervision of an MDOT Class III certified technician.

** MDOT Class I certification encompasses the same test procedures and specifications as ACI Concrete Field Testing Technician-Grade I. MDOT Class II certification encompasses the same test procedures and specifications as ACI Aggregate Testing Technician-Level 1. MDOT Concrete Strength Testing Technician encompasses the same test procedures and specifications as ACI Concrete Strength Testing certification.

Specific requirements for each level of certification are in the latest edition of the Department's *Concrete Field Manual*. Current MDOT Class I, MDOT Class II, and/or MDOT Class III certifications shall be acceptable until those certifications expire. Upon expiration of a current certification, recertification with the certifications listed in Table 2 shall be required. Technicians performing either specific gravity testing of aggregates or compressive strength tests shall be required to either:

- have the required MDOT certification listed in Table 2, or
- have a current MDOT Class III certification or work under the direct supervision of current MDOT Class III technician, and have demonstrated the specific gravity and/or compressive strength test during the inspection of laboratory equipment by the Materials Division, Concrete Section.

907-804.02.10--Portland Cement Concrete Mixture Design. At least 10 days prior to production of concrete, the Contractor shall submit to the Engineer proposed concrete mixture designs complying with the Department's *Concrete Field Manual*. Materials shall be from approved sources meeting the requirements of the Standard Specifications. Proportions for the mixture designs shall be for the class concrete required by the contract plans and shall meet the requirements of the "Master Proportion Table for Structural Concrete Design" listed in Table 3. The concrete producer shall assign a permanent unique mixture number to each mixture design. Each mixture design shall be field verified as required in Subsection 907-804.02.10.3. Acceptable field verification data shall be required for final approval of a mixture design.

All concrete mixture designs will be reviewed by the Materials Division prior to use. Concrete mixture designs disapproved will be returned to the Contractor with a statement explaining the disapproval.

If the Contractor chooses to cure the concrete in accordance with the requirements listed under **Length of Time Defined by Development of Compressive Strength** in Subsection 907-804.03.17, the compressive strength/maturity relationship shall be developed for the mixture design for a minimum of 28 days following the requirements of Subsection 907-804.03.15. The compressive strength/maturity relationship information shall be submitted with the mixture design information.

Table 3
MASTER PROPORTION TABLE FOR STRUCTURAL CONCRETE DESIGN

Class	Coarse Aggregate Size No.*	Maximum Water/ Cementitious** Ratio	Specified Compressive Strength (f'_c) psi	Maximum Permitted Slump*** inches	Nominal Total Air Content**** %
AA*****	57 or 67	0.45**	4000	3***	4.5****
B	57 or 67	0.50	3500	4	4.5
C	57 or 67	0.55	3000	4	4.5
D	57 or 67	0.70	2000	4	4.5
F	67	0.40	5000	3	******
FX	67	(As per mixture design)	(As shown on plans)	3	******
S	57 or 67	0.45	3000	8	4.5
DS	67	0.45	4000	***	******

* Maximum size aggregate shall conform to the concrete mixture design for the specified aggregate. Other smaller coarse aggregate sizes meeting the requirements of Subsection 907-703.03.2.4 may also be used in conjunction with the coarse aggregate sizes listed. Lightweight aggregate (LWA) meeting the requirements of Subsection 907-703.19.2 may also be used as a partial replacement for fine aggregate.

** The replacement limits of portland cement by weight by other cementitious materials (such as fly ash, GGBFS, silica fume, or others) shall be in accordance with the values in Subsection 907-701.02. Other hydraulic cements may be used in accordance with the specifications listed in Section 701.

For Class AA concrete for concrete bridge decks, the water / cementitious ratio range shall be 0.43 – 0.45 and the maximum cementitious material content shall be 550 pounds per cubic yard. The "maximum cementitious material content" refers to the total weight of Portland cement, blended hydraulic cement, GGBFS, silica fume, and fly ash.

*** Unless otherwise specified, minus slump requirements shall meet those set forth in Table 3 of AASHTO Designation: M157.

For Class AA concrete for concrete bridge decks the maximum permitted slump may be increased to five (5) inches. Also, for each additional pound of fibers per cubic yard added in excess of the requirement in Note *****, an additional inch of slump will be allowed up to a maximum permitted slump of eight (8) inches.

For Class AA not used in bridge decks and all other Classes of concrete, the maximum permitted slump may be increased to eight (8) inches.

For Class DS concrete for drilled shafts the slump range shall be 8 inches ±1 inch.

**** The tolerance on total air content shall be ±1.5%. For Class AA concrete for concrete bridge decks, the nominal total air content may be increased to 6.5%.

***** For Class AA concrete for concrete bridge decks, an approved synthetic structural fiber meeting the requirements of Special Provision 907-711, Synthetic Structural Fiber Reinforcement, shall be incorporated into the mixture at 1.25 times the approved dosage rate.

****** Entrained air is not required except for concrete exposed to seawater. For concrete not exposed to seawater, the total air content shall not exceed 6.0%. For concrete exposed to seawater, the nominal total air content shall be 4.5%.

At least one water-reducing admixture or water-reducing/set-retarding admixture shall be used in all classes of concrete in accordance with the manufacturer's recommended dosage range. Admixtures providing a specific performance characteristic other than those of water reduction or set retardation may be used in accordance with the manufacturer's recommended dosage range. Mixture designs containing accelerating admixtures will not be approved. Any combinations of admixtures shall be approved by the Engineer before their use.

907-804.02.10.1--Proportioning of Portland Cement Concrete Mixture Design. Proportioning of portland cement concrete shall be based on an existing mixture of which the producer has field experience and documentation or based on a recently batched laboratory mixture tested according to the required specifications.

907-804.02.10.1.1--Proportioning on the Basis of Previous Field Experience of Trial Mixtures. Where a concrete production facility has a record, based on at least 10 consecutive strength tests from at least 10 different batches within the past 12 months from a mixture not previously used on Department projects, the standard deviation shall be calculated. The record of tests from which the standard deviation is calculated shall:

a) Represent similar materials and conditions to those expected. Changes in materials and proportions within the test record shall not have been more closely restricted than those for the proposed work.

b) Represent concrete produced to meet a specified strength.

c) Consist of 10 consecutive tests, average of two cylinders per test, tested at 28 days.

The standard deviation, s , shall be calculated as:

$$s = \left[\sum \left(X_i - \overline{X}\right)^2 \div \left(N - 1\right)\right]^{1/2}$$

where:

X_i = the strength result of an individual test
$\overline{X}$ = the average of individual tests in the series
N = number of tests in the series

When the concrete production facility does not have a record of tests for calculation of standard deviation, as required in the above formula, the requirements of Subsection 907-804.02.10.1.2 shall govern.

The required average compressive strength (f'_{cr}) used as the basis for selection of concrete proportions shall conform to the inequality listed below, while using a standard deviation, s, calculated as shown above.

$$\overline{X} \geq f'_{cr}$$

where:

$$f'_{cr} = f'_c + 1.43s$$

where:

f'_c = specified compressive strength of concrete, psi
f'_{cr} = required average compressive strength of concrete, psi
s = standard deviation, psi

1.43 represents the Lower Quality Index necessary to assure that 93% of compressive strength tests are above f'_c.

907-804.02.10.1.2--Proportioning on the Basis of Laboratory Trial Mixtures. When an acceptable record of field test results is not available, concrete proportions shall be established based on laboratory trial mixtures meeting the following restrictions:

a) The combination of materials shall be those intended for use in the proposed work.

b) Trial mixtures having proportions and consistencies suitable for the proposed work shall be made using the ACI 211.1 as a guide to proportion the mixture design.

c) Trial mixtures shall be designed to produce a slump within ±3/4 inch of the maximum permitted, and for air-entrained concrete, ±0.5 percent of the maximum total air content. The temperature of freshly mixed concrete in trial mixtures shall be reported.

d) For each proposed mixture, at least three compressive test cylinders shall be made and cured in accordance with AASHTO Designation: R 39. Each change of water-cement ratio shall be considered a new mixture. The cylinders shall be tested for strength in accordance with AASHTO Designation: T 22 and shall be tested at 28 days.

e) The required average strength of laboratory trial mixes shall exceed f'_c by 1200 psi for concrete mixture designs less than 5000 psi and by 1400 psi for concrete mixture designs of 5000 psi or more.

f) The laboratory trial batch mixtures shall have been made within the previous 12 months before being submitted for approval and shall not have been previously used on Department projects.

907-804.02.10.2--Documentation of Average Strength. Documentation that the proposed concrete proportions will produce an average strength equal to or greater than the required average shall consist of the strength test records from field tests or results from laboratory trial mixtures.

907-804.02.10.3--Field Verification of Concrete Mixture Design. Concrete mixture designs will only be tentatively approved pending field verification. The requirements for yield, slump, or total air content shall be successfully met within the first three (3) production days. Mixture designs may be transferred to other projects without additional field verification testing, once the mixture design has passed the field verification process.

The Contractor's Certified Quality Control Technicians shall test each concrete mixture design upon the first placement of the mix. Aggregates and concrete tests during the first placement shall be as follows.

Aggregates	Concrete
Bulk Specific Gravity	Water Content
Moisture	Slump
Gradation	Air Content
	Unit Weight
	Yield

For all Classes of concrete, the mixture shall be verified to yield within 2.0% of the correct volume when all the mix water is added to the batch.

For all Classes of concrete other than DS, F, and FX, the mixture shall produce a slump within a minus 1½-inch tolerance of the maximum permitted for mixtures with a maximum permitted slump of three inches (3") or less or within a minus 2½-inch tolerance of the maximum permitted for mixtures with a maximum permitted slump of greater than three inches (3"), and producing a total air content within a minus 1½ percent tolerance of the maximum allowable air content in Table 3.

For Class DS, the slump shall be within the requirements in Note *** below Table 3. For Class DS exposed to seawater, the total air content shall be within a minus 1½ percent tolerance of the maximum allowable air content in Note ****** below Table 3. For Class DS not exposed to seawater the total air content shall be within the requirements in Note ****** below Table 3.

For Classes F and FX, the slump shall be within a minus 1½-inch tolerance of the maximum permitted for mixtures with a maximum permitted slump of three inches (3") or less or within a minus 2½-inch tolerance of the maximum permitted for mixtures with a maximum permitted slump of greater than three inches (3"). For Classes F and FX exposed to seawater, the total air content shall be within a minus 1½ percent tolerance of the maximum allowable air content in

Note ****** below Table 3. For Classes F and FX not exposed to seawater the total air content shall be within the requirements in Note ****** below Table 3.

The mixture shall be adjusted and retested, if necessary, on subsequent placements until the above mentioned properties are met.

If the requirements for yield, slump, or total air content are not met within the first three (3) production days, subsequent field verification testing shall not be permitted on Department projects, and the mixture design shall not be used until the requirements listed above are met. Any mixture design adjustments, changes in the mixture proportions, are to be made by a Class III Certified Technician representing the Contractor. After the mixture design has been verified and adjustments made, verification test results will be reviewed by the Engineer.

907-804.02.10.3.1--Slump Retention of Class DS Concrete Mixture Designs. Prior to concrete placement, the Contractor shall provide test results of a slump loss test using approved methods to demonstrate that the mixture meets the four hour requirement in Subsection 907-803.02.7.1. These tests shall be conducted successfully by an approved testing laboratory within 30 days prior to installation of the trial shaft, with personnel from the Materials Division present. The slump loss test shall be conducted at temperatures and conditions similar to those expected at the job site at the time of the installation of the trial shaft. The sample for the slump loss test shall be from a minimum batch size of four (4) cubic yards of concrete. If the time between the previous successful slump loss test and the installation of the trial shaft exceeds 30 days, another successful slump loss test shall be performed on the first truckload of concrete as part of the installation of the trial shaft. This requirement limiting the time between the previous slump loss test and an installation of the trial shaft also applies to Class DS concrete mixture designs being transferred from another project. During any shaft installation a slump loss test shall be conducted by the Contractor at the direction of the Engineer from the concrete at the site for verification of slump loss requirements using a sample from a minimum batch size of four cubic yards of concrete.

907-804.02.10.4--Adjustments of Mixtures. The mixture design may be adjusted by the Class III Certified Technician representing the Contractor in accordance with the allowable revisions listed in the Department's *Concrete Field Manual*, paragraph 5.7. Written notification shall be submitted to the Engineer a minimum of seven (7) days prior to any source or brand of material change, aggregate size change, allowable material type change, or decrease in any cementitious material content. Any adjustments of the concrete mixture design shall necessitate repeat of field verification procedure as described in Subsection 907-804.02.10.3 and approval by the Engineer.

907-804.02.11--Concrete Batch Plants. The concrete batch plant shall meet the requirements of the National Ready Mixed Concrete Association *Quality Control Manual, Section 3, Plant Certification Checklist* as outlined in the latest edition of the Department's *Concrete Field Manual*. The Contractor shall submit a copy of the approved checklist along with proof of calibration of batching equipment, i.e., scales, water meter, and admixture dispenser, to the Engineer 30 days prior to the production of concrete.

For projects with 1000 cubic yards and more, the concrete batch plant shall meet the requirements for an automatic system capable of recording batch weights. It shall also have automatic moisture

compensation for the fine aggregate. For projects of more than 200 but less than 1000 cubic yards the plant can be equipped for manual batching with a fine aggregate moisture meter visible to the plant operator.

The concrete batch plant shall have available adequate facilities to cool concrete during hot weather.

Mixer trucks to be used on the project are to be listed in the checklist and shall meet the requirements of the checklist.

907-804.02.12--Contractor's Quality Control. The Contractor shall provide and maintain a quality control program that will provide reasonable assurance that all materials and products submitted to the Department for acceptance will conform to the contract requirements, whether manufactured or processed by the Contractor or procured from suppliers, subcontractors, or vendors.

The Contractor's Quality Control program shall implement the minimum quality control requirements shown in Table 4, "CONTRACTOR'S MINIMUM REQUIREMENTS FOR QUALITY CONTROL". The quality control activities shown in the table are considered to be normal activities necessary to control the production and placing of a given product or material at an acceptable quality level. To facilitate the Department's activities, all completed gradation samples shall be retained for a maximum of sixty (60) days by the Contractor until further disposition is designated by the Department.

The Contractor shall perform, or have performed, the tests required to substantiate product conformance to contract document requirements and shall also perform, or have performed, all tests otherwise required.

The Contractor's Quality Control program shall encompass the requirements of AASHTO Designation: M 157 into concrete production and control, equipment requirements, testing, and batch ticket information. The requirement of AASHTO Designation: M 157, Section 11.7 shall be followed except, on arrival to the job site, a maximum of 1½ gallons per cubic yard shall be allowed to be added. Water shall not be added at a later time. Job site adjustment of a batch using chemical admixtures or the mechanical adjustment of a batch may be performed by the Contractor if the requirements of Subsection 907-804.02.12.1.1 have been satisfactorily addressed in the Quality Control Plan. If either the maximum permitted slump is exceeded or the total air content is not within the required range after all adjustments are made at the job site, the concrete shall be rejected.

The Contractor's quality control tests shall be documented and shall be available for review by the Engineer throughout the life of the contract.

As set out in these specifications, quality control sampling and testing performed by the Contractor will be used by the Department for determination of acceptability of the concrete.

The Contractor shall maintain standard equipment and qualified personnel as required to assure conformance to contract requirements.

907-804.02.12.1--Quality Control Plan. The Contractor shall prepare a Quality Control Plan which shall identify the personnel responsible for the Contractor's quality control including the company official who will act as liaison with Department personnel. The Quality Control Plan shall be submitted in writing to the Engineer for approval 30 days prior to the production of concrete.

The class(es) of concrete involved will be listed separately. If an existing mixture design(s) is to be used, the mixture design number(s) as previously approved shall be listed.

It is intended that sampling and testing be in accordance with standard methods and procedures, and that measuring and testing equipment be standard and properly calibrated. If alternative sampling methods and procedures, and inspection equipment are to be used, they shall be detailed in the Quality Control Plan.

907-804.02.12.1.1--Elements of Plan. The Plan shall address all elements that affect the quality of the structural concrete including, but not limited to, the following items:

1) Stockpile Management
2) Procedures for Corrective Actions for Non Compliance of Specifications
3) Procedure for Controlling Concrete Temperatures
4) Job Site Batch Adjustments by Addition of Chemical Admixtures:

   The Plan shall address if the Contractor intends to adjust either the slump and/or total air content of a batch on the job site by adding chemical admixture(s) to a batch. The Contractor shall include the names of the personnel designated to perform this batch adjustment, the equipment used to add the chemical admixture(s), and the procedure by which the batch adjustment will be accomplished. Only the Contractor's designated personnel shall adjust a batch. Only calibrated dispensing equipment shall be used to add chemical admixture(s) to a batch. Only the procedure described in this section of the Plan shall be utilized.

   If either the maximum permitted slump is exceeded or the total air content is not within the required range after all adjustments are made at the job site, the concrete shall be rejected.

   If the Contractor elects to utilize Job Site Batch Adjustments by Addition of Chemical Admixture within Item 2, Procedures for Corrective Actions for Non Compliance of Specifications, to adjust batches which do not meet the minimum specification requirements for slump and/or total air content, no more than three batches on any one project shall be allowed to be adjusted regardless of the number of mixtures associated with the project.

5) Construction of Concrete Bridge Decks, including the following:

- the description of the equipment used for placing concrete on the bridge deck in accordance with Subsection 907-804.03.6 and, as applicable, Subsections 907-804.03.7 and 907-804.03.8 including any accessories added to the pump to ensure the entrained air in the concrete mixture remains entrained during pumping and depositing of the concrete mixture,
- the description of and the number of pieces of equipment used to consolidate the concrete in accordance with Subsection 907-804.03.6.2,
- the description of the equipment used to finish the bridge deck in accordance with Subsection 907-804.03.19.7,
- the plan for ensuring a continuous rate of finishing the bridge deck without delaying the application of curing materials within the time specified in Subsection 907-804.03.17, including ensuring a continuous supply of concrete throughout the placement with an adequate quantity of concrete to complete the deck and filling diaphragms and end walls in advance of deck placement,
- the plan for applying the curing materials within the time specified in Subsection 907-804.03.17,
- the description of the powered fogging equipment in accordance with Subsection 907-804.03.17,
- a sample of the documentation used as the daily inspection report for ensuring maintenance of the continuous wet curing in accordance with Subsection 907-804.03.17, as required,
- the description of the equipment used to apply the liquid membrane, including but not limited to, the nozzles, pumping/pressurization equipment, and liquid membrane tanks, in accordance with Subsection 907-804.03.17,
- the method for determining the rate of applied liquid membrane meets the application rate requirements in accordance with Subsection 907-804.03.17,
- a sample of the documentation used for the application rate verification of the liquid membrane in accordance with Subsection 907-804.03.17.

6) Mechanical Adjustment of Trucks

907-804.02.12.2--Personnel Requirements. The Contractor's Designated Certified Technician shall perform and use quality control tests and other quality control practices to assure that delivered materials and proportioning meet the requirements of the mixture design including temperature, slump, air content, and strength and shall periodically inspect all equipment used in transporting, proportioning, and mixing.

The Contractor's Designated Technician shall periodically inspect all equipment used placing, consolidating, finishing, and curing to assure it is operating properly and that placement, consolidation, finishing, and curing conform to the mixture design and other contract requirements.

907-804.02.12.3--Documentation. The Contractor shall maintain adequate records of all inspections and tests. The records shall indicate the nature and number of observations made, the number and type of deficiencies found, date and time of samples taken, the quantities approved and rejected, and the nature of corrective action taken as appropriate. The Contractor's

documentation procedures will be subject to approval of the Department prior to the start of the work and to compliance checks during the progress of the work.

All conforming and non-conforming results shall be kept complete and shall be available at all times to the Department during the performance of the work. Forms shall be on a computer-acceptable medium. Batch tickets and gradation data shall be documented in accordance with Department requirements.

Batch tickets shall contain all the information in AASHTO Designation: M157, Section 16 including the additional information in Subsection 16.2 with the following exception: the information listed in paragraphs 16.2.7 and 16.2.8 is not required. All material added to a batch by both the batch plant or added manually shall be documented on the ticket. Batch tickets shall also contain the concrete producer's permanent unique mixture number assigned to the concrete mixture design. Copies shall be submitted to the Department as the work progresses.

Test data for portland cement concrete, including gradation, shall be charted in accordance with the applicable requirements.

The Contractor may use additional control charts as deemed appropriate. It is normally expected that testing and charting will be completed within 24 hours after sampling.

All records documenting the Contractor's quality control tests shall become the property of the Department upon completion of the work.

907-804.02.12.4--Corrective Action. The Contractor shall take prompt action to correct conditions that have resulted, or could result, in the submission to the Department of materials and products that do not conform to the requirements of the contract documents. All corrective actions shall be documented.

907-804.02.12.5--Non-Conforming Materials. The Contractor shall establish and maintain an effective and positive system for controlling non-conforming material, including procedures for its identification, isolation and disposition. Reclaiming or reworking of non-conforming materials shall be in accordance with procedures acceptable to the Department.

All non-conforming materials and products shall be positively identified to prevent use, shipment, and intermingling with conforming materials and products. Holding areas, mutually agreeable to the Department and the Contractor, shall be provided by the Contractor.

TABLE 4
CONTRACTOR'S MINIMUM REQUIREMENTS FOR QUALITY CONTROL

Portland Cement Concrete		
Control Requirement	**Frequency**	**AASHTO/ASTM Designation**
A. PLANT AND TRUCKS		
1. Mixer Blades	Monthly	
2. Scales		
a. Tared	Daily	
b. Calibrate	Every 6 months	
c. Check Calibration	Weekly	
3. Gauges & Meters - Plant & Truck		
a. Calibrate	Every 6 months	
b. Check Calibration	Weekly	
4. Admixture Dispenser		
a. Calibrate	Every 6 months	
b. Check Operation & Calibration	Daily	
B. AGGREGATES		
1. Sampling		T 2
2. Fine Aggregate		
a. Gradation / FM	250 yd^3 concrete	T 27
b. Moisture	Check meter against test results weekly 2500 yd^3 concrete	T 255
c. Specific Gravity / Absorption		T 84
3. Coarse Aggregates		
a. Gradation	250 yd^3 concrete	T 27
b. Moisture	Minimum of once daily or more as needed to control production. Check meter against test results weekly.	T 255
c. Specific Gravity / Absorption	2500 yd^3 Concrete	T 85
C. PLASTIC CONCRETE		
1. Sampling		T 141
2. Air Content	First load then one per 50 yd^3	T 152 or T 196
3. Slump	First load then one per 50 yd^3	T 119
4. Compressive Strength	A minimum of one set (three cylinders) for each 100 yd^3 inclusive and one set for each additional 100 yd^3 or fraction thereof for each class concrete delivered and placed on a calendar day from a single supplier. A test shall be the average of three cylinders.	T 22, T 23, T 231
5. Yield	Each 400 yd^3	T 121
6. Temperature	With each sample	C 1064

907-804.02.13--Quality Assurance Sampling and Testing. Quality Assurance (QA) inspection and testing will be provided by the Department to assure that the Contractor's Quality Control (QC) testing meets the requirements of these specifications.

Acceptance of the material is based on the inspection of the construction, monitoring of the Contractor's QC program, QC and QA test results per Subsection 907-804.02.13.1, and the comparison of the QA test results with the QC test results. The Department may use the results of the Contractor's QC tests as a part of the acceptance procedures instead of the results of QA tests, provided:

a) The Department's inspection and monitoring activities indicate that the Contractor is following the approved QC program and, respectively,
b) For aggregates, the results from the Contractor's QC and the Department's QA testing of aggregate gradations compare by both meeting the aggregate type's gradation requirements;
c) For concrete, the Contractor's QC and Department's QA testing of concrete compressive strengths compare when using the data comparison computer program with an alpha value of 0.01 for projects with 1000 cubic yards and more; or, strength comparisons are within 990 psi for projects of more than 200 but less than 1000 cubic yards.

The minimum frequency for QA testing of aggregate and plastic concrete by the Department will follow the frequencies listed in Table 5, **"**DEPARTMENT'S MINIMUM REQUIREMENTS FOR QUALITY ASSURANCE".

TABLE 5
DEPARTMENT'S MINIMUM REQUIREMENTS FOR QUALITY ASSURANCE

Quality Assurance Tests	Frequency	AASHTO/ASTM Designation
A. AGGREGATES		
1. Sampling		T 2
2. Fine Aggregate Gradation and FM	250 yd^3 concrete	T 27
3. Coarse Aggregates Gradation	250 yd^3 concrete	T 27
B. PLASTIC CONCRETE		
1. Sampling		T 141
2. Air Content	Every 100 yd^3	T 152 or T 196
3. Slump	Every 100 yd^3	T 119
4. Compressive Strength	One set (three cylinders) for every 100 yd^3 inclusive. A test shall be the average of three cylinders.	T 22, T 23, T 231
5. Temperature	With each sample	C 1064

Periodic inspection by the Department of the Contractor's QC testing and production will continue through the duration of the project. Weekly reviews will be made of the Contractor's QC records and charts.

For aggregates, comparison of data of the Contractor's QC aggregate gradation test results to those of the Department's QA aggregate gradation test results will be made monthly during concrete

production periods according to Department Standard Operating Procedures. When it is determined that the Contractor's QC test results of aggregate gradations are comparative to that of the Department's QA test results, then the Department will use the Contractor's QC results as a basis for acceptance of the aggregates and the Department's QA testing frequency of aggregates may be reduced to a frequency of no less than three QA tests to every 10 QC tests. If the Contractor's QC aggregate gradation test results fail to compare to those of the Department's QA aggregate gradation test results, Department testing for aggregate gradations will revert to the frequency shown in Table 5 for aggregates until the Contractor's and Department's aggregate gradation test data compare.

For concrete compressive strength, comparison of data of the Contractor's QC compressive strength test results to those of the Department's QA compressive strength test results will be made monthly during concrete production periods according to Department's *Concrete Field Manual*. When it is determined that the Contractor's QC test results of concrete compressive strengths are comparative to that of the Department's QA test results, then the Department will use the Contractor's QC results as a basis for acceptance of the concrete and the Department's QA testing frequency of concrete compressive strengths may be reduced to a frequency of no less than three QA tests to every 10 QC tests. If the Contractor's QC compressive strength test results fail to compare to those of the Department's QA compressive strength test results, Department testing will revert to the frequency shown in Table 5 for plastic concrete until the Contractor's and Department's compressive strength test data compare.

907-804.02.13.1--Job Control Testing.

907-804.02.13.1.1--Sampling. Sampling of concrete mixture shall be performed in accordance with the latest edition of the Department's *Concrete Field Manual*.

907-804.02.13.1.2--Slump. Slump of plastic concrete shall meet the requirements of Table 3: MASTER PROPORTION TABLE FOR STRUCTURAL CONCRETE DESIGN. A check test shall be made on another portion of the sample before rejection of any load.

907-804.02.13.1.3--Air. Total air content of concrete shall be within the specified range for the class of concrete listed in Table 3: MASTER PROPORTION TABLE FOR STRUCTURAL CONCRETE DESIGN. A check test shall be made on another portion of the sample before rejection of any load.

907-804.02.13.1.4--Yield. If the yield of the concrete mix design is more than plus or minus three percent (±3%) of the designed volume, the mix shall be adjusted by a Class III Certified Technician representing the Contractor to yield the correct volume plus or minus three percent (±3%). If batching of the proportions of the mixture design varies outside the batching tolerance range of the originally approved proportions by more than the tolerances allowed in Subsection 907-804.02.12, the new proportions shall be field verified per Subsection 907-804.02.10.3.

907-804.02.13.1.5--Temperature. Cold weather concreting shall follow the requirements of Subsection 907-804.03.16.1. Hot weather concreting shall follow the requirements of Subsection

907-804.03.16.2. Concrete with a temperature more than the maximum allowable temperature shall be rejected and not used in Department work.

The maximum acceptance temperature for Class DS concrete mixtures is 95°F.

The maximum acceptance temperature of Class C concrete mixtures is 100°F for mixtures meeting the cement replacement requirements of Subsection 907-701.02.2. For Class C concrete mixtures that do not meet the cement replacement requirements of Subsection 907-701.02.2, the maximum acceptance temperature is 95°F.

The maximum acceptance temperature for all other concrete mixtures meeting the cement replacement requirements of Subsection 907-701.02.2 is 95°F. The maximum acceptance temperature for all other concrete mixtures which do not meet the cement replacement requirements of Subsection 907-701.02.2 is 90°F.

907-804.02.13.1.6--Compressive Strength. Standard cured concrete compressive strength tests shall conform to the specified strength (f'_c) listed in the specifications. Concrete represented by compressive strength test below the specified strength (f'_c) may be removed and replaced by the Contractor. If the Contractor elects not to remove the material, it will be evaluated by the Department as to the adequacy for the use intended. All concrete evaluated as unsatisfactory for the intended use shall be removed and replaced by the Contractor at no additional cost to the Department. For concrete allowed to remain in place, reduction in payment will be as follows:

Projects with 1000 Cubic Yards and More. When the evaluation indicates that the work may remain in place, a statistical analysis will be made of the QC and QA concrete test results. If this statistical analysis indicates at least 93% of the material would be expected to have a compressive strength equal to or greater than the specified strength (f'_c) and 99.87% of the material would be expected to have a compressive strength at least one standard deviation above the allowable design stress (f_c), the work will be accepted. If the statistical analysis indicates that either of the two criteria are not met, the Engineer will provide for an adjustment in pay as follows for the material represented by the test result.

Total Pay on Material in Question = Unit Price - (Unit Price x % Reduction)

$$\text{\% Reduction} = \frac{\left(f'_c - X\right)}{f'_c - \left(f_c + s\right)} \times 100 \text{ x M}$$

where:

f'_c = Specified 28-day compressive strength, psi
X = Individual compressive strength below f'_c, psi
s = standard deviation, psi*
f_c = allowable design stress, psi
M = pay reduction multiplier, per the *Concrete Field Manual*, paragraph 7.3

* Standard deviation used in the above reduction of pay formula shall be calculated from the applicable preceding compressive strengths test results plus the individual compressive strength below f'_c. If below f'_c strengths occur during the project's first ten compressive strength tests, the standard deviation shall be calculated from the first ten compressive strength tests results.

Projects of More Than 200 but Less Than 1000 Cubic Yards. When the evaluation indicates that the work may remain in place, a percent reduction in pay will be assessed based on a comparison of the deficient 28-day test result to the specified strength. The Engineer will provide for an adjustment in pay as follows for the material represented by the test result.

Total Pay on Material in Question = Unit Price - (Unit Price x % Reduction)

$$\% \text{ Reduction} = \frac{\left(f'_c - X\right)}{f'_c} \times 100 \text{ x M}$$

where:

$f'c$ = Specified 28-day compressive strength, psi
X = Individual compressive strength below f'c, psi
M = pay reduction multiplier, per the *Concrete Field Manual*, paragraph 7.3

907-804.02.14--Dispute Resolution. Disputes over variations between Contractor's QC test results and the Department's QA test results shall be resolved at the lowest possible level using the latest edition of the Department's *Concrete Field Manual*. When there are significant discrepancies between the QC test results and the QA test results, the Contractor's QC Manager, the Project Engineer, and/or the District Materials Engineer shall look for differences in the procedures, and correct the inappropriate procedure before requesting a third party resolution.

If the dispute cannot be resolved at the project or District level, the Department's Materials Division will serve as a third party to resolve the dispute. The Materials Division's decision shall be binding.

The Contractor shall be responsible for the cost associated with the third party resolution if the final decision is such that the Department's QA test results were correct. Likewise, the Department will be responsible for the cost when the final decision is such that the Contractor's QC test results were correct.

907-804.03--Construction Requirements.

907-804.03.1--Measurement of Materials.

907-804.03.1.1--General. The accuracy for measuring materials shall be in accordance with AASHTO Designation: M 157.

907-804.03.1.2--Measurement by Weighing. Except when otherwise specified or authorized, the materials shall be measured by weighing. The apparatus provided for weighing materials shall be

suitably designed and constructed for this purpose. Cementitious materials and aggregates shall be weighed separately. Cement in standard bags need not be weighed, but bulk cement and other cementitious materials shall be weighed. The mixing water shall be measured by volume or by weight. All measuring devices shall be subject to approval.

907-804.03.2--Blank.

907-804.03.3--Blank.

907-804.03.4--Hand Mixing. Hand mixing of concrete will not be allowed.

907-804.03.5--Delivery. The plant supplying concrete shall have sufficient capacity and transporting apparatus to ensure continuous delivery at the rate required. The rate of delivery shall be such as to provide for the proper continuity in handling, placing, and furnishing of the concrete. The rate shall be such that the interval between batches shall not exceed 20 minutes. The methods of delivering and handling the concrete shall be that which will facilitate placing with minimum re-handling and without damage to the structure or the concrete.

907-804.03.6--Handling and Placing Concrete.

907-804.03.6.1--General. Prior to placing concrete, all reinforcement shall have been accurately placed in the position shown on the plans and fastened as set out in Section 805. All sawdust, chips, and other construction debris and extraneous matter shall have been removed from the interior of the forms. Temporary struts, braces, and stays holding the forms in correct shape and alignment shall be removed when the concrete placing has reached an elevation rendering their service unnecessary. These temporary members shall be entirely removed from the forms and shall not be buried in the concrete.

No concrete shall be placed until the forms and reinforcement have been inspected.

Except as provided for truck mixers and truck agitators, concrete shall be placed in the forms within 30 minutes after the time that the cement is first added to the mixture.

Concrete shall be placed so as to avoid segregation of materials and displacement of reinforcement. The use of troughs, chutes, and pipes over 25 feet in length for gravity conveyance of concrete to the forms, will not be permitted except when authorized by the Engineer and subject to the production of quality concrete.

Only approved mechanical conveyors will be permitted.

Open troughs and chutes shall be metal or metal lined. The use of aluminum pipes, chutes, or other devices made of aluminum that come into direct contact with the concrete shall not be used. Where steep slopes are required, the chutes shall be equipped with baffles or be in short sections that change the direction of movement.

All chutes, troughs, and pipes shall be kept clean and free from coatings of hardened concrete by thoroughly flushing with water after each run. Water used for flushing shall be discharged clear of the structure.

When placing operations involve dropping the concrete more than five feet, it shall be deposited through sheet metal or other approved pipes to prevent segregation and unnecessary splashing. The pipes shall be made in sections to permit discharging and raising as the placement progresses. A non-jointed pipe may be used if sufficient openings of the proper size are provided to allow for the flow of the concrete into the shaft. As far as practicable, the pipes shall be kept full of concrete during placing, and their ends shall be kept buried in the newly placed concrete.

Except as herein provided, concrete shall be placed in horizontal layers not more than 12 inches thick. When, with the Engineer's approval, less than the complete length of a layer is placed in one operation, it shall be terminated in a vertical bulkhead. Each layer shall be placed and compacted before the preceding layer has taken its initial set and shall be compacted so as to avoid the formation of a construction joint with the preceding layer.

If the Department determines that there is an excessive number of projections, swells, ridges, depressions, waves, voids, holes, honeycombs, or other defects in the completed structure, removal of the entire structure may be required as set out in Subsection 105.12.

907-804.03.6.2--Consolidation. Immediately after depositing the concrete mixture, the concrete mixture shall be thoroughly consolidated by the use of approved mechanical vibrators and suitable spading tools. Only concrete mixture which has not achieved initial set shall be consolidated. Hand spading alone will be permitted on small structural members such as railing, small culvert headwalls, and as necessary to ensure smooth surfaces and dense concrete along form surfaces, in corners, and in locations impossible to reach with vibrators. When hand spading is used for consolidation, a sufficient number of workmen with spading tools shall be provided. For hand spading, flush a thin layer of mortar to all the surfaces and thoroughly and satisfactorily consolidate the concrete.

The Contractor shall conduct operations of depositing and consolidating the concrete mixture such that the operation produces concrete which is uniformly smooth and dense, having no honeycombing or pockets of segregated aggregate.

Movement of personnel through the consolidated concrete shall not be permitted. If it is determined it is necessary to step into previously consolidated concrete, the concrete in the stepped into area shall be consolidated again.

907-804.03.6.2.1--Requirements for Vibrators. Mechanical vibrators shall be subject to the following:

1. To verify compliance with these requirements, the Contractor shall provide the Engineer with a copy of the manufacturer's specifications for each type and brand of vibrator used on the project.

2. The Contractor shall provide a sufficient number of personnel with vibrators to properly consolidate each batch immediately after the concrete is placed in the forms. The Contractor shall provide at least one stand-by vibrator and required power source.
3. Concrete having been consolidated shall not be walked in or through. If it is determined it is necessary to step into previously consolidated concrete, the concrete in the stepped into area shall be consolidated again.
4. Internal vibrators shall be of the spud or tube type, meeting the following characteristics and performance:
    a. The diameter of the head of the vibrator shall be 1¼ to 2½ inches.
    b. The frequency of vibration shall be 8000 to 12000 vibrations per minute (Hz) while operating in the concrete.
    c. The average amplitude shall be 0.025 to 0.05 inch while operating in air.
    d. The minimum radius of influence shall be seven (7) inches.
    e. The length of the vibrator head shall be nearly equal to the depth of the layer of concrete placed.
5. When the reinforcing steel is coated with epoxy, internal vibrators with heads of rubber or other resilient material shall be used. Rubber covers securely fastened over steel heads shall be acceptable.
6. For consolidation of concrete used in concrete bridge decks, the following additional requirements shall apply:
    a. Only internal vibration shall be used.
    b. Internal vibrators shall all be of the same type and size.
    c. The configuration of the internal vibrators shall meet the requirements of Subsection 907-804.03.6.2.3.

907-804.03.6.2.2--Operation of Internal Vibration. Mechanical vibrators used for internal vibration shall be operated as follows:

1. Vibrators shall not be dragged or moved laterally through the concrete to transport concrete. Vibrators shall not be used in such a manner that the concrete segregates or forms pockets of grout. Vibrators shall not be applied directly or through the reinforcement to sections or layers of concrete which have taken initial set.
2. Vibrators shall only be inserted into the concrete while operating and at the point of placement to consolidate the concrete for such a length of time that there is a general cessation in the escape of large entrapped air bubbles at the surface.
3. Vibrators shall be inserted slowly into the concrete and allowed to penetrate into the concrete under their own weight.
4. Vibrators shall be inserted into the concrete while they are in a vertical position with enough flexibility to work themselves around the reinforcing steel.
5. The head of the vibrator shall be completely submerged in the concrete for a time of consolidation between 3 and 15 seconds prior to removal, unless otherwise defined by the Engineer.
6. For consolidation of two or more layers of concrete, the vibrator shall be inserted into the bottom most layer at least six (6) inches. The vibrator shall be manipulated in a series of up-and-down motions to knit the layers together.

7. Vibrators shall be removed slowly from the concrete after the consolidation has been accomplished. However, once the head of the vibrator has become only partially immersed in the concrete, vibrators shall be removed rapidly.
8. The insertions of the vibrators shall be systematically spaced such that the entire surface of the concrete comes under the influence of the vibrator during consolidation. This includes areas around the reinforcing steel, imbedded fixtures, the corners and angles of forms, and any irregular areas. The distance between insertions shall not exceed 1.5 times the radius of influence such that the area visibly affected by the vibrator overlaps the adjacent, just-vibrated area.
9. For additional information, refer to ACI 309-07, Chapter 7, Sections 7.1 through 7.3

907-804.03.6.2.3--Method of Consolidation. It is anticipated the Contractor will accomplish consolidation by internal vibration using one of the following two methods: vibrators mounted on a mechanical device or an orchestrated effort utilizing personnel. Regardless of the chosen method, the method shall be included in the QCP in accordance with Subsection 907-804.02.12.1.1.5 and shall only receive tentative approval until the method is demonstrated as effectively meeting the requirements of Subsection 907-804.03.6.2.

907-804.03.6.3--Discontinuance of Placing. When placing is temporarily discontinued, the concrete, after becoming firm enough to retain its form, shall be cleaned of laitance and other objectionable material to a sufficient depth to expose sound concrete. To avoid visible joints insofar as possible upon exposed faces, the top surface of the concrete adjacent to the forms shall be smoothed with a trowel. Where a "feather edge" might be produced at a construction joint, such as in the sloped top surface of a wing wall, an inset form work shall be used in the preceding layer to produce a blocked out portion that will provide an edge thickness of at least six inches (6") in the succeeding layer. Work shall not be discontinued within 18 inches of the top of any face unless provision has been made for a coping less than 18 inches thick. In this case and if permitted by the Engineer, the construction joint may be made at the underside of the coping.

Immediately following the discontinuance of placing concrete, all accumulations of mortar splashed on the reinforcement and the surface of forms shall be removed. Dried mortar chips and dust shall not be puddled into the unset concrete. If the accumulations are not removed prior to the concrete becoming set, care shall be exercised not to break or injure the concrete-steel bond at and near the surface of the concrete while cleaning the reinforcement. After initial set the forms shall not be jarred, and no strain shall be placed on the ends of projecting reinforcement until the concrete has sufficiently set to ensure against any damage by such jarring or strain.

907-804.03.6.4--Placing Bridge Concrete. The method and sequence of placing concrete shall conform to the provisions and requirements set forth for the particular type of construction.

907-804.03.6.4.1--Foundations and Substructures. Concrete seals shall be placed in accordance with Subsection 907-804.03.9. All other concrete for foundations shall be poured in the dry unless otherwise stipulated or authorization is given in writing by the Engineer to do otherwise. Concrete shall not be placed in foundations until the foundation area has been inspected and approved.

Unless otherwise specified, the placement of concrete in the substructure shall be in accordance with the general requirements of Subsection 907-804.03.6.

Unless otherwise directed, concrete in columns shall be placed in one continuous operation, and shall be allowed to set at least 12 hours before the caps are placed.

907-804.03.6.4.2--Superstructure. For simple spans, concrete shall preferably be deposited by beginning at the center of the span and working toward the ends. For continuous spans, concrete shall be deposited as shown on the plans. Concrete in girders shall be uniformly deposited for the full length of the girder and brought up evenly in horizontal layers. Concrete in areas below the bridge deck but being deposited at the same time as concrete for the bridge deck, like a diaphragm, shall be placed and consolidated sufficiently ahead of placing the concrete for the bridge deck such that the placing, consolidating, finishing, and curing of concrete for the bridge deck shall not be impeded or slowed.

Unless otherwise permitted by the Engineer, concrete shall not be placed in the superstructure until the column forms have been stripped sufficiently to determine the character of the concrete in the columns. Unless otherwise permitted by the Engineer, the load of the superstructure shall not be placed on pile bents until the caps have been in place at least seven (7) days and shall not be placed on other types of bents until the bents have been in place at least 14 days.

In placing concrete around steel shapes, it shall be placed on one side of the shape until it flushes up over the bottom flange of the shape on the opposite side, after which it shall be placed on both sides to completion.

Concrete in girder haunches less than three feet (3') in height shall be placed at the same time as that in the girder stem. Whenever a haunch or fillet has a height of three feet (3') or more at the abutment or columns, the haunch and the girder shall be poured in three successive stages: first, up to the lower side of the haunch; second, to the lower side of the girder; and third, to completion.

Except when intermediate construction joints are specified, concrete in slab, T-beam, or deck-girder spans shall be placed in one continuous operation for each span.

The floors and girders of through-girder superstructures shall be placed in one continuous operation unless otherwise specified, in which case special shear anchorage shall be provided to ensure monolithic action between girder and floor.

Concrete in box girders shall be placed as shown on the plans.

Concrete shall not be chuted directly into the forms of the span and shall be placed continuously with sufficient speed to be monolithic and to allow for finishing before initial set.

907-804.03.6.4.3--Bridge Deck. When using the Transverse Method in accordance with Subsection 907-804.03.19.7.3, the period of time between concrete placement and completion of the final curing shall be kept to a minimum, as directed by the Engineer.

907-804.03.7--Pneumatic Placing. Pneumatic placing of concrete will be permitted only if specified in the contract or if authorized by the Engineer. The equipment shall be so arranged that no vibrations result which might damage freshly placed concrete.

Where concrete is conveyed and placed by pneumatic means the equipment shall be suitable in kind and adequate in capacity for the work. The machine shall be located as close as practicable to the place of deposit. The position of the discharge end of the line shall not be more than 10 feet from the point of deposit. The discharge lines shall be horizontal or inclined upwards from the machine. At the conclusion of placement the entire equipment shall be thoroughly cleaned.

907-804.03.8--Pumping Concrete. Placement of concrete by pumping will be permitted only if specified in the contract or if authorized in writing by the Engineer. If used, the equipment shall be arranged so that no vibrations result which might damage freshly placed concrete.

Where concrete mixture is conveyed and placed by mechanically applied pressure (pumping), the equipment shall be suitable in kind and adequate in capacity for the work. The Contractor shall select concrete mixture proportions such that the concrete mixture is pumpable and placeable with the selected equipment.

The pumping equipment shall be thoroughly cleaned prior to concrete placement. Excess form release agent shall be removed from the concrete pump hopper. The Contractor shall prime the pump at no additional cost to the Department by pumping and discarding enough concrete mixture to produce a uniform mixture exiting the pump. At least 0.25 cubic yard of concrete mixture shall be pumped and discarded to prime the pump. Only concrete mixture shall be added directly into the concrete pump hopper after placement has commenced. If anything other than concrete mixture is added to the concrete pump hopper, all concrete mixture in the concrete pump hopper and pump line shall be discarded and the pump re-primed at no additional cost to the Department.

The discharge end of the pump shall be of such a configuration that the concrete does not move in the pump line under its own weight. The intent of this requirement is to ensure that entrained air in the concrete mixture remains entrained during pumping and depositing the concrete mixture. This shall be accomplished with one or both of the following:

- a minimum 10-foot flexible hose attached to the discharge end of a steel reducer having a minimum length of three (3) feet and a minimum reduction in area of 20% which is attached to the discharge end of the pump line, or
- a flexible reducing hose to the discharge end of the pumpline with a minimum reduction in area of 20% over a minimum 10-foot hose length.

Regardless of the configuration chosen, the Contractor shall ensure that the concrete is pumped and does not free-fall more than five (5) feet within the entire length of pump line and after discharge from the end of pump line.

The Contractor shall not have any type of metal elbow, metal pipe, or other metal fitting within five (5) feet of any person during discharge of concrete mixture.

Boom pumps shall have a current Concrete Pump Manufacturers Association's ASME/ANSI B30.27 certification. Equipment added to the boom and pump line shall meet the pump manufacturer's specifications and shall not exceed the manufacturer's maximum recommended weight limit for equipment added to the boom and pump line.

The operation of the pump shall be such that a continuous stream of concrete without air pockets is produced. When pumping is completed, the concrete remaining in the pipe line, if it is to be used, shall be ejected in such a manner that there will be no contamination of the concrete or separation of the ingredients. After this operation, the entire equipment shall be thoroughly cleaned.

The use of aluminum pipe as a conveyance for the concrete will not be permitted.

907-804.03.9--Depositing Concrete Under Water. Concrete shall not be deposited in water except with the approval of the Engineer.

Concrete deposited under water shall be Class S.

Concrete deposited under water shall be carefully placed in a compact mass in its final position by means of a tremie, a bottom dump bucket, or other approved method and shall not be disturbed after being deposited. Special care shall be exercised to maintain still water at the point of deposit. No concrete shall be placed in running water and all form work designed to retain concrete under water shall be water-tight. The consistency of the concrete shall be carefully regulated, and special care shall be exercised to prevent segregation of materials.

Concrete seals shall be placed continuously from start to finish, and the surface of the concrete shall be kept as nearly horizontal as practicable at all times. To ensure thorough bonding, each succeeding layer of a seal shall be placed before the preceding layer has taken initial set.

When a tremie is used, it shall consist of a tube having a diameter of at least 10 inches and constructed in sections having flanged couplings fitted with gaskets. The means of supporting the tremie shall be such as to permit the free movement of the discharge over the entire top surface of the work and to permit it to be lowered rapidly when necessary to choke off or retard the flow of concrete. The discharge end shall be closed at the start of the work so as to prevent water entering the tube and shall be entirely sealed. The tremie tube shall be kept full to the bottom of the hopper. When a batch is dumped into the hopper, the flow of concrete shall be induced by slightly raising the discharge end, always keeping it in the deposited concrete. The flow is then stopped by lowering the tremie. The flow shall be continuous until the work is completed.

Depositing of concrete by the drop bottom bucket method shall conform to the following: The top of the bucket shall be open. The bottom doors shall open freely downward and outward when tripped. The bucket shall be completely filled and slowly lowered to avoid backwash. It shall not be dumped until it rests on the surface upon which the concrete is to be deposited and when discharged shall be withdrawn slowly until well above the concrete.

Dewatering may proceed when the concrete seal is sufficiently hard and strong. As a general rule, this time will be 48 hours for concrete made with high-early-strength cement and three days for concrete made with other types of cement. All laitance and other unsatisfactory material shall be removed from the exposed surface by scraping, chipping, or other means which will not injure the surface of the concrete.

907-804.03.10--Construction Joints.

907-804.03.10.1--General. Unless otherwise approved by the Engineer, construction joints shall be made only where located on the plans or shown in the pouring schedule. If not detailed on the plans, or in the case of emergency, construction joints shall be placed as directed by the Engineer. Shear keys or inclined reinforcement shall be used where necessary to transmit shear or to bond the two sections together.

For continuous spans, bridge deck concrete shall be deposited as shown on the plans. Deviation from the pouring schedule shown in the plans is not permitted.

907-804.03.10.2--Bonding. Before depositing new concrete on or against concrete which has hardened, the forms shall be retightened. The surface of the hardened concrete shall be roughened as required by the Engineer and in a manner that will not leave loosened particles of aggregate or damaged concrete at the surface. It shall be thoroughly cleaned of foreign matter and laitance and saturated with water. When directed by the Engineer, the cleaned and saturated surfaces, including vertical and inclined surfaces, shall first be thoroughly covered with a coating of mortar or neat cement grout against which the new concrete shall be placed before the grout has attained its initial set.

The placing of concrete shall be carried continuously from joint to joint. The face edges of all joints which are exposed to view shall be carefully finished, true to line and elevation.

In order to bond successive courses suitable depressed or raised keys of the designated size shall be constructed. Raised keys shall be monolithic with the concrete of the lower course.

907-804.03.11--Concrete Exposed to Seawater. Unless otherwise specifically provided, concrete for structures exposed to seawater shall be Class AA concrete as referenced in Subsection 907-804.02.10. The clear distance from the face of the concrete to the nearest face of reinforcing steel shall be at least four inches. The mixing time and the water content shall be carefully controlled and regulated so as to produce concrete of maximum impermeability. The concrete shall be thoroughly compacted, and stone pockets shall be avoided. No construction joints shall be formed between the levels of extreme low water and extreme high water as determined by the Engineer. Between these levels, seawater shall not come in direct contact with the new concrete until at least 30 days have elapsed. The surface concrete as left by the forms shall be left undisturbed.

907-804.03.12--Blank.

907-804.03.13--Falsework. The Contractor shall submit to the Engineer four copies of structural design analysis and detail drawings, which show the method of falsework or centering. These designs and detail plans shall be prepared and bear the seal of a Registered Professional Engineer with experience in falsework design.

Falsework plans shall include falsework elevations together with all other dimensions and details which is considered necessary for the construction. Other pertinent data needed is size and spacing of all falsework members and minimum bearing requirements for false piles.

Upon completion of falsework erection, the Registered Professional Engineer shall certify that the erected falsework is capable of supporting the load for construction.

Falsework piling shall be spaced and driven so that the bearing value of each pile is sufficient to support the load that will be imposed upon it. The bearing value of the piles should be calculated according to the appropriate formula given in Section 803.

For designing falsework and centering, a weight of 150 pounds per cubic foot shall be assumed for green concrete. All falsework shall be designed and constructed to provide the necessary rigidity and to support the loads without appreciable settlement or deformation. The Contractor may be required to employ screw jacks or hardwood wedges to take up slight settlement in the falsework either before or during the placing of concrete. An allowance shall be made for anticipated compressibility of falsework and for the placement of shims, wedges, or jacks to produce the permanent structural camber shown on the plans. If during construction, any weakness develops and the falsework shows any undue settlement or distortion, the work shall be stopped, the part of the structure affected removed, and the falsework strengthened before work is resumed. Falsework which cannot be founded on a satisfactory footing shall be supported on piling, which shall be spaced, driven, and removed, as referenced in Subsection 907-804.03.15, in a manner approved by the Engineer.

All structures built across a public street or highway on which maintenance of traffic is required, shall have falsework so arranged that a vertical clearance of at least 12' 6" is provided. Unless otherwise specified, a horizontal clearance of at least the width of the traveled way shall be provided at all times. If the vertical clearance is less than 13' 6" or the horizontal clearance is less than the full crown width of the roadway, the Contractor shall install and maintain appropriate safety devices, clearance signs and warning lights, and shall notify the Engineer sufficiently in advance of restricting the clearance for the Engineer to advise both the Traffic Engineering and the Maintenance Divisions. All traffic control and safety devices shall be in accordance with the Manual on Uniform Traffic Control Devices (MUTCD).

907-804.03.14--Forms.

907-804.03.14.1--General. Forms shall be wood, metal, or other material approved by the Engineer. All forms shall be built mortar-tight and sufficiently rigid to prevent distortion due to pressure of the concrete and other loads incident to the construction operations. Forms shall be constructed and maintained so as to prevent warping and the opening of joints due to shrinkage. The forms shall be substantial and unyielding and shall be so designed that the finished concrete

will conform to the proper dimensions and contours. The design of the forms shall take into account the effect of vibration of concrete as it is placed.

Minimum requirements for slab overhang forms shall be 3/4-inch plywood supported on 2-inch x 6-inch S4S wood timbers placed flatwise on 16-inch centers.

Adjustable brackets for support of slab overhang forms shall be spaced at a maximum distance of 3' 0" center to center unless specifically approved otherwise. Grade points for forms shall coincide with the location of the adjustable form brackets.

Forms for surfaces exposed to view shall be of uniform thickness with a smooth inside surface of an approved type. Joints in forms for exposed surfaces shall be closely fitted to eliminate fins, stone pockets, or other variations in the surface of the concrete which would mar a smooth and uniform texture.

Forms shall be filleted at all sharp corners and shall be given a bevel or draft in the case of all projections, such as girders and copings, to ensure easy removal.

Metal ties or anchorages within the forms shall be so constructed as to permit their removal, without injury to the concrete, to a depth of at least the reinforcing steel clearance shown on the plans. In case ordinary wire ties are permitted, all wires, upon removal of the forms, shall be cut back at least 1/4 inch from the face of the concrete with chisels or nippers. Nippers shall be used for green concrete. All fittings for metal ties shall be designed so that upon their removal the cavities which are left will be the smallest practicable size. The cavities shall be filled with cement mortar and the surface left sound, smooth, even, and uniform in color.

Forms shall be set and maintained to the lines designated until the concrete is sufficiently cured for form removal. Forms shall remain in place for periods which shall be determined as hereinafter specified. If forms are deemed to be unsatisfactory in any way, either before or during the placing of concrete, the Engineer will order the work stopped until the defects have been corrected.

The shape, strength, rigidity, water-tightness, and surface smoothness of reused forms shall be maintained at all times. Warped or bulged lumber shall be resized before being reused. Forms which are unsatisfactory in any respect shall not be reused.

Access to the lower portions of forms for narrow walls and columns shall be provided for cleaning out extraneous material immediately before placing the concrete.

All forms shall be treated with an approved oil or saturated with water immediately before placing the concrete. For rail members or other members with exposed faces, the forms shall be treated only with an approved oil to prevent the adherence of concrete. Any material which will adhere to or discolor the concrete shall not be used.

When metal forms are used they shall be kept free from rust, grease, or other foreign matter which will discolor the concrete. They shall be of sufficient thickness and so connected that they will remain true to shape and line, and shall conform in all respects as herein prescribed for mortar

tightness, filleted corners, beveled projections, etc. They shall be constructed so as to ensure easy removal without injury to concrete. All inside bolt and rivet heads shall be countersunk.

All chamfer strips shall be dressed, straight, and of uniform width and shall be maintained as such at all times.

907-804.03.14.2--Stay-In-Place Metal Forms. Stay-in-place (SIP) metal forms are corrugated metal sheets permanently installed between the supporting superstructure members. After the concrete has cured, these forms shall remain in place as permanent, non-structural members of the bridge.

Pay quantities for deck concrete will be computed from the dimensions shown in the Contract Plans with no allowance for changes in deflection and /or changes in dimensions necessary to accommodate the SIP metal forms.

There will be no direct payment for the cost of the forms and form supports, or any material, tools, equipment, or labor incidental thereto, but the cost shall be considered absorbed in the contract unit price for concrete.

Before fabricating any material, three (3) complete sets of SIP metal form shop drawings and design calculations, bearing the Design Engineer's Seal, shall be submitted to the Director of Structures, State Bridge Engineer, through the Engineer, for review. The Contractor's SIP metal form Design Engineer shall be a MS Registered Professional Engineer who is knowledgeable in the field of structural design.

In no case shall additional dead load produced by the use of SIP metal forms overstress any bridge component. Design calculations shall indicate any additional dead load from SIP metal form self-weight, form support hangers, concrete in flutes, concrete due to form deflection, etc. not included in the Contract Plans. The additional dead loads shall be clearly labeled and tabulated on the shop drawings. Bridge Division will evaluate the additional load for overstress of the bridge components. In the event that the additional dead load produces an overstress in any bridge component, Bridge Division will reject the Contractor's design. Deflection and loads produced by deflection of the SIP metal forms shall be considered and indicated in the design calculations.

The cambers and deflections provided in the Contract Plans do not consider the effects of SIP metal forms. The Contractor's Engineer shall take into account the weight of the forms and any additional dead load when developing the "Bridge Superstructure Construction Plan".

For the purpose of reducing any additional dead load produced by the SIP metal forms, the flutes of SIP metal forms may be filled with polystyrene foam. When polystyrene foam is used to fill the forms, the form flutes shall be filled completely; no portion of the polystyrene foam shall extend beyond the limits of the flutes. The Contractor shall ensure that the polystyrene foam remains in its required position within flutes during the entire concrete placement process. The Contractor shall not use reinforcing steel supports or other accessories in such a manner as to cause damage to the polystyrene foam. All damaged polystyrene foam shall be replaced to the

satisfaction of the Engineer. All welding of formwork shall be completed prior to placement of polystyrene foam.

For bridges not located in horizontal curves, the Contractor may reduce the additional dead load by matching the flute spacing with the transverse steel spacing of the bottom layer. The bottom longitudinal layer of steel shall have one (1) inch of minimum concrete cover measured from the bottom of the reinforcing to the top of the flute. The Contractor will not be allowed to vary the reinforcing steel spacing or size from the Contract Plans for the purpose of matching flute spacing.

907-804.03.14.2.1--Materials. SIP metal forms and supports shall meet the requirements of ASTM Designation: A653 having a coating designation G165. Form materials that are less than 0.03-inch uncoated thickness shall not be allowed.

907-804.03.14.2.2--Certification. The Contractor shall provide written certification from the manufacturer stating the product meets the requirements of this specification to the Engineer along with the delivery of the coated forms to the job site.

907-804.03.14.2.3--Polystyrene Foam. The polystyrene foam shall be comprised of expanded polystyrene manufactured from virgin resin of sufficient density to support the weight of concrete without deformation. The polystyrene foam shall be extruded to match the geometry of the flutes and provide a snug fit. The polystyrene foam shall have a density of not less than 0.8 pounds per cubic foot. The polystyrene foam shall have water absorption of less than 2.6% when tested according to ASTM Designation: C272. The Contractor shall provide written certification from the manufacturer stating the polystyrene foam product meets the requirements of this specification to the Engineer along with the delivery of the coated forms to the job site.

907-804.03.14.2.4--Design. The design of the SIP metal forms shall meet the following criteria.

1. The maximum self-weight of the stay in place metal forms, plus the weight of the concrete or expanded polystyrene required to fill the form flutes (where used), shall not exceed 20 psf.

2. The forms shall be designed on the basis of dead load of form, reinforcement, and plastic concrete plus 50 pounds per square foot for construction loads. The design shall use a unit working stress in the steel sheet of not more than 0.725 of the specified minimum yield strength of the material furnished, but not to exceed 36,000 psi.

3. Deflection under the weight of the forms, reinforcement, and plastic concrete shall not exceed 1/180 of the form span or 1/2 inch, whichever is less, for form spans of 10 feet or less, or 1/240 of the form span or 3/4 inch, whichever is less, for form spans greater than 10 feet.

4. The design span of the form shall equal the clear span of the form plus two (2) inches. The span shall be measure parallel to the form flutes.

5. Physical design properties shall be computed in accordance with requirements of the AISI Specifications for the Design of Cold Formed Steel Structural Members, latest published edition.

6. The design concrete cover required by the plans shall be maintained for all reinforcement.

7. The plan dimensions of both layers of primary deck reinforcement from the top surface of the concrete deck shall be maintained.

8. The SIP metal form shall not be considered as lateral bracing for compression flanges of supporting structural members.

9. SIP metal forms shall not be used under closure pours or in bays where longitudinal slab construction joints are located. SIP metal forms shall not be used under cantilevered slabs such as the overhang outside of fascia members.

10. Forms shall be secured to the supporting members by means other than welding directly to the member. Welding to the top flanges of steel stringers and/or girders shall not be allowed. Alternate installation procedures shall be submitted addressing this condition.

907-804.03.14.2.5--Construction. SIP metal form sheets shall not rest directly on the top of the stringer of floor beam flanges. Sheets shall be fastened securely to form supports, and maintain a minimum bearing length of one (1) inch at each end for metal forms. Form supports shall be placed in direct contact with the flange of the stringer or floor beam. All attachments for coated metal forms shall be made by bolts, clips, screws, or other approved means.

907-804.03.14.2.6--Form Galvanizing Repairs. Where forms or their installation are unsatisfactory in the opinion of the Engineer, either before or during placement of the concrete, the Contractor shall correct the defects before proceeding with the construction work. The cost of such corrective work shall be at the sole expense of the Contractor. Minor heat discoloration in areas of welds shall not be touched up.

907-804.03.14.2.7--Concrete. The Contractor shall ensure concrete placement does not damage the SIP metal forms. Approved pouring sequences shall be used. The completed SIP metal form system shall be sufficiently tight to prevent leakage of mortar or concrete. The concrete shall be consolidated to avoid honeycomb and voids, especially at construction joints, expansion joints, valleys, and ends of form sheets. Calcium chloride or any other admixture containing chloride salts shall not be used in the concrete.

907-804.03.14.2.8--Inspection. The Engineer will observe the Contractor's method of construction during all phases of the construction of the bridge deck slab, including the installation of the SIP metal form system; location and fastening of the reinforcement; composition of concrete items; mixing procedures, concrete placement, and vibration; and finishing of the bridge deck. Should the Engineer determine that the procedures used during the placement of the concrete warrant inspection of the underside of the deck, at least one section of the metal forms shall be removed in each span for this purpose. This shall be done as soon after placing the concrete as

practical in order to provide visual evidence that the concrete mix and the procedures are obtaining the desired results. An additional section shall be removed in any span if the Engineer determines that there has been any change in the concrete mix or in the procedures warranting additional inspection.

If, in the Engineer's judgment, inspection is needed to check for defects in the bottom of the deck or to verify soundness, the SIP metal forms shall be sounded with a hammer after the deck concrete has been in place a minimum of two days. If sounding discloses areas of doubtful soundness to the Engineer, the SIP metal forms shall be removed from such areas for visual inspection after the concrete has attained adequate strength. The SIP metal bridge deck forms shall be removed at no expense to the State.

At locations where sections of the metal forms have been removed, the Engineer will not require the Contractor to replace the metal forms. The adjacent metal forms and supports shall be repaired to present a neat appearance and to ensure their satisfactory retention. As soon as the form is removed, the Engineer will examine the concrete surfaces for cavities, honeycombing, and other defects. If irregularities are found and the Engineer determines that these irregularities do not justify rejection of the work, the concrete shall be repaired as directed by the Engineer. If the Engineer determines that the concrete where the form is removed is unsatisfactory, additional metal forms as necessary shall be removed to inspect and repair the slab, and the Contractor's method of construction shall be modified as required to obtain satisfactory concrete in the slab. All unsatisfactory concrete shall be removed and replaced as directed at no expense to the State.

If the method of construction and the results of the inspections as outlined above indicate that sound concrete has been obtained throughout the slabs, the amount of sounding and form removal may be reduced when approved by the Engineer.

The Contractor shall provide a safe and convenient means of conducting of the inspection.

907-804.03.15--Removal of Falsework, Forms, and Housing. In the determination of the time for the removal of falsework, forms, and housing and the discontinuance of heating, consideration shall be given to the location and character of the structure, the weather and other conditions influencing the setting of the concrete, and the materials used in the mix. No forms or supports shall be removed prior to approval by the Engineer. During cold weather, removal of housing and the discontinuance of heating shall be in accordance with Subsection 907-804.03.16.1.

Concrete in the last pour of a continuous superstructure shall have attained a compressive strength of 2,400 psi, as determined by cylinder tests or maturity meter probe, prior to striking any falsework. It is important that falsework be removed as evenly as possible to prevent excessive deflection stresses in the spans.

At the Contractor's option and with the approval of the Engineer, the time for removal of forms may be determined by cylinder tests, in accordance with the requirements listed in Table 6, in which case the Contractor shall furnish facilities for testing the cylinders. The facilities shall include an approved concrete testing machine of sufficient capacity and calibrated by an acceptable commercial laboratory. Tests shall be conducted in the presence of a Department representative

to witness and record strengths obtained on each break or performed by a Department certified technician in an approved testing laboratory.

[a1]The cylinders shall be cured under conditions which are not more favorable than those existing for the portions of the structure which they represent.

Table 6
Minimum Compressive Strength Requirements for Form Removal

Forms:

Columns	1000 psi
Side of Beams	1000 psi
Walls not under pressure	1000 psi
Floor Slabs, overhead	2000 psi
Floor Slabs, between beams	2000 psi
Slab Spans	2400 psi
Other Parts	1000 psi

Centering:

Under Beams	2400 psi
Under Bent Caps	2000 psi

Limitation for Placing Beams on:

Pile Bents, pile under beam	2000 psi
Frame Bents, two or more columns	2200 psi
Frame Bents, single column	2400 psi

For bridges, non-SIP metal forms for bridge deck slabs overhead and bridge deck slabs between beams shall be removed with the approval of the Engineer, between two weeks and four weeks after the removal of the wet burlap applied in accordance with Subsection 907-804.03.17.1, or application of liquid membrane applied in accordance with Subsection 907-804.03.17.2.

In lieu of using concrete strength cylinders to determine when falsework, forms, and housings can be removed, an approved maturity meter may be used to determine concrete strengths by inserting probes into concrete placed in a structure. The minimum number of maturity meter probes required for each structural component shall be in accordance with Table 7. Falsework, forms, and housings may be removed when maturity meter readings indicate that the required concrete strength is achieved. Procedures for using the maturity meter and developing the strength/maturity relationship shall follow the requirements of AASHTO Designation: T 325 and ASTM Designation: C 1074 specifications. Technicians using the maturity meter or calculating strength/maturity graphs shall be required to have at least two hours of training prior to using the maturity equipment.

Table 7
Requirements for use of Maturity Meter Probes

Structure Component	Quantity of Concrete	No. of Probes
Slabs, beams, walls, & miscellaneous items	0 - 30 yd^3	2
	> 30 to 60 yd^3	3
	> 60 to 90 yd^3	4
	> 90 yd^3	5
Footings, Columns & Caps	0 - 13 yd^3	2
	> 13 yd^3	3
Pavement, Pavement Overlays	1200 yd^2	2
Pavement Repairs	Per repair or 900 yd^2 Whichever is smaller	2

Methods of form removal likely to cause overstressing of the concrete shall not be used. Forms and supports shall be removed in a manner that will permit the concrete to uniformly and gradually take the stresses due to its own weight. Centers shall be gradually and uniformly lowered in a manner that will avoid injurious stresses in any part of the structure.

As soon as concrete for railings, ornamental work, parapets and vertical faces which require a rubbed finish has attained a safe strength, the forms shall be carefully removed without marring the surfaces and corners, the required finishing performed, and the required curing continued.

Prior to final inspection of the work, the Contractor shall remove all falsework, forms, excavated material or other material placed in the stream channel during construction. Falsework piles may be cut or broken off at least one foot below the mudline or ground line unless the plans specifically indicate that they are to be pulled and completely removed from the channel.

907-804.03.16--Cold or Hot Weather Concreting.

907-804.03.16.1--Cold Weather Concreting. In cold weather, the temperature of the concrete when delivered to the job site shall conform to the temperature limitations of "Temperature Limitations on Concrete when Delivered to Job Site" listed in Table 8 below. Cold weather is defined as three consecutive days when there is a probability that the daily average of the highest and lowest ambient temperatures is expected to be less than 40°F. This three-day forecast shall be based on the latest information available from the National Weather Service.

When the Contractor proposes to place concrete during seasons when there is a probability of ambient temperatures lower than 40°F, the Contractor shall have available on the project the approved facilities necessary to enclose uncured concrete and to keep the temperature of the air inside the enclosure within the ranges and for the minimum periods specified herein.

When there are indications of temperatures of less than 40°F during the first four days after placement of the concrete, the concrete shall be protected from cold temperatures by maintaining a temperature between 50°F and 100°F for at least four days after placement and between 40°F and 100°F for at least three additional days. The Contractor shall use such heating equipment such as stoves, salamanders, or steam equipment as deemed necessary to protect the concrete. When dry heat is used, means of maintaining atmospheric moisture shall be provided.

At the option of the Contractor with the approval of the Engineer, when concrete is placed during cold weather and there is a probability of ambient temperatures lower that 40°F, an approved maturity meter may be used to determine concrete strengths by inserting probes into concrete placed in a structure. The minimum number of maturity meter probes required for each structural component shall be in accordance with Table 7. An approved insulating blanketing material shall be used to protect the work when ambient temperatures are less than 40°F and shall remain in place until the required concrete strength in Table 6 is achieved. Procedures for using the maturity meter and developing the strength/maturity relationship shall follow the requirements of AASHTO Designation: T 325 and ASTM Designation: C 1074 specifications. Technicians using the maturity meter or calculating strength/maturity graphs shall be required to have at least two hours of training prior to using the maturity equipment.

One or more of the aggregates and/or mixing water may be heated. The aggregates may be heated by steam, dry heat, or by placing in the mixing water which has been heated. Frozen aggregates shall not be used. When either aggregates or water are heated above 100°F, the aggregates and water shall be combined first in the mixer before the cement is added to avoid flash set. Cement shall not be mixed with water or with a mixture of water and aggregate having a temperature greater than 100°F.

The use of salt or other chemical admixtures in lieu of heating will not be permitted.

Before placing concrete, all ice or frost shall be removed from the forms and reinforcement.

In the case of concrete placed directly on or in the ground, such as for footings or bottom slabs, protection and curing during cold weather may be provided as set for concrete pavement under Subsection 501.03.20.3.

The Contractor shall assume all risk and added cost connected with the placing and protecting of concrete during cold weather. Permission given by the Engineer to place concrete during such time will in no way relieve the Contractor of responsibility for satisfactory results. Should it be determined at any time that the concrete placed under such conditions is unsatisfactory, it shall be removed and replaced with satisfactory concrete by the Contractor without extra compensation.

TABLE 8
COLD WEATHER TEMPERATURE LIMITATIONS ON CONCRETE WHEN DELIVERED TO JOB SITE

Section thickness in the least dimension inches	Jobsite Acceptance Temperature Range °F
Less than 12	55 to 75
12 to 36	50 to 70
36 to 72	45 to 65
Greater than 72	40 to 60

907-804.03.16.2--Hot Weather Concreting. The manufacture, placement, and protection of concrete during hot weather requires special attention to ensure that uniform slump ranges and satisfactory placement qualities are maintained, that surface cracking is held to a minimum, and that design strengths are produced.

When the ambient temperature is above 90°F, the forms, reinforcing steel, steel beam flanges, and other surfaces which will come in contact with the concrete shall be cooled to below 90°F by means of a water spray or other approved methods.

When the atmospheric temperature is predicted to be 90°F or above based on the latest information available from the National Weather Service any time during the day of placement or day after placement, the time of placement shall not begin until 5:00 p.m. on the day of placement and shall be completed by 6:00 a.m. the following day.

907-804.03.17--Curing Concrete. Curing is defined as all actions taken to ensure the moisture and temperature conditions of freshly placed concrete exist so the concrete may develop its potential properties. Curing shall take place from the time of placement until its potential properties have developed. The Contractor shall use the guidance in ACI 308R-01 to:

a) cure the concrete in such a manner as to prevent premature moisture loss from the concrete,
b) supply additional moisture to the concrete as required in order to ensure sufficient moisture within the concrete, and
c) maintain a concrete temperature beneficial to the concrete.

Curing in accordance with the requirements in either Subsection 907-804.03.17.1 or Subsection 907-804.03.17.2 shall be completely established within 20 minutes after finishing, except as noted for bridge decks. Finishing is complete when the pan drag, burlap drag, or other finishing method is complete.

When stay-in-place (SIP) metal forms are used in accordance with Subsection 907-804.03.14.2 in conjunction with the Transverse Method in accordance with Subsection 804.03.19.7.3, if the concrete mixture contains lightweight aggregate (LWA) meeting the requirements of Subsection 907-703.19.2 and an internal curing water content of 8.0 pounds or greater per 100 pounds of total cementitious materials, curing shall be accomplished in accordance with either Subsection 907-804.03.17.1 or Subsection 907-804.03.17.2. The minimum amount of LWA shall be established following the information in the Department's *Concrete Field Manual*, Paragraph 5.5.5. If the concrete mixture does not meet or exceed this internal curing water content, curing shall be accomplished in accordance with Subsection 907-804.03.17.1.

When SIP metal forms are not used or used in conjunction with the Longitudinal Method in accordance with Subsection 804.03.19.7.2, curing shall be accomplished in accordance with either Subsection 907-804.03.17.1 or Subsection 907-804.03.17.2.

The length of time for curing shall be maintained in accordance with either of the following:

1. Prescribed Length of Time:

a) Curing following the requirements of Subsection 907-804.03.17.1 shall continue uninterrupted for at least 14 days.
b) Curing following the requirements of Subsection 907-804.03.17.2 shall continue uninterrupted for at least 10 days.

OR

2. Length of Time Defined by Development of Compressive Strength:
Curing following the application requirements of Subsection 907-804.03.17.1 or Subsection 907-804.03.17.2 shall continue uninterrupted for each day's production until the compressive strength of the concrete exceeds 75% of the 28-day compressive strength submitted as the Basis of Proportioning per Subsection 907-804.02.10.1. Therefore, if an area is being cured in accordance with Subsection 907-804.03.17.1, the curing by wet burlap shall continue until the concrete in that area has attained a minimum of 75% of the 28-day compressive strength submitted as the Basis of Proportioning per Subsection 907-804.02.10.1. Likewise, if an area is being cured in accordance with Subsection 907-804.03.17.2, the curing by liquid membrane shall continue until the concrete in that area has attained a minimum of 75% of the 28-day compressive strength submitted as the Basis of Proportioning per Subsection 907-804.02.10.1.

The compressive strength of the concrete may be determined by the use of maturity meter in accordance with Subsection 907-804.03.15.

907-804.03.17.1--Water With Waterproof Cover. All burlap shall be completely saturated and wet prior to placing it on the concrete. The burlap shall have been fully soaked in water for a minimum of 12 hours prior to placement on the concrete.

For bridge decks, the Contractor shall apply one (1) layer of saturated burlap within 20 minutes of the initial strike-off for bridges without a skew and 25 minutes of the initial strike-off for bridges with a skew. For all other concrete, the Contractor shall apply one (1) layer of saturated burlap within 20 minutes of completing finishing.

For bridge decks, following the first layer of burlap, the Contractor shall apply a second layer of saturated burlap within five (5) minutes of applying the first layer.

The applied burlap shall completely cover all exposed concrete surfaces. In areas where the burlap may not be directly applied due to the concrete surface, for example, in areas where reinforcing steel protrudes thru the concrete surface, like in the areas of a bridge deck where the bridge railing will be constructed at a later time, the saturated burlap shall be draped over the steel. The concrete surface shall not be allowed to dry after strike-off or at any time during the curing period.

The Contractor shall maintain the burlap in a fully wet condition using powered fogging equipment capable of producing a fog spray of atomized droplets of water until the concrete has gained sufficient strength to allow foot traffic without the foot traffic marring the surface of the concrete. Burlap shall not be maintained in the fully wet condition using equipment which does not produce a fog spray of atomized droplets of water or by use of manually pressurized sprayers.

For bridge decks, once the concrete has gained sufficient strength to allow foot traffic which does not mar the surface of the concrete, soaker hoses shall be placed on the burlap. The soaker hoses shall then be supplied with running water continuously to maintain continuous saturation of all burlap and the entire concrete surface.

If there is a delay in the placement of the first layer of saturated burlap outside the time limit, the struck-off and finished concrete shall be kept wet by use of the powered fogging equipment used to keep the burlap wet.

White polyethylene sheets shall be placed on top of the wet burlap and, as applicable, soaker hoses, covering the entire concrete surface as soon as practical and not more than 12 hours after the placement of the concrete. White polyethylene sheets of the widest practical width shall be used, overlapping adjacent sheets a minimum of six inches (6") and tightly sealed with an adhesive like pressure sensitive tape, mastic, glue, or other approved methods to form a complete waterproof cover of the entire concrete surface. White polyethylene sheets which overlap a minimum of two feet (2') may be held in place using means other than an adhesive. The white polyethylene sheets shall be secured so that wind will not displace them. The Contractor shall immediately repair the broken or damaged portions or replace sections that have lost their waterproof qualities.

If burlap and/or white polyethylene sheets are temporarily removed for any reason during the curing period, the Contractor shall keep the entire exposed area continuously wet. The saturated burlap and white polyethylene sheets shall be replaced, resuming the specified curing conditions, as soon as possible.

The Contractor shall inspect the bridge deck surface once every eight (8) hours for the entirety of the curing period, so that all areas remain wet for the entire curing period and all curing requirements are satisfied and document the inspection in accordance with Subsection 907-804.03.17.1.1.

At the end of the curing period, one coating of liquid membrane shall be applied following the requirements of Subsection 907-804.03.17.1.2. The purpose of the coating of liquid membrane is to allow for slow drying of the concrete. The application of liquid membrane to any area shall be complete within 30 minutes of the beginning of removal of the white polyethylene sheets, soaker hoses, and burlap from this area.

907-804.03.17.1.1--Documentation for Bridge Decks. The Contractor shall provide the Engineer with a daily inspection report that includes:

- documentation that identifies any deficiencies found (including location of deficiency);
- documentation of corrective measures taken;
- a statement of certification that all areas are wet and all curing material is in place on the entire bridge deck;
- documentation showing the time and date of all inspections and the inspector's signature;
- documentation of any temporary removal of curing materials including location, date and time, length of time curing was removed, and means taken to ensure exposed area was kept continuously wet.

907-804.03.17.1.2--Liquid Membrane. At the end of the 14-day wet curing period the wet burlap and polyethylene sheets shall be removed and within 30 minutes, the Contractor shall apply white liquid membrane to the deck. The liquid membrane shall be thoroughly mixed within the time recommended by the liquid membrane producer but no more than an hour before use. If the use of liquid membrane results in a streaked or blotched appearance, the method shall be stopped and water curing applied until the cause of defective appearance is corrected.

The liquid membrane shall be applied when no free water remains on the surface but while the surface is still wet. The liquid membrane shall be applied according to the manufacturer's instructions with a minimum spreading rate per coat of one (1) gallon per 200 square feet of concrete surface. If the concrete is dry or becomes dry, the Contractor shall thoroughly wet it with water applied as a fog spray by means of approved equipment.

The application of liquid membrane shall be accomplished by the use of power applied spray equipment using nozzles and other equipment recommended by the liquid membrane producer. Manually pressurized or manual pump-up type sprayers shall not be used to apply the first application of liquid membrane.

As a visual guide, the color of concrete covered with the required amount of liquid membrane should be indistinguishable from a sheet of commercially available standard "letter" size white copier paper placed on top of it when viewed from a distance of about five feet (5') away horizontally if standing on the same grade as the concrete. The appearance of the concrete does not supersede applying the minimum spreading rate.

The coating shall be protected against marring for at least seven (7) days after the application of the curing compound. The coating on bridge decks shall receive extra attention and may require additional protection as required by the Engineer. All membrane marred or otherwise disturbed shall be given an additional coating. Manually pressurized or manual pump-up type sprayers may be used for giving marred areas the required additional application of liquid membrane. Should the surface coating be subjected repeatedly to injury, the Engineer may require that the water curing method be applied at once.

The 7-day period during which the liquid membrane is applied and protected shall not be reduced even if the period of wet curing is extended past the required 14 days.

907-804.03.17.1.2.1--Liquid Membrane Documentation. The Contractor shall make available to the Engineer an application rate verification method and any information necessary during application of the liquid membrane to verify that the rate of application meets the prescribed rate for the various surfaces of the concrete, including, but not limited to, the top surface of the bridge deck and exposed sides of the bridge deck after any forms are removed. The Contractor shall submit this application verification method to the Engineer in accordance with Subsection 907-804.02.12.1.1.

One method of verifying the rate of application is as follows:

1. Determine the volume of liquid membrane in the container. For a container with a uniform cross-sectional area, for example a 55-gallon drum, determine the area of the cross-section. Determine the height of the surface of the liquid membrane from the bottom of the container. This may be accomplished by inserting a sufficiently long, clean dip-stick parallel with the axis of the container into the liquid membrane until the inserted end of the dip-stick contacts the bottom of the container. On removing the dip-stick, measure the length from the end which was inserted to the point on the dip-stick where the liquid membrane ceases to coat the dip-stick. Multiply the area of the cross-section by the height of the level of liquid membrane, maintaining consistent units, to determine the volume.
2. Perform step 1 prior to beginning applying the liquid membrane to establish the initial volume.
3. During the period of application, perform step 1 each 100 square feet of bridge deck.
4. In order to meet the required application rate of one (1) gallon per 200 square feet, the amount in the container shall be at least 0.5 gallon less than the previous volume in the previous 100 square feet. Other changes in volume may apply depending on the manufacturer's recommended application rate.
5. Additional applications to an area shall be applied until the required rate is satisfied. Areas which are not visually satisfactory to the Engineer shall have additional liquid membrane applied as directed by the Engineer.

The amount of liquid membrane applied shall be determined each day using the application verification method. This information shall be submitted to the Engineer within 24 hours of applying the liquid membrane.

907-804.03.17.2--Liquid Membrane Method. All surfaces on which curing is to be by liquid membrane shall be given the required surface finish prior to the application of liquid membrane. Concrete surfaces cured by liquid membrane shall receive two applications of white liquid membrane. Neither application shall be made from a position supported by or in contact with the freshly placed concrete. Both applications shall be applied perpendicularly to the surface of the concrete.

When using liquid membrane, the liquid membrane shall be thoroughly mixed within the time recommended by the liquid membrane producer but no more than an hour before use. If the use of liquid membrane results in a streaked or blotched appearance, the method shall be stopped and water curing applied until the cause of defective appearance is corrected.

The application of liquid membrane shall accomplished by the use of power applied spray equipment using nozzles and other equipment recommended by the liquid membrane producer. Manually pressurized or manual pump-up type sprayers shall not be used to apply the first two applications of liquid membrane.

The liquid membrane shall be applied when no free water remains on the surface but while the surface is still wet. The liquid membrane shall be applied according to the manufacturer's instructions with a minimum spreading rate per coat of one (1) gallon per 200 square feet of concrete surface. If the concrete is dry or becomes dry, the Contractor shall thoroughly wet it with water applied as a fog spray by means of approved equipment.

The first application of the liquid membrane shall be made as the work progresses. For bridge decks, the first application shall be completed in each area of the deck, including the area in which the bridge railing will be later constructed, within 20 minutes of initial strike-off for bridges with no skew and within 25 minutes of initial strike-off for bridges with skew. For all other concrete, the first application of the liquid membrane shall be completed within 20 minutes of finishing.

The second application shall be applied within 30 minutes after the first application. The liquid membrane shall be uniformly applied to all exposed concrete surfaces.

As a visual guide, the color of concrete covered with the required amount of liquid membrane should be indistinguishable from a sheet of commercially available standard "letter" size white copier paper placed on top of it when viewed from a distance of about five feet (5') away horizontally if standing on the same grade as the concrete. The appearance of the concrete does not supersede applying the minimum spreading rate.

The Contractor shall make available to the Engineer an application rate verification in accordance with Subsection 907-804.03.17.1.2.1.

The coating shall be protected against marring for at least 10 days after the application of the curing compound. The coating on bridge decks shall receive extra attention and may require additional protection as required by the Engineer. All membrane marred or otherwise disturbed shall be given an additional coating. Manually pressurized or manual pump-up type sprayers may be used for giving marred areas the required additional application of liquid membrane. Should the surface coating be subjected repeatedly to injury, the Engineer may require that the water curing method be applied at once.

After the specified time for curing, but prior to constructing the bridge railing, all liquid membrane shall be removed from both the exposed surfaces of the reinforcing steel and the concrete surfaces on which bridge rail will be constructed. This removal of liquid membrane may be accomplish by high pressure washing or other methods approved by the Engineer.

907-804.03.18--Expansion and Fixed Joints, Bearings, Anchor Bolts, Plates, Castings, Pipes, Drains, Conduits, Etc. All joints shall be constructed according to details shown on the plans. The edges of the concrete at open or filled joints shall be chamfered or edged as indicated on the plans.

907-804.03.18.1--Open Joints. Open joints shall be placed in the locations shown on the plans and shall be constructed by the insertion and subsequent removal of a wood strip, metal plate, or other approved material. The insertion and removal of the template shall be accomplished without chipping or breaking the corners of the concrete. Reinforcement shall not extend across an open joint unless so specified on the plans.

907-804.03.18.2--Filled Joints. Poured expansion joints and joints to be sealed with premolded materials shall be constructed similar to open joints. When premolded types are specified, the filler shall be placed in correct position as the concrete on one side of the joint is placed. When

the form is removed, the concrete on the other side shall be placed. Adequate water stops of metal, rubber, or plastic shall be carefully placed as shown on the plans.

907-804.03.18.3--Premolded and Preformed Joint Seals. When preformed elastomeric compressive joint seals are specified, the previously formed and cured open joint shall be thoroughly cleaned of all foreign matter, the required adhesive uniformly applied, and the seal installed in accordance with the recommendations of the manufacturer of the seal.

When premolded filler is used for the joints in the roadway slab, the tops shall be adequately sealed with poured joint filler in accordance with details on the plans. Premolded filler shall be permanently fastened to an adjacent concrete surface by appropriate use of copper wire, copper nails, or galvanized nails.

907-804.03.18.4--Steel Joints. The plates, angles, or other structural shapes shall be accurately shaped at the shop to conform to the section of the concrete floor. Fabrication and painting shall conform to the specifications covering those items. When called for on the plans or in the special provisions, the material shall be galvanized in lieu of painting. Care shall be taken to ensure that the surface in the finished plane is true and free of warping. Positive methods shall be employed in placing the joints to keep them in correct position during the placing of the concrete. The opening at expansion joints shall be that designated on the plans at normal temperature, and care shall be taken to avoid impairment of the clearance in any manner.

907-804.03.18.5--Water Stops. Adequate water stops of metal, rubber, or plastic shall be placed as shown on the plans. Where movement at the joint is provided for, the water stops shall be of a type permitting movement without injury. They shall be spliced, welded, or soldered to form continuous watertight joints.

907-804.03.18.6--Bearing Devices. Bearing plates, rockers, and other bearing devices shall be constructed according to details shown on the plans. Unless otherwise specified or set in plastic concrete, they shall be set in grout to insure uniform bearing. Structural steel and painting shall conform to the requirements of Sections 810 and 814. When specified, the material shall be galvanized in lieu of painting. The rockers or other expansion bearing devices shall be set, considering the temperature at the time of erection, so that the required position of the device is provided.

At all points of bearing contact, concrete members shall be separated from underlying members by dimensioned bearing pads or by methods and/or materials specified on the plans.

When not otherwise specifically provided, contact areas between concrete super-structures and substructures shall be separated by three layers of No. 15, Type I, roofing felt.

907-804.03.18.7--Friction Joints. Metal friction joints shall consist of plates as indicated on the plans and shall be securely anchored in correct position. All sliding surfaces shall be thoroughly coated with an approved graphite grease. Movement shall not be impeded by the concrete in which the plates are embedded.

907-804.03.18.8--Placing Anchor Bolts, Plates, Castings, Grillage, Conduits, Etc. All anchor bolts, plates, castings, grillage, conduits, etc. indicated on the plans to be placed in or on the concrete shall be placed, set, or embedded as indicated or as directed. These items of the construction shall be set in portland cement mortar as referenced in Subsection 714.11.5, except that anchor bolts may, as permitted by the Engineer, be built into the masonry, set in drilled holes, or placed as the concrete is being constructed by inserting encasing pipe or oiled wooden forms of sufficient size to allow for adjustment of the bolts. After removal of the pipe or forms, the space around the bolts shall be filled with portland cement mortar completely filling the holes. The bolt shall be set accurately and perpendicular to the plane of the seat.

Anchor bolts which are to be set in the masonry prior to the erection of the superstructure shall be carefully set to proper location and elevation with a template or by other suitable means.

When bed plates are set in mortar, no superstructure or other load shall be placed thereon until this mortar has been allowed to set for a period of at least 96 hours, subject to the restrictions for cold weather concreting in Subsection 907-804.03.16.1. The mortar shall be kept well moistened during this period.

Weep hole drains shall be installed in abutments and retaining walls, and roadway drains or scuppers shall be installed in the roadway slabs in accordance with the details shown on the plans.

Where backfill is to be made at weep holes or openings in the structure, sand or stone chimneys or French drains shall be constructed as specified and shall extend through the portion of the backfill to be drained. Except as otherwise provided, the sand, stone, or slag used in this construction shall meet the requirements of Subsection 704.04.

907-804.03.19--Finishing Concrete Surfaces.

804.03.19.1--Classes of Finishes. Surface finishes of exposed concrete surfaces shall be classified as follows:

Class 1 - Ordinary Surface Finish
Class 2 - Rubbed or spray Finish
Class 3 - Tooled Finish
Class 4 - Sand-Blast Finish
Class 5 - Wirebrush or Scrubbed Finish
Class 6 - Floated Surface Finish

907-804.03.19.2--Class 1, Ordinary Surface Finish. Immediately following the removal of forms, all fins and irregular projections shall be removed from all surfaces except from those which are not to be exposed or not to be waterproofed. On all surfaces, the cavities produced by form ties and all other holes, honeycomb spots, broken corners or edges, and other defects shall be thoroughly cleaned, and after having been kept saturated with water for at least three hours shall be carefully pointed and trued with a mortar of cement and fine aggregate mixed in the proportions used in the class of the concrete being finished. Mortar used in pointing shall be not more than one hour old. The mortar patches shall be cured as specified under Subsection 907-804.03.17. All

construction and expansion joints shall be left carefully tooled and free of mortar and concrete. The joint filler shall be left exposed for its full length with clean and true edges.

The resulting surfaces shall be true and uniform. All surfaces which cannot be repaired to the satisfaction of the Engineer shall be given a Class 2 rubbed finish.

907-804.03.19.3--Class 2, Rubbed or Spray Finish.

907-804.03.19.3.1--Rubbed Finish. After removal of forms, the Class 1 finish shall be completed and the rubbing of concrete shall be started as soon as its condition will permit. Immediately before starting this work, the concrete shall be kept thoroughly saturated with water for at least three hours. Surfaces shall be rubbed with a medium course Carborundum stone using a small amount of mortar on its face. The mortar shall be composed of cement and sand mixed in the proportions used in the concrete being finished. Rubbing shall be continued until all form marks, projections, and irregularities have been removed, all voids are filled, and a uniform surface has been obtained. The paste produced by this rubbing shall be left in place at this time.

After all concrete above the surface being treated has been cast, the final finish shall be obtained by rubbing with a fine Carborundum stone and water. This rubbing shall continue until the entire surface is of a smooth texture and uniform color.

After the final rubbing is completed and the surface has dried, it shall be rubbed with burlap to remove loose powder and objectionable marks.

907-804.03.19.3.2--Spray Finish. Prior to the spray finish, the concrete shall be given a Class 1 finish in accordance with Subsection 907-804.03.19.2, supplemented if necessary with a grout meeting the requirements of Subsection 714.11 with fine aggregate modified to require 100 percent passing the No. 16 Sieve.

Grout shall be applied with burlap pads or float sponges, and as soon as the grout has dried the surface shall be brushed to remove all loose grout and the surface left smooth and free of air holes. Surfaces to be sprayed shall be free of efflorescence, flaking coatings, dirt, oil, and other foreign substances. Prior to application of the spray finish, the surfaces shall be free of moisture, as determined by sight and touch, and in a condition consistent with the manufacturer's published recommendations.

The spray finish material shall meet the requirements of Subsection 714.12 and shall be listed on of Approved Sources of Materials. The spray finish shall be applied with heavy duty spray equipment capable of maintaining a constant pressure as necessary for proper application. The material shall be applied as recommended by the manufacturer except the rate of application shall not be less than one gallon per 50 square feet of surface area without prior written approval of the Engineer.

The completed finish shall be tightly bonded to the structure and present a uniform appearance and texture equal to or better than a rubbed finish. If necessary, additional coats shall be sprayed to produce the desired surface texture and uniformity. Upon failure to adhere positively to the

structure without chipping or cracking or to attain the desired surface appearance, the coatings shall be completely removed and the surface given a rubbed finish in accordance with 907-804.03.19.3.1, or other approved methods shall be used to obtain the desired surface finish to the satisfaction of the Engineer without additional cost to the State.

907-804.03.19.4--Classes 3, 4, and 5 Finishes. If required, specifications for these finishes will be contained in the special provisions.

907-804.03.19.5--Class 6, Floated Surface Finish. After the concrete has been deposited in place, it shall be consolidated and the surface shall be struck off by means of a strike board and floated with a wooden or cork float. An edging tool shall be used on edges and expansion joints. The surface shall not vary more than 1/8 inch under a 10-foot straightedge. The surface shall have a granular or matte texture which will not be slick when wet.

907-804.03.19.6--Required Finishes for Various Surfaces.

907-804.03.19.6.1--General. Unless otherwise specified, the top surface of sidewalks, the top horizontal surfaces of footings, and top slabs of box bridges, box culverts, or other structures shall be given a Class 6 finish. All formed concrete surfaces shall be given a Class 1 finish, except on surfaces which are completely enclosed, such as the inside surfaces of cells of box girders, the removal of fins and form marks and the rubbing of mortared surfaces to a uniform color will not be required.

In reference to finishing, exposed surfaces are surfaces or faces which may be seen after all backfill has been placed. Exposed surfaces requiring a Class 2 finish shall be finished at least one foot below the ground line or the low water elevation, whichever is higher.

The Class 2 finish shall be made upon a Class 1 finish. After the removal of forms the Class 1 finish shall be completed and the rubbing of concrete shall be started as soon as the condition of the concrete will permit.

Bridge floors shall be finished in accordance with Subsection 907-804.03.19.7.

907-804.03.19.6.2--Finishing Formed Concrete Surfaces of Box Bridges, Box Culverts, Pipe Headwalls, and Minor Structures. The exposed surfaces of wing walls and parapets of box bridges and box culverts to be used as vehicular or pedestrian underpasses shall be given a Class 2 finish. Exposed surfaces of other box culverts or box bridges, pipe culvert headwalls, and other minor structures shall be given a Class 1 finish unless otherwise indicated on the plans.

The exposed surfaces of retaining walls including copings and parapets shall receive a Class 2 finish.

907-804.03.19.6.3--Finishing Formed Concrete Surface of Bridges. All formed concrete bridge surfaces which are exposed shall have a Class 1 or 2 finish as set forth herein unless designated otherwise on the plans.

Bridges with designated surfaces for Class 2 finish are classified as follows:

Group A - Bridges over highways, roads and streets.
Group B - Bridges over waterways and railroads.
Group BB - Twin or adjacent bridges of Group B category.

When a Group B or BB bridge also spans a highway, road or street, exposed concrete surfaces shall be finished in accordance with Group A requirements.

(A) Superstructures. Concrete surfaces to be given a Class 2 finish shall be the exposed surfaces of wings and rails and other exposed surfaces indicated by a double line in Figures 804-1, 804-2, and 804-3.

When a Group B or BB also spans a highway, road or street, the superstructure of spans over and extending one span in each direction beyond the lower level highway, road or street shall be given a Class 2 finish as shown for Group A.

(B) Substructures. Concrete surfaces to be given a Class 2 finish are as follows:

Group A. Exposed surfaces of abutments, end bents, end bent posts, wing walls, railing, retaining walls, parapets, copings, piers, columns, piles, caps, struts or walls between columns or piles, encasement of steel piles, arch rings and spandrel walls.

Group B and BB. Exposed surfaces of abutments, wing walls, end bent posts, railing, retaining walls, parapets and copings.

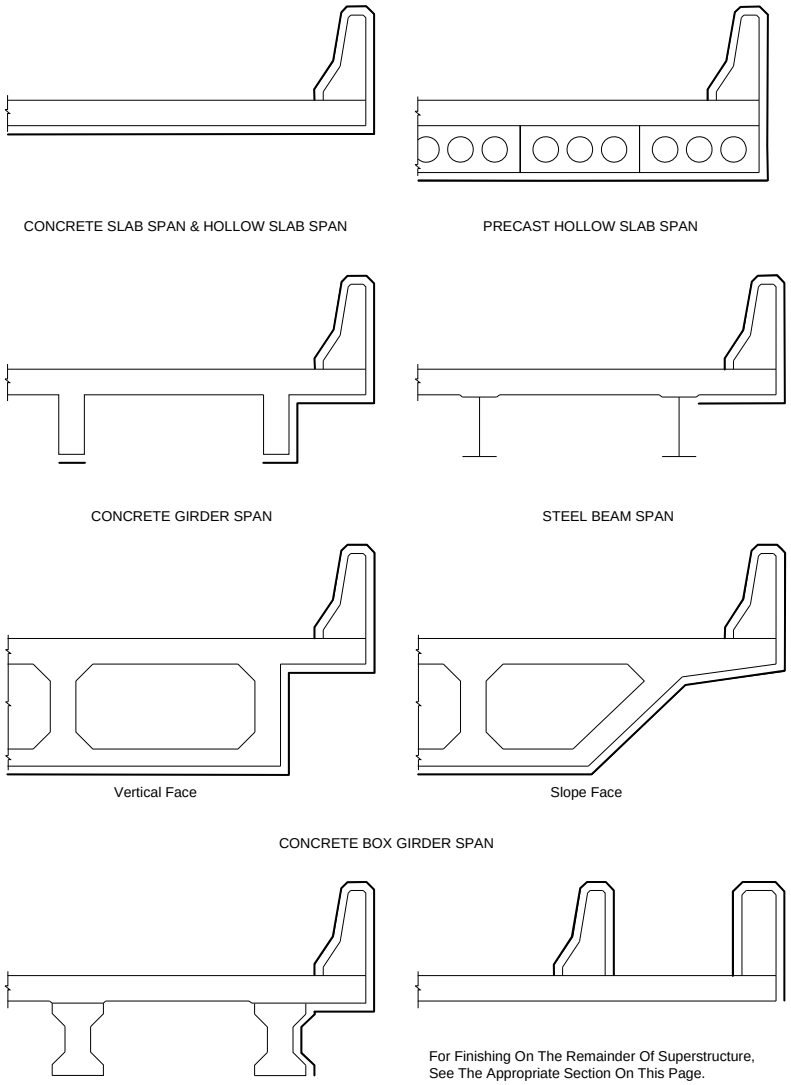

GROUP "A"

BRIDGES OVER HIGHWAYS, ROADS & STREETS

CLASS 2 FINISH - BRIDGE SUPERSTRUCTURES - FIG. 804-1

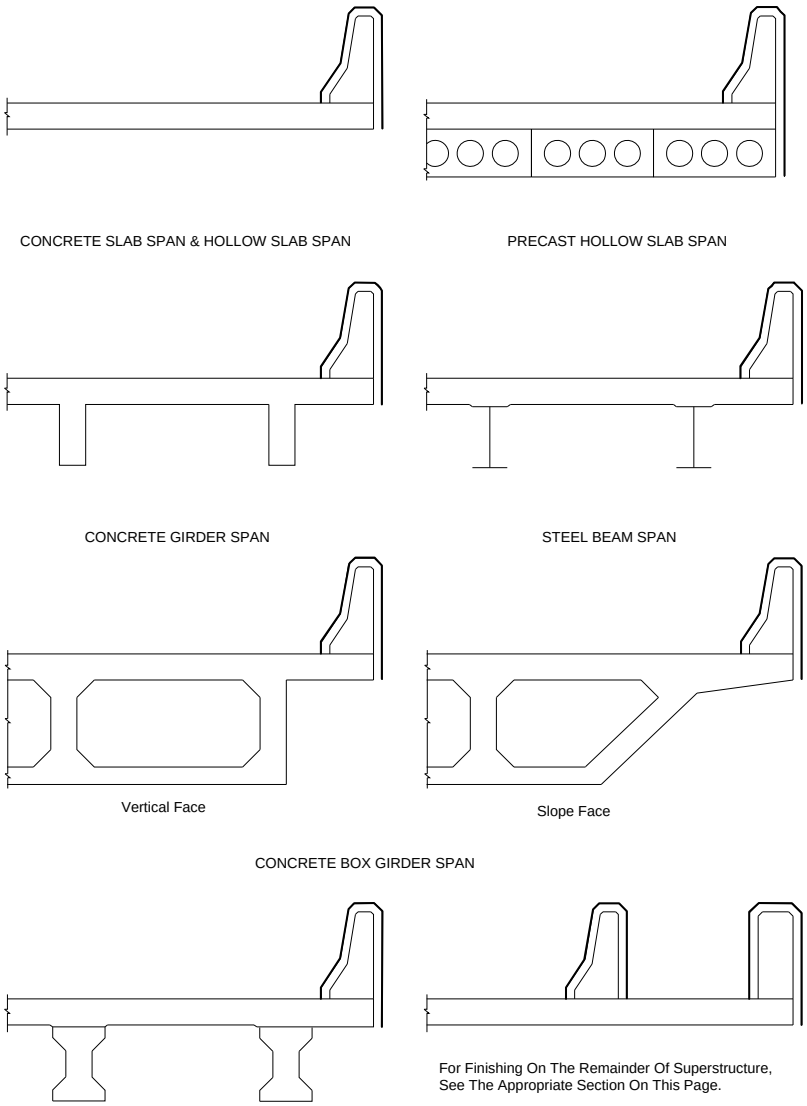

GROUP "B"

BRIDGES OVER WATERWAYS AND BRIDGES OVER RAILROAD TRACKS

CLASS 2 FINISH - BRIDGE SUPERSTRUCTURES - FIG. 804-2

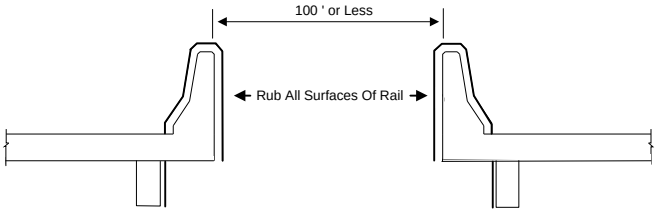

GROUP "B B" - ADJACENT BRIDGES

GROUP "B B"

TWIN or DUAL BRIDGES

CLASS 2 FINISH - BRIDGE SUPERSTRUCTURES - FIG. 804-3

907-804.03.19.7--Finishing Bridge Decks.

907-804.03.19.7.1--General. Concrete bridge decks shall be struck off and finished by the method(s) designated on the plans.

In the event a method is not designated, the Contractor may use either the longitudinal or transverse method subject to the requirements contained in these specifications.

Except when indicated otherwise on the plans, the finish of the bridge deck shall be either a belt finish, a broom finish, or one of the following drag methods: pan, double pan, burlap, or pan and burlap. Manual finishing of the bridge deck shall be performed only in areas inaccessible by the finishing equipment mounted to the strike-off screed, but shall not hinder the requirements for curing in accordance with Subsection 907-804.03.17.1. The surface texture specified and surface requirements shall be in accordance with the applicable requirements of Subsections 501.03.17 and 501.03.18 modified only as the Engineer deems necessary for bridge deck construction operations.

At no time shall water on the surface of the concrete from bleeding, fogging, curing, or other sources be worked into the concrete or used as an aid for finishing.

Regardless of the method of finishing selected, requirements for curing per Subsection 907-804.03.17 shall be completed within the specified time limits. If the requirements in Subsection 907-804.03.17 are not completed within the specific time limits, the Contractor shall cease operations, revise his operations up to and including acquiring new or additional equipment or additional personnel in order to satisfy the requirements in Subsection 907-804.03.17, and, on approval from the Engineer, resume operations

907-804.03.19.7.2--Longitudinal Method. The longitudinal method may be used for repairs to bridge decks or bridge widening projects. For bridge widening projects, curing in accordance with Subsections 907-804.03.17 shall be completed within 30 minutes of initial strike-off for bridges without skew and within 35 minutes of initial strike-off for bridges with skew.

The longitudinal method requires that the strike-off screed be supported on accurately graded and supported bulkheads or templates placed across the full width at the end(s) of the pour. Before the concrete is placed, approved fixed templates or wooden bulkheads of not less than 1¼-inch lumber shall be placed perpendicular to the centerline of the roadway, or in the case of skew bridges at the angle of skew. At least one dry run shall be made the length of each pour with a "tell-tale" device attached to the screed to assure the specified clearance to the reinforcing steel. The upper surface of the template or bulkheads shall be accurately set to conform to the required grade and crown.

Special attention shall be given to the gutter lines where the strike-off screed cannot reach. The gutters shall be finished by hand and tested with the straight edge. Floor drains shall be set lower than the finished gutter line and finished over. After initial set, the concrete shall be dished out and finished around the drains to form an outlet.

After the concrete has been deposited and rough graded, it shall be struck off by means of a strike-off screed resting on the bulkheads or fixed templates. The strike-off screed shall be of a type satisfactory to the Engineer and shall have sufficient strength to retain its shape under all working conditions. The final surface shall comply with the applicable requirements of Subsections 501.03.17.6 and 501.03.18, and unless otherwise specified in the contract, the final finish under this method shall be the belt finish.

In general, the overall strike-off screed should be trussed, with bracing heavy enough to support the weight of a man without deflecting, and should be adjustable for camber and correction of sag.

The strike-off screed will ride on the bulkheads or fixed templates at the ends of the section being finished. Care shall be taken to see that the bulkhead or fixed template elevations are accurately set since the entire span surface will be controlled by them. The manipulation of the screed shall be such that neither end is raised from the bulkheads or templates during the process.

The concrete shall be struck off by beginning at one curb and proceeding entirely across the span. A slight excess of concrete shall be kept in front of the cutting edge at all times. This operation shall be repeated at least three times. In each case, the strike-off screed shall be picked up and carried back to the point of beginning. No backward strokes will be allowed. The strike-off screed shall be moved along the bulkheads or fixed templates with a combined longitudinal and transverse motion. This operation may be manual or mechanical. Standing or walking in the fresh concrete ahead of the strike-off screed will not be permitted.

907-804.03.19.7.3--Transverse Method. The transverse method requires that the screeding equipment be supported on accurately graded and supported rails placed beyond the gutter lines and parallel with the centerline of the bridge.

The machine shall be so constructed and operated as to produce a bridge deck of uniform density with minimum manipulation of the fresh concrete and achieved in the shortest possible time. Manual transverse methods of screeding will not be permitted.

The finishing machine shall be supported on vertically adjustable rails set a sufficient distance from the gutter line to allow free movement of the screed from gutter line to gutter line. Satisfactory means of load distribution with minimum rail deflection shall be provided. The screed rails for a deck pour shall be completely in place for the full length of the pour and shall be firmly secured prior to placing concrete. The screed rails shall be adjusted as necessary to compensate for settlement and deflection occurring during the screeding operations. Supports for the screed rail shall be located directly over slab overhang support brackets as referenced in Subsection 907-804.03.14.1.

At least one dry run shall be made the length of each pour with a "tell-tale" device attached to the screed carriage to assure the specified clearance to the reinforcing steel.

The screed shall be equipped with a metal cutting edge or other approved mechanical means for accurately fine grading the plastic concrete to the required grade and surface smoothness and shall be supported by a bridging structure sufficiently rigid and heavy to perform operations

satisfactorily on concrete of minimum slump without vibration, distortion, and wrecking of forms. The screed shall be mechanically actuated to deliver the screeding action and for travel in a longitudinal direction at a uniform rate along the bridge deck.

The screed shall complete sufficient passes to strike off all of the excess concrete with ample mortar along the entire leading edge to assure filling of low spots. Care shall be taken to remove all objectionable material from the gutters where final hand finishing will be required.

The selection of the transverse method may require the Contractor to furnish bridge deck concrete which contains an approved water-reducing set-retarding admixture in the quantities approved by the Engineer at no additional cost to the State. See Subsection 713.02 for more information.

Other finishing requirements shall be in accordance with the general requirements in Subsection 907-804.03.19.7.1 and as specified on the plans.

907-804.03.19.7.4--Acceptance Procedure for Bridge Deck Smoothness. After the bridge decks and bridge end slabs are completed and preferably before the construction of the bridge railing, they shall be tested for ride quality using a Contractor furnished profilograph. Profile Index Values shall be determined in accordance with Department SOPs and these specifications. The profilograph shall meet the requirements of Subsection 907-804.03.19.7.5. Profiles will be obtained in the wheel paths of the main thru lanes and, where conditions allow, in the wheel paths of any auxiliary lanes or tapers. Profile Index Values for bridge decks and bridge end slabs shall be obtained for all state roads with four lanes or more, on state roads three lanes or less where the current traffic count is 2000 ADT or higher, or as designated on the plans. Ride quality tests will begin at a point where the rearmost wheel of the profilograph is as close to the beginning of the bridge end slab as possible and shall proceed forward across the remainder of the bridge end slab, across the bridge deck and continue across the next bridge end slab to a point where the front-most wheel of the profilograph reaches the far-most edge of the bridge end slab. Bridges and bridge end slabs not requiring a ride quality test must meet a 1/8 inch in 10-foot straightedge requirement in longitudinal and transverse directions. Bridges in horizontal curves having a radius of less than 1000 feet at the centerline and bridges within the superelevation transition of such curves are excluded from a test with the profilograph.

The Profile Index Value for bridge decks including the bridge end slabs shall be averaged for the left and right wheel path for each lane and where applicable, each auxiliary lane and taper, and shall not exceed 65 inches per mile for each lane. Auxiliary lanes, tapers, shoulders and other areas that are not checked with the profilograph, shall meet a 1/8 inch in 10-foot straightedge check made transversely and longitudinally across the deck or slab. In addition, individual bumps or depressions exceeding 0.3 of an inch, when measured from a chord length of 25 feet, shall be corrected and the surface shall meet a 1/8 inch in 10-foot straightedge check made transversely across the deck or slab.

Bridge decks and bridge end slabs not meeting the preceding requirements shall be corrected. Corrective work shall be done at no additional cost to the Department. Corrective work shall consist of grinding the bridge deck in accordance with this specification. All corrective work shall precede final surface texturing. After completion of final surface texturing, all surface areas

corrected by grinding shall be sealed with a nonstaining 40% minimum alkylalkoxysilane penetrating sealant applied per the manufacturer's directions.

In case the bridge end slabs are to be constructed on a future project, the bridge deck(s) alone shall be tested for ride quality using the acceptance procedure outlined above, except that the ride quality test will begin at a point where the rearmost wheel of the profilograph is as close to the beginning of the bridge as possible and shall proceed forward across the bridge deck to a point where the front-most wheel of the profilograph reaches the far-most edge of the bridge.

Expansion joint installation shall be delayed and the joint temporarily bridged to facilitate operation of the profilograph and grinding equipment across the joint wherever feasible.

It shall be the Contractor's responsibility to schedule profilograph testing. The Contractor shall notify the Department at least five (5) days in advance of profilograph testing. The Contractor shall ensure that the area to be tested has been cleaned and cleared of all obstructions. Profilograph testing of bridge decks and bridge end slabs shall be performed by the Contractor under supervision of the Engineer. All profilograph testing shall be performed at no additional cost to the Department. The Contractor will be responsible for traffic control associated with this testing operation.

907-804.03.19.7.4.1--Grinding Bridge Decks.

907-804.03.19.7.4.1.1--Equipment. The grinding equipment shall be a power driven, self-propelled machine that is specifically designed to smooth and texture portland cement concrete pavement with diamond blades. The effective wheel base of the machine shall not be less than 12.0 feet. It shall have a set of pivoting tandem bogey wheels at the front of the machine and the rear wheels shall be arranged to travel in the track of the fresh cut pavement. The center of the grinding head shall be no further than 3.0 feet forward from the center of the back wheels.

The equipment shall be of a size that will cut or plane at least 3.0 feet wide. It shall also be of a shape and dimension that does not encroach on traffic movement outside of the work area. The equipment shall be capable of grinding the surface without causing spalls at cracks, joints, or other locations.

907-804.03.19.7.4.1.2--Grinding. The grinding areas will be determined by the Contractor and approved by the Engineer. The Contractor shall develop and submit to the Engineer for approval a Grinding Plan. The Contractor shall allow up to 45 days for the Department to review the Plan prior to starting any grinding operations. This plan shall include as a minimum:

1) Name of the project superintendent in responsible charge of the grinding operation.
2) List and description of all equipment to be used.
3) Maximum depth of each pass allowed by the grinding equipment.
4) Maximum width of each pass allowed by the grinding equipment.
5) Details of a sequence of the grinding operation.
6) Complete data from Profilograph runs, based on a 0.3 inch bump height, for each wheel path over the entire bridge including bridge end slabs, which shall include profile index,

bump locations (in stations), bump heights and proposed final cross-slopes. When a computerized profilograph is used, a complete printout of the profile including the header information for each wheel path will be required.

7) Data showing reinforcing steel clearance in all areas to be ground.
8) A detailed drawing of the deck showing areas to be ground with station numbers and grinding depths clearly indicated.
9) A description of grinding in areas where drains are in conflict with grind areas.
10) Details of any changes in deck drainage, anticipated ponding, etc.

The Engineer will evaluate the grinding plan for conformance with the plans and specifications, after which the Engineer will notify the Contractor of any additional information required and/or changes that may be needed. Any part of the plan that is unacceptable will be rejected and the Contractor shall submit changes for reevaluation. All approvals given by the Engineer shall be subject to trial and satisfactory performance in the field, and shall not relieve the Contractor of the responsibility to satisfactorily complete the work.

The construction operation shall be scheduled and proceed in a manner that produces a uniform finished surface. Grinding will be accomplished in a manner that eliminates joint or crack faults while providing positive lateral drainage by maintaining a constant cross-slope between grinding extremities in each lane. Auxiliary or ramp lane grinding shall transition as required from the mainline edge to provide positive drainage and acceptable riding surface.

The operation shall result in a finished surface that conforms as close as possible to the typical cross-section and the requirements specified in Subsection 907-804.03.19.7.4.1.3.

The Contractor shall establish positive means for removal of grinding residue. Residue shall not be permitted to flow across lanes used by public traffic or into gutters or drainage facilities.

907-804.03.19.7.4.1.3--Final Surface Texture. The grinding process shall produce a finish surface that is as close as possible to grade and uniform in appearance with a longitudinal line type texture. The line type texture shall contain parallel longitudinal corrugations that present a narrow ridge corduroy type appearance. The peaks of the ridges shall be approximately 1/16 inch higher than the bottoms of the grooves with approximately 53 to 57 evenly spaced grooves per foot. Grinding chip thickness shall be a minimum of 0.080 inches thick.

The finished bridge decks and bridge end slabs shall be retested for riding quality using a Contractor furnished profilograph meeting the requirements of Subsection 907-804.03.19.7.5. The finished results shall meet the following conditions:

(a) Individual bumps or depressions shall not exceed 0.3 inches when measured from a chord length of 25 feet.
(b) The final index value for the bridge deck and bridge end slabs shall be an average of both the right and left wheel paths of each lane and shall not exceed 65 inches per mile.

The final profilogram will be furnished to the Engineer for informational purposes.

907-804.03.19.7.5--Profilograph Requirements. The smoothness of the bridge deck will be determined by using a California Profilograph to produce a profilogram (profile trace) at each designated location. The surface shall be tested and corrected to a smoothness index as described herein with the exception of those locations or specific projects that are excluded from a smoothness test with the profilograph.

The profilograph, furnished and operated by the Contractor under supervision of the Engineer, shall consist of a frame at least 25 feet in length supported upon multiple wheels having no common axle. The wheels shall be arranged in a staggered pattern so that no two wheels will simultaneously cross the same bump. A profile is to be recorded from the vertical movement of a sensing mechanism. This profile is in reference to the mean elevation of the contact points established by the support wheels. The sensing mechanism, located at the mid-frame, may consist of a single bicycle-type wheel or a dual-wheel assembly consisting of either a bicycle-type (pneumatic tire) or solid rubber tire vertical sensing wheel and a separate bicycle-type (pneumatic tire) longitudinal sensing wheel. The wheel(s) shall be of such circumference(s) to produce a profilogram recorded on a scale of one (1) inch equal to 25 feet longitudinally and one (1) inch equal to one (1) inch (full scale) vertically. Motive power may be provided manually or by the use of a propulsion unit attached to the center assembly. In operation, the profilograph shall be moved longitudinally along the pavement at a speed no greater than 3 MPH so as to reduce bounce as much as possible. The testing equipment and procedure shall comply with the requirements of Department SOP.

The Contractor may elect to use a computerized version of the profilograph in lieu of the standard profilograph. If the computerized version of the profilograph is used, it shall meet the requirements of Subsection 907-804.03.19.7.5.1.

907-804.03.19.7.5.1--Computerized Profilograph.

907-804.03.19.7.5.1.1--General The computerized profilograph, furnished and operated by the Contractor under the supervision of the Engineer, shall be equipped with an on-board computer capable of meeting the following conditions.

Vertical displacement shall be sampled every three (3) inches or less along the bridge deck. The profile data shall be bandpass filtered in the computer to remove all spatial wavelengths shorter than two (2) feet. This shall be accomplished by a third order, low pass Butterworth filter. The resulting band limited profile will then be computer analyzed according to the California Profilograph reduction process to produce the required inches per mile index. This shall be accomplished by fitting a linear regression line to the length of bridge. This corresponds to the perfect placement of the blanking band bar by a human trace reducer. Scallops above and below the blanking band are then detected and totaled according to the California protocol. Bump/Dip analysis shall take place according to the California Profilograph reduction process.

The computerized profilograph shall be capable of producing a plot of the profile and a printout which will give the following data: Stations every twenty five (25) feet, bump/dip height and bump/dip length of specification (3/10 of an inch and 25 feet respectively), the blanking band width, date of measurement, total profile index in inches per mile for the measurement, total length

of the measurement, and the raw inches for each segment.

907-804.03.19.7.5.1.2--Mechanical Requirements. The profilograph shall consist of a frame twenty five (25) feet long supported at each end by multiple wheels. The frame shall be constructed to be easily dismantled for transporting. The profilograph shall be constructed from aluminum, stainless steel and chromed parts. The end support wheels shall be arranged in a staggered pattern such that no two wheels cross a transverse joint at the same time. The relative smoothness shall be measured by the vertical movement of an eight (8) inch or larger diameter sensing wheel at the midpoint of the 25-foot frame. The horizontal distance shall be measured by a twenty (20) inch or larger diameter pneumatic wheel. This profile shall be the mean elevation referenced to the twelve points of contact with the pavement established by the support wheels. Recorded graphical trace of the profile shall be on a scale of one inch equals one inch (full scale) vertical motion of the sensing wheel and one inch equals 25 feet horizontal motion of the profilograph.

907-804.03.19.7.5.1.3--Computer Requirements. The computer shall have the ability to produce output on sight for verification. The computerized output shall indicate the profile index for each specified section of bridge deck. Variable low and high pass third-order Butterworth filtering options shall be available. The printout shall be capable of showing station marks automatically on the output. Blanking band positioning for each specified section of the bridge deck shall be placed according to the least squares fit line of the collected data. Variable bump and dip tests shall be available to show "must correct" locations on the printout. The computer must have the ability to display on screen "must correct" conditions and alert the user with an audible warning when a "must correct" location has been located. The computer must have the ability to store profile data for later reanalysis. The measurement program must be menu driven and PC compatible. User selected options, identification, calibration factors, and time and date stamps shall be printed at the top of each printed report for verification. The control software must be upgradeable. A power source shall be included for each profilograph and be capable of supplying all power needs for a full days testing.

907-804.03.19.8--Finishing Horizontal Surfaces of Footings or Top Slabs of Box Bridges, Culverts, or Other Structures. The finishing of horizontal surfaces of footing or top slabs of box bridges, culverts, or other structures shall be achieved by placing an excess of material in the form and removing or striking off the excess with a template, forcing the coarse aggregate below the mortar surface. After the concrete has been struck off the surface shall be given a Class 6 finish.

907-804.03.19.9--Finishing Exposed Surfaces of Sidewalks. After the concrete has been deposited in place it shall be consolidated and the exposed surface shall be given a Class 6 finish. An edging tool of the required radius shall be used on all edges and at all expansion joints. The surface shall have a granular texture which will not be slick when wet.

Sidewalk surfaces shall be laid out in blocks with an approved grooving tool as shown on the plans or as directed.

907-804.03.20--Opening Bridges.

907-804.03.20.1--Public Traffic. Unless otherwise specified, concrete bridge decks shall be closed to public highway traffic for a period of at least 21 days after placing concrete.

907-804.03.20.2--Construction Traffic. Unless otherwise specified, concrete bridge decks shall be closed to construction traffic for the time required for curing in Subsection 907-804.03.17 and the minimum required compressive strength for the concrete placed is obtained.

907-804.03.21--Final Cleanup. Upon completion of the work all equipment, surplus materials, forms, and waste material shall be removed, the bridge cleaned, and the site of the work given a final cleanup.

907-804.03.22--Precast-Prestressed Concrete Bridge Members.

907-804.03.22.1--General. All installations and plants for the manufacture of precast-prestressed bridge members shall be PCI (Precast / Prestressed Concrete Institute) Certified. Bridge members manufactured in plants or installations not so approved will not be accepted for use in the work. The Contractor or other manufacturer shall employ a technician skilled in the adopted system of prestressing to supervise the manufacturing operations. This technician shall be certified according to the guidelines of this specification. The Contractor shall develop and implement a Quality Control Program as per Division I of PCI Quality Control Manual, 4th Edition. The Quality Control Program shall be submitted to the District Materials Engineer for approval.

907-804.03.22.2--Stressing Requirements. The jacks for stressing shall be equipped with accurate calibrated gauges for registering the jacking pressure. Means shall be provided for measuring elongation of strands to at least the nearest 1/16 inch.

Prior to beginning work, the Contractor or manufacturer shall have all jacks to be used, together with their gauges, calibrated by an approved laboratory. All jacks and gauges shall have an accuracy of reading within two percent. The testing agency shall furnish the Engineer a statement certifying that the jacks and gauges meet this requirement. During the progress of the work, if a gauge appears to be giving erratic results or if the gauge pressure and elongations indicate materially differing stresses, recalibration will be required.

Calibration of jacks and gauges shall be repeated at intervals deemed necessary by the Engineer. These intervals for calibration shall not exceed one year.

Shop drawings of prestressed beams, including an erection plan, shall be submitted in duplicate to the Bridge Engineer for approval prior to manufacture of members.

907-804.03.22.2.1--Methods. Plans for the particular bridge members will show prestressing by one of the following methods:

(A) Pretensioning. The prestressing strands are stressed initially. After the concrete is placed, cured, and has attained the compressive strength shown on the plans, the stress is transferred to the member. The method used for pretensions shall be in accordance to Division V of PCI Quality Control Manual, 4th Edition.

(B) Posttensioning. The posttensioning tendons are installed in voids or ducts and are stressed and anchored after development of the compressive strength specified on the plans. The voids or ducts are then pressure grouted.

(C) Combined Method. Part of the reinforcing is pretensioned and part posttensioned. Under this method all applicable requirements for the two methods specified shall apply to the respective stressing elements being used.

907-804.03.22.2.2--Alternate Details for Prestressed Members. In the event that the Contractor / Manufacturer desires to use materials or methods that differ in any respect from those shown on the plans or described in these specifications, the Contractor shall submit for approval full plan details on acceptable tracings suitable for reproduction and specifications which shall become the property of the Department. In order for alternate materials and/or methods to be considered, they will be required to comply fully with the following:

A. Provisions equal to those stipulated in these specifications.
B. Current AASHTO Specifications.
C. Recommendations of materials manufacturer.
D. Camber tolerance of beams and spans shown on plans.

Note: Alternate materials and methods will not be authorized on Federal-Aid Projects.

The Engineer shall be the sole judge as to the adequacy and propriety of any variation of materials or methods.

907-804.03.22.2.3--Stressing Procedure.

(A) General. Stressing shall be performed by suitable jacks working against unyielding anchorages and capable of maintaining the required stress for an indefinite period without movement or yielding. Strands may be stressed singularly or in a group.

The tension to be applied to each strand shall be as shown on the plans. The tension shall be measured by both jacking gauges and elongations in the strands and the result shall check within close limits.

It is anticipated that there will possibly be a difference in indicated tension between jack pressure and elongation of about five (5) percent. In this event, the discrepancy shall be placed on the side of slight overstress rather than understress.

In the event of an apparent discrepancy between gauge pressure and elongation of as much as five (5) percent, the entire operation shall be carefully checked, and the source of error determined before proceeding further.

Elongation is to be measured after the strands have been suitably anchored, and all possible slippage at the anchorages has been eliminated.

In all stressing operations, the stressing force shall be kept as nearly symmetrical about the vertical axis of the member as practicable.

(B) Pretensioning. All strands to be prestressed shall be brought to a uniform initial tension prior to being given their full pretensioning. This uniform initial tension of approximately 1000 to 2000 pounds shall be measured by suitable means such as a dynamometer so that its value can be used as a check against elongation computed and measured.

After the initial tensioning, the strand or group shall be stressed until the required elongation and jacking pressure is within the limits specified.

When the strands are stressed in accordance with the plan requirements and these specifications and all other reinforcing is in place, the concrete shall be placed in the prepared forms.

Strand stress shall be maintained until the concrete between anchorages has attained the required compressive strength as determined by cylinder tests, after which the strands shall be cut off flush with the ends of column members, and cut as shown on the plans for beams, girders, etc. Strands shall be cut or released in such a manner that eccentricity of prestress will be kept to a minimum and no damage to the member will result. The strand cutting pattern shall be as shown on the plans or as approved by the Bridge Engineer.

(C) Posttensioning. For all posttensioning tendons/bars the anchor plates shall set exactly normal in all directions to the axis of the tendon/bar. Parallel wire anchorage cones shall be recessed within the beams. Tensioning shall not take place until the concrete has reached the compressive strength shown on the plans.

Elongation and jacking pressures shall make appropriate allowance for all possible slippage or relaxation of the anchorage. Posttensioning tendons/bars shall be stressed in the order and manner shown on the plans.

The units shall be tensioned until the required elongations and jacking pressures are attained and reconciled within the limits specified in Subsection 907-804.03.22.2.3(A) with such overstresses as approved by the Engineer for anchorage relaxation.

Independent references shall be established adjacent to each anchorage to indicate any yielding or slippage that may occur between the time of initial stressing and final release of the strands.

Straight tendons/bars may be tensioned from one end. Unless otherwise specified, curved tendons shall be stressed by jacking from both ends of the tendons.

(D) Combined Method. In the event that girders are manufactured with part of the reinforcement pretensioned and part posttensioned, the applicable portions of the requirements listed herein shall apply to each type.

907-804.03.22.3--Manufacture.

907-804.03.22.3.1--Forms. The forms used for precast-prestressed bridge members shall meet the requirements of Division II of the PCI Quality Control Manual, 4th Edition.

907-804.03.22.3.2--Placing and Fastening Steel. Placing and fastening of all steel used for precast-prestressed bridge members shall meet the requirements of Division V of the PCI Quality Control Manual, 4th Edition.

907-804.03.22.3.3--Holes for Prestressing Tendons/Bars. Holes provided in girders for prestressing tendons/bars shall be formed by means of inflatable rubber tubing, flexible metal conduit, metal tubing, or other approved means.

907-804.03.22.4--Placing and Curing Concrete.

907-804.03.22.4.1--Placing. The placing of concrete shall meet the applicable requirements of Division III of PCI Quality Control Manual, 4th Edition.

907-804.03.22.4.2--Curing. Initial and accelerated curing of all members shall meet the applicable requirements of Division IV of PCI Quality Control Manual, 4th Edition except for the following listed requirements.

The source of heat for accelerated cure shall be steam. Calibrated thermocouples shall be implanted into the concrete members to monitor areas expected to have maximum and minimum heat. Curing methods and procedures listed in the prestress producer's PCI Quality System Manual shall be approved by the Department before their implementation.

907-804.03.22.4.3--Removal of Side Forms. Side forms may be removed after the concrete has attained sufficient strength to maintain a true section. In order to obtain "sufficient strength", it may be necessary to cure members for 12 hours or more as prescribed in Subsection 907-804.03.22.4.2, or to attain a minimum compressive strength of 1000 psi.

If high-early-strength concrete is obtained by use of low slump (0 to 1.5-inch) concrete, vacuum process, or other approved methods, side forms may be removed earlier; however, approval of the methods and revision from normal schedules will be made only after inspections by the District Materials Engineer and Materials Division have determined that satisfactory results will be attained by the methods and schedules proposed.

907-804.03.22.4.4--Grouting. The holes through posttensioned members in which the tendons are installed shall be equipped with approved grouting vents. All prestressing tendons to be bonded shall be free of dirt, loose rust, grease, or other deleterious substances. Before grouting, the ducts shall be free of water, dirt, and other foreign substances. The ducts shall be blown out with compressed air until no water comes through the ducts. For long members with draped tendons an open tap at low points may be necessary. After completion of stressing, the annular space between sides of tendon and sides of hole shall be grouted as set in the following paragraphs.

With the grouting vent open at one end of the core hole, grout shall be applied continuously under moderate pressure at the other end until all entrapped air is forced out through the open grout vent, as evidenced by a steady stream of grout at the vent. Whereupon, the open vent shall be closed under pressure. The grouting pressure shall be gradually increased to a refusal of at least 75 psi and held at this pressure for approximately 10 seconds, and the vent shall then be closed under this pressure.

Portland cement grout shall consist of a mixture of:

1	part Type 1 portland cement
1/4	part fly ash
3/4	part washed sand *
4 to 6	gallons of water per bag of cement.

* all passing No. 16 sieve and not more than 5% retained on No. 30

Water-reducing admixtures, subject to approval by the Engineer, shall be used in accordance with the manufacturer's recommendations.

The grout shall be mixed in a mechanical mixer, shall have the consistency of heavy paint, and shall be kept agitated until placed.

Members shall not be moved before the grout has set, ordinarily at least 24 hours at 80°F or higher.

907-804.03.22.5--Finishing and Marking. Units shall be given a Class 1 finish at the plant and shall be given a Class 2 finish after erection when required.

Recesses in girders at end of diaphragm bars, holes left by form ties, and other surface irregularities shall be carefully cleaned and patched with an approved non-shrink commercial grout or a non-shrinkage mortar of the following composition:

1 part Type 1 portland cement
1 1/2 to 2 parts fine sand
1/2 to 3/4 ounces aluminum powder per bag of cement
Approved admixture per Subsection 713.02.
Sufficient water to produce a workable but rather stiff mix.

The units shall be clearly marked in accordance with Department's *Materials Division Inspection, Certification and Testing Manual*.

907-804.03.22.6--Handling, Storage, and Installation. Posttensioned members may be handled immediately after completion of stressing and grout has set. Pretensioned members may be handled immediately after release of tensioning. In either case, the members shall have developed a minimum compressive strength of 4000 psi prior to handling. In the event stressing is not done in a continuous operation, members shall not be handled before they are sufficiently stressed, as determined by the Engineer, to sustain all forces and bending moments due to handling. In the

handling, storage, and transporting of beams or girders, they shall be maintained in an upright position (position as cast) at all times and shall be picked up from points within distance from beam ends equal to beam depth or at pick-up points designated on the plans. Disregard of this requirement and dropping of units may be cause for rejection, whether or not injury to the unit is apparent. Piles shall be picked up and loaded for shipment at points shown by the suspension diagram on the plans. Extreme care shall be used in handling and storing piles to prevent damage. The dropping of a pile may be cause for rejection of same, whether or not there is apparent injury to the member.

Care shall be exercised during the storage, hoisting, and handling of precast units to prevent damage. Damaged units shall be replaced by the Contractor at no additional costs to the State.

When members are stacked for storage, each layer shall be supported at or near the pick-up points. Supports shall be carefully placed in a vertical line in order that the weight of any member will not stress an underlying member. To prevent damage in moving members it is suggested that rigid supports be covered with a cushion of wood or other resilient material.

Members shall not be transported until at least one day after the concrete has reached a compressive strength of 5000 psi or greater strength when shown on the plans.

Piles used in salt water shall not be driven until concrete is seven days old, and air-entrained concrete shall be used in such piles.

After prestressed concrete voided slab units are set, doweled and bolted in their final position the keyways and dowel holes shall be filled with an approved non-shrink grout. Traffic shall not be permitted on the spans for 24 hours after grouting, and heavy construction equipment exceeding 15 tons will not be permitted on the spans for a period of 72 hours after grouting.

Adjacent slab units that mismatch more than one-fourth inch shall be adjusted prior to grouting of the shear keys. The maximum deviation from cross-section and grade (exclusive of camber) at any point shall not exceed one-fourth inch; and when the surface is checked with a ten-foot straightedge applied both parallel and perpendicular to the centerline, the variance shall not exceed one-fourth inch.

In addition to the requirements set out in this section, the applicable requirements of Section 803 shall apply.

907-804.03.22.7--Tolerances for Accepting Precast Prestressed Concrete. Member shall meet the dimension tolerances set by Division VII of PCI Quality Control Manual, 4th Edition.

907-804.03.22.8--Testing of Materials. Concrete and aggregate testing shall meet the requirements of Division VI of PCI Quality Control Manual, 4th Edition, except that the concrete mixture design shall meet the requirements of Subsection 907-804.02.10. Also, in addition to concrete compressive tests samples made for detensioning and 28-day strength, test samples shall be made and tested in order to prove compliance to the requirements of Subsection 907-804.03.22.6 for handling and shipping prestressed members. Compressive strength test cylinders

for detensioning, handling and shipping shall receive the same type curing as the prestressed members for which they represent. Compressive strength samples shall be made each day for each prestress casting bed.

907-804.03.22.9--Testing Personnel. Technicians testing portland cement concrete used in the production of precast-prestressed members shall be PCI Quality Control Technician/Inspector Certified. Each producer of precast-prestressed members shall have at least one PCI Level II certified technician on site during production for Department projects.

907-804.03.22.10--Documentation. The Precast-Prestressed Producer for each precast-prestressed concrete bridge member shall maintain documentation as set forth in the Department's *Materials Division Inspection, Certification and Testing Manual*. Testing and inspection record forms shall be approved by the Central Laboratory and as a minimum contain information listed in Division VI of PCI Quality Control Manual, 4th Edition.

907-804.03.22.11--Use in the Work. Before any precast-prestressed member is incorporated into the work, documentation as described in Subsection 907-804.03.22.10 is required along with visual inspection of the member at the bridge construction site. Project Office personnel as per the Department's *Materials Division Inspection, Certification and Testing Manual* will make visual inspection of the precast-prestressed member at the bridge construction site.

907-804.04--Method of Measurement. Concrete, complete and accepted, will be measured in cubic yards. The concrete volume will be computed from the neat dimensions shown on the plans, except for such variations as may be ordered in writing by the Engineer. The quantity of concrete involved in fillets, scorings, and chamfers one square inch or less in cross-sectional area will be neglected. Deductions shall be made for the following:

(1) The volume of structural steel, including steel piling encased in concrete.
(2) The volume of timber piles encased in concrete, assuming the volume to be 0.80 cubic foot per linear foot of pile.
(3) The volume of concrete piles encased in concrete.

No deduction will be made for the volume of concrete displaced by steel reinforcement, floor drains, or expansion joint material that is one inch or less in width normal to the centerline of the joint. Where railing is bid as a separate item, that portion of the railing above the top of the curb, above the surface of the sidewalk, or above the bridge roadway, as the case may be, will not be included in the measurement of concrete, but will be measured as railing. Massive pylons or posts which are to be excepted from payment for railing and are intended to be measured for as concrete will be so noted on the plans.

When shown on the plans or directed by the Engineer, concrete placed as a seal for cofferdams will be measured by the cubic yard actually in place, except that no measurement will be made of seal concrete placed outside of an area bounded by vertical planes 18 inches outside the neat lines of the footing as shown on the plans or as directed and parallel thereto.

Reinforcing steel will be measured and paid for in pounds as set out in Section 805.

Unless otherwise specified, structural steel will be measured and paid for as set out in Section 810.

Excavation for bridges will be measured and paid for as in Section 801.

Piling will be measured and paid for as set out in Sections 802 and 803.

Railing will be measured and paid for as set out in Section 813.

Prestressed concrete beams and plank will be measured by the linear foot.

Prestressed concrete voided slab units, interior and exterior with railing, and precast concrete caps, intermediate and end cap with winged abutment wall, of the size and type specified will be measured by the unit complete in place and accepted. Railing, winged abutment walls, grout, tie rods, nuts, washers, bearing pads and other appurtenances will not be measured for separate payment.

907-804.05--Basis of Payment. Concrete will be paid for at the contract unit price per cubic yard for the class or classes specified, complete in place. Prestressed concrete beams and plank will be paid for at the contract unit per linear foot of specified size and type.

Prestressed concrete voided slab units and precast caps will be paid for at the contract unit price per each for the specified types and sizes, complete in place and accepted; which price shall be full compensation for furnishing, hauling and erecting the members; including all prestressing reinforcement and other reinforcement in the members. Payment at the contract unit prices bid shall be full compensation for furnishing all materials, equipment, tools, labor and incidentals necessary to complete the work.

Payment will be made under:

907-804-A:	Bridge Concrete, Class ____	- per cubic yard
907-804-B:	Box Bridge Concrete, Class ___	- per cubic yard
907-804-C:	Length Prestressed Concrete Beam, Type ___	- per linear foot
907-804-D:	Length Prestressed Concrete Plank	- per linear foot
907-804-E:	Length Prestressed Concrete Voided Slab, Size Interior	- per each
907-804-F:	Length Prestressed Concrete Voided Slab, Size Exterior	- per each
907-804-G:	Length Precast Concrete Caps, End Unit with Wall	- per each
907-804-H:	Length Precast Concrete Caps, Intermediate Unit	- per each

MISSISSIPPI DEPARTMENT OF TRANSPORTATION

SPECIAL PROVISION NO. 907-815-2 **CODE: (SP)**

DATE: 06/03/2014

SUBJECT: Sediment Control Stone

Section 815, Riprap And Slope Paving, of the 2004 Edition of the Standard Specifications for Road and Bridge Construction, is hereby amended as follows.

907-815.02--Materials. Delete the last paragraph of Subsection 815.02 on page 966, and substitute the following.

Material used for sediment control stone shall be crushed stone or gravel meeting the requirements of Subsection 703.03 for Size No. 57.

907-815.05--Basis of Payment. Delete pay item 815-F on page 970 and substitute the following.

907-815-F: Sediment Control Stone - per cubic yard or ton

S E C T I O N 9 0 5 - P R O P O S A L

Date _____

Mississippi Transportation Commission
Jackson, Mississippi

Sirs: The following proposal is made on behalf of _____
_____ of _____
_____
for constructing the following designated project(s) within the time(s) hereinafter specified.

The plans are composed of drawings and blue prints on file in the offices of the Mississippi Department of Transportation, Jackson, Mississippi.

The Specifications are the current Standard Specifications of the Mississippi Department of Transportation approved by the Federal Highway Administration, except where superseded or amended by the plans, Special Provisions and Notice(s) to Bidders attached hereto and made a part thereof.

I (We) certify that I (we) possess a copy of said Standard and any Supplemental Specifications.

Evidence of my (our) authority to submit the Proposal is hereby furnished. The proposal is made without collusion on the part of any person, firm or corporation. I (We) certify that I (we) have carefully examined the Plans, the Specifications, including the Special Provisions and Notice(s) to Bidders, herein, and have personally examined the site of the work. On the basis of the Specifications, Special Provisions, Notice(s) to Bidders, and Plans, I (we) propose to furnish all necessary machinery, tools, apparatus and other means of construction and do all the work and furnish all the materials in the manner specified. I (We) understand that the quantities mentioned herein are approximate only and are subject to either increase or decrease, and hereby propose to perform any increased or decreased quantities of work at the unit prices bid, in accordance with the above.

I (We) acknowledge that this proposal will be found irregular and/or non-responsive unless a certified check, cashier's check, or Proposal Guaranty Bond in the amount as required in the Advertisement (or, by law) is submitted electronically with the proposal or is delivered to the Contract Administration Engineer prior to the bid opening time specified in the advertisement.

INSTRUCTION TO BIDDERS: Alternate and Optional Items on Bid Schedule.

1. Two or more items entered opposite a single unit quantity WITHOUT DEFINITE DESIGNATION AS "ALTERNATE ITEMS" are considered as "OPTIONAL ITEMS". Bidders may or may not indicate on bids the Optional Item proposed to be furnished or performed WITHOUT PREJUDICE IN REGARD TO IRREGULARITY OF BIDS.
2. Items classified on the bid schedule as "ALTERNATE ITEMS" and/or "ALTERNATE TYPES OF CONSTRUCTION" must be preselected and indicated on bids. However, "Alternate Types of Construction" may include Optional Items to be treated as set out in Paragraph 1, above.
3. Optional items not preselected and indicated on the bid schedule MUST be designated in accordance with Subsection 102.06 prior to or at the time of execution of the contract.
4. Optional and Alternate items designated must be used throughout the project.

I (We) further propose to perform all "force account or extra work" that may be required of me (us) on the basis provided in the Specifications and to give such work my (our) personal attention in order to see that it is economically performed.

I (We) further propose to execute the attached contract agreement (Section 902) as soon as the work is awarded to me (us), and to begin and complete the work within the time limit(s) provided for in the Specifications and Advertisement. I (We) also propose to execute the attached contract bond (Section 903) in an amount not less than one hundred (100) percent of the total of my (our) part, but also to guarantee the excellence of both workmanship and materials until the work is finally accepted.

I (We) shall submit electronically with our proposal or deliver prior to the bid opening time a certified check, cashier's check or bid bond for **five percent (5%) of total bid** and hereby agree that in case of my (our) failure to execute the contract and furnish bond within Ten (10) days after notice of award, the amount of this check (bid bond) will be forfeited to the State of Mississippi as liquidated damages arising out of my (our) failure to execute the contract as proposed. It is understood that in case I am (we are) not awarded the work, the check will be returned as provided in the Specifications.

For Informational Purposes Only

SECTION 905 -- PROPOSAL (CONTINUED)

I (We) hereby certify by digital signature and electronic submission via Bid Express of the Section 905 proposal below, that all certifications, disclosures and affidavits incorporated herein are deemed to be duly executed in the aggregate, fully enforceable and binding upon delivery of the bid proposal. I (We) further acknowledge that this certification shall not extend to the bid bond or alternate security which must be separately executed for the benefit of the Commission. This signature does not cure deficiencies in any required certifications, disclosures and/or affidavits. I (We) also acknowledge the right of the Commission to require full and final execution on any certification, disclosure or affidavit contained in the proposal at the Commission's election upon award. Failure to so execute at the Commission's request within the time allowed in the Standard Specifications for execution of all contract documents will result in forfeiture of the bid bond or alternate security.

Respectfully Submitted,

DATE _____

_____
Contractor

BY _____
Signature

TITLE _____

ADDRESS _____

CITY, STATE, ZIP _____

PHONE _____

FAX _____

E-MAIL _____

(To be filled in if a corporation)

Our corporation is chartered under the Laws of the State of _____ and the names, titles and business addresses of the executives are as follows:

_____
President Address

_____
Secretary Address

_____
Treasurer Address

The following is my (our) itemized proposal.

For Informational Purposes Only

Upgrade and Repair of SR 552, known as State Project No. SP-0303-00(012) / 107179301 in Claiborne County.

Line no.	Item Code	Adj Code	Quantity	Units	Description[Fixed Unit Price]
					Roadway Items
0010	201-A001		1	Lump Sum	Clearing and Grubbing
0020	202-B041		400	Linear Feet	Removal of Fence, All Types
0030	202-B064		150	Linear Feet	Removal of Pipe, 8" And Above
0040	202-B077		7	Each	Removal of Trees Greater Than 6"
0050	202-B078		620	Square Yard	Removal of Pavement, All Types and Depths
0060	202-B094		20	Linear Feet	Removal of Curb &/or Curb and Gutter, All Types
0070	203-A003	(E)	34,000	Cubic Yard	Unclassified Excavation, FM, AH
0080	203-EX017	(E)	26,000	Cubic Yard	Borrow Excavation, AH, FME, Class B9
0090	206-A001	(S)	1,200	Cubic Yard	Structure Excavation
0100	209-A004		3,300	Square Yard	Geotextile Stabilization, Type V, Non-Woven Type 2
0110	211-A001		22,000	Square Yard	Topsoil for Slope Treatment, From Right-of-Way
0120	211-D001	(E)	30	Cubic Yard	Topsoil for Plant Pits, Contractor Furnished
0130	213-C001		3	Ton	Superphosphate
0140	219-A001		120	Thousand Gallon	Watering ($20.00)
0150	220-A001		5	Acre	Insect Pest Control ($30.00)
0160	232-A002		1	Thousand	Fertilizer for Woody Plant Material, Tablet, 21 gram
0170	602-A001	(S)	4,625	Pounds	Reinforcing Steel
0180	603-CA002	(S)	632	Linear Feet	18" Reinforced Concrete Pipe, Class III
0190	603-CA005	(S)	472	Linear Feet	36" Reinforced Concrete Pipe, Class III
0200	603-CB001	(S)	4	Each	18" Reinforced Concrete End Section
0210	603-CE002	(S)	742	Linear Feet	29" x 18" Concrete Arch Pipe, Class A III
0220	603-CE004	(S)	104	Linear Feet	44" x 27" Concrete Arch Pipe, Class A III
0230	603-CF002	(S)	3	Each	29" x 18" Concrete Arch Pipe End Section
0240	603-CF004	(S)	1	Each	44" x 27" Concrete Arch Pipe End Section
0250	604-B001		7,842	Pounds	Gratings
0260	607-B009		950	Linear Feet	72" Type I Chain Link Fence, Class I
0270	608-A001	(S)	1,400	Square Yard	Concrete Sidewalk, Without Reinforcement
0280	609-D006	(S)	5,566	Linear Feet	Combination Concrete Curb and Gutter Type 1 Modified
0290	609-D007	(S)	176	Linear Feet	Combination Concrete Curb and Gutter Type 2 Modified
0300	616-A001	(S)	170	Square Yard	Concrete Median and/or Island Pavement, 4-inch
0310	619-A1001		2,700	Linear Feet	Temporary Traffic Stripe, Continuous White
0320	619-A2001		2,700	Linear Feet	Temporary Traffic Stripe, Continuous Yellow
0330	619-D4001		376	Square Feet	Directional Signs
0340	620-A001		1	Lump Sum	Mobilization
0350	625-E001		15,576	Linear Feet	Detail Traffic Stripe

For Informational Purposes Only

Line no.	Item Code	Adj Code	Quantity	Units	Description[Fixed Unit Price]
0360	625-F001		242	Square Feet	Legend
0370	627-J001		24	Each	Two-Way Clear Reflective High Performance Raised Markers
0380	627-K001		50	Each	Red-Clear Reflective High Performance Raised Markers
0390	627-L001		108	Each	Two-Way Yellow Reflective High Performance Raised Markers
0400	630-A001		51	Square Feet	Standard Roadside Signs, Sheet Aluminum, 0.080" Thickness
0410	630-A002		75	Square Feet	Standard Roadside Signs, Sheet Aluminum, 0.125" Thickness
0420	630-C004		390	Linear Feet	Steel U-Section Posts, 3.0 to 3.5 lb/ft
0430	630-D003		309	Linear Feet	Structural Steel Beams, W6 x 9
0440	630-E001		314	Pounds	Structural Steel Angles & Bars, 3" x 3" x 1/4" Angles
0450	647-A003		2	Each	Pullbox, Type 4
0460	668-A016		4,250	Linear Feet	Traffic Signal Conduit, Underground, Type 4, 1"
0470	668-A018		1,560	Linear Feet	Traffic Signal Conduit, Underground, Type 4, 2"
0480	682-A009		1,360	Linear Feet	Underground Branch Circuit, AWG 10, 3 Conductor
0490	682-A016		6,560	Linear Feet	Underground Branch Circuit, AWG 2, 4 Conductor
0500	682-A031		1,320	Linear Feet	Underground Branch Circuit, AWG 6, 3 Conductor
0510	682-A036		7,260	Linear Feet	Underground Branch Circuit, AWG 8, 3 Conductor
0520	682-B018		30	Linear Feet	Underground Branch Circuit, Jacked or Bored, AWG 2, 4 Conductor
0530	682-B036		290	Linear Feet	Underground Branch Circuit, Jacked or Bored, AWG 8, 3 Conductor
0540	682-D001		4	Each	Underground Pull Box
0550	682-F001		2	Each	Secondary Power Controllers
0560	684-A003		18	Cubic Yard	Pole Foundation, 24" Diameter
0570	684-A007		107	Cubic Yard	Pole Foundation, 30" Diameter
0580	809-A005	(S)	4,000	Square Feet	Modular Block Retaining Wall System
0590	907-216-B001		15,000	Square Yard	Solid Sodding, Centipede
0600	907-225-A001		4	Acre	Grassing
0610	907-225-B001		18	Ton	Agricultural Limestone
0620	907-225-C001		12	Ton	Mulch, Vegetative Mulch
0630	907-228-A002		300	Square Yard	Erosion Control Blanket, Type II
0640	907-230-B002		19	Each	Tree Planting, Bald Cypress
0650	907-230-B022		18	Each	Tree Planting, Drake Elm
0660	907-230-B026		18	Each	Tree Planting, Nutall Oak
0670	907-230-B034		11	Each	Tree Planting, Tulip Poplar
0680	907-230-B047		17	Each	Tree Planting, Live Oak
0690	907-230-B069		19	Each	Tree Planting, Red Maple
0700	907-230-B101		28	Each	Tree Planting, Chaste Tree
0710	907-233-A001		15	Cubic Yard	Tree Bark Mulch, Type III

For Informational Purposes Only

Line no.	Item Code	Adj Code	Quantity	Units	Description[Fixed Unit Price]
0720	907-233-A002		25	Cubic Yard	Tree Bark Mulch, Type V
0730	907-234-C002		8,000	Linear Feet	Super Silt Fence
0740	907-237-A003		600	Linear Feet	Wattles, 20"
0750	907-240-A001		660	Square Yard	Interlocking Flexible Block Erosion Control System
0760	907-246-B002		500	Each	Rockbags
0770	907-249-A001		300	Ton	Riprap for Erosion Control
0780	907-258-G001		1	Each	Travel Trailer Sewage Dump Station
0790	907-258-PP006		330	Linear Feet	Handrail
0800	907-258-PP026		10	Each	Car Stop
0810	907-262-A003	(S)	4,300	Linear Feet	6" PVC Pipe, C-900, Class 100
0820	907-265-C002		5,500	Pounds	Ductile Iron Fittings
0830	907-265-D003		13	Each	6" Gate Valve and Value Box
0840	907-265-F001		2	Each	Fire Hydrant Assembly
0850	907-265-J004		66	Each	Water Service Connections
0860	907-265-L001	(S)	2,300	Linear Feet	1" Diameter Water Service Line
0870	907-265-O005		1	Each	6"x6" Tapping Sleeve & 6" Valve
0880	907-282-PP001		66	Each	Water Meter Box, Per Plans
0890	907-282-PP003		130	Each	Slow Release Irrigation Bag, Per Plans
0900	907-304-C002	(GY)	2,400	Cubic Yard	Granular Material, AEA, Class 5, Group D
0910	907-403-A017	(BA1)	3,000	Ton	9.5-mm, ST, Asphalt Pavement
0920	907-403-A018	(BA1)	3,300	Ton	12.5-mm, ST, Asphalt Pavement
0930	907-403-A019	(BA1)	4,300	Ton	19-mm, ST, Asphalt Pavement
0940	907-406-A001		300	Square Yard	Cold Milling of Bituminous Pavement, All Depths
0950	907-407-A001	(A2)	330	Gallon	Asphalt for Tack Coat
0960	907-501-A002	(C)	7,000	Square Yard	6" Reinforced Cement Concrete Pavement, Broom Finish
0970	907-601-B003	(S)	71	Cubic Yard	Class "B" Structural Concrete, Minor Structures
0980	907-607-PP005		1	Each	Gate, Barrier Fence, Per Plans Type 1
0990	907-607-PP005		1	Each	Gate, Barrier Fence, Per Plans Type 2
1000	907-607-PP014		4	Each	Masonry Column, Per Plans
1010	907-618-A001		1	Lump Sum	Maintenance of Traffic
1020	907-625-E002		453	Linear Feet	Detail Traffic Stripe, Blue-ADA
1030	907-625-F003		62	Square Feet	Legend, Blue-ADA
1040	907-626-B003		1,574	Linear Feet	6" Thermoplastic Traffic Stripe, Continuous White
1050	907-626-C008		2,553	Linear Feet	6" Thermoplastic Edge Stripe, Continuous White
1060	907-626-E003		4,994	Linear Feet	6" Thermoplastic Traffic Stripe, Continuous Yellow
1070	907-626-G004		658	Linear Feet	Thermoplastic Detail Stripe, White
1080	907-626-G005		2,155	Linear Feet	Thermoplastic Detail Stripe, Yellow

For Informational Purposes Only

Line no.	Item Code	Adj Code	Quantity	Units	Description[Fixed Unit Price]
1090	907-626-H004		661	Linear Feet	Thermoplastic Legend, White
1100	907-626-H005		340	Square Feet	Thermoplastic Legend, White
1110	907-682-F002		10	Each	Secondary Power Controllers, Per Plans
1120	907-682-J001		66	Each	RV Campground Electrical Pedestal
1130	907-683-B020		8	Each	Lighting Assembly, Low Mast, LED, Type 40-4-0-220
1140	907-683-B021		35	Each	Lighting Assembly, Low Mast, LED, Type 40-1-10-220
1150	907-683-B022		20	Each	Lighting Assembly, Low Mast, LED, Type 15-1-0-90
1160	907-699-A002		1	Lump Sum	Roadway Construction Stakes
1170	907-815-F002	(S)	100	Cubic Yard	Sediment Control Stone
				ALTERNATE GROUP AA NUMBER 1	
1180	907-304-F002	(GT)	7,500	Ton	Size 610 Crushed Stone Base
				ALTERNATE GROUP AA NUMBER 2	
1190	907-304-F003	(GT)	7,500	Ton	3/4" and Down Crushed Stone Base
				ALTERNATE GROUP AA NUMBER 3	
1200	907-304-F004	(GT)	7,500	Ton	Size 825B Crushed Stone Base

For Informational Purposes Only

CONDITIONS FOR COMBINATION BID

If a bidder elects to submit a combined bid for two or more of the contracts listed for this month's letting, the bidder must complete and execute these sheets of the proposal in each of the individual proposals to constitute a combination bid. In addition to this requirement, each individual contract shall be completed, executed and submitted in the usual specified manner.

Failure to execute this Combination Bid Proposal in each of the contracts combined will be just cause for each proposal to be received and evaluated as a separate bid.

It is understood that the Mississippi Transportation Commission not only reserves the right to reject any and all proposals, but also the right to award contracts upon the basis of lowest separate bids or combination bids most advantageous to the State.

It is further understood and agreed that the Combination Bid Proposal is for comparison of bids only and that each contract shall operate in every respect as a separate contract in accordance with its proposal and contract documents.

I (We) agree to complete each contract on or before its specified completion date.

* * * *

SECTION 905 - COMBINATION BID PROPOSAL (Continued)

Project Number	Pay Item Number	Unit	Unit Price Reduction	Total Item Reduction	Total Contract Reduction
1.					
2.					
3.					
4.					
5.					
6.					
7.					
8.					

For Informational Purposes Only

Project Number	Pay Item Number	Unit	Unit Price Reduction	Total Item Reduction	Total Contract Reduction
9. _____	_____ _____	_____ _____	_____ _____	_____ _____	
10. _____	_____ _____	_____ _____	_____ _____	_____ _____	

(c) If Combination C has been selected, then initial and complete ONE of the following.

_____ I (We) desire to be awarded work not to exceed a total monetary value of $ _____.

_____ I (We) desire to be awarded work not to exceed _____ number of contracts.

For Informational Purposes Only

TO: EXECUTIVE DIRECTOR, MISSISSIPPI DEPARTMENT OF TRANSPORTATION
JACKSON, MISSISSIPPI

CERTIFICATE

If awarded this contract, I (we) contemplate that portions of the contract will be sublet. I (we) certify that those subcontracts which are equal to or in excess of fifty thousand dollars ($50,000.00) will be in accordance with regulations promulgated and adopted by the Mississippi State Board of Contractors on September 8, 2011.

I (we) agree that this notification of intent DOES NOT constitute APPROVAL of the subcontracts.

(Individual or Firm)	(Address)
(Individual or Firm)	(Address)
(Individual or Firm)	(Address)
(Individual or Firm)	(Address)

NOTE: Failure to complete the above DOES NOT preclude subsequent subcontracts. Subsequent subcontracts, if any, equal to or in excess of fifty thousand dollars ($50,000.00) will be in accordance with regulations promulgated and adopted by the Mississippi State Board of Contractors on September 8, 2011.

Contractor _____

For Informational Purposes Only

MISSISSIPPI DEPARTMENT OF TRANSPORTATION

CERTIFICATION

I,_____,
(Name of person signing bid)

individually, and in my capacity as_____ of
(Title of person signing bid)

_____
(Name of Firm, partnership, or Corporation)

do hereby certify under penalty of perjury under the laws of the United States and the State of Mississippi

that_____, Bidder
(Name of Firm, Partnership, or Corporation)

on Project No. **SP-0303-00(012)/107179301**

in **Claiborne** County(ies), Mississippi, has not either directly or indirectly entered into any agreement, participated in any collusion; or otherwise taken any action in restraint of free competitive bidding in connection with this contract; nor have any of its corporate officers or principal owners.

Except as noted hereafter, it is further certified that said legal entity and its corporate officers, principal owners, managers, auditors and others in a position of administering federal funds are not currently under suspension, debarment, voluntary exclusion or determination of ineligibility; nor have a debarment pending; nor been suspended, debarred, voluntarily excluded or determined ineligible within the past three years by the Mississippi Transportation Commission, the State of Mississippi, any other State or a federal agency; nor been indicted, convicted or had a civil judgment rendered by a court of competent jurisdiction in any matter involving fraud or official misconduct within the past three years.

Do exceptions exist and are made a part thereof? Yes / No

Any exceptions shall address to whom it applies, initiating agency and dates of such action.

Note: Exceptions will not necessarily result in denial of award but will be considered in determining bidder responsibility. Providing false information may result in criminal prosecution or administrative sanctions.

All of the foregoing is true and correct.

(1/2016 S)

For Informational Purposes Only

SECTION 902

CONTRACT FOR **SP-0303-00(012)/107179301**

LOCATED IN THE COUNTY(IES) OF **Claiborne**

STATE OF MISSISSIPPI,
COUNTY OF HINDS

This contract entered into by and between the Mississippi Transportation Commission on one hand, and the undersigned contractor, on the other witnesseth;

That, in consideration of the payment by the Mississippi Transportation Commission of the prices set out in the proposal hereto attached, to the undersigned contractor, such payment to be made in the manner and at the time of times specified in the specifications and the special provisions, if any, the undersigned contractor hereby agrees to accept the prices stated in the proposal in full compensation for the furnishing of all materials and equipment and the executing of all the work contemplated in this contract.

It is understood and agreed that the advertising according to law, the Advertisement, the instructions to bidders, the proposal for the contract, the specifications, the revisions of the specifications, the special provisions, and also the plans for the work herein contemplated, said plans showing more particularly the details of the work to be done, shall be held to be, and are hereby made a part of this contract by specific reference thereto and with like effect as if each and all of said instruments had been set out fully herein in words and figures.

It is further agreed that for the same consideration the undersigned contractor shall be responsible for all loss or damage arising out of the nature of the work aforesaid; or from the action of the elements and unforeseen obstructions or difficulties which may be encountered in the prosecution of the same and for all risks of every description connected with the work, exceptions being those specifically set out in the contract; and for faithfully completing the whole work in good and workmanlike manner according to the approved Plans, Specifications, Special Provisions, Notice(s) to Bidders and requirements of the Mississippi Department of Transportation.

It is further agreed that the work shall be done under the direct supervision and to the complete satisfaction of the Executive Director of the Mississippi Department of Transportation, or his authorized representatives, and when Federal Funds are involved subject to inspection at all times and approval by the Federal Highway Administration, or its agents as the case may be, or the agents of any other Agency whose funds are involved in accordance with those Acts of the Legislature of the State of Mississippi approved by the Governor and such rules and regulations issued pursuant thereto by the Mississippi Transportation Commission and the authorized Federal Agencies.

The Contractor agrees that all labor as outlined in the Special Provisions may be secured from list furnished by

It is agreed and understood that each and every provision of law and clause required by law to be inserted in this contract shall be deemed to be inserted herein and this contract shall be read and enforced as though it were included herein, and, if through mere mistake or otherwise any such provision is not inserted, then upon the application of either party hereto, the contract shall forthwith be physically amended to make such insertion.

The Contractor agrees that he has read each and every clause of this Contract, and fully understands the meaning of same and that he will comply with all the terms, covenants and agreements therein set forth.

Witness our signatures this the____ day of _____,_____.

_____
Contractor(s)

By_____

Title_____

Signed and sealed in the presence of:
(names and addresses of witnesses)

_____

MISSISSIPPI TRANSPORTATION COMMISSION

By_____
Executive Director

_____
Secretary to the Commission

Award authorized by the Mississippi Transportation Commission in session on the ____ day of _____,_____, Minute Book No. _____, Page No. _____.

Revised 8/06/2003

For Informational Purposes Only

S E C T I O N 9 0 3
PERFORMANCE AND PAYMENT BOND

CONTRACT BOND FOR: **SP-0303-00(012)/107179301**

LOCATED IN THE COUNTY(IES) OF: **Claiborne**

STATE OF MISSISSIPPI,
COUNTY OF HINDS

Know all men by these presents: that we, _____
(Contractor)
_____ Principal, a _____

residing at_____ in the State of _____

and _____
(Surety)
residing at _____ in the State of _____,

authorized to do business in the State of Mississippi, under the laws thereof, as surety, effective as of the contract date shown below, are held and firmly bound unto the State of Mississippi in the sum of _____

_____

($_____) Dollars, lawful money of the United States of America, to be paid to it for which payment well and truly to be made, we bind ourselves, our heirs, administrators, successors, or assigns jointly and severally by these presents.

The conditions of this bond are such, that whereas the said _____

_____

principal, has (have) entered into a contract with the Mississippi Transportation Commission, bearing the date of _____ day of _____ A.D. _____ hereto annexed, for the construction of certain projects(s) in the State of Mississippi as mentioned in said contract in accordance with the Contract Documents therefor, on file in the offices of the Mississippi Department of Transportation, Jackson, Mississippi.

Now therefore, if the above bounden _____ _____in all things shall stand to and abide by and well and truly observe, do keep and perform all and singular the terms, covenants, conditions, guarantees and agreements in said contract, contained on his (their) part to be observed, done, kept and performed and each of them, at the time and in the manner and form and furnish all of the material and equipment specified in said contract in strict accordance with the terms of said contract which said plans, specifications and special provisions are included in and form a part of said contract and shall maintain the said work contemplated until its final completion and acceptance as specified in Subsection 109.11 of the approved specifications, and save harmless said Mississippi Transportation Commission from any loss or damage arising out of or occasioned by the negligence, wrongful or criminal act, overcharge, fraud, or any other loss or damage whatsoever, on the part of said principal (s), his (their) agents, servants, or employees in the performance of said work or in any manner connected therewith, and shall be liable and responsible in a civil action instituted by the State at the instance of the Mississippi Transportation Commission or any officer of the State authorized in such cases, for double any amount in money or property, the State may lose or be overcharged or otherwise defrauded of, by reason of wrongful or criminal act, if any, of the Contractor(s), his (their) agents or employees, and shall promptly pay the said agents, servants and employees and all persons furnishing labor, material, equipment or supplies therefor, including premiums incurred, for Surety Bonds, Liability Insurance, and Workmen's Compensation Insurance; with the additional obligation that such Contractor shall promptly make payment of all taxes, licenses, assessments, contributions, damages,

For Informational Purposes Only

any liquidated damages which may arise prior to any termination of said principal's contract, any liquidated damages which may arise after termination of the said principal's contract due to default on the part of said principal, penalties and interest thereon, when and as the same may be due this state, or any county, municipality, board, department, commission or political subdivision: in the course of the performance of said work and in accordance with Sections 31-5-51 et seq. Mississippi Code of 1972, and other State statutes applicable thereto, and shall carry out to the letter and to the satisfaction of the Executive Director of the Mississippi Department of Transportation, all, each and every one of the stipulations, obligations, conditions, covenants and agreements and terms of said contract in accordance with the terms thereof and all of the expense and cost and attorney's fee that may be incurred in the enforcement of the performance of said contract, or in the enforcement of the conditions and obligations of this bond, then this obligation shall be null and void, otherwise to be and remain in full force and virtue.

_____	_____
(Contractors) Principal	Surety
By _____	By _____
	(Signature) Attorney in Fact
	Address _____
	_____
Title _____	_____
(Contractor's Seal)	(Printed) MS Agent
	_____
	(Signature) MS Agent
	Address _____
	_____
	_____
	(Surety Seal)
	_____
	Mississippi Insurance ID Number

For Informational Purposes Only

Revised 9/02/2014

BID BOND

KNOW ALL MEN BY THESE PRESENTS, that we_____
Contractor

_____
Address

_____
City, State ZIP

As principal, hereinafter called the Principal, and _____
Surety

a corporation duly organized under the laws of the state of _____

as Surety, hereinafter called the Surety, are held and firmly bound unto **State of Mississippi, Jackson, Mississippi**

As Obligee, hereinafter called Obligee, in the sum of **Five Per Cent (5%) of Amount Bid**

Dollars($_____)

for the payment of which sum will and truly to be made, the said Principal and said Surety, bind ourselves, our heirs, executors, administrators, successors and assigns, jointly and severally, firmly by these presents.

WHEREAS, the Principal has submitted a bid for **Upgrade and Repair of SR 552, known as State Project No. SP-0303-00(012) / 107179301 in Claiborne County.**

NOW THEREFORE, the condition of this obligation is such that if the aforesaid Principal shall be awarded the contract, the said Principal will, within the time required, enter into a formal contract and give a good and sufficient bond to secure the performance of the terms and conditions of the contract, then this obligation to be void; otherwise the Principal and Surety will pay unto the Obligee the difference in money between the amount of the bid of the said Principal and the amount for which the Obligee legally contracts with another party to perform the work if the latter amount be in excess of the former, but in no event shall liability hereunder exceed the penal sum hereof.

Signed and sealed this _____day of _____, 20___

_____
(Principal) (Seal)

_____ By:_____
(Witness) (Name) (Title)

_____
(Surety) (Seal)

_____ By:_____
(Witness) (Attorney-in-Fact)

_____
(MS Agent)

_____
Mississippi Insurance ID Number