MDOT Use Only
Checked _____
Loaded _____
Keyed _____

08 -

SM No. CBR0055041031

PROPOSAL AND CONTRACT DOCUMENTS

FOR THE CONSTRUCTION OF

08
Bridge Repair on I-55 over Hickahala Creek Bridge Nos. 266.8A & 266.8B, known as Federal Aid Project No. BR-0055-04(103) / 107214302 in Tate County.

Project Completion: 11/30/2016

(STATE DELEGATED)

NOTICE

BIDDERS MUST PURCHASE A BID PROPOSAL FROM MDOT CONTRACT ADMINISTRATION DIVISION TO BID THIS PROJECT.

Electronic addendum updates will be posted on www.gomdot.com

SECTION 900

OF THE CURRENT
2004 STANDARD SPECIFICATIONS
FOR ROAD AND BRIDGE CONSTRUCTION

JACKSON, MISSISSIPPI

MISSISSIPPI DEPARTMENT OF TRANSPORTATION
TABLE OF CONTENTS

PROJECT: BR-0055-04(103)/107214302 - Tate

Section 901 - Advertisement

Section 904 - Notice to Bidders

#1	Governing Specifications
#3	Final Cleanup
#640	Fiber Reinforced Concrete
#1405	Errata & Modifications to 2004 Standard Specifications
#1928	Federal Bridge Formula
#2382	Status of ROW, w/ Attachments
#3067	Storm Water Discharge Associated with Construction Activities (≥1 and <5 Acres)
#3131	Temporary Traffic Paint
#3612	Additional Erosion Control Requirements
#3893	Petroleum Products Base Price
#4214	Safety Apparel
#4473	Alternate Crushed Stone Base Bid Items
#4526	Electronic Addendum Process
#4565	Manual on Uniform Traffic Control Devices (MUTCD)
#5044	Questions Regarding Bidding
#5053	Contractor Correspondence
#5252	Terminal End Sections
#5405	Traffic Control Devices
#5412	Weight Limits
#5556	DUNS Requirement for Federal Funded Projects
#5824	Adjustments for Bituminous Materials
#5865	Non-Quality Control / Quality Assurance Concrete
#5866	Payroll Requirements
#5896	DBE Forms, Participation and Payment
#5983	Bridge Repair Permits
#6411	Disadvantaged Business Enterprise, w/ Supplement
#6447	Contract Time
#6448	Specialty Items
#6449	Addtional Construction Requirements
#6535	Contract Modifications

906 Required Federal Contract Provisions -- FHWA 1273, w/Supplements

Section 907 - Special Provisions

907-101-4	Definitions
907-102-12	Bidding Requirements and Conditions
907-103-11	Award and Execution
907-104-5	Scope of Work
907-104-6	Partnering Process
907-105-9	Control of Work

907-107-13	Legal Relations and Responsibility to Public, w/Supplement
907-107-14	Contractor's Protection Plan, w/ Supplement
907-108-38	Prosecution and Progress
907-109-8	Measurement and Payment
907-110-2	Wage Rates
907-225-5	Grassing
907-226-3	Temporary Grassing
907-227-10	Hydroseeding
907-234-5	Siltation Barriers
907-237-4	Wattles
907-249-1	Riprap for Erosion Control
907-304-13	Granular Courses
907-401-7	Asphalt Pavements, w/ Supplement
907-403-14	Asphalt Pavements
907-407-2	Tack Coat
907-601-1	Structural Concrete
907-603-8	Culverts & Storm Drains
907-618-9	Placement of Temporary Traffic Stripe
907-618-13	Temporary Construction Signs
907-619-2	Glare Paddles
907-619-5	Changeable Message Signs
907-626-25	Thermoplastic Traffic Markings
907-630-7	Remove and Reset Signs
907-701-5	Hydraulic Cement, w/ Supplement
907-702-5	Specifications for Bituminous Materials
907-703-12	Aggregates, w/ Supplement
907-708-6	Non-Metal Drainage Structures
907-709-1	Metal Pipe
907-710-1	Fast Dry Solvent Traffic Paint
907-711-4	Synthetic Structural Fiber Reinforcement
907-713-6	Admixtures for Concrete
907-714-8	Miscellaneous Materials
907-715-4	Roadside Development Materials
907-720-2	Pavement Marking Materials
907-804-19	Concrete Bridges and Structures, w/ Supplement
907-815-2	Sediment Control Stone

Section 905 - Proposal, Proposal Bid Items, Combination Bid Proposal
Certification of Performance - Prior Federal-Aid Contracts
Certification Regarding Non-Collusion, Debarment and Suspension
SAM.GOV Registration and DUNS Number
Section 902 - Contract Form
Section 903 - Contract Bond Forms
Form -- OCR-485

Pile Data Form

PROJECT: BR-0055-04(103)/107214302 - Tate

(REVISIONS TO THE ABOVE WILL BE INDICATED ON THE SECOND SHEET OF SECTION 905 AS ADDENDA)

06/29/2016 09:44 AM

MISSISSIPPI DEPARTMENT OF TRANSPORTATION

SECTION 901 - ADVERTISEMENT

Electronic bids will be received by the Mississippi Transportation Commission at 10:00 o'clock A.M., Tuesday, July 26, 2016, from the Bid Express Service and shortly thereafter publicly read on the Sixth Floor for:

Bridge Repair on I-55 over Hickahala Creek Bridge Nos. 266.8A & 266.8B, known as Federal Aid Project No. BR-0055-04(103) / 107214302 in Tate County.

The attention of bidders is directed to the Contract Provisions governing selection and employment of labor. Minimum wage rates have been predetermined by the Secretary of Labor and are subject to Public Law 87-581, Work Hours Act of 1962, as set forth in the Contract Provisions.

The Mississippi Department of Transportation hereby notifies all bidders that it will affirmatively insure that in any contract entered into pursuant to this advertisement, disadvantaged business enterprises will be afforded full opportunity to submit bids in response to this invitation and will not be discriminated against on the grounds of race, color, sex, age, disability, religion or national origin in consideration for an award.

The award of this contract will be contingent upon the Contractor satisfying the DBE requirements.

Bid proposals must be purchased online at <https://shopmdot.ms.gov>. Specimen proposals may be viewed and downloaded online at no cost at <http://mdot.ms.gov> or purchased online. Proposals are available at a cost of Ten Dollars ($10.00) per proposal plus a small convenience fee. Cash or checks will not be accepted as payment.

Plans must be purchased online at <https://shopmdot.ms.gov>. Costs of plans will be on a per sheet basis plus a small convenience fee. If you have any questions, you can contact the MDOT Plans Print Shop at (601) 359-7460, or e-mail at plans@mdot.state.ms.us. Plans will be shipped upon receipt of payment. Cash or checks will not be accepted as payment.

Bid bond, signed or countersigned by a Mississippi Agent or Qualified Nonresident Agent, with Power of Attorney attached, a Cashier's check or Certified Check for five (5%) percent of bid, payable to STATE OF MISSISSIPPI, must accompany each proposal.

The attention of bidders is directed to the provisions of Subsection 102.07 pertaining to irregular proposals and rejection of bids.

MELINDA L. MCGRATH
EXECUTIVE DIRECTOR

MISSISSIPPI DEPARTMENT OF TRANSPORTATION

SECTION 904 - NOTICE TO BIDDERS NO. 1 **CODE: (IS)**

DATE: **05/03/2004**

SUBJECT: **Governing Specifications**

The current (2004) Edition of the Standard Specifications for Road and Bridge Construction adopted by the Mississippi Transportation Commission is made a part hereof fully and completely as if it were attached hereto, except where superseded by special provisions, or amended by revisions of the Specifications contained herein. Copies of the specification book may be purchased from the MDOT Construction Division.

A reference in any contract document to controlling requirements in another portion of the contract documents shall be understood to apply equally to any revision or amendment thereof included in the contract.

In the event the plans or proposal contain references to the 1990 Edition of the Standard Specifications for Road and Bridge Construction, it is to be understood that such references shall mean the comparable provisions of the 2004 Edition of the Standard Specifications.

MISSISSIPPI DEPARTMENT OF TRANSPORTATION

SECTION 904 - NOTICE TO BIDDERS NO. 3 **CODE: (SP)**

DATE: **05/03/2004**

SUBJECT: **Final Clean-Up**

Immediately prior to final inspection for release of maintenance, the Contractor shall pick up, load, transport and properly dispose of all litter from the entire highway right-of-way that is within the termini of the project.

Litter shall include, but not be limited to, solid wastes such a glass, paper products, tires, wood products, metal, synthetic materials and other miscellaneous debris.

Litter removal is considered incidental to other items of work and will not be measured for separate payment.

MISSISSIPPI DEPARTMENT OF TRANSPORTATION

SECTION 904 - NOTICE TO BIDDERS NO. 640 **CODE: (IS)**

DATE: 09/26/2005

SUBJECT: Fiber Reinforced Concrete

Bidders are hereby advised that synthetic structural fibers meeting the requirements of Subsection 907-711.04 may be used in lieu of wire mesh in some items of construction. Substitution of fibers for wire mesh will be allowed in the construction of paved ditches, paved flumes, paved inlet apron, driveways, guard rail anchors and pile encasements. Substitution in any other items of work must be approved by the State Construction Engineer prior to use.

MISSISSIPPI DEPARTMENT OF TRANSPORTATION

SECTION 904 - NOTICE TO BIDDERS NO. 1405 **CODE: (IS)**

DATE: 03/15/2007

SUBJECT: ERRATA AND MODIFICATIONS TO THE 2004 STANDARD SPECIFICATIONS

Page	Subsection	Change
101	201.01	In the second sentence of the first paragraph, change “salvable” to “salvageable”.
107	202.04	In the fourth sentence of the fourth paragraph, change “yard” to “feet”.
107	202.05	In the list of units measurements for 202-B, add “square foot”.
132	211.03.4	In the second sentence of the second paragraph, change “planted” to “plated”.
192	306.02.4	In the first line of the first paragraph, delete the word “be”.
200	307.03.7	In the fourth sentence of the second paragraph, change “lime-fly ash” to “treated”.
236	401.01	Change the header from “Section 403” to “Section 401”.
242	401.02.3.2	In the first sentence of the third full paragraph, add “1/8” in the blank before the inch mark.
250	401.02.6.3	In the second sentence of the first paragraph on page 250, change “rutting over ” ” to “rutting over 1/8" ”.
253	401.02.6.4.2	In the paragraph preceding the table, change “91.0” to “89.0”.
259	401.03.1.4	In the first paragraph, change “92.0 percent” to “the specified percentage (92.0 or 93.0)”.
269	403.03.2	In the table at the top of page 269, change the PI requirement from “ = ” to “ $\leq$ ”.

278	404.04	In the second sentence, change the subsection from "401.04" to "403.04".
283	409.02.2	Change "PG 64-22" to "PG 67-22".
294	413.02	In the first sentence of the second paragraph, change "707.02.1.3" to "Subsection 707.02.1.3".
340	511.04	In the second sentence of the second paragraph, change "412" to "512".
349	601.03.3	In the first sentence, change "804.03.2" to "804.03.5".
355	603.02	Change the subsection reference for Joint mortar from "707.03" to "714.11".
369	604.04	In the first sentence, change "601.04" to "Subsection 601.04".
427	619.04	Delete the second paragraph.
442	625.04	In the third paragraph, change "626.04" to "Subsection 626.04".
444	626.03.1.2	Delete the third sentence of the first paragraph.
464	631.02	Change the subsection reference for Water from "714.01.0" to "714.01.1".
570	682.03	Change the subsection number from "682-03" to "682.03".
575	683.10.4	Change the subsection number from "683.10.4" to "683.04".
575	683.10.5	Change the subsection number from "683.10.5" to "683.05".
596	701.02	In the table under the column titled "Cementations material required", change "Class F, FA" to "Class F FA,".
603	702.11	In the first sentence, change "702.12" to "Subsection 702.12".
612	703.04.2	In the fifth paragraph, delete "Subsection 703.11 and".
616	703.07.2	In the Percentage By Weight Passing Square Mesh Sieves table, change the No. 10 requirement for Class 7 material from "30 - 10" to "30 - 100".

618	703.13.1	In the first sentence of the first paragraph, change "703.09" to "703.06".
618	703.13.2	In the first sentence, change "703.09" to "703.06".
671	712.06.2.2	In the first sentence, change "712.05.1" to "Subsection 712.05.1".
689	714.11.2	In the first sentence, change "412" to "512".
709	715.09.5	In the first sentence of the first paragraph, change "guage" to "gauge".
717	717.02.3.4	In the top line of the tension table, change "1 1/2" to "1 1/8" and change "1 1/8" to "1 1/2".
741	720.05.2.2	In the last sentence of this subsection, change "720.05.2.1" to "Subsection 720.05.2.1".
827	803.03.2.3.7.5.2	In the first sentence of the second paragraph, change "803.03.5.4" to "803.03.2.3.4".
833	803.03.2.6	In the first sentence, change "803.03.7" to "803.03.2.5".
854	804.02.11	In the last sentence of the first paragraph, change "automatically" to "automatic".
859	804.02.13.1.3	In the last sentence, change Subsection "804.02.12.1" to "804.02.12".
879	804.03.19.3.2	In the first sentence of the third paragraph, change "listed on of Approved" to "listed on the Approved".
879	804.03.19.3.2	In the last sentence of the last paragraph, change "804.03.19.3.1" to "Subsection 804.03.19.3.1".
962	814.02.3	In the first sentence, change "710.03" to "Subsection 710.03".
976	820.03.2.1	In the first sentence, change "803.02.6" to "803.03.1.7".
976	820.03.2.2	In the first sentence, change "803.03.9.6" to "803.03.1.9.2".
985	Index	Change the subsection reference for Petroleum Asphalt Cement from "702.5" to "702.05".

985	Index	Change the subsection reference for the Definition of Asphaltic Cement or Petroleum Asphalt from "700.2" to "700.02".
985	Index	Change the subsection reference for Automatic Batchers from "501.03.2.4" to "804.02.10.4".
986	Index	Delete "501.03.2" as a subsection reference for Batching Plant & Equipment.
988	Index	Change the subsection reference for the Central Mixed Concrete from "501.03.3.2" to "804.02.11".
988	Index	Change the subsection reference for the Concrete Batching Plant & Equipment from "501.03.2" to "804.02.11".
999	Index	Delete "501.03.3.3" as a subsection reference for Truck Mixers.
1001	Index	Change the subsection reference for Edge Drain Pipes from "605.3.5" to "605.03.5".
1002	Index	Change the subsection reference for Metal Posts from "713.05.2" to "712.05.2".
1007	Index	Change the subsection reference for Coarse Aggregate of Cement Concrete Table from "703.3" to "703.03".
1007	Index	Change the subsection reference for Composite Gradation for Mechanically Stabilized Courses Table from "703.8" to "703.08".
1009	Index	Delete "501.03.3.3" as a subsection reference for Truck Mixers and Truck Agitators.
1010	Index	Delete reference to "Working Day, Definition of".

MISSISSIPPI DEPARTMENT OF TRANSPORTATION

SECTION 904 - NOTICE TO BIDDERS NO. 1928 **CODE: (IS)**

DATE: **04/14/2008**

SUBJECT: **Federal Bridge Formula**

Bidders are hereby advised that Federal Highway Administration Publication No. FHWA-MC-94-007, **BRIDGE FORMULA WEIGHTS**, dated January 1994, is made a part of this contract when applicable.

Prior to the preconstruction conference, the Contractor shall advise the Engineer, in writing, what materials, if any, will be delivered to the jobsite via Interstate route(s).

Copies of the **BRIDGE FORMULA WEIGHTS** publication may be obtained by contacting:

Federal Highway Administration
400 7th Street, SW
Washington, DC 20590
(202) 366-2212

or

http://ops.fhwa.dot.gov/freight/sw/brdgcalc/calc_page.htm

MISSISSIPPI DEPARTMENT OF TRANSPORTATION

SECTION 904 - NOTICE TO BIDDERS NO. 2382 **CODE: (IS)**

DATE: **02/12/2009**

SUBJECT: **Status of Right-of-Way**

Although it is desirable to have acquired all rights-of-way and completed all utility adjustments and work to be performed by others prior to receiving bids, sometimes it is not considered to be in the public interest to wait until each and every such clearance has been obtained. The bidder is hereby advised of possible unacquired rights-of-way, relocatees and utilities which have not been completed.

The status of right-of-way acquisition, utility adjustments, encroachments, potentially contaminated sites and asbestos containation are set forth in the following attachments.

In the event right of entry is not available to ALL parcels of right-of-way and/or all work that is to be accomplished by others on the date set forth in the contract for the Notice to Proceed is not complete, the Department will issue a restricted Notice to Proceed.

STATUS OF RIGHT-OF-WAY
BR-0055-04(103)
107214-302000
Tate County

All rights of way and legal rights of entry have been acquired **except:**

None.

MISSISSIPPI DEPARTMENT OF TRANSPORTATION

Inter-Departmental Memorandum

TO: UTILITY LIAISON SUPERVISOR
Mr. Dale Greer

DATE: May 13, 2016

FROM: Kelly W. Standard KWS
District 2 Utility Coordinator

SUBJECT OR PROJECT NO: BR-0055-04(103)
107214/302000

INFORMATION COPY TO: File
84-01 Russell
73-01 Frederick

COUNTY: Tate

UTILITY STATUS REPORT

Let Date: July 26, 2016
Notice to Proceed Date: September 8, 2016
Bridge Repair on I-55 over Hickahala Creek

This is to certify that there are no known utility conflicts associated with the above referenced project.

MISSISSIPPI DEPARTMENT OF TRANSPORTATION

INTER-DEPARTMENTAL MEMORANDUM

TO: Right of Way
Trudi Loflin

DATE: 5/16/2016

FROM: Asst. Dst. Eng.-Con.
Charles A. Sheffield CAS

PROJECT: BR-0055-04(103)
107214/302000

INFORMATION COPY TO:

COUNTY: Tate

Ann Russell (84-01)
File

The above referenced project has been inspected and this is to certify that there are no encroachments.

CAS/jaw

ASBESTOS CONTAMINATION STATUS OF BUILDINGS
TO BE REMOVED BY THE CONTRACTOR
BR-0005-04(103)
107214-302000
Tate County
May 11, 2016

Reference is made to notices to bidders entitled "Asbestos National Emission Standards for Hazardous Air Pollutants (NESHAP)" and "Removal of Obstructions".

The following pertinent information is furnished concerning asbestos containing materials (ACMs), if any, found in buildings to be removed by the Contractor.

There is no Right of Way required for this project. There are no buildings to be removed by the contractor.

STATUS OF POTENTIALLY CONTAMINATED SITES
BR-0005-04(103)
107214-302000
Tate County
May 11, 2016

THERE IS NO RIGHT OF WAY REQUIRED FOR THIS PROJECT. NO INITIAL SITE ASSESSMENT WILL BE PERFORMED. IF CONTAMINATION ON EXISTING RIGHT OF WAY IS DISCOVERED, IT WILL BE HANDLED BY THE DEPARTMENT.

ROW STATUS REPORT OF AFFECTED RAILROAD FACILITIES

PROJECT EXTERNAL NUMBER: BR-0055-04(103)
PROJECT FMS NUMBER: 107214/302000
TERMINI: I-55 BRIDGES OVER HICKAHALA CREEK AND RELIEF BRIDGES (266.8 A&B) INTERIM REPAIR
COUNTY: TATE

DATE: MAY 16, 2016

There are no railroad facilities affected by the above referenced project.

MISSISSIPPI DEPARTMENT OF TRANSPORTATION

SECTION 904 - NOTICE TO BIDDERS NO. 3067 **CODE: (SP)**

DATE: 04/14/2010

SUBJECT: Storm Water Discharge Associated with Construction Activity (≥ 1 and < 5 Acres)

Construction Storm Water General NPDES Permit MSR 15 to discharge storm water associated with construction activity is required. This project is granted permission to discharge treated storm water into State waters. Copies of said permit and Storm Water Pollution Prevention Plan (SWPPP) are on file with the Department.

Prior to the execution of the contract, the successful bidder shall execute and deliver to the Executive Director an original signed copy of the completed Prime Contractor Certification (Form No. 1).

Failure of the bidder to execute and file the completed Prime Contractor Certification (Form No. 1) shall be just cause for the cancellation of the award.

The executed Prime Contractor Certification (Form No. 1).shall be prima facie evidence that the bidder has examined the permit, is satisfied as to the terms and conditions contained therein, and that the bidder has the primary responsibility for meeting all permit terms and conditions including, but not limited to, the inspection and reporting requirements of Part IV. For this project, the Contractor shall furnish, set up and read, as needed, an on-site rain gauge.

The Contractor must furnish the Project Engineer a completed copy of the Small Construction Notice of Intent (SCNOI) along with the Contractor's Erosion Control Plan.

The Contractor shall make inspections in accordance with condition No. S-4, Page 13, and shall furnish the Project Engineer with the results of each weekly inspection as soon as possible following the date of inspection. The weekly inspections must be documented monthly on the Inspection and Certification Form, a copy of which is provided. The Contractor's representative and the Project Engineer shall jointly review and discuss the results of the inspections so that corrective action can be taken. The Project Engineer shall retain copies of the inspection reports.

The Engineer will have the authority to suspend all work and/or withhold payments for failure of the Contractor to carry out provisions of MDEQ's Storm Water Construction General Permit, the erosion control plan, updates to the erosion control plan, and /or proper maintenance of the BMPs.

Securing a permit (s) for storm water discharge associated with the Contractor's activity on any other regulated area the Contractor occupies, shall be the responsibility of the Contractor.

MISSISSIPPI DEPARTMENT OF TRANSPORTATION

SECTION 904 - NOTICE TO BIDDERS NO. 3131 **CODE: (SP)**

DATE: **06/24/2010**

SUBJECT: **Temporary Traffic Paint**

Bidders are hereby advised that the temporary traffic paint for this project can be waterborne paint as specified in the 2004 Mississippi Standard Specifications For Road and Bridge Construction or fast dry solvent traffic paint meeting the requirements set out in 907-710-1 (Fast Dry Solvent Traffic Paint).

Payment for all temporary traffic paint shall be paid under the appropriate 619 pay items.

When using fast dry solvent traffic stripe, no paint can be sprayed or placed on the ground during set-up or clean-up.

MISSISSIPPI DEPARTMENT OF TRANSPORTATION

SECTION 904 - NOTICE TO BIDDERS NO. 3612 **CODE: (SP)**

DATE: 08/10/2011

SUBJECT: Additional Erosion Control Requirements

Bidders are hereby advised of the following requirements that relate to erosion control activities on the project.

THE MAXIMUM TOTAL ACREAGE THAT CAN BE DISTURBED, AT ONE TIME, ON THE PROJECT IS NINETEEN (19) ACRES. THE CONTRACTOR SHALL BE REQUIRED TO STABILIZE DISTURBED AREAS PRIOR TO OPENING UP ADDITIONAL SECTIONS OF THE PROJECT. STABILIZED SHALL BE WHEN THE DISTURBED AREA MEETS ONE OF THE FOLLOWING CRITERIA:

- **THE AREA HAS BEEN GRASSED, EITHER TEMPORARY OR PERMANENT, AND MULCHED ACCORDING TO THE SPECIFICATIONS,OR**
- **A CRUSHED STONE COURSE OR A LIFT OF ASPHALT PAVEMENT HAS BEEN PLACED, OR**
- **THE AREA HAS BEEN CHEMICALLY TREATED USING PORTLAND CEMENT OR LIME-FLY ASH, AND SEALED.**

DISTURBED AREAS INCLUDE THE ROADBED, SLOPES AND REMAINING AREA OUT TO THE ROW LINE.

Clearing and Grubbing: Prior to beginning any clearing and grubbing operations on the project, controls shall be in place to address areas such as drainage structures, wetlands, streams, steep slopes and any other sensitive areas as directed by the Engineer. Clearing and grubbing should be limited to the minimum area necessary to construct the project. Grubbing operations should be minimized in areas outside the construction limits and stumps should be cut off flush with the existing ground elevations. A buffer area of at least fifteen (15) feet shall be in place adjacent to the right-of-way line and at least five (5) feet adjacent to stream banks. The buffer area can either be the existing vegetation that is left undisturbed or re-established by planting new vegetation if clearing and grubbing was required.

Unclassified Excavation: Cut sections shall be graded in accordance with the typical sections and plan grades. Permanent erosion control BMP's should be placed as soon as possible after the cut material has been moved. Fill sections that are completed shall have permanent erosion control BMP's placed. Fill sections that are not completed will be either permanently or temporarily grassed until additional material is made available to complete these sections. All unclassified excavation on the project will still be required to be moved prior to incorporating any borrow excavation on the project. The contractor may have to stockpile unclassified excavation in order to comply with the nineteen (19) acre requirement. No additional compensation will be made for stockpiling operations.

Disturbed areas that remain inactive for a period of more than fourteen (14) days shall be temporary grassed and mulched. Temporary grassing and mulching shall only be paid one time for a given area.

MISSISSIPPI DEPARTMENT OF TRANSPORTATION

SECTION 904 - NOTICE TO BIDDERS NO. 3893 **CODE: (SP)**

DATE: **04/10/2012**

SUBJECT: **Petroleum Products Base Prices**

Bidders are advised that monthly petroleum products base prices will be available at the web site listed below. Current monthly prices will be posted to this web site on or before the 15th of each month. Bidders are advised to use the petroleum base prices on this web site when preparing their bids. The current monthly petroleum products base prices will be acknowledged by the Bidder and become part of the contract during the execution process.

Monthly Petroleum Products Base Prices can be viewed at:

http://sp.gomdot.com/Contract%20Administration/BidSystems/Pages/letting%20calendar.aspx

MISSISSIPPI DEPARTMENT OF TRANSPORTATION

SECTION 904 - NOTICE TO BIDDERS NO. 4214 **CODE: (IS)**

DATE: 11/29/2012

SUBJECT: Safety Apparel

Bidders are advised that the Code of Federal Regulations CFR 23 Part 634 final rule was adopted November 24, 2006 with an effective date of November 24, 2008. This rule requires that "All workers within the right-of-way of a Federal-Aid Highway who are exposed either to traffic (vehicles using the highway for the purposes of travel) or to construction equipment within the work area shall wear high-visibility safety apparel". High-visibility safety apparel is defined in the CFR as "personnel protective safety clothing that is intended to provide conspicuity during both daytime and nighttime usage, and that meets the Performance Class 2 or 3 requirements of the ANSI/ISEA 107-2004 publication entitled American National Standard for High-Visibility Safety Apparel and Headwear". All workers on Mississippi State Highway right-of-way shall comply with this Federal Regulation. Workers are defined by the CFR as "people on foot whose duties place them within the right-of way of a Federal-Aid Highway, such as highway construction and maintenance forces, survey crews, utility crews, responders to incidents within the highway right-of-way, and law enforcement personnel when directing traffic, investigating crashes, and handling lane closures, obstructed roadways, and disasters within the right-of-way of a Federal-Aid Highway".

More information regarding high visibility safety apparel can be found at the following sites.

http://www.gpo.gov/fdsys/pkg/CFR-2008-title23-vol1/pdf/CFR-2008-title23-vol1-sec634-1.pdf

http://ops.fhwa.dot.gov/wz/resources/policy.htm#hv

MISSISSIPPI DEPARTMENT OF TRANSPORTATION

SECTION 904- NOTICE TO BIDDERS NO. 4473 **CODE: (SP)**

DATE: 04/08/2013

SUBJECT: Alternate Crushed Stone Base Bid Items

Bidders are advised that the Crushed Stone Base used on this project will be bid as an alternate pay item: ¾-inch and Down Crushed Stone Base, Size 825B Crushed Stone Base, or Size 610 Crushed Stone Base. Bidders must select one of the alternates at the time of bid. **The Contractor must use the selected crushed stone base throughout the entire project.**

MISSISSIPPI DEPARTMENT OF TRANSPORTATION

SECTION 904 - NOTICE TO BIDDERS NO. 4526 **CODE: (SP)**

DATE: 06/11/2013

SUBJECT: Electronic Addendum Process

Bidders are advised that hard copies of any addenda for this project will no longer be mailed to prospective bidders. All addenda for this project will be posted to the mdot.ms.gov webpage under the Proposal Addenda column for the current letting and appropriate call number. Bidders will have to download addenda from the webpage and process the addenda in the same manner as previous lettings. Addenda will be posted by 10:00 a.m. on Friday prior to the letting. It will be the Bidder's responsibility to check and see if any addenda have been posted for this project. Any questions regarding the downloading process of the addenda shall be directed to the Contract Administration Division at 601-359-7700. Any questions regarding the content of the addenda shall be submitted as a question in accordance with the Notice To Bidders entitled "Questions Regarding Bidding".

MISSISSIPPI DEPARTMENT OF TRANSPORTATION

SECTION 904 - NOTICE TO BIDDERS NO. 4565 **CODE: (SP)**

DATE: **06/27/2013**

SUBJECT: **Manual on Uniform Traffic Control Devices**

Any reference in the Standard Specifications or contract documents to a particular Section of the Manual on Uniform Traffic Control Devices (MUTCD) it shall mean that Section of the latest version of the Manual on Uniform Traffic Control Devices.

MISSISSIPPI DEPARTMENT OF TRANSPORTATION

SECTION 904 - NOTICE TO BIDDERS NO. 5044 **CODE: (SP)**

DATE: 05/13/2014

SUBJECT: Questions Regarding Bidding

Bidders are advised that all questions that arise regarding the contract documents (proposal) or plans on this project shall be directed to the www.gomdot.com current letting webpage. Click on the call number for this project to open an email form to submit your question. Questions must be submitted by 8:00 a.m. on the day prior to the letting. Answers to questions will be posted by 6:00 p.m. on the day prior to the letting. Answers can be viewed by clicking on Q&A link under the Proposal Addenda column.

It shall be the Bidders responsibility to familiarize themselves with the questions and answers that have been submitted on this project. Bidders are advised that by signing the contract documents for this project, they agree that the on-line Questions and Answers submitted on this project shall be added to and made part of the official contract.

MISSISSIPPI DEPARTMENT OF TRANSPORTATION

SECTION 904 - NOTICE TO BIDDERS NO. 5053 **CODE: (SP)**

DATE: 06/03/2014

SUBJECT: Contractor Correspondence

Bidders are advised that all correspondence concerning this project, other than correspondence related to the execution of the contract and sub-contracting, shall be sent to the Project Engineer. The Project Engineer will then forward any necessary correspondence to the appropriate Division. This includes general correspondence, submittals, shop drawings, requests for advancement of materials, etc.

MISSISSIPPI DEPARTMENT OF TRANSPORTATION

SECTION 904 - NOTICE TO BIDDERS NO. 5252 **CODE: (SP)**

DATE: **10/24/2014**

SUBJECT: Terminal End Sections

Guard rail terminal end sections shall be construction in accordance with the plans, specifications, and the following:

Flared.
Flared terminal end sections shall be FLEAT-350, REGENT, SRT-350, ROSS-350 or approved flared equal and installed in accordance with the manufacturer's recommendation. Prior to installation, the Contractor shall provide two copies of the manufacturer's installation details to the Project Engineer. The Project Engineer will keep one copy in the project file and provide one copy to the District Maintenance Engineer. The installation details shall be engineering drawings, a minimum of 11" X 17" in size. Reflective adhesive sheeting with alternating black and yellow stripes (sloping downward at an angle of 45 degrees in the direction traffic is to pass) shall be required on the end of the terminal section. The type of terminal section installed shall be written on the device with a Permanent Marking Stick or some other means of permanent identification.

Non-Flared.
Non-Flared terminal end sections shall be ET-2000, SKT-350, or approved non-flared equal (except ET-Plus) and shall be installed in accordance with the manufacturer's recommendation. Prior to installation, the Contractor shall provide two copies of the manufacturer's installation details to the Project Engineer. The Project Engineer will keep one copy in the project file and provide one copy to the District Maintenance Engineer. The installation details shall be engineering drawings, a minimum of 11" X 17" in size. Reflective adhesive sheeting with alternating black and yellow stripes (sloping downward at an angle of 45 degrees in the direction traffic is to pass) shall be required on the end of the terminal section. The type of terminal section installed shall be written on the device with a Permanent Marking Stick or some other means of permanent identification.

Likewise, impact attenuators shall be construction in accordance with the plans, specifications, and the following.

Approved impact attenuator systems shall meet standardized testing defined in Manual for Assessing Safety Hardware (MASH) or NCHRP Report 350. In addition, these devices shall have an acceptance letter from FHWA that documents the device meets the appropriate crash test criteria and can be used on the National Highway System (NHS). Prior to installation, the Contractor shall provide two copies of the manufacturer's installation details to the Project Engineer. The Project Engineer shall keep one copy in project file and provide one copy to District Maintenance Engineer. The installation details shall be engineering drawings, a minimum of 11"x17" in size. Reflective adhesive sheeting with alternating black and yellow stripes (sloping downward at an angle of 45 degrees in the direction traffic is to pass) shall be required on the end of the attenuator section. The type of system installed shall be written on the device with a Permanent Marking Stick or some other means of permanent identification.

MISSISSIPPI DEPARTMENT OF TRANSPORTATION

SECTION 904 - NOTICE TO BIDDERS NO. 5405 **CODE: (SP)**

DATE: 02/11/2015

SUBJECT: Traffic Control Devices

Bidders are advised of the following two changes regarding traffic control devices.

Flashing Arrow Panels

In Subsection 619.02.5 of the Standard Specifications, it states that flashing arrow panels shall meet the requirements of Section 6F.53 of the MUTCD. The new MUTCD has changed this reference to Section 6F.61. Flashing arrow panels on this project must meet the requirements of Section 6F.61 of the latest MUTCD.

Type III Barricade Rails

The use of 2-inch nominal thickness timber for rails on Type III barricades has not been approved by NCHRP as a crashworthy device. Therefore, the use of 2-inch nominal thickness timbers will not be allowed for rails on Type III Barricades. Timber rails for Type III Barricades shall be as follows.

- For barricades up to four feet (4') wide, the maximum thickness of timber rails shall be one inch (1") and the material shall be pine timber or ¾-inch ACX plywood.

- For barricades more than four feet (4') wide, timber rails shall be constructed of ¾-inch ACX plywood.

A list of crashworthy Type III Barricades can be found at the below FHWA website.

http://safety.fhwa.dot.gov/roadway_dept/policy_guide/road_hardware/wzd/

MISSISSIPPI DEPARTMENT OF TRANSPORTATION

SECTION 904 - NOTICE TO BIDDERS NO. 5412 **CODE: (SP)**

DATE: **02/18/2015**

SUBJECT: **Weight Limits**

Bidders are hereby advised that all trucks hauling materials to and from this project shall comply with the legal weight limits as established by law. MDOT will not compensate the Contractor for any portion of a load delivered to the project in excess of the legal limit for that truck.

Vehicles relying on harvest permits are limited to hauling only those materials set forth in Section 27-19-81(4) of the Mississippi Code, as amended.

MISSISSIPPI DEPARTMENT OF TRANSPORTATION

SECTION 904 - NOTICE TO BIDDERS NO. 5556 **CODE: (SP)**

DATE: 05/27/2015

SUBJECT: DUNS Requirement for Federal Funded Projects

Bidders are advised that the Prime Contractor must maintain current registrations in the System for Award Management (http://www.sam.gov) at all times during this project. A Dun and Bradstreet Data Universal Numbering System (DUNS) Number (http://www.dnb.com) is one of the requirements for registration in the System for Award Management.

Bidders are also advised that prior to the award of this contract, they MUST be registered in the System for Award Management.

MISSISSIPPI DEPARTMENT OF TRANSPORTATION

SECTION 904 - NOTICE TO BIDDERS NO. 5824 **CODE: (SP)**

DATE: 09/10/2015

SUBJECT: Adjustments for Bituminous Materials

Bidders are advised that Subsection 907-402.03.1.2, Tack Coat, in Special Provision 907-402, allows the Contractor several options for OGFC tack coat. Regardless of the tack coat used, the monthly material adjustment, as referenced in Section 109 of the Standard Specifications, will be made using the base and current prices of tack coat Grade PG 76-22.

Bidders are also advised that the specifications allow the use of RC-70, RC-250, RC-800, RS-1, RS-2, MC-30, MC-250, MS-2h, CMS-2h, LD-7, CQS-1h, ETAC-H, and NTSS-1HM in various other construction operations. If the Contractor uses one of these bituminous materials, the monthly material adjustment will be made using the base and current prices of the materials shown below.

Materials Used	Material Adjustment Made Based on Prices For
RC-70, 250, 800	MC-70
RS-1, 2	CRS-2
MC-30, 250	MC-70
MS-2h, CMS-2h	SS-1
LD-7, CQS-1h, ETAC-H, NTSS-1HM	CSS-1

MISSISSIPPI DEPARTMENT OF TRANSPORTATION

SECTION 904 - NOTICE TO BIDDERS NO. 5865 **CODE: (SP)**

DATE: **10/28/2015**

SUBJECT: **Non-Quality Control / Quality Assurance Concrete**

Bidders are advised that the following concrete items will not be accepted based on the Quality Control / Quality Assurance (QC/QA) requirements of Section 804 of the specifications. The acceptance of these pay items will be based on sampling and testing at the project site by MDOT forces. The Contractor is required to submit mix designs to accomplish this work in accordance with Section 804 and perform normal Quality Control functions at the concrete plant. Acceptance will be in accordance with the requirements of 907-601, Structural Concrete, and TMD-20-04-00-000. At the discretion of the Engineer, the Contractor may request that the concrete be accepted based on QC/QA requirements.

Section	Description
221	Paved Ditches
601	Minor Structures - manholes, inlets, catch basins, junction boxes, pipe headwalls, and pipe collars.
605	Edge Drain and Underdrain Outlet Pads
606	Guardrail Anchors
607	Fence Post Footings
608	Sidewalks
609	Curb and Gutter
614	Driveways
616	Median and Island Pavement
630	Sign Footings, except Overhead Sign Supports

MISSISSIPPI DEPARTMENT OF TRANSPORTATION

SECTION 904 - NOTICE TO BIDDERS NO. 5866 **CODE: (SP)**

DATE: 10/28/2015

SUBJECT: Payroll Requirements

Bidders are hereby advised that the Contractor and Subcontractor(s) are required to submit payroll information to the Project Engineers on a weekly basis.

On Federal-Aid Projects, CAD-880, CAD-881 and certified payroll submissions are required each week the Contractor or a Subcontractor performs work on the project. This is addressed in Section IV of Form FHWA-1273.

On State-Funded Projects, CAD-880 is required each week the Contractor or a Subcontractor performs work on the project.

When no work is performed on either Federal-Aid or State-Funded Projects, the Contractor should only submit CAD-880 showing no work activities.

The Contractor shall make all efforts necessary to submit this information to the Project Engineer weekly. The Engineer will have the authority to suspend the work wholly or in part and to withhold payments because of the Contractor's failure to submit the required information. Submission of forms and payrolls shall be current through the first full week of the month for the estimate period in order for the Project Engineer to process an estimate.

Bidders are advised to review the requirements regarding payroll submissions in Section 110 of the Standard Specifications.

MISSISSIPPI DEPARTMENT OF TRANSPORTATION

SECTION 904 - NOTICE TO BIDDERS NO. 5896 **CODE: (SP)**

DATE: **12/01/2015**

SUBJECT: **DBE Forms, Participation and Payment**

Bidders are hereby advised that the participation of a DBE Firm can not be counted towards the Prime Contractor's DBE goal until the amount being counted towards the goal has been paid to the DBE.

Form OCR-482 has been developed to comply with this requirement. Bidders are hereby advised that at the end of the job, the Prime Contractor will submit this form to the Project Engineer before the final estimate is paid and the project is closed out. This form certifies payments to all DBE Subcontractors over the life of the contract.

Form OCR-484 has also been developed to comply with this requirement. Bidders are hereby advised that each month, the Prime Contractors will submit this form to the Project Engineer no later than the last day of each month. This form certifies payments to all Subcontractors and shows all firms even if the Prime Contractor has paid no monies to the firm during that estimate period (negative report). The Project Engineer will attach this form to the monthly estimate before forwarding the estimate to the Contract Administration Division for processing.

Bidders are also advised that OCR-485 information will be completed by **ALL BIDDERS** submitting a bid proposal and **must be included in the bid proposal**. If the OCR-485 information is not included as part of bid proposal, your bid will be deemed irregular.

DBE Forms, including Forms OCR-482, OCR-484 and OCR-485, can be obtained from the Office of Civil Rights Division, MDOT Administration Building, 401 North West Street, Jackson, MS, or at www.gomdot.com under *Business, Disadvantaged Enterprise, Applications and Forms for the DBE Program, MDOT Forms*.

MISSISSIPPI DEPARTMENT OF TRANSPORTATION

SECTION 904 - NOTICE TO BIDDERS NO. 5983 **CODE: (SP)**

DATE: **01/07/2016**

SUBJECT: **Bridge Repair Permits**

PROJECT: **BR-0055-04(103) / 107214302 – Tate County**

The Department has acquired Nationwide Permit No. 3 (Special Conditions Attached) for repair and maintenance of bridge(s).

Copies of said permit(s) are on file with the Department.

SPECIAL CONDITIONS
NATIONWIDE PERMIT No. 3
Maintenance

A. The repair, rehabilitation, or replacement of any previously authorized, currently serviceable structure, or fill, or of any currently serviceable structure or fill authorized by 33 CFR 330.3, provided that the structure or fill is not to be put to uses differing from those uses specified or contemplated for it in the original permit or the most recently authorized modification. Minor deviations in the structure's configuration or filled area, including those due to changes in materials, construction techniques, requirements of other regulatory agencies, or current construction codes or safety standards that are necessary to make the repair, rehabilitation, or replacement are authorized. Any stream channel modification is limited to the minimum necessary for the repair, rehabilitation, or replacement of the structure or fill; such modifications, including the removal of material from the stream channel, must be immediately adjacent to the project or within the boundaries of the structure or fill. This NWP also authorizes the repair, rehabilitation, or replacement of those structures or fills destroyed or damaged by storms, floods, fire or other discrete events, provided the repair, rehabilitation, or replacement is commenced, or is under contract to commence, within two years of the date of their destruction or damage. In cases of catastrophic events, such as hurricanes or tornadoes, this two-year limit may be waived by the district engineer, provided the permittee can demonstrate funding, contract, or other similar delays.

B. This NWP also authorizes the removal of accumulated sediments and debris in the vicinity of existing structures (e.g., bridges, culverted road crossings, water intake structures, etc.) and/or the placement of new or additional riprap to protect the structure. The removal of sediment is limited to the minimum necessary to restore the waterway in the vicinity of the structure to the approximate dimensions that existed when the structure was built, but cannot extend farther than 200 feet in any direction from the structure. This 200 foot limit does not apply to maintenance dredging to remove accumulated sediments blocking or restricting outfall and intake structures or to maintenance dredging to remove accumulated sediments from canals associated with outfall and intake structures. All dredged or excavated materials must be deposited and

retained in an area that has no waters of the United States unless otherwise specifically approved by the district engineer under separate authorization. The placement of new or additional riprap must be the minimum necessary to protect the structure or to ensure the safety of the structure. Any bank stabilization measures not directly associated with the structure will require a separate authorization from the district engineer.

C. This NWP also authorizes temporary structures, fills, and work necessary to conduct the maintenance activity. Appropriate measures must be taken to maintain normal downstream flows and minimize flooding to the maximum extent practicable, when temporary structures, work, and discharges, including cofferdams, are necessary for construction activities, access fills, or dewatering of construction sites. Temporary fills must consist of materials, and be placed in a manner, that will not be eroded by expected high flows. Temporary fills must be removed in their entirety and the affected areas returned to pre-construction elevations. The areas affected by temporary fills must be revegetated, as appropriate.

D. This NWP does not authorize maintenance dredging for the primary purpose of navigation. This NWP does not authorize beach restoration. This NWP does not authorize new stream channelization or stream relocation projects.

Notification: For activities authorized by paragraph (b) of this NWP, the permittee must submit a pre—construction notification to the district engineer prior to commencing the activity (see general condition 31). The pre-construction notification must include information regarding the original design capacities and configurations of the outfalls, intakes, small impoundments, and canals. (Sections 10 and 404)

Note: This NWP authorizes the repair, rehabilitation, or replacement of any previously authorized structure or fill that does not qualify for the Clean Water Act Section 404(f) exemption for maintenance.

MISSISSIPPI DEPARTMENT OF TRANSPORTATION

SUPPLEMENT TO NOTICE TO BIDDERS NO. 6411

DATE: 06/06/2016

The goal is _6_ percent for the Disadvantaged Business Enterprise. The low bidder is required to submit Form OCR-481 for all DBEs. Bidders are advised to check the bid tabulation link for this project on the MDOT website at:

http://sp.gomdot.com/Contract%20Administration/BidSystems/Pages/letting%20calendar.aspx

Bid tabulations are usually posted by 3:00 pm on Letting Day.

MISSISSIPPI DEPARTMENT OF TRANSPORTATION

SECTION 904 - NOTICE TO BIDDERS NO. 6411 **CODE: (SP)**

DATE: **06/06/2016**

SUBJECT: DISADVANTAGED BUSINESS ENTERPRISES IN FEDERAL-AID HIGHWAY CONSTRUCTION

This contract is subject to the "Moving Ahead for Progress in the 21st Century Act (MAP-21)" and applicable requirements of "Part 26, Title 49, Code of Federal Regulations". Portions of the Act are set forth in this Notice as applicable to compliance by the Contractor and all of the Act, and the MDOT DBE Program, is incorporated by reference herein.

The Department has developed a Disadvantaged Business Enterprise Program that is applicable to this contract and is made a part thereof by reference.

Copies of the program may be obtained from:

Office of Civil Rights
Mississippi Department of Transportation
P. O. Box 1850
Jackson, Mississippi 39215-1850

POLICY

It is the policy of the Mississippi Department of Transportation to provide a level playing field, to foster equal opportunity in all federally assisted contracts, to improve the flexibility of the DBE Program, to reduce the burdens on small businesses, and to achieve that amount of participation that would be obtained in a non-discriminatory market place. In doing so, it is the policy of MDOT that there will be no discrimination in the award and performance of federally assisted contracts on the basis of race, color, sex, age, religion, national origin, or any handicap.

ASSURANCES THAT CONTRACTORS MUST TAKE

MDOT will require that each contract which MDOT signs with a sub-recipient or a Contractor, and each subcontract the Prime Contractor signs with a Subcontractor, includes the following assurances:

"The Contractor, subrecipient or Subcontractor shall not discriminate on the basis of race, color, national origin, or sex in the performance of this contract. The Contractor shall carry out applicable requirements of 49 CFR 26 in the award and administration of federally assisted contracts. Failure by the Contractor to carry out these requirements is a material breach of this contract, which may result in the termination of this contract or such other remedy as MDOT deems appropriate."

DEFINITIONS

For purposes of this provision the following definitions will apply:

"Disadvantaged Business" means a small business concern: (a) which is at least 51 percent owned by one or more socially and economically disadvantaged individual(s) or in the case of any publicly owned business, at least 51 percent of the stock of which is owned by one or more socially and economically disadvantaged individual(s); and (b) whose management and daily business operations are controlled by one or more of the socially and economically disadvantaged individual(s) who own it. It is important to note that the business owners themselves must control the operations of the business. Absentee ownership or title ownership by an individual who does not take an active role in controlling the business is not consistent with eligibility as a DBE under CFR 49 Part 26.71.

CONTRACTOR'S OBLIGATION

The Contractor and all Subcontractors shall take all necessary and reasonable steps to ensure that DBE firms can compete for and participate in the performance of a portion of the work in this contract and shall not discriminate on the basis of race, color, national origin, religion or sex. Failure on the part of the Contractor to carry out the DBE requirements of this contract constitutes a breach of contract and after proper notification the Department may terminate the contract or take other appropriate action as determined by the Department.

When a contract requires a zero percent (0%) DBE goal, the Contractor still has the responsibility to take all necessary and reasonable steps to ensure that DBE firms can compete for and participate in the performance of the work in the contract. In this case, all work performed by a certified DBE firm is considered to be a "race neutral" measure and the Department will receive DBE credit towards the overall State goals when the DBE firm is paid for their work. If the Prime Contractor is a certified DBE firm, the Department can receive DBE credit only for the work performed by the Prime Contractor's work force or any work subcontracted to another DBE firm. Work performance by a non-DBE Subcontractor is not eligible for DBE credit.

CONTRACT GOAL

The goal for participation by DBEs is established for this contract in the attached Supplement. The Contractor shall exercise all necessary and reasonable steps to ensure that participation is equal to or exceeds the contract goal.

If the percentage of the contract that is proposed for DBEs is 1% or greater, it shall be so stated on the last bid sheet of the proposal.

The apparent lowest responsive bidder shall submit to the Office of Civil Rights Form OCR-481, signed by the Prime Contractor and the DBE Subcontractors, no later than the 3rd business day after opening of the bids.

Form OCR-481 is available on the MDOT website at GoMDOT.com, then Divisions, Civil Rights, Forms, DBE, MDOT Projects, or by calling 601-359-7466.

FORMS ARE AVAILABLE FROM THE OFFICE OF CIVIL RIGHTS

The OCR-481 Form must contain the following information:

The name and address of each certified DBE Contractor / Supplier;

The Reference Number, percent of work and the dollar amount of each item. If a portion of an item is subcontracted, a breakdown of that item including quantities and unit price must be attached, detailing what part of the item the DBE firm is to perform and who will perform the remainder of the item.

If the DBE Commitment shown on the last bid sheet of the proposal, does not equal or exceed the contract goal, the bidder must submit, to MDOT Contract Administration Division prior to bid opening, information to satisfy the Department that adequate good faith efforts have been made to meet the contract goal.

Failure of the lowest bidder to furnish acceptable proof of good faith efforts, submitted to MDOT Contract Administration Division prior to bid opening, shall be just cause for rejection of the proposal. Award may then be made to the next lowest responsive bidder or the work may be re-advertised.

The following factors are illustrative of matters the Department will consider in judging whether or not the bidder has made adequate good faith effort to satisfy the contract goal.

(1) Whether the bidder attended the pre-bid meeting that was scheduled by the Department to inform DBEs of subcontracting opportunities;

(2) Whether the bidder advertised in general circulation, trade association, and minority-focus media concerning the subcontracting opportunities;

(3) Whether the bidder provided written notice to a reasonable number of specific DBEs that their interest in the contract is being solicited;

(4) Whether the bidder followed up initial solicitations of interest by contacting DBEs to determine with certainty whether they were interested;

(5) Whether the bidder selected portions of the work to be performed by DBEs in order to increase the likelihood of meeting the contract goal;

(6) Whether the bidder provided interested DBEs with adequate information about the plans, specifications and requirements of the contract;

(7) Whether the bidder negotiated in good faith with interested DBEs and did not reject them as unqualified without sound reasons based on a thorough investigation of their capabilities; and

(8) Whether the bidder made efforts to assist interested DBEs in obtaining any required bonding or insurance.

(9) Whether the bidder has written notification to certified DBE Contractors soliciting subcontracting for items of work in the contract.

(10) Whether the bidder has a statement of why an agreement was not reached.

The bidder's execution of the signature portion of the proposal shall constitute execution of the following assurance:

> The bidder hereby gives assurance pursuant to the applicable requirements of "Moving Ahead for Progress in the 21st Century Act (MAP-21)" and applicable requirements of "Part 26, Title 49, Code of Federal Regulations" that the bidder has made a good faith effort to meet the contract goal for DBE participation for which this proposal is submitted.

DIRECTORY

A list of "Certified DBE Contractors" which have been certified as such by the Mississippi Department of Transportation and other Unified Certification Partners (UPC) can be found on the Mississippi Department of Transportation website at www.gomdot.com. The DBE firm must be certified at the time the project is let and approved by MDOT to count towards meeting the DBE goal.

REPLACEMENT

If a DBE Subcontractor cannot perform satisfactorily, and this causes the OCR-481 commitment to fall below the contract goal, the Contractor shall take all necessary reasonable steps to replace the DBE with another certified DBE Subcontractor or submit information to satisfy the Mississippi Department of Transportation that adequate good faith efforts have been made to replace the DBE. The replacement DBE must be a DBE who was on the Department's list of "Certified DBE Contractors" when the job was let, and who is still active. All DBE replacements must be approved by the Department.

Under no circumstances shall the Prime or any Subcontractor perform the DBE's work (as shown on the OCR-481) without prior written approval from the Department. See "Sanctions" at the end of this document for penalties for performing DBE's work.

When a Contractor proposes to substitute/replace/terminate a DBE that was originally named on the OCR-481, the Contractor must obtain a release, in writing, from the named DBE explaining why the DBE Subcontractor cannot perform the work. A copy of the original DBE's release must be attached to the Contractor's written request to substitute/replace/terminate along with appropriate Subcontract Forms for the substitute/replacement/terminated Subcontractor, all of which must be submitted to the DBE Coordinator and approved, in advance, by MDOT.

GOOD FAITH EFFORTS

To demonstrate good faith efforts to replace any DBE that is unable to perform successfully, the Contractor must document steps taken to subcontract with another certified DBE Contractor. Such documentation shall include no less than the following:

(1) Proof of written notification to certified DBE Contractors by certified mail that their interest is solicited in subcontracting the work defaulted by the previous DBE or in subcontracting other items of work in the contract.

(2) If the Prime Contractor is a certified DBE firm, only the value of the work actually performed by the DBE Prime can be counted towards the project goal, along with any work subcontracted to a certified DBE firm.

(3) If the Contractor is not a DBE, the work subcontracted to a certified DBE Contractor will be counted toward the goal.

(4) The Contractor may count toward the goal a portion of the total dollar value of a contract with a joint venture eligible under the standards of this provision equal to the percentage of the DBE partner in the joint venture.

(5) Expenditures to DBEs that perform a commercially useful function may be counted toward the goal. A business is considered to perform a commercially useful function when it is responsible for the execution of a distinct element of the work and carries out its responsibilities by actually performing, managing, and supervising the work involved.

(6) The Contractor may count 100% of the expenditures for materials and supplies obtained from certified DBE suppliers and manufacturers that produce goods from raw materials or substantially alters them for resale provided the suppliers and manufacturers assume the actual and contractual responsibility for the provision of the materials and supplies. The Contractor may count sixty percent (60%) of the expenditures to suppliers that are not manufacturers, provided the supplier performs a commercially useful function in the supply process. Within 30 days after receipt of the materials, the Contractor shall furnish to the DBE Coordinator invoices from the certified supplier to verify the DBE goal.

(7) Any work that a certified DBE firm subcontracts or sub-subcontracts to a non-DBE firm will not count towards the DBE goal.

(8) Only the dollars actually paid to the DBE firm may be counted towards the DBE goal.

Failure of the Contractor to demonstrate good faith efforts to replace a DBE Subcontractor that cannot perform as intended with another DBE Subcontractor, when required, shall be a breach of contract and may be just cause to be disqualified from further bidding for a period of up to 12 months after notification by certified mail.

PRE-BID MEETING

A pre-bid meeting will be held in Amphitheater 1 & 2 of the Hilton Jackson located at I-55 and County Line Road, Jackson, Mississippi at 2:00 P.M. on the day preceding the date of the bid opening.

This meeting is to inform DBE firms of subcontracting and material supply opportunities. Attendance at this meeting is considered of prime importance in demonstrating good faith effort to meet the contract goal.

PARTICIPATION / DBE CREDIT

Participation shall be counted toward meeting the goal in this contract as follows:

(1) If the Prime Contractor is a certified DBE firm, only the value of the work actually performed by the DBE Prime can be counted towards the project goal, along with any work subcontracted to a certified DBE firm.

(2) If the Contractor is not a DBE, the work subcontracted to a certified DBE Contractor will be counted toward the goal.

(3) The Contractor may count toward the goal a portion of the total dollar value of a contract with a joint venture eligible under the standards of this provision equal to the percentage of the DBE partner in the joint venture.

(4) Expenditures to DBEs that perform a commercially useful function may be counted toward the goal. A business is considered to perform a commercially useful function when it is responsible for the execution of a distinct element of the work and carries out its responsibilities by actually performing, managing, and supervising the work involved.

(5) The Contractor may count 100% of the expenditures for materials and supplies obtained from certified DBE suppliers and manufacturers that produce goods from raw materials or substantially alters them for resale provided the suppliers and manufacturers assume the actual and contractual responsibility for the provision of the materials and supplies. The Contractor may count sixty percent (60%) of the expenditures to suppliers that are not manufacturers, provided the supplier performs a commercially useful function in the supply process. Within 30 days after receipt of the materials, the Contractor shall furnish to the DBE Coordinator invoices from the certified supplier to verify the DBE goal.

(6) Any work that a certified DBE firm subcontracts or sub-subcontracts to a non-DBE firm will not count towards the DBE goal.

(7) Only the dollars actually paid to the DBE firm may be counted towards the DBE goal.

AWARD

Award of this contract to the low bidder will be contingent upon the following conditions:

(1) Concurrence from Federal Highway Administration, when applicable.

(2) Bidder must submit to the Office of Civil Rights for approval, Form OCR-481 (DBE Commitment) no later than the 3rd business day after opening of the bids to satisfy the Department and that adequate good faith efforts have been made to meet the contract goal. For answers to questions regarding Form OCR-481, contact the MDOT Office of Civil Rights at (601) 359-7466.

(3) Bidder must include OCR-485 information with their bid proposal listing all firms that submitted quotes for material supplies or items to be subcontracted. OCR-485 information must be included with the bid proposal. If the OCR-485 information is not included as part of bid proposal, your bid will be deemed irregular.

Prior to the start of any work, the bidder must notify the Project Engineer, in writing, of the name of the designated "DBE Liaison Officer" for this project. This notification must be posted on the bulletin board at the project site.

DEFAULT

If the contract goal established by MDOT in this proposal is 1% or greater, it must be met to fulfill the terms of the contract. The Contractor may list DBE Subcontractors and items that exceed MDOT's contract goal, but should unforeseen problems arise that would prevent a DBE from completing its total commitment percentage, the Contractor will meet the terms of the contract as long as it meets or exceeds MDOT's Contract Goal. For additional information, refer to "Replacement" section of this Notice.

DBE REPORTS

(1) OCR-481: Refer to "CONTRACT GOAL" section of this Notice to Bidders for information regarding this form.

(2) OCR-482: At the conclusion of the project the Contractor will submit to the Project Engineer for verification of quantities and further handling Form OCR-482 whereby the Contractor certifies to the amounts of payments made to each Contractor / Supplier. The Project Engineer shall submit the completed Form OCR-482 to the DBE Coordinator (Office of Civil Rights). Final acceptance of the project is dependent upon Contract Administration Division's receipt of completed Form OCR-482 which they will receive from the Office of Civil Rights.

(3) OCR-483: The Project Engineer/Inspector will complete Form OCR-483, the Commercially Useful Function (CUF) Performance Report, in accordance with MDOT S.O.P. No. OCR-03-09-01-483. Evaluations reported on this form are used to determine whether or not the DBE firm is performing a CUF. The Prime Contractor should take

corrective action when the report contains any negative evaluations. DBE credit may be disallowed and/or other sanctions imposed if it is determined the DBE firm is not performing a CUF. This form should also be completed and returned to the DBE Coordinator (Office of Civil Rights).

(4) OCR-484: Each month, the Contractor will submit to the Project Engineer OCR-484 certifying payments to all Subcontractors. This OCR-484 will be attached to the monthly estimate for further processing. Failure of the Contractor to submit the OCR-484 will result in the estimate not being processed and paid.

(5) OCR-485: Bidder must submit **signed form with bid proposal** of all firms that submitted quotes for material supplies or items to be subcontracted. If the OCR-485 information is not included as part of bid proposal, your bid will be deemed irregular.

(6) OCR-487: Only used by Prime Contractors that are certified DBE firms. This form is used in determining the exact percentage of DBE credit for the specified project. It should be returned to MDOT with the OCR-481 form, or can also be returned with the Permission to Subcontract Forms (CAD-720, CAD-725 and CAD-521).

SANCTIONS

The Department has the option to enforce any of the following penalties for failure of the Prime Contractor to fulfill the DBE goal as stated on the OCR-481 form or any violations of the DBE program guidelines:

(1) Disallow credit towards the DBE goal

(2) Withhold progress estimate payments

(3) Deduct from the final estimate or recover an amount equal to the unmet portion of the DBE goal which may include additional monetary penalties as outlined below based on the number of offenses and the severity of the violation as determined by MDOT.

1st Offense	10% of unmet portion of goal	or	$5,000 lump sum payment	or	Both
2nd Offense	20% of unmet portion of goal	or	$10,000 lump sum payment	or	Both
3rd Offense	40% of unmet portion of goal	or	$20,000 lump sum payment	or	$20,000 lump sum payment and debarment

(4) Debar the Contractor involved from bidding on Mississippi Department of Transportation projects.

MISSISSIPPI DEPARTMENT OF TRANSPORTATION

SECTION 904 - NOTICE TO BIDDERS NO. 6447 **CODE: (SP)**

DATE: **06/03/2016**

SUBJECT: **Contract Time**

PROJECT: **BR-0055-04(103) / 107214302 - Tate County**

The calendar date for completion of work to be performed by the Contractor for this project shall be **November 30, 2016** which date or extended date as provided in Subsection 907-108.06 shall be the end of contract time. It is anticipated that the Notice of Award will be issued no later than **August 9, 2016** and the effective date of the Notice to Proceed / Beginning of Contract Time will be **upon concurrence of the Contractor's Erosion Control Plan & execution of the Contract Documents, but no later than September 8, 2016**.

Should the Contractor request a Notice to Proceed earlier than **September 8, 2016** and it is agreeable with the Department for an early Notice to Proceed, the requested date will become the new Notice to Proceed / Beginning of Contract Time date. If the Contractor wishes to pursue the Early Notice to Proceed, The Department will make every effort to expedite the review of the submitted Erosion Control Plan.

MISSISSIPPI DEPARTMENT OF TRANSPORTATION

SECTION 904 - NOTICE TO BIDDERS NO. 6448

DATE: 6/06/2016

SUBJECT: Specialty Items

PROJECT: BR-0055-04(103)/107214302 - TATE

Pursuant to the provisions of Section 108, the following work items are hereby designated as "Specialty Items" for this contract. Bidders are reminded that these items must be subcontracted in order to be considered as specialty items.

CATEGORY: DISPOSAL OF BUILDINGS, RIGHT OF WAY CLEA

Line No	Pay Item	Description
0020	202-B076	Removal of Traffic Stripe

CATEGORY: EROSION CONTROL

Line No	Pay Item	Description
0060	213-B001	Combination Fertilizer, 13-13-13
0070	213-C001	Superphosphate
0080	217-A001	Ditch Liner
0090	223-A001	Mowing
0100	234-A001	Temporary Silt Fence
0270	907-225-A001	Grassing
0280	907-225-B001	Agricultural Limestone
0290	907-225-C001	Mulch, Vegetative Mulch
0300	907-226-A001	Temporary Grassing
0310	907-234-D001	Inlet Siltation Guard
0320	907-234-F001	Turbidity Barrier
0330	907-237-A003	Wattles, 20"
0340	907-249-A001	Riprap for Erosion Control

CATEGORY: GUARDRAIL, GUIDERAIL

Line No	Pay Item	Description
0110	606-B001	Guard Rail, Class A, Type 1
0120	606-D001	Guard Rail, Bridge End Section, Type A
0130	606-E003	Guard Rail, Terminal End Section, Non-Flared

CATEGORY: PAVEMENT STRIPING AND MARKING

Line No	Pay Item	Description
0250	627-F001	One-Way Yellow Reflective Raised Markers
0450	907-626-E003	6" Thermoplastic Traffic Stripe, Continuous Yellow

CATEGORY: TRAFFIC CONTROL - PERMANENT

Line No	Pay Item	Description

CATEGORY: TRAFFIC CONTROL - PERMANENT

Line No	Pay Item	Description
0260	630-F001	Delineators, Guard Rail, White
0460	907-630-O006	Remove and Reset Signs, Post Mounted

CATEGORY: TRAFFIC CONTROL - TEMPORARY

Line No	Pay Item	Description
0140	619-A1001	Temporary Traffic Stripe, Continuous White
0150	619-A1009	Temporary Traffic Stripe, Continuous White, Type 2 Tape
0160	619-A2001	Temporary Traffic Stripe, Continuous Yellow
0170	619-A2009	Temporary Traffic Stripe, Continuous Yellow, Type 2 Tape
0180	619-D1001	Standard Roadside Construction Signs, Less than 10 Square Feet
0190	619-D2001	Standard Roadside Construction Signs, 10 Square Feet or More
0200	619-F2001	Remove and Reset Concrete Median Barrier, Precast
0210	619-G4001	Barricades, Type III, Single Faced
0220	619-G5001	Free Standing Plastic Drums
0230	619-G7001	Warning Lights, Type "B"
0430	907-619-E3001	Changeable Message Sign
0440	907-619-P1001	Glare Paddles

MISSISSIPPI DEPARTMENT OF TRANSPORTATION

SECTION 904 - NOTICE TO BIDDERS NO. 6449 **CODE: (SP)**

DATE: **06/08/2016**

SUBJECT: **Additional Construction Requirements**

PROJECT: **BR-0055-04(103)/107214302-Tate County**

Bidders are hereby advised of the following construction requirements.

The Contractor is advised that the 20" steel pipe pile lengths provided in the project's plans are order lengths, not estimated lengths. It is anticipated that the Contractor order these lengths following notice of award of the project. The Contractor is also advised that the Department shall run PDA test on each of the production 20" steel pipe piles. Bidders are advised to consider clearance for the Department's PDA equipment when selecting Pile driving equipment. All costs to the Contractor regarding the PDA tests shall be absorbed in the 20" steel pipe pile pay item.

The Contractor is advised that the emergency cross overs shall be constructed through the placement of all asphalt prior to any pile driving taking place.

MISSISSIPPI DEPARTMENT OF TRANSPORTATION

SECTION 904 - NOTICE TO BIDDERS NO. 6535 **CODE: (SP)**

DATE: **06/28/2016**

SUBJECT: **Contract Modifications**

PROJECT: **BR-0055-04(103)/107214302-Tate County**

Bidders are advised of the following changes regarding pay items:

- The Summary of Quantities sheets in the Plans reference pay item 907-615-B001, Precast Concrete Median Barrier, State Furnished. This is in error. Payment for the Precast Concrete Median Barrier shall be made using pay item 619-F1001, Concrete Median Barrier, Precast, State Furnished with a quantity of 4,320 L.F. The bid items have been corrected to reflect this change.

General Decision Number: MS160246 01/08/2016 MS246

Superseded General Decision Number: MS20150246

State: Mississippi

Construction Type: Highway

County: Tate County in Mississippi.

HIGHWAY CONSTRUCTION PROJECTS

Note: Under Executive Order (EO) 13658, an hourly minimum wage of $10.15 for calendar year 2016 applies to all contracts subject to the Davis-Bacon Act for which the solicitation was issued on or after January 1, 2015. If this contract is covered by the EO, the contractor must pay all workers in any classification listed on this wage determination at least $10.15 (or the applicable wage rate listed on this wage determination, if it is higher) for all hours spent performing on the contract in calendar year 2016. The EO minimum wage rate will be adjusted annually. Additional information on contractor requirements and worker protections under the EO is available at www.dol.gov/whd/govcontracts.

Modification Number	Publication Date
0	01/08/2016

SUMS2010-065 08/04/2014

	Rates	Fringes
CARPENTER (Form Work Only)	$ 13.00	0.24
CEMENT MASON/CONCRETE FINISHER	$ 12.85	0.39
ELECTRICIAN	$ 23.78	7.38
FENCE ERECTOR (Barbed Wire, Wood, Silt)	$ 9.29	0.00
HIGHWAY/PARKING LOT STRIPING: Truck Driver (Line Striping Truck)	$ 18.45	0.00
INSTALLER - GUARDRAIL	$ 12.00	0.00
IRONWORKER, REINFORCING	$ 15.57	0.00
LABORER: Common or General, Including Asphalt Raking, Shoveling, Spreading; Concrete Work; Grade Checking; and Mason Tending - Cement/Concrete	$ 10.40	0.00
LABORER: Flagger	$ 9.59	0.00

LABORER: Landscape.....$ 9.19 0.00

LABORER: Luteman.....$ 12.88 0.00

LABORER: Pipelayer.....$ 12.93 0.00

LABORER: Laborer-Cones/
Barricades/Barrels -
Setter/Mover/Sweeper.....$ 10.25 0.00

OPERATOR: Asphalt Spreader.....$ 14.71 0.00

OPERATOR:
Backhoe/Excavator/Trackhoe.....$ 13.86 0.00

OPERATOR: Bobcat/Skid
Steer/Skid Loader.....$ 11.64 0.00

OPERATOR: Broom/Sweeper.....$ 12.82 0.00

OPERATOR: Bulldozer.....$ 13.35 0.00

OPERATOR: Crane.....$ 19.97 0.00

OPERATOR: Grader/Blade.....$ 13.39 0.00

OPERATOR: Loader.....$ 13.54 0.00

OPERATOR: Mechanic.....$ 20.92 0.00

OPERATOR: Milling Machine.....$ 16.20 0.00

OPERATOR: Oiler.....$ 9.50 0.00

OPERATOR: Paver (Asphalt,
Aggregate, and Concrete).....$ 11.78 0.00

OPERATOR: Roller (All Types)....$ 13.07 0.00

OPERATOR: Scraper.....$ 12.25 0.00

OPERATOR: Tractor.....$ 9.52 0.00

PILEDRIVERMAN.....$ 12.50 1.23

TRUCK DRIVER: Flatbed Truck.....$ 13.00 0.00

TRUCK DRIVER: Lowboy Truck.....$ 12.43 0.00

TRUCK DRIVER: Mechanic.....$ 13.00 0.00

TRUCK DRIVER: Water Truck.....$ 14.49 0.00

TRUCK DRIVER: Dump Truck (All
Types).....$ 12.66 0.00

TRUCK DRIVER: Semi/Trailer
Truck.....$ 15.22 0.00

WELDERS - Receive rate prescribed for craft performing operation to which welding is incidental.

==========

Unlisted classifications needed for work not included within the scope of the classifications listed may be added after award only as provided in the labor standards contract clauses (29CFR 5.5 (a) (1) (ii)).

The body of each wage determination lists the classification and wage rates that have been found to be prevailing for the cited type(s) of construction in the area covered by the wage determination. The classifications are listed in alphabetical order of "identifiers" that indicate whether the particular rate is a union rate (current union negotiated rate for local), a survey rate (weighted average rate) or a union average rate (weighted union average rate).

Union Rate Identifiers

A four letter classification abbreviation identifier enclosed in dotted lines beginning with characters other than "SU" or "UAVG" denotes that the union classification and rate were prevailing for that classification in the survey. Example: PLUM0198-005 07/01/2014. PLUM is an abbreviation identifier of the union which prevailed in the survey for this classification, which in this example would be Plumbers. 0198 indicates the local union number or district council number where applicable, i.e., Plumbers Local 0198. The next number, 005 in the example, is an internal number used in processing the wage determination. 07/01/2014 is the effective date of the most current negotiated rate, which in this example is July 1, 2014.

Union prevailing wage rates are updated to reflect all rate changes in the collective bargaining agreement (CBA) governing this classification and rate.

Survey Rate Identifiers

Classifications listed under the "SU" identifier indicate that no one rate prevailed for this classification in the survey and the published rate is derived by computing a weighted average rate based on all the rates reported in the survey for that classification. As this weighted average rate includes all rates reported in the survey, it may include both union and non-union rates. Example: SULA2012-007 5/13/2014. SU indicates the rates are survey rates based on a weighted average calculation of rates and are not majority rates. LA indicates the State of Louisiana. 2012 is the year of survey on which these classifications and rates are based. The next number, 007 in the example, is an internal number used in producing the wage determination. 5/13/2014 indicates the survey completion date for the classifications and rates under that identifier.

Survey wage rates are not updated and remain in effect until a new survey is conducted.

Union Average Rate Identifiers

Classification(s) listed under the UAVG identifier indicate that no single majority rate prevailed for those classifications; however, 100% of the data reported for the classifications was union data. EXAMPLE: UAVG-OH-0010 08/29/2014. UAVG indicates that the rate is a weighted union average rate. OH indicates the state. The next number, 0010 in the example, is an internal number used in producing the wage determination. 08/29/2014 indicates the survey completion date for the classifications and rates under that identifier.

A UAVG rate will be updated once a year, usually in January of each year, to reflect a weighted average of the current negotiated/CBA rate of the union locals from which the rate is based.

WAGE DETERMINATION APPEALS PROCESS

1.) Has there been an initial decision in the matter? This can be:

* an existing published wage determination
* a survey underlying a wage determination
* a Wage and Hour Division letter setting forth a position on a wage determination matter
* a conformance (additional classification and rate) ruling

On survey related matters, initial contact, including requests for summaries of surveys, should be with the Wage and Hour Regional Office for the area in which the survey was conducted because those Regional Offices have responsibility for the Davis-Bacon survey program. If the response from this initial contact is not satisfactory, then the process described in 2.) and 3.) should be followed.

With regard to any other matter not yet ripe for the formal process described here, initial contact should be with the Branch of Construction Wage Determinations. Write to:

Branch of Construction Wage Determinations
Wage and Hour Division
U.S. Department of Labor
200 Constitution Avenue, N.W.
Washington, DC 20210

2.) If the answer to the question in 1.) is yes, then an interested party (those affected by the action) can request review and reconsideration from the Wage and Hour Administrator (See 29 CFR Part 1.8 and 29 CFR Part 7). Write to:

Wage and Hour Administrator

U.S. Department of Labor
200 Constitution Avenue, N.W.
Washington, DC 20210

The request should be accompanied by a full statement of the interested party's position and by any information (wage payment data, project description, area practice material, etc.) that the requestor considers relevant to the issue.

3.) If the decision of the Administrator is not favorable, an interested party may appeal directly to the Administrative Review Board (formerly the Wage Appeals Board). Write to:

Administrative Review Board
U.S. Department of Labor
200 Constitution Avenue, N.W.
Washington, DC 20210

4.) All decisions by the Administrative Review Board are final.

==========

END OF GENERAL DECISION

SUPPLEMENT TO FORM FHWA-1273

DATE: **01/06/2016**

SUBJECT: **Final Certificate and Contract Provisions for Subcontracts**

All subcontracts shall be in writing and contain all pertinent provisions and requirements of the prime contract.

Each "Request for Permission to Subcontract" (Mississippi Department of Transportation Form CAD-720) shall include a copy of subcontract upon request for review by the Mississippi Department of Transportation. The federal contract provisions may be omitted from the subcontract copy submitted for review provided the Contractor certifies that the provisions will be physically incorporated into the agreement furnished to the Subcontractor.

In lieu of submitting a copy of the subcontract for review, the Contractor may certify that the subcontract agreement is in writing and that it contains all the requirements and pertinent provisions of the prime contract.

Each Subcontractor will be required to provide a copy of the subcontract agreement for contract compliance reviews, along with physical evidence (copy of FHWA-1273) that requirements and pertinent provisions have been provided for review and adherence.

The Contractor is hereby advised of the requirements set forth in the following Attachment (Title 46 - Shipping) as it pertains to the implementation of Cargo Preference Act (CPA) requirements in the Federal-aid Highway Program.

By signing this contract, the Contractor agrees to conform to the requirements of the CPA.

Attachment

Title 46- Shipping

Volume: 8
Date: 2014-10-01
Original Date: 2014-10-01
Title: Section 381.7 - Federal Grant, Guaranty, Loan and Advance at Funds Agreements.
Context: Title 46- Shipping. CHAPTER II- MARITIME ADMINISTRATION, DEPARTMENT OF TRANSPORTATION. SUBCHAPTER J - MISCELLANEOUS. PART 381 - CARGO PREFERENCE-U.S.-FLAG VESSELS.

§ 381.7 Federal Grant, Guaranty, Loan and Advance of Funds Agreements.

In order to insure a fair and reasonable participation by privately owned United States-flag commercial vessels in transporting cargoes which are subject to the Cargo Preference Act of 1954 and which are generated by U.S. Government Grant, Guaranty, Loan and/or Advance of Funds Programs, the head of each affected department or agency shall require appropriate clauses to be inserted in those Grant. Guaranty[1] Loan and/or Advance of Funds Agreements and all third party contracts executed between the borrower/grantee and other parties, where the possibility exists for ocean transportation of items procured, contracted for or otherwise obtained by or on behalf of the grantee, borrower, or any of their contractors or subcontractors. The clauses required by this part shall provide that at least 50 percent of the freight revenue and tonnage of cargo generated by the U.S. Government Grant, Guaranty, Loan or Advance of Funds be transported on privately owned United States-flag commercial vessels. These clauses shall also require that all parties provide to the Maritime Administration the necessary shipment information as set forth in § 381.3. A copy of the appropriate clauses required by this part shall be submitted by each affected agency or department to the Secretary, Maritime Administration, for approval no later than 30 days after the effective date of this part. The following are suggested acceptable clauses with respect to the use of United States-flag vessels to be incorporated in the Grant, Guaranty, Loan and/or Advance of Funds Agreements as well as contracts and subcontracts resulting therefrom:

(a) *Agreement Clauses.* "Use of United States-flag vessels:

"(1) Pursuant to Pub. L 664 (43 U.S.C. 1241(b)) at least 50 percent of any equipment, materials or commodities procured, contracted for or otherwise obtained with funds granted, guaranteed, loaned, or advanced by the U.S. Government under this agreement, and which may be transported by ocean vessel, shall be transported on privately owned United States-flag commercial vessels, if available.

"(2) Within 20 days following the date of loading for shipments originating within the United States or within 30 working days following the date of loading for shipments originating outside the United States, a legible copy of a rated, 'on-board' commercial ocean bill-of-lading in English for each shipment of cargo described in paragraph (a)(1) of this section shall be furnished to both the Contracting Officer (through the prime contractor in the case of subcontractor bills-of-lading) and to the Division of National Cargo, Office of Market Development, Maritime Administration, Washington, DC 20590."

(b) *Contractor and Subcontractor Clauses.* "Use of United States-flag vessels: The contractor agrees --

"(1) To utilize privately owned United States-flag commercial vessels to ship at least 50 percent of the gross tonnage (computed separately for dry bulk carriers, dry cargo liners, and tankers) involved, whenever shipping any equipment, material, or commodities pursuant to this contract, to the extent such vessels are available at fair and reasonable rates for United States-flag commercial vessels.

"(2) To furnish within 20 days following the date of loading for shipments originating within the United

States or within 30 working days following the date of loading for shipments originating outside the United States, a legible copy of a rated, 'on-board' commercial ocean bill-of-lading in English for each shipment of cargo described in paragraph (b) (1) of this section to both the Contracting Officer (through the prime contractor in the case of subcontractor bills-of-lading) and to the Division of National Cargo, Office of Market Development, Maritime Administration, Washington, DC 20590.

"(3) To insert the substance of the provisions of this clause in all subcontracts issued pursuant to this contract."

(Reorganization Plans No.21 of 1950(64 Stat. 1273) and No. 7 of 1961 (75 Stat. 840) as amended by Pub. L 91.469 (84 Stat 1036) and Department of Commerce Organization Order 10-8 (38 FR 19707, July 23, 1973)) (42 FR 57126, Nov. 1, 1977]

REQUIRED CONTRACT PROVISIONS
FEDERAL-AID CONSTRUCTION CONTRACTS

I. General
II. Nondiscrimination
III. Nonsegregated Facilities
IV. Davis-Bacon and Related Act Provisions
V. Contract Work Hours and Safety Standards Act Provisions
VI. Subletting or Assigning the Contract
VII. Safety: Accident Prevention
VIII. False Statements Concerning Highway Projects
IX. Implementation of Clean Air Act and Federal Water Pollution Control Act
X. Compliance with Governmentwide Suspension and Debarment Requirements
XI. Certification Regarding Use of Contract Funds for Lobbying

ATTACHMENTS

A. Employment and Materials Preference for Appalachian Development Highway System or Appalachian Local Access Road Contracts (included in Appalachian contracts only)

I. GENERAL

1. Form FHWA-1273 must be physically incorporated in each construction contract funded under Title 23 (excluding emergency contracts solely intended for debris removal). The contractor (or subcontractor) must insert this form in each subcontract and further require its inclusion in all lower tier subcontracts (excluding purchase orders, rental agreements and other agreements for supplies or services).

The applicable requirements of Form FHWA-1273 are incorporated by reference for work done under any purchase order, rental agreement or agreement for other services. The prime contractor shall be responsible for compliance by any subcontractor, lower-tier subcontractor or service provider.

Form FHWA-1273 must be included in all Federal-aid design-build contracts, in all subcontracts and in lower tier subcontracts (excluding subcontracts for design services, purchase orders, rental agreements and other agreements for supplies or services). The design-builder shall be responsible for compliance by any subcontractor, lower-tier subcontractor or service provider.

Contracting agencies may reference Form FHWA-1273 in bid proposal or request for proposal documents, however, the Form FHWA-1273 must be physically incorporated (not referenced) in all contracts, subcontracts and lower-tier subcontracts (excluding purchase orders, rental agreements and other agreements for supplies or services related to a construction contract).

2. Subject to the applicability criteria noted in the following sections, these contract provisions shall apply to all work performed on the contract by the contractor's own organization and with the assistance of workers under the contractor's immediate superintendence and to all work performed on the contract by piecework, station work, or by subcontract.

3. A breach of any of the stipulations contained in these Required Contract Provisions may be sufficient grounds for withholding of progress payments, withholding of final payment, termination of the contract, suspension / debarment or any other action determined to be appropriate by the contracting agency and FHWA.

4. Selection of Labor: During the performance of this contract, the contractor shall not use convict labor for any purpose within the limits of a construction project on a Federal-aid highway unless it is labor performed by convicts who are on parole, supervised release, or probation. The term Federal-aid highway does not include roadways functionally classified as local roads or rural minor collectors.

II. NONDISCRIMINATION

The provisions of this section related to 23 CFR Part 230 are applicable to all Federal-aid construction contracts and to all related construction subcontracts of $10,000 or more. The provisions of 23 CFR Part 230 are not applicable to material supply, engineering, or architectural service contracts.

In addition, the contractor and all subcontractors must comply with the following policies: Executive Order 11246, 41 CFR 60, 29 CFR 1625-1627, Title 23 USC Section 140, the Rehabilitation Act of 1973, as amended (29 USC 794), Title VI of the Civil Rights Act of 1964, as amended, and related regulations including 49 CFR Parts 21, 26 and 27; and 23 CFR Parts 200, 230, and 633.

The contractor and all subcontractors must comply with: the requirements of the Equal Opportunity Clause in 41 CFR 60-1.4(b) and, for all construction contracts exceeding $10,000, the Standard Federal Equal Employment Opportunity Construction Contract Specifications in 41 CFR 60-4.3.

Note: The U.S. Department of Labor has exclusive authority to determine compliance with Executive Order 11246 and the policies of the Secretary of Labor including 41 CFR 60, and 29 CFR 1625-1627. The contracting agency and the FHWA have the authority and the responsibility to ensure compliance with Title 23 USC Section 140, the Rehabilitation Act of 1973, as amended (29 USC 794), and Title VI of the Civil Rights Act of 1964, as amended, and related regulations including 49 CFR Parts 21, 26 and 27; and 23 CFR Parts 200, 230, and 633.

The following provision is adopted from 23 CFR 230, Appendix A, with appropriate revisions to conform to the U.S. Department of Labor (US DOL) and FHWA requirements.

1. Equal Employment Opportunity: Equal employment opportunity (EEO) requirements not to discriminate and to take affirmative action to assure equal opportunity as set forth under laws, executive orders, rules, regulations (28 CFR 35, 29 CFR 1630, 29 CFR 1625-1627, 41 CFR 60 and 49 CFR 27) and orders of the Secretary of Labor as modified by the provisions prescribed herein, and imposed pursuant to 23 U.S.C. 140 shall constitute the EEO and specific affirmative action standards for the contractor's project activities under

this contract. The provisions of the Americans with Disabilities Act of 1990 (42 U.S.C. 12101 et seq.) set forth under 28 CFR 35 and 29 CFR 1630 are incorporated by reference in this contract. In the execution of this contract, the contractor agrees to comply with the following minimum specific requirement activities of EEO:

a. The contractor will work with the contracting agency and the Federal Government to ensure that it has made every good faith effort to provide equal opportunity with respect to all of its terms and conditions of employment and in their review of activities under the contract.

b. The contractor will accept as its operating policy the following statement:

"It is the policy of this Company to assure that applicants are employed, and that employees are treated during employment, without regard to their race, religion, sex, color, national origin, age or disability. Such action shall include: employment, upgrading, demotion, or transfer; recruitment or recruitment advertising; layoff or termination; rates of pay or other forms of compensation; and selection for training, including apprenticeship, pre-apprenticeship, and/or on-the-job training."

2. EEO Officer: The contractor will designate and make known to the contracting officers an EEO Officer who will have the responsibility for and must be capable of effectively administering and promoting an active EEO program and who must be assigned adequate authority and responsibility to do so.

3. Dissemination of Policy: All members of the contractor's staff who are authorized to hire, supervise, promote, and discharge employees, or who recommend such action, or who are substantially involved in such action, will be made fully cognizant of, and will implement, the contractor's EEO policy and contractual responsibilities to provide EEO in each grade and classification of employment. To ensure that the above agreement will be met, the following actions will be taken as a minimum:

a. Periodic meetings of supervisory and personnel office employees will be conducted before the start of work and then not less often than once every six months, at which time the contractor's EEO policy and its implementation will be reviewed and explained. The meetings will be conducted by the EEO Officer.

b. All new supervisory or personnel office employees will be given a thorough indoctrination by the EEO Officer, covering all major aspects of the contractor's EEO obligations within thirty days following their reporting for duty with the contractor.

c. All personnel who are engaged in direct recruitment for the project will be instructed by the EEO Officer in the contractor's procedures for locating and hiring minorities and women.

d. Notices and posters setting forth the contractor's EEO policy will be placed in areas readily accessible to employees, applicants for employment and potential employees.

e. The contractor's EEO policy and the procedures to implement such policy will be brought to the attention of employees by means of meetings, employee handbooks, or other appropriate means.

4. Recruitment: When advertising for employees, the contractor will include in all advertisements for employees the notation: "An Equal Opportunity Employer." All such advertisements will be placed in publications having a large circulation among minorities and women in the area from which the project work force would normally be derived.

a. The contractor will, unless precluded by a valid bargaining agreement, conduct systematic and direct recruitment through public and private employee referral sources likely to yield qualified minorities and women. To meet this requirement, the contractor will identify sources of potential minority group employees, and establish with such identified sources procedures whereby minority and women applicants may be referred to the contractor for employment consideration.

b. In the event the contractor has a valid bargaining agreement providing for exclusive hiring hall referrals, the contractor is expected to observe the provisions of that agreement to the extent that the system meets the contractor's compliance with EEO contract provisions. Where implementation of such an agreement has the effect of discriminating against minorities or women, or obligates the contractor to do the same, such implementation violates Federal nondiscrimination provisions.

c. The contractor will encourage its present employees to refer minorities and women as applicants for employment. Information and procedures with regard to referring such applicants will be discussed with employees.

5. Personnel Actions: Wages, working conditions, and employee benefits shall be established and administered, and personnel actions of every type, including hiring, upgrading, promotion, transfer, demotion, layoff, and termination, shall be taken without regard to race, color, religion, sex, national origin, age or disability. The following procedures shall be followed:

a. The contractor will conduct periodic inspections of project sites to insure that working conditions and employee facilities do not indicate discriminatory treatment of project site personnel.

b. The contractor will periodically evaluate the spread of wages paid within each classification to determine any evidence of discriminatory wage practices.

c. The contractor will periodically review selected personnel actions in depth to determine whether there is evidence of discrimination. Where evidence is found, the contractor will promptly take corrective action. If the review indicates that the discrimination may extend beyond the actions reviewed, such corrective action shall include all affected persons.

d. The contractor will promptly investigate all complaints of alleged discrimination made to the contractor in connection with its obligations under this contract, will attempt to resolve such complaints, and will take appropriate corrective action within a reasonable time. If the investigation indicates that the discrimination may affect persons other than the complainant, such corrective action shall include such other persons. Upon completion of each investigation, the contractor will inform every complainant of all of their avenues of appeal.

6. Training and Promotion:

a. The contractor will assist in locating, qualifying, and increasing the skills of minorities and women who are

applicants for employment or current employees. Such efforts should be aimed at developing full journey level status employees in the type of trade or job classification involved.

b. Consistent with the contractor's work force requirements and as permissible under Federal and State regulations, the contractor shall make full use of training programs, i.e., apprenticeship, and on-the-job training programs for the geographical area of contract performance. In the event a special provision for training is provided under this contract, this subparagraph will be superseded as indicated in the special provision. The contracting agency may reserve training positions for persons who receive welfare assistance in accordance with 23 U.S.C. 140(a).

c. The contractor will advise employees and applicants for employment of available training programs and entrance requirements for each.

d. The contractor will periodically review the training and promotion potential of employees who are minorities and women and will encourage eligible employees to apply for such training and promotion.

7. Unions: If the contractor relies in whole or in part upon unions as a source of employees, the contractor will use good faith efforts to obtain the cooperation of such unions to increase opportunities for minorities and women. Actions by the contractor, either directly or through a contractor's association acting as agent, will include the procedures set forth below:

a. The contractor will use good faith efforts to develop, in cooperation with the unions, joint training programs aimed toward qualifying more minorities and women for membership in the unions and increasing the skills of minorities and women so that they may qualify for higher paying employment.

b. The contractor will use good faith efforts to incorporate an EEO clause into each union agreement to the end that such union will be contractually bound to refer applicants without regard to their race, color, religion, sex, national origin, age or disability.

c. The contractor is to obtain information as to the referral practices and policies of the labor union except that to the extent such information is within the exclusive possession of the labor union and such labor union refuses to furnish such information to the contractor, the contractor shall so certify to the contracting agency and shall set forth what efforts have been made to obtain such information.

d. In the event the union is unable to provide the contractor with a reasonable flow of referrals within the time limit set forth in the collective bargaining agreement, the contractor will, through independent recruitment efforts, fill the employment vacancies without regard to race, color, religion, sex, national origin, age or disability; making full efforts to obtain qualified and/or qualifiable minorities and women. The failure of a union to provide sufficient referrals (even though it is obligated to provide exclusive referrals under the terms of a collective bargaining agreement) does not relieve the contractor from the requirements of this paragraph. In the event the union referral practice prevents the contractor from meeting the obligations pursuant to Executive Order 11246, as amended, and these special provisions, such contractor shall immediately notify the contracting agency.

8. Reasonable Accommodation for Applicants / Employees with Disabilities: The contractor must be familiar with the requirements for and comply with the Americans with Disabilities Act and all rules and regulations established there under. Employers must provide reasonable accommodation in all employment activities unless to do so would cause an undue hardship.

9. Selection of Subcontractors, Procurement of Materials and Leasing of Equipment: The contractor shall not discriminate on the grounds of race, color, religion, sex, national origin, age or disability in the selection and retention of subcontractors, including procurement of materials and leases of equipment. The contractor shall take all necessary and reasonable steps to ensure nondiscrimination in the administration of this contract.

a. The contractor shall notify all potential subcontractors and suppliers and lessors of their EEO obligations under this contract.

b. The contractor will use good faith efforts to ensure subcontractor compliance with their EEO obligations.

10. Assurance Required by 49 CFR 26.13(b):

a. The requirements of 49 CFR Part 26 and the State DOT's U.S. DOT-approved DBE program are incorporated by reference.

b. The contractor or subcontractor shall not discriminate on the basis of race, color, national origin, or sex in the performance of this contract. The contractor shall carry out applicable requirements of 49 CFR Part 26 in the award and administration of DOT-assisted contracts. Failure by the contractor to carry out these requirements is a material breach of this contract, which may result in the termination of this contract or such other remedy as the contracting agency deems appropriate.

11. Records and Reports: The contractor shall keep such records as necessary to document compliance with the EEO requirements. Such records shall be retained for a period of three years following the date of the final payment to the contractor for all contract work and shall be available at reasonable times and places for inspection by authorized representatives of the contracting agency and the FHWA.

a. The records kept by the contractor shall document the following:

(1) The number and work hours of minority and non-minority group members and women employed in each work classification on the project;

(2) The progress and efforts being made in cooperation with unions, when applicable, to increase employment opportunities for minorities and women; and

(3) The progress and efforts being made in locating, hiring, training, qualifying, and upgrading minorities and women;

b. The contractors and subcontractors will submit an annual report to the contracting agency each July for the duration of the project, indicating the number of minority, women, and non-minority group employees currently engaged in each work classification required by the contract work. This information is to be reported on Form FHWA-1391. The staffing data should represent the project work force on board in all or any part of the last payroll period preceding the end of July. If on-the-job training is being required by special provision, the contractor

will be required to collect and report training data. The employment data should reflect the work force on board during all or any part of the last payroll period preceding the end of July.

III. NONSEGREGATED FACILITIES

This provision is applicable to all Federal-aid construction contracts and to all related construction subcontracts of $10,000 or more.

The contractor must ensure that facilities provided for employees are provided in such a manner that segregation on the basis of race, color, religion, sex, or national origin cannot result. The contractor may neither require such segregated use by written or oral policies nor tolerate such use by employee custom. The contractor's obligation extends further to ensure that its employees are not assigned to perform their services at any location, under the contractor's control, where the facilities are segregated. The term "facilities" includes waiting rooms, work areas, restaurants and other eating areas, time clocks, restrooms, washrooms, locker rooms, and other storage or dressing areas, parking lots, drinking fountains, recreation or entertainment areas, transportation, and housing provided for employees. The contractor shall provide separate or single-user restrooms and necessary dressing or sleeping areas to assure privacy between sexes.

IV. DAVIS-BACON AND RELATED ACT PROVISIONS

This section is applicable to all Federal-aid construction projects exceeding $2,000 and to all related subcontracts and lower-tier subcontracts (regardless of subcontract size). The requirements apply to all projects located within the right-of-way of a roadway that is functionally classified as Federal-aid highway. This excludes roadways functionally classified as local roads or rural minor collectors, which are exempt. Contracting agencies may elect to apply these requirements to other projects.

The following provisions are from the U.S. Department of Labor regulations in 29 CFR 5.5 “Contract provisions and related matters” with minor revisions to conform to the FHWA-1273 format and FHWA program requirements.

1. Minimum wages

a. All laborers and mechanics employed or working upon the site of the work, will be paid unconditionally and not less often than once a week, and without subsequent deduction or rebate on any account (except such payroll deductions as are permitted by regulations issued by the Secretary of Labor under the Copeland Act (29 CFR part 3)), the full amount of wages and bona fide fringe benefits (or cash equivalents thereof) due at time of payment computed at rates not less than those contained in the wage determination of the Secretary of Labor which is attached hereto and made a part hereof, regardless of any contractual relationship which may be alleged to exist between the contractor and such laborers and mechanics.

Contributions made or costs reasonably anticipated for bona fide fringe benefits under section 1(b)(2) of the Davis-Bacon Act on behalf of laborers or mechanics are considered wages paid to such laborers or mechanics, subject to the provisions of paragraph 1.d. of this section; also, regular contributions made or costs incurred for more than a weekly period (but not less often than quarterly) under plans, funds, or programs which cover the particular weekly period, are deemed to be constructively made or incurred during such weekly period. Such laborers and mechanics shall be paid the appropriate wage rate and fringe benefits on the wage determination for the classification of work actually performed, without regard to skill, except as provided in 29 CFR 5.5(a)(4). Laborers or mechanics performing work in more than one classification may be compensated at the rate specified for each classification for the time actually worked therein: Provided, That the employer's payroll records accurately set forth the time spent in each classification in which work is performed. The wage determination (including any additional classification and wage rates conformed under paragraph 1.b. of this section) and the Davis-Bacon poster (WH–1321) shall be posted at all times by the contractor and its subcontractors at the site of the work in a prominent and accessible place where it can be easily seen by the workers.

b. (1) The contracting officer shall require that any class of laborers or mechanics, including helpers, which is not listed in the wage determination and which is to be employed under the contract shall be classified in conformance with the wage determination. The contracting officer shall approve an additional classification and wage rate and fringe benefits therefore only when the following criteria have been met:

(i) The work to be performed by the classification requested is not performed by a classification in the wage determination; and

(ii) The classification is utilized in the area by the construction industry; and

(iii) The proposed wage rate, including any bona fide fringe benefits, bears a reasonable relationship to the wage rates contained in the wage determination.

(2) If the contractor and the laborers and mechanics to be employed in the classification (if known), or their representatives, and the contracting officer agree on the classification and wage rate (including the amount designated for fringe benefits where appropriate), a report of the action taken shall be sent by the contracting officer to the Administrator of the Wage and Hour Division, Employment Standards Administration, U.S. Department of Labor, Washington, DC 20210. The Administrator, or an authorized representative, will approve, modify, or disapprove every additional classification action within 30 days of receipt and so advise the contracting officer or will notify the contracting officer within the 30-day period that additional time is necessary.

(3) In the event the contractor, the laborers or mechanics to be employed in the classification or their representatives, and the contracting officer do not agree on the proposed classification and wage rate (including the amount designated for fringe benefits, where appropriate), the contracting officer shall refer the questions, including the views of all interested parties and the recommendation of the contracting officer, to the Wage and Hour Administrator for determination. The Wage and Hour Administrator, or an authorized representative, will issue a determination within 30 days of receipt and so advise

the contracting officer or will notify the contracting officer within the 30-day period that additional time is necessary.

(4) The wage rate (including fringe benefits where appropriate) determined pursuant to paragraphs 1.b.(2) or 1.b.(3) of this section, shall be paid to all workers performing work in the classification under this contract from the first day on which work is performed in the classification.

c. Whenever the minimum wage rate prescribed in the contract for a class of laborers or mechanics includes a fringe benefit which is not expressed as an hourly rate, the contractor shall either pay the benefit as stated in the wage determination or shall pay another bona fide fringe benefit or an hourly cash equivalent thereof.

d. If the contractor does not make payments to a trustee or other third person, the contractor may consider as part of the wages of any laborer or mechanic the amount of any costs reasonably anticipated in providing bona fide fringe benefits under a plan or program, Provided, That the Secretary of Labor has found, upon the written request of the contractor, that the applicable standards of the Davis-Bacon Act have been met. The Secretary of Labor may require the contractor to set aside in a separate account assets for the meeting of obligations under the plan or program.

2. Withholding

The contracting agency shall upon its own action or upon written request of an authorized representative of the Department of Labor, withhold or cause to be withheld from the contractor under this contract, or any other Federal contract with the same prime contractor, or any other federally-assisted contract subject to Davis-Bacon prevailing wage requirements, which is held by the same prime contractor, so much of the accrued payments or advances as may be considered necessary to pay laborers and mechanics, including apprentices, trainees, and helpers, employed by the contractor or any subcontractor the full amount of wages required by the contract. In the event of failure to pay any laborer or mechanic, including any apprentice, trainee, or helper, employed or working on the site of the work, all or part of the wages required by the contract, the contracting agency may, after written notice to the contractor, take such action as may be necessary to cause the suspension of any further payment, advance, or guarantee of funds until such violations have ceased.

3. Payrolls and basic records

a. Payrolls and basic records relating thereto shall be maintained by the contractor during the course of the work and preserved for a period of three years thereafter for all laborers and mechanics working at the site of the work. Such records shall contain the name, address, and social security number of each such worker, his or her correct classification, hourly rates of wages paid (including rates of contributions or costs anticipated for bona fide fringe benefits or cash equivalents thereof of the types described in section 1(b)(2)(B) of the Davis-Bacon Act), daily and weekly number of hours worked, deductions made and actual wages paid. Whenever the Secretary of Labor has found under 29 CFR 5.5(a)(1)(iv) that the wages of any laborer or mechanic include the amount of any costs reasonably anticipated in providing benefits under a plan or program described in section 1(b)(2)(B) of the Davis-Bacon Act, the contractor shall maintain records which show that the commitment to provide such benefits is enforceable, that the plan or program is financially responsible, and that the plan or program has been communicated in writing to the laborers or mechanics affected, and records which show the costs anticipated or the actual cost incurred in providing such benefits. Contractors employing apprentices or trainees under approved programs shall maintain written evidence of the registration of apprenticeship programs and certification of trainee programs, the registration of the apprentices and trainees, and the ratios and wage rates prescribed in the applicable programs.

b. (1) The contractor shall submit weekly for each week in which any contract work is performed a copy of all payrolls to the contracting agency. The payrolls submitted shall set out accurately and completely all of the information required to be maintained under 29 CFR 5.5(a)(3)(i), except that full social security numbers and home addresses shall not be included on weekly transmittals. Instead the payrolls shall only need to include an individually identifying number for each employee (e.g. , the last four digits of the employee's social security number). The required weekly payroll information may be submitted in any form desired. Optional Form WH–347 is available for this purpose from the Wage and Hour Division Web site at http://www.dol.gov/esa/whd/forms/wh347instr.htm or its successor site. The prime contractor is responsible for the submission of copies of payrolls by all subcontractors. Contractors and subcontractors shall maintain the full social security number and current address of each covered worker, and shall provide them upon request to the contracting agency for transmission to the State DOT, the FHWA or the Wage and Hour Division of the Department of Labor for purposes of an investigation or audit of compliance with prevailing wage requirements. It is not a violation of this section for a prime contractor to require a subcontractor to provide addresses and social security numbers to the prime contractor for its own records, without weekly submission to the contracting agency..

(2) Each payroll submitted shall be accompanied by a “Statement of Compliance,” signed by the contractor or subcontractor or his or her agent who pays or supervises the payment of the persons employed under the contract and shall certify the following:

(i) That the payroll for the payroll period contains the information required to be provided under §5.5 (a)(3)(ii) of Regulations, 29 CFR part 5, the appropriate information is being maintained under §5.5 (a)(3)(i) of Regulations, 29 CFR part 5, and that such information is correct and complete;

(ii) That each laborer or mechanic (including each helper, apprentice, and trainee) employed on the contract during the payroll period has been paid the full weekly wages earned, without rebate, either directly or indirectly, and that no deductions have been made either directly or indirectly from the full wages earned, other than permissible deductions as set forth in Regulations, 29 CFR part 3;

(iii) That each laborer or mechanic has been paid not less than the applicable wage rates and fringe benefits or cash equivalents for the classification of work performed, as specified in the applicable wage determination incorporated into the contract.

(3) The weekly submission of a properly executed certification set forth on the reverse side of Optional Form WH–347 shall satisfy the requirement for submission of the "Statement of Compliance" required by paragraph 3.b.(2) of this section.

(4) The falsification of any of the above certifications may subject the contractor or subcontractor to civil or criminal prosecution under section 1001 of title 18 and section 231 of title 31 of the United States Code.

c. The contractor or subcontractor shall make the records required under paragraph 3.a. of this section available for inspection, copying, or transcription by authorized representatives of the contracting agency, the State DOT, the FHWA, or the Department of Labor, and shall permit such representatives to interview employees during working hours on the job. If the contractor or subcontractor fails to submit the required records or to make them available, the FHWA may, after written notice to the contractor, the contracting agency or the State DOT, take such action as may be necessary to cause the suspension of any further payment, advance, or guarantee of funds. Furthermore, failure to submit the required records upon request or to make such records available may be grounds for debarment action pursuant to 29 CFR 5.12.

4. Apprentices and trainees

a. Apprentices (programs of the USDOL).

Apprentices will be permitted to work at less than the predetermined rate for the work they performed when they are employed pursuant to and individually registered in a bona fide apprenticeship program registered with the U.S. Department of Labor, Employment and Training Administration, Office of Apprenticeship Training, Employer and Labor Services, or with a State Apprenticeship Agency recognized by the Office, or if a person is employed in his or her first 90 days of probationary employment as an apprentice in such an apprenticeship program, who is not individually registered in the program, but who has been certified by the Office of Apprenticeship Training, Employer and Labor Services or a State Apprenticeship Agency (where appropriate) to be eligible for probationary employment as an apprentice.

The allowable ratio of apprentices to journeymen on the job site in any craft classification shall not be greater than the ratio permitted to the contractor as to the entire work force under the registered program. Any worker listed on a payroll at an apprentice wage rate, who is not registered or otherwise employed as stated above, shall be paid not less than the applicable wage rate on the wage determination for the classification of work actually performed. In addition, any apprentice performing work on the job site in excess of the ratio permitted under the registered program shall be paid not less than the applicable wage rate on the wage determination for the work actually performed. Where a contractor is performing construction on a project in a locality other than that in which its program is registered, the ratios and wage rates (expressed in percentages of the journeyman's hourly rate) specified in the contractor's or subcontractor's registered program shall be observed.

Every apprentice must be paid at not less than the rate specified in the registered program for the apprentice's level of progress, expressed as a percentage of the journeymen hourly rate specified in the applicable wage determination. Apprentices shall be paid fringe benefits in accordance with the provisions of the apprenticeship program. If the apprenticeship program does not specify fringe benefits, apprentices must be paid the full amount of fringe benefits listed on the wage determination for the applicable classification. If the Administrator determines that a different practice prevails for the applicable apprentice classification, fringes shall be paid in accordance with that determination.

In the event the Office of Apprenticeship Training, Employer and Labor Services, or a State Apprenticeship Agency recognized by the Office, withdraws approval of an apprenticeship program, the contractor will no longer be permitted to utilize apprentices at less than the applicable predetermined rate for the work performed until an acceptable program is approved.

b. Trainees (programs of the USDOL).

Except as provided in 29 CFR 5.16, trainees will not be permitted to work at less than the predetermined rate for the work performed unless they are employed pursuant to and individually registered in a program which has received prior approval, evidenced by formal certification by the U.S. Department of Labor, Employment and Training Administration.

The ratio of trainees to journeymen on the job site shall not be greater than permitted under the plan approved by the Employment and Training Administration.

Every trainee must be paid at not less than the rate specified in the approved program for the trainee's level of progress, expressed as a percentage of the journeyman hourly rate specified in the applicable wage determination. Trainees shall be paid fringe benefits in accordance with the provisions of the trainee program. If the trainee program does not mention fringe benefits, trainees shall be paid the full amount of fringe benefits listed on the wage determination unless the Administrator of the Wage and Hour Division determines that there is an apprenticeship program associated with the corresponding journeyman wage rate on the wage determination which provides for less than full fringe benefits for apprentices. Any employee listed on the payroll at a trainee rate who is not registered and participating in a training plan approved by the Employment and Training Administration shall be paid not less than the applicable wage rate on the wage determination for the classification of work actually performed. In addition, any trainee performing work on the job site in excess of the ratio permitted under the registered program shall be paid not less than the applicable wage rate on the wage determination for the work actually performed.

In the event the Employment and Training Administration withdraws approval of a training program, the contractor will no longer be permitted to utilize trainees at less than the applicable predetermined rate for the work performed until an acceptable program is approved.

c. Equal employment opportunity. The utilization of apprentices, trainees and journeymen under this part shall be in conformity with the equal employment opportunity requirements of Executive Order 11246, as amended, and 29 CFR part 30.

d. Apprentices and Trainees (programs of the U.S. DOT).

Apprentices and trainees working under apprenticeship and skill training programs which have been certified by the Secretary of Transportation as promoting EEO in connection with Federal-aid highway construction programs are not subject to the requirements of paragraph 4 of this Section IV. The straight time hourly wage rates for apprentices and trainees under such programs will be established by the particular programs. The ratio of apprentices and trainees to journeymen shall not be greater than permitted by the terms of the particular program.

5. Compliance with Copeland Act requirements. The contractor shall comply with the requirements of 29 CFR part 3, which are incorporated by reference in this contract.

6. Subcontracts. The contractor or subcontractor shall insert Form FHWA-1273 in any subcontracts and also require the subcontractors to include Form FHWA-1273 in any lower tier subcontracts. The prime contractor shall be responsible for the compliance by any subcontractor or lower tier subcontractor with all the contract clauses in 29 CFR 5.5.

7. Contract termination: debarment. A breach of the contract clauses in 29 CFR 5.5 may be grounds for termination of the contract, and for debarment as a contractor and a subcontractor as provided in 29 CFR 5.12.

8. Compliance with Davis-Bacon and Related Act requirements. All rulings and interpretations of the Davis-Bacon and Related Acts contained in 29 CFR parts 1, 3, and 5 are herein incorporated by reference in this contract.

9. Disputes concerning labor standards. Disputes arising out of the labor standards provisions of this contract shall not be subject to the general disputes clause of this contract. Such disputes shall be resolved in accordance with the procedures of the Department of Labor set forth in 29 CFR parts 5, 6, and 7. Disputes within the meaning of this clause include disputes between the contractor (or any of its subcontractors) and the contracting agency, the U.S. Department of Labor, or the employees or their representatives.

10. Certification of eligibility.

a. By entering into this contract, the contractor certifies that neither it (nor he or she) nor any person or firm who has an interest in the contractor's firm is a person or firm ineligible to be awarded Government contracts by virtue of section 3(a) of the Davis-Bacon Act or 29 CFR 5.12(a)(1).

b. No part of this contract shall be subcontracted to any person or firm ineligible for award of a Government contract by virtue of section 3(a) of the Davis-Bacon Act or 29 CFR 5.12(a)(1).

c. The penalty for making false statements is prescribed in the U.S. Criminal Code, 18 U.S.C. 1001.

V. CONTRACT WORK HOURS AND SAFETY STANDARDS ACT

The following clauses apply to any Federal-aid construction contract in an amount in excess of $100,000 and subject to the overtime provisions of the Contract Work Hours and Safety Standards Act. These clauses shall be inserted in addition to the clauses required by 29 CFR 5.5(a) or 29 CFR 4.6. As used in this paragraph, the terms laborers and mechanics include watchmen and guards.

1. Overtime requirements. No contractor or subcontractor contracting for any part of the contract work which may require or involve the employment of laborers or mechanics shall require or permit any such laborer or mechanic in any workweek in which he or she is employed on such work to work in excess of forty hours in such workweek unless such laborer or mechanic receives compensation at a rate not less than one and one-half times the basic rate of pay for all hours worked in excess of forty hours in such workweek.

2. Violation; liability for unpaid wages; liquidated damages. In the event of any violation of the clause set forth in paragraph (1.) of this section, the contractor and any subcontractor responsible therefor shall be liable for the unpaid wages. In addition, such contractor and subcontractor shall be liable to the United States (in the case of work done under contract for the District of Columbia or a territory, to such District or to such territory), for liquidated damages. Such liquidated damages shall be computed with respect to each individual laborer or mechanic, including watchmen and guards, employed in violation of the clause set forth in paragraph (1.) of this section, in the sum of $10 for each calendar day on which such individual was required or permitted to work in excess of the standard workweek of forty hours without payment of the overtime wages required by the clause set forth in paragraph (1.) of this section.

3. Withholding for unpaid wages and liquidated damages. The FHWA or the contacting agency shall upon its own action or upon written request of an authorized representative of the Department of Labor withhold or cause to be withheld, from any moneys payable on account of work performed by the contractor or subcontractor under any such contract or any other Federal contract with the same prime contractor, or any other federally-assisted contract subject to the Contract Work Hours and Safety Standards Act, which is held by the same prime contractor, such sums as may be determined to be necessary to satisfy any liabilities of such contractor or subcontractor for unpaid wages and liquidated damages as provided in the clause set forth in paragraph (2.) of this section.

4. Subcontracts. The contractor or subcontractor shall insert in any subcontracts the clauses set forth in paragraph (1.) through (4.) of this section and also a clause requiring the subcontractors to include these clauses in any lower tier subcontracts. The prime contractor shall be responsible for compliance by any subcontractor or lower tier subcontractor with the clauses set forth in paragraphs (1.) through (4.) of this section.

VI. SUBLETTING OR ASSIGNING THE CONTRACT

This provision is applicable to all Federal-aid construction contracts on the National Highway System.

1. The contractor shall perform with its own organization contract work amounting to not less than 30 percent (or a greater percentage if specified elsewhere in the contract) of the total original contract price, excluding any specialty items designated by the contracting agency. Specialty items may be performed by subcontract and the amount of any such specialty items performed may be deducted from the total original contract price before computing the amount of work required to be performed by the contractor's own organization (23 CFR 635.116).

a. The term “perform work with its own organization” refers to workers employed or leased by the prime contractor, and equipment owned or rented by the prime contractor, with or without operators. Such term does not include employees or equipment of a subcontractor or lower tier subcontractor, agents of the prime contractor, or any other assignees. The term may include payments for the costs of hiring leased employees from an employee leasing firm meeting all relevant Federal and State regulatory requirements. Leased employees may only be included in this term if the prime contractor meets all of the following conditions:

(1) the prime contractor maintains control over the supervision of the day-to-day activities of the leased employees;
(2) the prime contractor remains responsible for the quality of the work of the leased employees;
(3) the prime contractor retains all power to accept or exclude individual employees from work on the project; and
(4) the prime contractor remains ultimately responsible for the payment of predetermined minimum wages, the submission of payrolls, statements of compliance and all other Federal regulatory requirements.

b. "Specialty Items" shall be construed to be limited to work that requires highly specialized knowledge, abilities, or equipment not ordinarily available in the type of contracting organizations qualified and expected to bid or propose on the contract as a whole and in general are to be limited to minor components of the overall contract.

2. The contract amount upon which the requirements set forth in paragraph (1) of Section VI is computed includes the cost of material and manufactured products which are to be purchased or produced by the contractor under the contract provisions.

3. The contractor shall furnish (a) a competent superintendent or supervisor who is employed by the firm, has full authority to direct performance of the work in accordance with the contract requirements, and is in charge of all construction operations (regardless of who performs the work) and (b) such other of its own organizational resources (supervision, management, and engineering services) as the contracting officer determines is necessary to assure the performance of the contract.

4. No portion of the contract shall be sublet, assigned or otherwise disposed of except with the written consent of the contracting officer, or authorized representative, and such consent when given shall not be construed to relieve the contractor of any responsibility for the fulfillment of the contract. Written consent will be given only after the contracting agency has assured that each subcontract is evidenced in writing and that it contains all pertinent provisions and requirements of the prime contract.

5. The 30% self-performance requirement of paragraph (1) is not applicable to design-build contracts; however, contracting agencies may establish their own self-performance requirements.

VII. SAFETY: ACCIDENT PREVENTION

This provision is applicable to all Federal-aid construction contracts and to all related subcontracts.

1. In the performance of this contract the contractor shall comply with all applicable Federal, State, and local laws governing safety, health, and sanitation (23 CFR 635). The contractor shall provide all safeguards, safety devices and protective equipment and take any other needed actions as it determines, or as the contracting officer may determine, to be reasonably necessary to protect the life and health of employees on the job and the safety of the public and to protect property in connection with the performance of the work covered by the contract.

2. It is a condition of this contract, and shall be made a condition of each subcontract, which the contractor enters into pursuant to this contract, that the contractor and any subcontractor shall not permit any employee, in performance of the contract, to work in surroundings or under conditions which are unsanitary, hazardous or dangerous to his/her health or safety, as determined under construction safety and health standards (29 CFR 1926) promulgated by the Secretary of Labor, in accordance with Section 107 of the Contract Work Hours and Safety Standards Act (40 U.S.C. 3704).

3. Pursuant to 29 CFR 1926.3, it is a condition of this contract that the Secretary of Labor or authorized representative thereof, shall have right of entry to any site of contract performance to inspect or investigate the matter of compliance with the construction safety and health standards and to carry out the duties of the Secretary under Section 107 of the Contract Work Hours and Safety Standards Act (40 U.S.C.3704).

VIII. FALSE STATEMENTS CONCERNING HIGHWAY PROJECTS

This provision is applicable to all Federal-aid construction contracts and to all related subcontracts.

In order to assure high quality and durable construction in conformity with approved plans and specifications and a high degree of reliability on statements and representations made by engineers, contractors, suppliers, and workers on Federal-aid highway projects, it is essential that all persons concerned with the project perform their functions as carefully, thoroughly, and honestly as possible. Willful falsification, distortion, or misrepresentation with respect to any facts related to the project is a violation of Federal law. To prevent any misunderstanding regarding the seriousness of these and similar acts, Form FHWA-1022 shall be posted on each Federal-aid highway project (23 CFR 635) in one or more places where it is readily available to all persons concerned with the project:

18 U.S.C. 1020 reads as follows:

"Whoever, being an officer, agent, or employee of the United States, or of any State or Territory, or whoever, whether a person, association, firm, or corporation, knowingly makes any false statement, false representation, or false report as to the character, quality, quantity, or cost of the material used or to be used, or the quantity or quality of the work performed or to be performed, or the cost thereof in connection with the submission of plans, maps, specifications, contracts, or costs of construction on any highway or related project submitted for approval to the Secretary of Transportation; or

Whoever knowingly makes any false statement, false representation, false report or false claim with respect to the character, quality, quantity, or cost of any work performed or to be performed, or materials furnished or to be furnished, in connection with the construction of any highway or related project approved by the Secretary of Transportation; or

Whoever knowingly makes any false statement or false representation as to material fact in any statement, certificate, or report submitted pursuant to provisions of the Federal-aid Roads Act approved July 1, 1916, (39 Stat. 355), as amended and supplemented;

Shall be fined under this title or imprisoned not more than 5 years or both."

IX. IMPLEMENTATION OF CLEAN AIR ACT AND FEDERAL WATER POLLUTION CONTROL ACT

This provision is applicable to all Federal-aid construction contracts and to all related subcontracts.

By submission of this bid/proposal or the execution of this contract, or subcontract, as appropriate, the bidder, proposer, Federal-aid construction contractor, or subcontractor, as appropriate, will be deemed to have stipulated as follows:

1. That any person who is or will be utilized in the performance of this contract is not prohibited from receiving an award due to a violation of Section 508 of the Clean Water Act or Section 306 of the Clean Air Act.
2. That the contractor agrees to include or cause to be included the requirements of paragraph (1) of this Section X in every subcontract, and further agrees to take such action as the contracting agency may direct as a means of enforcing such requirements.

X. CERTIFICATION REGARDING DEBARMENT, SUSPENSION, INELIGIBILITY AND VOLUNTARY EXCLUSION

This provision is applicable to all Federal-aid construction contracts, design-build contracts, subcontracts, lower-tier subcontracts, purchase orders, lease agreements, consultant contracts or any other covered transaction requiring FHWA approval or that is estimated to cost $25,000 or more – as defined in 2 CFR Parts 180 and 1200.

1**. Instructions for Certification – First Tier Participants:**

a. By signing and submitting this proposal, the prospective first tier participant is providing the certification set out below.

b. The inability of a person to provide the certification set out below will not necessarily result in denial of participation in this covered transaction. The prospective first tier participant shall submit an explanation of why it cannot provide the certification set out below. The certification or explanation will be considered in connection with the department or agency's determination whether to enter into this transaction. However, failure of the prospective first tier participant to furnish a certification or an explanation shall disqualify such a person from participation in this transaction.

c. The certification in this clause is a material representation of fact upon which reliance was placed when the contracting agency determined to enter into this transaction. If it is later determined that the prospective participant knowingly rendered an erroneous certification, in addition to other remedies available to the Federal Government, the contracting agency may terminate this transaction for cause of default.

d. The prospective first tier participant shall provide immediate written notice to the contracting agency to whom this proposal is submitted if any time the prospective first tier participant learns that its certification was erroneous when submitted or has become erroneous by reason of changed circumstances.

e. The terms "covered transaction," "debarred," "suspended," "ineligible," "participant," "person," "principal," and "voluntarily excluded," as used in this clause, are defined in 2 CFR Parts 180 and 1200. “First Tier Covered Transactions” refers to any covered transaction between a grantee or subgrantee of Federal funds and a participant (such as the prime or general contract). “Lower Tier Covered Transactions” refers to any covered transaction under a First Tier Covered Transaction (such as subcontracts). “First Tier Participant” refers to the participant who has entered into a covered transaction with a grantee or subgrantee of Federal funds (such as the prime or general contractor). “Lower Tier Participant” refers any participant who has entered into a covered transaction with a First Tier Participant or other Lower Tier Participants (such as subcontractors and suppliers).

f. The prospective first tier participant agrees by submitting this proposal that, should the proposed covered transaction be entered into, it shall not knowingly enter into any lower tier covered transaction with a person who is debarred, suspended, declared ineligible, or voluntarily excluded from participation in this covered transaction, unless authorized by the department or agency entering into this transaction.

g. The prospective first tier participant further agrees by submitting this proposal that it will include the clause titled "Certification Regarding Debarment, Suspension, Ineligibility and Voluntary Exclusion-Lower Tier Covered Transactions," provided by the department or contracting agency, entering into this covered transaction, without modification, in all lower tier covered transactions and in all solicitations for lower tier covered transactions exceeding the $25,000 threshold.

h. A participant in a covered transaction may rely upon a certification of a prospective participant in a lower tier covered transaction that is not debarred, suspended, ineligible, or voluntarily excluded from the covered transaction, unless it knows that the certification is erroneous. A participant is responsible for ensuring that its principals are not suspended, debarred, or otherwise ineligible to participate in covered transactions. To verify the eligibility of its principals, as well as the eligibility of any lower tier prospective participants, each participant may, but is not required to, check the Excluded Parties List System website (https://www.epls.gov/), which is compiled by the General Services Administration.

i. Nothing contained in the foregoing shall be construed to require the establishment of a system of records in order to render in good faith the certification required by this clause. The knowledge and information of the prospective participant is not required to exceed that which is normally possessed by a prudent person in the ordinary course of business dealings.

j. Except for transactions authorized under paragraph (f) of these instructions, if a participant in a covered transaction knowingly enters into a lower tier covered transaction with a person who is suspended, debarred, ineligible, or voluntarily excluded from participation in this transaction, in addition to other remedies available to the Federal Government, the department or agency may terminate this transaction for cause or default.

* * * * *

2. Certification Regarding Debarment, Suspension, Ineligibility and Voluntary Exclusion – First Tier Participants:

a. The prospective first tier participant certifies to the best of its knowledge and belief, that it and its principals:

(1) Are not presently debarred, suspended, proposed for debarment, declared ineligible, or voluntarily excluded from participating in covered transactions by any Federal department or agency;

(2) Have not within a three-year period preceding this proposal been convicted of or had a civil judgment rendered against them for commission of fraud or a criminal offense in connection with obtaining, attempting to obtain, or performing a public (Federal, State or local) transaction or contract under a public transaction; violation of Federal or State antitrust statutes or commission of embezzlement, theft, forgery, bribery, falsification or destruction of records, making false statements, or receiving stolen property;

(3) Are not presently indicted for or otherwise criminally or civilly charged by a governmental entity (Federal, State or local) with commission of any of the offenses enumerated in paragraph (a)(2) of this certification; and

(4) Have not within a three-year period preceding this application/proposal had one or more public transactions (Federal, State or local) terminated for cause or default.

b. Where the prospective participant is unable to certify to any of the statements in this certification, such prospective participant shall attach an explanation to this proposal.

2. **Instructions for Certification - Lower Tier Participants:**

(Applicable to all subcontracts, purchase orders and other lower tier transactions requiring prior FHWA approval or estimated to cost $25,000 or more - 2 CFR Parts 180 and 1200)

a. By signing and submitting this proposal, the prospective lower tier is providing the certification set out below.

b. The certification in this clause is a material representation of fact upon which reliance was placed when this transaction was entered into. If it is later determined that the prospective lower tier participant knowingly rendered an erroneous certification, in addition to other remedies available to the Federal Government, the department, or agency with which this transaction originated may pursue available remedies, including suspension and/or debarment.

c. The prospective lower tier participant shall provide immediate written notice to the person to which this proposal is submitted if at any time the prospective lower tier participant learns that its certification was erroneous by reason of changed circumstances.

d. The terms "covered transaction," "debarred," "suspended," "ineligible," "participant," "person," "principal," and "voluntarily excluded," as used in this clause, are defined in 2 CFR Parts 180 and 1200. You may contact the person to which this proposal is submitted for assistance in obtaining a copy of those regulations. “First Tier Covered Transactions” refers to any covered transaction between a grantee or subgrantee of Federal funds and a participant (such as the prime or general contract). “Lower Tier Covered Transactions” refers to any covered transaction under a First Tier Covered Transaction (such as subcontracts). “First Tier Participant” refers to the participant who has entered into a covered transaction with a grantee or subgrantee of Federal funds (such as the prime or general contractor). “Lower Tier Participant” refers any participant who has entered into a covered transaction with a First Tier Participant or other Lower Tier Participants (such as subcontractors and suppliers).

e. The prospective lower tier participant agrees by submitting this proposal that, should the proposed covered transaction be entered into, it shall not knowingly enter into any lower tier covered transaction with a person who is debarred, suspended, declared ineligible, or voluntarily excluded from participation in this covered transaction, unless authorized by the department or agency with which this transaction originated.

f. The prospective lower tier participant further agrees by submitting this proposal that it will include this clause titled "Certification Regarding Debarment, Suspension, Ineligibility and Voluntary Exclusion-Lower Tier Covered Transaction," without modification, in all lower tier covered transactions and in all solicitations for lower tier covered transactions exceeding the $25,000 threshold.

g. A participant in a covered transaction may rely upon a certification of a prospective participant in a lower tier covered transaction that is not debarred, suspended, ineligible, or voluntarily excluded from the covered transaction, unless it knows that the certification is erroneous. A participant is responsible for ensuring that its principals are not suspended, debarred, or otherwise ineligible to participate in covered transactions. To verify the eligibility of its principals, as well as the eligibility of any lower tier prospective participants, each participant may, but is not required to, check the Excluded Parties List System website (https://www.epls.gov/), which is compiled by the General Services Administration.

h. Nothing contained in the foregoing shall be construed to require establishment of a system of records in order to render in good faith the certification required by this clause. The knowledge and information of participant is not required to exceed that which is normally possessed by a prudent person in the ordinary course of business dealings.

i. Except for transactions authorized under paragraph e of these instructions, if a participant in a covered transaction knowingly enters into a lower tier covered transaction with a person who is suspended, debarred, ineligible, or voluntarily excluded from participation in this transaction, in addition to other remedies available to the Federal Government, the

department or agency with which this transaction originated may pursue available remedies, including suspension and/or debarment.

* * * * *

Certification Regarding Debarment, Suspension, Ineligibility and Voluntary Exclusion--Lower Tier Participants:

1. The prospective lower tier participant certifies, by submission of this proposal, that neither it nor its principals is presently debarred, suspended, proposed for debarment, declared ineligible, or voluntarily excluded from participating in covered transactions by any Federal department or agency.

2. Where the prospective lower tier participant is unable to certify to any of the statements in this certification, such prospective participant shall attach an explanation to this proposal.

* * * * *

XI. CERTIFICATION REGARDING USE OF CONTRACT FUNDS FOR LOBBYING

This provision is applicable to all Federal-aid construction contracts and to all related subcontracts which exceed $100,000 (49 CFR 20).

1. The prospective participant certifies, by signing and submitting this bid or proposal, to the best of his or her knowledge and belief, that:

a. No Federal appropriated funds have been paid or will be paid, by or on behalf of the undersigned, to any person for influencing or attempting to influence an officer or employee of any Federal agency, a Member of Congress, an officer or employee of Congress, or an employee of a Member of Congress in connection with the awarding of any Federal contract, the making of any Federal grant, the making of any Federal loan, the entering into of any cooperative agreement, and the extension, continuation, renewal, amendment, or modification of any Federal contract, grant, loan, or cooperative agreement.

b. If any funds other than Federal appropriated funds have been paid or will be paid to any person for influencing or attempting to influence an officer or employee of any Federal agency, a Member of Congress, an officer or employee of Congress, or an employee of a Member of Congress in connection with this Federal contract, grant, loan, or cooperative agreement, the undersigned shall complete and submit Standard Form-LLL, "Disclosure Form to Report Lobbying," in accordance with its instructions.

2. This certification is a material representation of fact upon which reliance was placed when this transaction was made or entered into. Submission of this certification is a prerequisite for making or entering into this transaction imposed by 31 U.S.C. 1352. Any person who fails to file the required certification shall be subject to a civil penalty of not less than $10,000 and not more than $100,000 for each such failure.

3. The prospective participant also agrees by submitting its bid or proposal that the participant shall require that the language of this certification be included in all lower tier subcontracts, which exceed $100,000 and that all such recipients shall certify and disclose accordingly.

NOTICE OF REQUIREMENTS FOR AFFIRMATIVE ACTION TO ENSURE EQUAL EMPLOYMENT OPPORTUNITY (EXECUTIVE ORDER 11246)

1. The Offeror's or Bidder's attention is called to the "Equal Opportunity Clause" and the "Standard Federal Equal Employment Opportunity Construction Contract Specifications" set forth herein.

2. The goal for female participation, expressed in percentage terms for the Contractor's aggregate workforce in each trade on all construction work, is 6.9%.

Until further notice	Goals for minority participation for each trade (percent)
SHSA Cities:	
Pascagoula - Moss Point	16.9
Biloxi - Gulfport	19.2
Jackson	30.3
SMSA Counties:	
Desoto	32.3
Hancock, Harrison, Stone	19.2
Hinds, Rankin	30.3
Jackson	16.9
Non-SMSA Counties:	
George, Greene	26.4
Alcorn, Benton, Bolivar, Calhoun, Carroll, Chickasaw, Clay, Coahoma, Grenada, Itawamba, Lafayette, Lee, Leflore, Marshall, Monroe, Montgomery, Panola, Pontotoc, Prentiss, Quitman, Sunflower, Tallahatchie, Tate, Tippah, Tishomingo, Tunica, Union, Washington, Webster, Yalobusha	26.5
Attala, Choctaw, Claiborne, Clarke, Copiah, Covington, Franklin, Holmes, Humphreys, Issaquena, Jasper, Jefferson, Jefferson Davis, Jones Kemper, Lauderdale, Lawrence, Leake, Lincoln, Lowndes, Madison, Neshoba, Newton, Noxubee, Oktibbeha, Scott, Sharkey, Simpson, Smith, Warren, Wayne, Winston, Yazoo	32.0
Forrest, Lamar, Marion, Pearl River, Perry, Pike, Walthall	27.7
Adams, Amite, Wilkinson	30.4

These goals are applicable to all the Contractor's construction work (whether or not it is Federal or federally assisted) performed in the covered area. If the contractor performs construction work in a geographical area located outside of the covered area, it shall apply the goals established for such geographical area where the work is actually performed. With regard to this second area, the contractor also is subject to the goals for both its federally involved and nonfederally involved construction.

The Contractor's compliance with the Executive Order and the regulations in CFR Part 60-4 shall be based on its implementation of the Equal Opportunity clause, specific affirmative action obligations required by the specifications set forth in 41 CFR 60-4.3(a), and its efforts to meet the goals. The hours of minority and female employment and training must be substantially uniform throughout the length of the contract, and in each trade, and the Contractor shall make a good faith effort to employ minorities and women evenly on each of its projects. The transfer of minority or female employees or trainees from Contractor to Contractor or from project to project for the sole purpose of meeting the Contractor's goals shall be a violation of the contract, the Executive Order and the regulations in 41 CFR Part 60-4.2(d). Compliance with the goals will be measured against the total work hours performed.

3. The Contractor shall provide written notification to the Director of the Office of Federal Contract Compliance Programs within 10 working days of award of any construction subcontract in excess of $10,000 at any tier for construction work under the contract resulting from this solicitation. The notification shall list the name, address and telephone number of the subcontractor, employer identification number of the subcontractor, estimated dollar amount of the subcontract; estimated starting and completion dates of the subcontract; and the geographical area in which the subcontract is to be performed.

4. As used in this Notice, and in the contract resulting from this solicitation, the "covered area" is to the county and city (if any), stated in the advertisement.

5. The notification required in Paragraph 3 shall be addressed to the following:

Contract Compliance Officer
Mississippi Department of Transportation
P.O. Box 1850
Jackson, Mississippi 39215-1850

(06/28/2012)

MISSISSIPPI DEPARTMENT OF TRANSPORTATION

SPECIAL PROVISION NO. 907-101-4 **CODE: (IS)**

DATE: **11/05/2008**

SUBJECT: **Definitions**

Section 101, Definitions and Terms, of the 2004 Edition of the Mississippi Standard Specifications for Road and Bridge Construction is hereby amended as follows:

907-101.02--Definitions. Replace the following definitions in Subsection 101.02 on pages 3 through 13.

Contract - The written agreement between the Mississippi Transportation Commission and the Contractor setting forth the obligations of the parties thereunder, including but not limited to, the performance of the work, the furnishing of labor and materials, and the basis of payment.

The contract includes the invitation for bids, proposal, contract form and contract bonds, specifications, supplemental specifications, interim specifications, general and detailed plans, special provisions, notices to bidders, notice to proceed, and also any agreements that are required to complete the construction of the work in an acceptable manner, including authorized extensions thereof, all of which constitute one instrument.

Contract Bonds - The approved form of security, executed by the Contractor and the Contractor's Surety(ies), guaranteeing complete execution of the contract and all supplemental agreements pertaining thereto and the payment of all legal debts pertaining to the construction of the project. This term includes Performance and Payment Bond(s).

Surety - A corporate body, qualified under the laws of Mississippi, which is bound with and for the successful bidder by "contract bond(s)" to guarantee acceptable performance of the contract and payment of all legal taxes and debts pertaining to the construction of the project, including payment of State Sales Tax as prescribed by law, and any overpayment made to the Contractor.

Add the following to the list of definitions in Subsection 101.02 on pages 3 through 13.

Performance Bond - The approved form of security, executed by the Contractor and issued by the Contractor's Surety(ies), guaranteeing satisfactory completion of the contract and all supplemental agreements pertaining thereto.

Payment Bond - The approved form of security, executed by the Contractor and issued by the Contractor's Surety(ies), guaranteeing the payment of all legal debts pertaining to the construction of the project including, but not limited to, the labor and materials of subcontractors and suppliers to the prime contractor.

MISSISSIPPI DEPARTMENT OF TRANSPORTATION

SPECIAL PROVISION NO. 907-102-12 **CODE: (SP)**

DATE: 11/18/2015

SUBJECT: Bidding Requirements and Conditions

Section 102, Bidding Requirements and Conditions, of the 2004 Edition of the Mississippi Standard Specifications for Road and Bridge Construction is hereby amended as follows.

907-102.06--Preparation of Proposal. Delete Subsection 102.06 on pages 17 thru 19 and substitute the following.

907-102.06--Preparation of Proposal. MDOT will receive bids for construction projects online using the Bid Express Service (BIDX).

The Bidder's complete proposal (Certification of Performance, Certification Regarding Non-Collusion, etc.) will be submitted to MDOT electronically via the Bid Express Service no later than the day and at the time bids are to be received. Bidders will be responsible for joining Bid Express and getting all necessary clearances and a digital ID in sufficient time for Bid Express to submit their bid.

Bid Express files shall be downloaded from http://www.bidx.com. Bidders are to select Mississippi Department of Transportation under the U.S. AGENCY drop down menu and select the desired project. After completing all necessary data, the Bidders shall submit their bid to Bid Express in sufficient time for the bid to be properly sent to MDOT.

Bids submitted via the Bid Express Service will constitute the official bid and shall be digitally signed and delivered to the Department by the Bid Express Service.

It is the responsibility of every bidder to check for any addendum or modification to the contract document(s) for which they intend to submit a response. It shall be the bidder's responsibility to be sure they are in receipt of all addenda, pre-bid conference information, and/or questions and answers provided at, or subsequent to, the pre-bid conference, if any are issued.

The Mississippi Transportation Commission has no responsibility for defects, irregularities or other problems caused by the use of electronic media. Operation of this electronic media is done at the sole risk of the user.

When the bid schedule contains a fixed contract unit price (FCP) for an item, this price shall be the contract unit price for the item and no alteration shall be made by the bidder.

When an item in the proposal contains a choice to be made by the bidder, the bidder shall indicate the choice in accordance with the INSTRUCTION TO BIDDERS in Section 905 - Proposal; reference is made to Alternate Designs, Alternate Items, and Optional Items as defined in

Subsection 101.02.

Where the bid schedule lists alternate designs or alternate items, the one alternate bid shall be designated by bidding only that alternate, and thereafter no further choice will be permitted.

When the bid schedule lists optional items, the Contractor's selection may, but is not required to, be made at the time of bidding. For optional items not pre-selected, the Contractor's selection shall be made prior to or at the time of execution of the contract.

Each proposal issued will contain a Certification regarding debarment, suspension, and other responsibility matters to be completed by the bidder. The Certification must be sworn to and shall be under penalty of perjury and bidders are cautioned to read and understand its contents in entirety before digitally signing the bid.

The Contractor shall provide immediate written notice to the Contract Administration Engineer Division at any time, prior to or after award, that it is known a certification was erroneous when executed or has become erroneous by reason of changed circumstances.

The bidder's proposal must be digitally signed by the individual, by one or more members of the partnership, by one or more members or officers of each firm representing a joint venture, or by one or more officers of a corporation; or by an agent of the Contractor legally qualified to bind the Contractor and acceptable to the State. If the proposal is made by an individual, the individual's name and address must be shown; by a partnership, the name and address of each partnership member must be shown; as a joint venture, the name and address of each member or officer of the firms represented by the joint venture must be shown; by a corporation, the name of the corporation and the business address of its corporate officials must be shown.

The address stated on the proposal shall be the bidder's permanent address until changed by written notice to the Executive Director. All notices provided for in the contract shall be considered as delivered to the Contractor when mailed or delivered to such address.

907-102.08--Proposal Guaranty. Delete the first and second paragraphs in Subsection 102.08 on page 20 and substitute the following.

No proposal will be considered unless accompanied by certified check, cashier's check or bid bond, made payable to the State of Mississippi, in an amount of not less than five percent (5%) of the total amount of the proposal offered. The guaranty shall be evidence of good faith that, if awarded the contract, the bidder will execute the contract and give performance and payment contract bond(s) as stipulated in Subsection 907-103.05.1, 907-103.05.2, and as required by law.

If a bid bond is offered as guaranty, the bond must be made by a Surety acceptable to the Executive Director and signed or countersigned by a Mississippi Agent or Qualified Nonresident Agent and the Bidder. Such bid bond shall also conform to the requirements and conditions stipulated in Subsection 907-103.05.2 as applicable.

907-102.09--Delivery of Proposals. Delete the paragraph under Subsection 102.09 on page 20,

and substitute the following.

Unless otherwise specified, each proposal shall be submitted online using the Bid Express service. Proposal Forms are non-transferable and no name or names of interested parties may be shown other than those to whom the proposal was issued. All proposals shall be submitted to Bid Express prior to the time and place specified in the Notice to Contractors and on the Bid Express website.

907-102.10--Withdrawal or Revision of Proposals. Delete the paragraph under Subsection 102.10 on page 20, and substitute the following.

A bidder may withdraw or revise a proposal after it has been submitted to Bid Express any time prior to the time set for opening proposals.

MISSISSIPPI DEPARTMENT OF TRANSPORTATION

SPECIAL PROVISION NO. 907-103-11 **CODE: (SP)**

DATE: 07/22/2015

SUBJECT: Award and Execution of Contract

Section 103, Award and Execution of Contract, of the 2004 Edition of the Mississippi Standard Specifications for Road and Bridge Construction is hereby amended as follows:

907-103.04--Return of Proposal Guaranty. Delete the second paragraph of Subsection 103.04 on page 23 and substitute the following:

Certified checks or cashier's checks submitted as proposal guaranties, except those of the two lowest bidders, will be returned within 10 days of contract award. The retained proposal guaranty of the unsuccessful of the two lowest bidders will be returned within ten days following the execution of a contract with the successful low bidder. The retained proposal guaranty of the successful bidder will be returned after satisfactory performance and payment bonds have been furnished and the contract has been executed.

In the event all bids are rejected by the Commission, certified checks or cashier's checks submitted as proposal guaranty by all bidders will be returned within 10 days of rejection.

Delete Subsection 103.05 on page 23 and substitute the following:

907-103.05--Contract Bonds.

907-103.05.1--Requirement of Contract Bonds. Prior to the execution of the contract, the successful bidder shall execute and deliver to the Executive Director a performance and payment bond(s), in a sum equal to the full amount of the contract as a guaranty for complete and full performance of the contract and the protection of the claimants and the Department for materials and equipment and full payment of wages in accordance with Section 65-1-85 Miss. Code Ann. (1972 as amended). In the event of award of a joint bid, each individual, partnership, firm or corporation shall assume jointly the full obligations under the contract and the contract bond(s).

907-103.05.2--Form of Bonds. The form of bond(s) shall be that provided by or acceptable to the Department. These bonds shall be executed by a Mississippi agent or qualified nonresident agent and shall be accompanied by a certification as to authorization of the attorney-in-fact to commit the Surety company. A power of attorney exhibiting the Surety's original seal supporting the Mississippi agent or the qualified nonresident agent's signature shall be furnished with each bond. The Surety company shall be currently authorized and licensed in good standing to conduct business in the State of Mississippi with a minimum rating by A.M. Best of (A-) in the latest printing "Best's Key Rating Guide" to write individual bonds up to ten percent of the policy holders' surplus or listed on the current list of “Companies Holding Certificates of Authority as Acceptable Sureties on Federal Bonds and as Acceptable Reinsuring Companies” as

published by the United States Department of the Treasury, Financial Management Service, Circular 570 (latest revision as published and supplemented on the Financial Management Service Web site and in the Federal Register) within the underwriting limits listed for that Surety. The Mississippi agent or qualified nonresident agent shall be in good standing and currently licensed by the Insurance Commissioner of the State of Mississippi to represent the Surety company(ies) executing the bonds.

Surety bonds shall continue to be acceptable to the Commission throughout the life of the Contract and shall not be canceled by the Surety without the consent of the Department. In the event the Surety fails or becomes financially insolvent, the Contractor shall file a new Bond in the amount designated by the Executive Director within thirty (30) days of such failure, insolvency, or bankruptcy. Subsequent to award of Contract, the Commission or the Department may require additional security for any supplemental agreements executed under the contract or replacement security in the event of the surety(ies) loss of the ratings required above. Suits concerning bonds shall be filed in the State of Mississippi and adjudicated under its laws without reference to conflict of laws principles.

907-103.08--Failure to Execute Contract.. In the first sentence of Subsection 103.08 on page 24, change "bond" to "performance and payment bonds".

MISSISSIPPI DEPARTMENT OF TRANSPORTATION

SPECIAL PROVISION NO. 907-104-5 **CODE: (IS)**

DATE: **05/01/2013**

SUBJECT: **Scope of Work**

Section 104, Scope of Work, of the 2004 Edition of the Mississippi Standard Specifications for Road and Bridge Construction is hereby amended as follows:

907-104.05--Removal and Disposal of All Materials From the Project. Delete the second sentence of the first full paragraph of Subsection 104.05 on page 30 and substitute the following:

The Contractor shall also furnish the Engineer a certified letter stating that the area of disposal is not in a wetland or in Waters of the U.S.

MISSISSIPPI DEPARTMENT OF TRANSPORTATION

SPECIAL PROVISION NO. 907-104-6 **CODE: (SP)**

DATE: **11/20/2014**

SUBJECT: **Partnering Process**

Section 104, Scope of Work, of the 2004 Edition of the Mississippi Standard Specifications for Road and Bridge Construction is hereby amended as follows:

907-104.01--Intent of Contract. At the end of Subsection 104.01 on Page 24, add the following:

907-104.01.1--Partnering Process.

COVENANT OF GOOD FAITH AND FAIR DEALING:

This contract imposes an obligation of good faith and fair dealing in its performance and enforcement.

The Contractor and the Department, with a positive commitment to honesty and integrity, agree to the following mutual duties:

A. Each will function within the laws and statutes applicable to their duties and responsibilities.

B. Each will assist in the other's performance.

C. Each will avoid hindering the other's performance.

D. Each will proceed to fulfill its obligations diligently.

E. Each will cooperate in the common endeavor of the contract.

The Mississippi Department of Transportation intends to encourage the foundation of a cohesive partnership with the contractor and its principal subcontractors and supplier. This partnership will be structured to draw on the strengths of each organization to identify and achieve reciprocal goals. The objectives are effective and efficient contract performance and completion within budget, on schedule, and in accordance with plans and specifications.

FORMAL PARTNERING:

This partnership will be bilateral in make-up, and participation will be required by both MDOT and the Contractor. Any cost associated with effectuating this partnering will be agreed to by both parties and will be shared equally.

To implement this partnering initiative prior to starting of work in accordance with the requirements of Subsection 108.02 Notice to Proceed and prior to the preconstruction conference, the contractor's management personnel and MDOT's District Engineer, will initiate a partnering development seminar/team building workshop. The Contractor working with the assistance of the District and the State Construction Engineer will make arrangements to determine attendees for the workshop, agenda of the workshop, duration, and location. Persons required to be in attendance will be the MDOT key project personnel, the contractor's on-site project manager and key project supervision personnel of both the prime and principal subcontractors and suppliers. The project design engineers, FHWA and key local government personnel will be also be invited to attend as necessary. The contractors and MDOT will also be required to have Regional/District and Corporate/State level managers on the project team.

Follow-up workshops may be held periodically throughout the duration of the contract as agreed by the contractor and Mississippi Department of Transportation.

The establishment of a partnership charter on a project will not change the legal relationship of the parties to the contract nor relieve either party from any of the terms of the contract.

INFORMAL PARTNERING:

If the Contractor and MDOT does not choose to have a Formal Partnering process or the contract does not require a Mandatory Formal Partnering process, an informal partnering meeting shall be conducted on at least a monthly basis. It will be mandatory that the Project Engineer and Project Superintendent attend the meeting. It is recommended that MDOT Inspectors, foremen, and other project managers attend the meeting.

The Project Engineer will be responsible for taking minute of the meeting. As soon as practical after the meeting, the Engineer will send a copy of the minutes of the meeting to the Contractor, District Construction Engineer, and State Construction Engineer. The Contractor will have 30 days to dispute the contents of the minutes or they will become an official record of the project.

MISSISSIPPI DEPARTMENT OF TRANSPORTATION

SPECIAL PROVISION NO. 907-105-9 **CODE: (SP)**

DATE: **06/21/2016**

SUBJECT: **Control of Work**

Section 105, Control of Work, of the 2004 Edition of the Mississippi Standard Specifications for Road and Bridge Construction is modified as follows.

907-105.04--Coordination of Plans, Specifications, Interim Specifications, Special Provisions and Notice to Bidders. Delete the second full paragraph of Subsection 105.04 on page 35, and substitute the following.

In case of a conflict between plan quantities, advertisement quantities, and/or bid sheet quantities, the bid sheet quantities shall prevail.

907-105.05--Cooperation by Contractor. Delete Subsection 105.05 on page 35 and substitute the following.

907-105.05--Cooperation by Contractor. The Contractor shall give the work the attention necessary to expedite its progress, and shall cooperate with the Engineer, inspectors and other Contractors in every possible way.

907-105.05.1--Project Superintendent. The Contractor shall have a competent and experienced full time resident superintendent who is capable of reading and understanding the plans and specifications for the particular work being performed. The superintendent shall be on the project site at any time work is being performed by the Prime Contractor or any Subcontractors. The superintendent shall advise the Project Engineer of an intended absence from the work and designate a person to be in charge of the work during such absence. The superintendent shall receive instructions from the Engineer or authorized representative. Upon issuance of the Notice to Award, the Contractor or duly appointed agent authorized to bind the Contractor shall file with the Executive Director the name and address of the superintendent who will supervise the work with copies to the Construction Engineer, Contract Administration Engineer, District Engineer and Project Engineer. The Executive Director shall be immediately notified in writing with copies to those stated when a change is made in the Contractor's superintendent or superintendent's address. The superintendent shall have full authority to execute orders or directives of the Engineer without delay and to promptly supply materials, equipment, labor and incidentals as may be required. Such superintendence shall be furnished irrespective of the amount of work sublet.

907-105.05.2--Certified Erosion Control Person (CECP). On projects that require an erosion control plan, the Contractor shall also designate a responsible person whose primary duty shall be to monitor and maintain the effectiveness of the erosion control plan, including NPDES permit requirements. This responsible person must be a Certified Erosion Control Person

certified by an organization approved by the Department. Prior to or at the pre-construction conference, the Contractor shall designate in writing the Certified Erosion Control Person to the Project Engineer. The designated CECP shall be assigned to only one (1) project. When special conditions exist, such as two (2) adjoining projects or two (2) projects in close proximity, the Contractor may request in writing that the State Construction Engineer approve the use of one (1) CECP for both projects. The Contractor may request in writing that the Engineer authorize a substitute CECP to act in the absence of the CECP. The substitute CECP must also be certified by an organization approved by the Department. A copy of the CECP's certification must be included in the Contractor's Protection Plan as outlined in Subsection 907-107.22.1. This in no way modifies the requirements regarding the assignment and availability of the superintendent.

907-105.05.2.1--Responsibilities and Duties of the Certified Erosion Control Person. The CECP shall be responsible for the following:

1. Attending pre-construction conferences and each Erosion Control Inspection conducted by the Department.
2. In accordance with the requirements of Subsection 907-107.22.1, ensuring all required documentation, such as, but not limited to, the SWPPP, ECP are:
    - on the project site at all times,
    - updated on a daily basis, and
    - contain all revisions, additions, and modifications.
3. In accordance with Subsection 907-107.22.1, ensuring the "19-acre" rule is being adhered to, if applicable.
4. Ensuring the project has a rain gauge and maintain records of rainfall events on the Contractor's Erosion Control Inspection reports.
5. Ensuring the buffer zones around all stream-banks and wetland areas in which no construction activities are to take place are marked/flagged/roped off prior to any land disturbing activity.
6. Ensuring perimeter erosion/sedimentation control devices (BMPs) are in place prior to any land disturbing activity.
7. Reviewing and verifying the proper installation, maintenance, and effectiveness of the BMPs.
8. Notifying the Project Engineer within 24 hours of learning that sediment has been deposited off Department ROW or into a wetland or waters of the U.S.
9. Notifying the MDEQ within 24 hours of learning that sediment has been deposited into a wetland or waters of the U.S., copying the Project Engineer on the correspondence.
10. Performing the Contractor's Erosion Control Inspections of the project on the form provided for the purpose ensuring compliance with MDEQ's Storm Water Construction General Permit. Contractor Inspections shall be performed:
    - at least weekly, and
    - within 24 hours or on the business day prior to any forecasted rain event of 60% or greater, and
    - within 24 hours or on the next business day after a rainfall event of 0.5" or greater.

    The Contractor's Erosion Control Inspections shall commence with the installation of the perimeter BMPs and continue until a Partial Maintenance Release has been issued. Within 24 hours of completing each Contractor Erosion Control Inspection, the CECP shall

provide the Project Engineer with a copy of the report documenting the findings of each Contractor Erosion Control Inspection. The CECP will discuss the findings with the Contractor's Superintendent, if the CECP and the superintendent aren't the same person, and the Project Engineer or his representative. Failure to submit the completed and signed inspection forms may result in the withholding of the monthly estimate.

907-105.05.2.2--Deficient Performance of the Certified Erosion Control Person. In the event that the Contractor's CECP is not meeting the requirements set forth above, the Project Engineer will notify the Contractor in writing, describing the CECP's deficient performance. If the deficient performance should continue, the Department may take any or all actions listed below:

1. stop all non-erosion control work,
2. require the Contractor to designate a new CECP with the responsibilities and authority listed in Subsection 907-105.05.2.1,
3. revise the SWPPP and ECP with the newly designated CECP's certification information, and

In the event that a CECP is removed from serving as a CECP on a project, this person shall not be accepted as a Contractor's CECP on MDOT projects for at least one year from the time of removal.

907-105.14--Maintenance During Construction. Before the first sentence Subsection 105.14 on page 39, add the following.

The Contractor will be responsible for the maintenance of existing roadways within the limits of this project starting on the date of the Notice to Proceed / Beginning of Contract Time. Anytime work is performed in a travel lane, the Contractor shall install portable lane closure signs meeting the requirement of the MDOT Standard Drawing or MUTCD.

907-105.16--Acceptance. Delete Subsection 105.16 on pages 40 and 41, and substitute the following.

907-105.16--Acceptance.

907-105.16.1--Partial Acceptance of a Unit. When the Contractor has completed a unit of the work such as an interchange, a structure, a portion of the road or pavement or one project of a multi-project contract, the Contractor may request the Engineer to make a final inspection of that unit; or the Executive Director may order a final inspection of the unit if it is in the public's interest. If the Engineer finds upon inspection that the unit has been completed in compliance with the contract and it is a complete facility which can be made available to the public or made available for the prosecution of work under another contract, the Executive Director may conditionally accept the unit and conditionally relieve the Contractor of certain contractual responsibilities as defined in the release.

In the event items of work covered by such release are found to be defective or deficient as evidenced by unsatisfactory test reports of materials incorporated in the work or other engineering determination, the release shall terminate upon written notification to the Contractor. The Contractor shall make all corrections, restorations, constructions or reconstructions deemed

necessary and shall resume all contractual responsibilities until all corrective measures have been made in accordance with the terms of the contract.

Partial acceptance does not constitute final acceptance of the work, or any part thereof, nor in any way void or alter any of the terms of the contract.

Relief from "certain contractual responsibilities" as indicated herein may, or may not, include:

(a) Further maintenance of the defined limits of the partially accepted work.
(b) Further public liability for the defined limits of the partially accepted work.
(c) Further liability for liquidated damages as applicable to the value of the partially accepted work when the quantities for the partially accepted work are separate quantities listed on the Summary of Quantities sheet of the plans, and the separate quantities and the total amounts thereof are listed on the Engineer's Estimate. Otherwise, no reduction in liquidated damages will be made because of such partial acceptance.

    Unless specifically provided in the contract, the liability for liquidated damages shall not be reduced to less than that applicable under the contract for an amount of such work equal to at least fifty percent (50%) of the total amount of work under the contract.

907-105.16.2--Partial Maintenance Release of a Project. Upon written notice from the Contractor of presumptive completion of all the work and upon due notice from the Resident or Project Engineer, the Engineer will make an inspection.

If the inspection discloses any work as being unsatisfactory or incomplete, the Engineer will discuss in detail with the Contractor all discrepancies in the work. Upon correction of the work, another inspection will be made which shall constitute the final inspection provided the work has been satisfactorily completed.

However, if during the final inspection the Engineer determines that all work has been satisfactorily completed save that of growth and coverage of plant establishment on all or part of the work, the Engineer may recommend partial release of all work except items related to growth and coverage. Upon such recommendation, the Contractor will be given a partial release of maintenance and shall be released from further contractual liabilities for the completed work. The Contractor will retain responsibility for plant establishment and all maintenance and repairs appurtenant thereto until satisfactory growth and coverage is achieved.

907-105.16.3--Final Maintenance Release of a Project. Upon written notice from the Contractor of presumptive completion of all the work and upon due notice from the Resident or Project Engineer, the Engineer will make an inspection. If all work provided by the contract has been completed to the Engineer's satisfaction, the inspection will constitute the final inspection, and the Engineer will conditionally release the Contractor of maintenance.

As provided in the contract, in the event items of work are found to be deficient or defective as evidenced by unsatisfactory test reports of material incorporated into the work, the Contractor shall assume full responsibility for corrective measures, and shall reassume maintenance and public liability until such corrective measures are completed to the satisfaction of the Engineer.

907-105.16.4.--Final Acceptance of a Project. Upon evidence that the Contractor has fulfilled all obligations under the contract, the Executive Director will make final acceptance and notify the Contractor in writing. Final acceptance of the project will not be given until all obligations imposed under the contract, including but not limited to the final reporting of payrolls, final reporting of DBE payments, acceptable certifications and test reports of materials used, etc., have been fulfilled.

MISSISSIPPI DEPARTMENT OF TRANSPORTATION

EROSION AND SEDIMENT CONTROL FIELD INSPECTION REPORT

A.

PROJECT #: _____ INSPECTION DATE: _____

COUNTY: _____ DATE OF LAST PRECIPITATION: _____

CONTRACTOR: _____ AMOUNT OF PRECIPITATION SINCE LAST INSPECTION: _____

CECP'S NAME: _____ EROSION CONTROL SUB: _____

ACCOMPANIED BY MDOT STAFF? ☐ YES ☐ NO IF YES, NAME(S): _____

INSPECTION TYPE: ☐ WEEKLY ☐ PRE-RAIN EVENT ☐ POST-RAIN EVENT (required after ½" or more of rain)

B.

	Yes	No	NA
HAVE ALL CORRECTIVE ACTIONS NECESSARY FROM PREVIOUS INSPECTION BEEN SATISFACTORILY TAKEN CARE OF?			
IS THE ECP ON-SITE?			
DOES THE ECP ACCURATELY REFLECT ALL THE CURRENT BMP'S?			
ARE ALL THE INSPECTIONS REPORTS COMPLETE AND ON-SITE?			
ARE THE CONTRACTOR'S OPERATIONS IN SEQUENCE WITH THE APPROVED ECP?			
ARE STOCKPILES PROPERLY MANAGED?			
ARE ROADWAYS CLEAR OF SEDIMENT?			
ARE STABILIZED CONSTRUCTION ENTRANCES IN PLACE PER THE ECP?			
HAVE MDEQ AND THE PE BEEN GIVEN PROPER NOTIFICATION OF ANY "UPSET" CONDITIONS SINCE THE PREVIOUS INSPECTION?			
HAS SEDIMENT BEEN DEPOSITED OUTSIDE THE ROW? IF YES, GIVE DETAILS IN THE COMMENTS SECTION ASSOCIATED WITH THE BMP WHICH FAILED.			
HAS SEDIMENT BEEN DEPOSITED INTO "WATERS OF THE US"? IF YES, GIVE DETAILS IN THE COMMENTS SECTION ASSOCIATED WITH THE BMP WHICH FAILED.			

COMMENTS
_____

C. EROSION AND SEDIMENT CONTROL BMP's INSPECTED

EXCEPT FOR THE INSTANCES LISTED BELOW, ALL EROSION AND SEDIMENT CONTROL BMP's HAVE BEEN INSPECTED AND FOUND TO BE IN WORKING ORDER AND DO NOT REQUIRE MAINTENANCE OR CORRECTIVE ACTIONS.

BMP TYPE (see table)	APPROX STATION		L or R of CENTER-LINE	CONDITION*	SEDIMENT DEPOSITED**	COMMENTS OF CORRECTIVE ACTION
	FROM	TO				

* **A** = ADDITIONAL BMP NEEDED, **I** = INCORRECT INSTALLATION OF EXISTING BMP, **M** = BMP MAINTENANCE NEEDED, **F** = BMP FAILURE

** **ROW** = OFF RIGHT OF WAY, **WOS** = INTO WATERS OF THE STATE

D. INSPECTION CERTIFICATION

I CERTIFY THAT THIS DOCUMENT IS A TRUE AND ACCURATE REPRESENTATION OF THE CONDITIONS REFLECTED ON THIS PROJECT AT THE TIME OF THE INSPECTION.

_____ CECP

_____ Date

E. I certify that the findings listed in this report have been discussed with me.

_____ Contractor's Superintendent

_____ Date

BMP TYPE TABLE			
NUMBER	**BMP**	**NUMBER**	**BMP**
1	Above Ground Storage Tank (AST)	27	Sanitary Facilities
2	Brush Barrier	28	Sediment Retention Barrier
3	Chemical Flocculation (PAM)	29	Silt Bags (Dewatering Bags)
4	Chemical Soil Stabilization (Pam or Polyacrylamide)	30	Silt Fence
5	Chemical Storage	31	Slope Erosion (Rill & Gully)
6	Clearwater Diversion Channel	32	Slope Surface Roughening (Slope Tracking)
7	Concrete Washouts	33	Solid Waste (Trash)
8	Construction Debris	34	Spill Detection
9	--	35	Stabilized Construction Entrance/Exit
10	Detention Pond	36	Stockpile Protection
11	Ditch Liner	37	Straw Bale Checks
12	Ditchline Erosion	38	Stream Bank Erosion
13	Dust Control	39	Super Silt Fence
14	Erosion Control Blanket (ECB)	40	Temporary Earthen Berm
15	Filter Stone Rock Check (Filter Stone Check Dam)	41	Temporary Mulch (Straw Mulch, etc.)
16	Illicit Discharge	42	Temporary Sediment Basin (Silt Basin)
17	Inlet Protection	43	Temporary Sediment Trap
18	--	44	Temporary Stream Crossing
19	Outlet Protection (Energy Dissipater)	45	Temporary Stream Diversion Channel (Box Culverts)
20	Paved Ditching	46	Temporary Vegetation
21	Permanent Sediment Basin	47	Topsoiling
22	Permanent Vegetation	48	Triangular Silt Dike
23	Retention Pond	49	Turbidity Barrier
24	Rip-Rap Armoring	50	Turf Reinforcement Mat (TRM)
25	Rock Bags (Sand Bags)	51	Vegatative Buffer Zone
26	Rock Check (Check Dam)	52	Vegetated Filter Strip (Sod)
		53	Wattles

Instructions:

1. Fill out the form
2. Use the numbers in the BMP TYPE table to identify the applicable BMP in each row of the Table in C.

MISSISSIPPI DEPARTMENT OF TRANSPORTATION

SUPPLEMENT TO SPECIAL PROVISION NO. 907-107-13

DATE: 11/17/2015

SUBJECT: Permits, Licenses and Taxes

After the second paragraph of Subsection 907-107.02 on page 1, add the following.

Prior to commencing work on any Project, the Contractor shall obtain a Material Purchase Certificate number (MPC#) from the Mississippi Department of Revenue, pursuant to Miss. Code Ann. § 27-65-21, and Miss. Admin. Code 35.IV.10.01. Upon receipt of the MPC#, the Contractor must immediately provide the MPC# to the Contract Administration Division of the Department. Failure to obtain and submit a MPC# prior to commencing work shall result in the withholding of payment to the Contractor until such time that a MPC# is obtained and submitted to the Department.

Delete the last sentence of the last paragraph of Subsection 907-107.02 on page 1, and substitute the following.

The Department will notify the Mississippi Department of Revenue of the names and addresses of any Contractors or Subcontractors.

MISSISSIPPI DEPARTMENT OF TRANSPORTATION

SPECIAL PROVISION NO. 907-107-13 **CODE: (IS)**

DATE: **05/01/2013**

SUBJECT: **Legal Relations and Responsibility to Public**

Section 107, Legal Relations and Responsibility to Public, of the 2004 Edition of the Mississippi Standard Specifications for Road and Bridge Construction is hereby amended as follows.

907-107.02--Permits, Licenses and Taxes. Delete in toto Subsection 107.02 on page 49 and substitute the following.

The Contractor or any Subcontractor shall have the duty to determine any and all permits and licenses required and to procure all permits and licenses, pay all charges, fees and taxes and issue all notices necessary and incidental to the due and lawful prosecution of the work. At any time during the life of this contract, the Department may audit the Contractor's or Subcontractor's compliance with the requirements of this section.

The Contractor or any Subcontractor is advised that the "Mississippi Special Fuel Tax Law", Section 27-55-501, et seq. and the Mississippi Use Tax Law, Section 27-67-1, et seq., and their requirements and penalties, apply to any contract or subcontract for construction, reconstruction, maintenance or repairs, for contracts or subcontracts entered into with the State of Mississippi, any political subdivision of the State of Mississippi, or any Department, Agency, Institute of the State of Mississippi or any political subdivision thereof.

The Contractor or any Subcontractor will be subject to one or more audits by the Department during the life of this contract to make certain that all applicable fuel taxes, as outlined in Section 27-55-501, et seq., and any sales and/or use taxes, as outlined in Section 27-67-1, et seq. are being paid in compliance with the law. The Department will notify the Mississippi State Tax Commission of the names and addresses of any Contractors or Subcontractors.

907-107.14--Damage Claims and Insurance.

907-107.14.2--Liability Insurance. Delete Subsection 107.14.2 beginning on page 60 and substitute the following.

907-107.14.2.1--General. The Contractor shall carry Contractor's liability, including subcontractors and contractual, with limits not less than: $500,000 each occurrence; $1,000,000 aggregate; automobile liability - $500,000 combined single limit - each accident; Workers' Compensation and Employers' Liability - Statutory & $100,000 each accident; $100,000 each employee; $500,000 policy limit. Each policy shall be signed or countersigned by a Mississippi Agent or Qualified Nonresident Agent of the Insurance Company.

The Contractor shall have certificates furnished to the Department from the insurance companies providing the required coverage. The certificates shall be on the form furnished by the Department and will show the types and limits of coverage.

907-107.14.2.2--Railroad Protective. The following provisions are applicable to all work performed under a contract on, over or under the rights-of-way of each railroad shown on the plans.

The Contractor shall assume all liability for any and all damages to work, employees, servants, equipment and materials caused by railroad traffic.

Prior to starting any work on railroad property, the Contractor shall furnish satisfactory evidence to the Department that insurance of the forms and amounts set out herein in paragraphs (a) and (b) has been obtained. Also, the Contractor shall furnish similar evidence to the Railroad Company that insurance has been obtained in accordance with the Standard Provisions for General Liability Policies and the Railroad Protective Liability Form as published in the Code of Federal Regulations, 23 CFR 646, Subpart A. Evidence to the Railroad Company shall be in the form of a Certificate of Insurance for coverages required in paragraph (b), and the original policy of the Railroad Protective Liability Insurance for coverage required in paragraph (a).

All insurance herein specified shall be carried until the contract is satisfactorily complete as evidenced by a release of maintenance from the Department.

The Railroad Company shall be given at least 30 days notice prior to cancellation of the Railroad Protective Liability Insurance policy.

For work within the limits set out in Subsection 107.18 and this subsection, the Contractor shall provide insurance for bodily injury liability, property damage liability and physical damage to property with coverages and limits no less than shown in paragraphs (a) and (b). Bodily injury shall mean bodily injury, sickness, or disease, including death at anytime resulting therefrom. Property damage shall mean damages because of physical injury to or destruction of property, including loss of use of any property due to such injury or destruction. Physical damage shall mean direct and accidental loss of or damage to rolling stock and their contents, mechanical construction equipment or motive power equipment.

(a) **Railroad Protective Liability Insurance** shall be purchased on behalf of the Railroad Company with limits of $2,000,000 each occurrence; $6,000,000 aggregate applying separately to each annual period for lines without passenger trains. If the line carries passenger train(s), railroad protective liability insurance shall be purchased on behalf of the Railroad Company with limits of $5,000,000 each occurrence; $10,000,000 aggregate applying separately to each annual period.

Coverage shall be limited to damage suffered by the railroad on account of occurrences arising out of the work of the Contractor on or about the railroad right-of-way, independent of the railroad's general supervision or control, except as noted in paragraph 4 below.

Coverage shall include:

(1) death of or bodily injury to passengers of the railroad and employees of the railroad not covered by State workmen's compensation laws,

(2) personal property owned by or in the care, custody or control of the railroads,

(3) the Contractor, or any of the Contractor's agents or employees who suffer bodily injury or death as a result of acts of the railroad or its agents, regardless of the negligence of the railroads, and

(4) negligence of only the following classes of railroad employees:

(i) any supervisory employee of the railroad at the job site

(ii) any employee of the railroad while operating, attached to, or engaged on, work trains or other railroad equipment at the job site which are assigned exclusively to the Contractor, or

(iii) any employee of the railroad not within (i) or (ii) above who is specifically loaned or assigned to the work of the Contractor for prevention of accidents or protection or property, the cost of whose services is borne specifically by the Contractor or Governmental authority.

(b) **Contractor's Liability - Railroad**, including subcontractors, XCU and railroad contractual with limits of $1,000,000 each occurrence; $2,000,000 aggregate. **Automobile** with limits of $1,000,000 combined single limit any one accident; **Workers' Compensation and Employer's Liability** - statutory and $100,000 each accident; $100,000 each employee; $500,000 policy limit. **Excess/Umbrella Liability** $5,000,000 each occurrence; $5,000,000 aggregate. All coverage to be issued in the name of the Contractor shall be so written as to furnish protection to the Contractor respecting the Contractor's operations in performing work covered by the contract. Coverage shall include protection from damages arising out of bodily injury or death and damage or destruction of property which may be suffered by persons other than the Contractor's own employees.

In addition, the Contractor shall provide for and on behalf of each subcontractor by means of a separate and individual liability and property damage policy to cover like liability imposed upon the subcontractor as a result of the subcontractor's operations in the same amounts as contained above; or, in the alternative each subcontractor shall provide same.

907-107.15--Third Party Beneficiary Clause. In the first sentence of the first paragraph of Subsection 107.15 on page 61, change "create the public" to "create in the public".

907-107.17--Contractor's Responsibility for Work. Delete the fifth sentence of the fifth paragraph of Subsection 107.17 on page 63 and substitute the following.

The eligible permanent items shall be limited to traffic signal systems, changeable message signs, roadway signs and sign supports, lighting items, guard rail items, delineators, impact

attenuators, median barriers, bridge railing or pavement markings. The eligible temporary items shall be limited to changeable message signs, guard rail items, or median barriers.

907-107.18--Contractor's Responsibility for Utility Property and Services. After the first sentence of Subsection 107.18 on page 63, add the following:

Prior to any excavation on the project, the Contractor shall contact MS 811 and advise them to mark all known utilities in the area of the excavation.

MISSISSIPPI DEPARTMENT OF TRANSPORTATION

SUPPLEMENT TO SPECIAL PROVISION NO. 907-107-14

DATE: **06/03/2014**

SUBJECT: **Contractor's Protection Plan**

907-107.22.1--Contractor's Erosion Control Plan. Delete the first sentence of the second paragraph of Subsection 907-107.22.1 on page 1, and substitute the following.

The time between the Notice of Award and Notice to Proceed/Beginning of Contract Time in the proposal, has been allowed for the submittal and concurrence of the Contractor's erosion control plan, MDOT's review of the plan, and any revisions that may be necessary.

After the last paragraph of Subsection 907-107.22.1 on page 2, add the following.

As soon as the ECP has been approved, a copy of the SWPPP (Narrative, ECP with updates) shall be available on the project at all times. The Contractor shall provide and install a weatherproof enclosure, such as a mailbox, on the project at a location that will be readily accessible to the Engineer or others who may want to review the project ECP. The cost of installing and maintaining this enclosure shall be included in the prices bid for the various erosion control pay items and no direct payment will be made for this work.

MISSISSIPPI DEPARTMENT OF TRANSPORTATION

SPECIAL PROVISION NO. 907-107-14 **CODE: (IS)**

DATE: **05/22/2013**

SUBJECT: **Contractor's Protection Plan**

Section 107, Legal Relations and Responsibility to Public, of the 2004 Edition of the Mississippi Standard Specifications for Road and Bridge Construction is hereby amended as follows:

Delete in toto Subsection 107.22.1 on pages 65 and 66, and substitute the following.

907-107.22.1--Contractor's Erosion Control Plan. At the preconstruction conference or prior to starting any work on the project, the Contractor shall submit to the Project Engineer for concurrence a comprehensive erosion and siltation control plan. The plan shall utilize temporary measures and permanent erosion control features to provide acceptable controls during all stages of construction. If an early Notice to Proceed is desired, the Contractor's Erosion Control Plan should be submitted to the Engineer as soon as possible after award since an approved erosion control plan is required for an early Notice to Proceed.

Approximately 60 calendar days, the time between the Notice of Award and Notice to Proceed/Beginning of Contract Time in the proposal, has been allowed for the submittal and concurrence of the Contractor's erosion control plan, MDOT's review of the plan, and any revisions that may be necessary. The original contract time shall not be adjusted unless delays are caused solely by the Department for the submission, review, and concurrence of the Contractor's erosion control plan.

As a minimum, the plan shall include the following:

1. Erosion Control Plan (ECP) sheets or the plan profile sheets, 11" x 17" or larger, of all areas within the rights-of-way from the Beginning of the Project (BOP) to the End of the Project (EOP) showing the location of all temporary erosion control devices. Erosion control devices should be identified by exact type, temporary or permanent, configuration, and placement of each item to prevent erosion and siltation. A narrative of the Contractor's temporary erosion control plan shall be submitted in a format similar to the form attached to this special provision, but must include the heading and sub-heading information. As a minimum, the narrative shall include the following:
   - A detailed description, including locations (station numbers) of the Contractor's proposed sequence of operations including, but not limited to, clearing and grubbing, excavation, drainage, and structures.
   - A detailed description, including locations, and best management practices (BMP) that will be used to prevent siltation and erosion from occurring during the Contractor's proposed sequence of operations.

2. A copy of the certification for the Contractor's Certified Erosion Control Person whose primary duty shall be monitoring and maintaining the effectiveness of the erosion control plan, BMPs, and compliance with the NPDES permit requirements.
3. A plan for the disposal of waste materials on the project right-of-way which shall include but not be limited to the following:
   - containment and disposal of materials resulting from the cleaning (washing out) of concrete trucks that are delivering concrete to the project site.
   - containment and disposal of fuel / petroleum materials at staging areas on the project.

The erosion and siltation control plan shall be maintained on the project site at all times, updated as work progresses to show changes due to revisions in the sequences of construction operations, replacement of inadequate BMPs, and the maintenance of BMPs. Work shall not be started until an erosion control plan has been concurred with by the MDOT. The Engineer will have the authority to suspend all work and/or withhold payments for failure of the Contractor to carry out provisions of MDEQ's Storm Water Construction General Permit, the erosion control plan, updates to the erosion control plan, and /or proper maintenance of the BMPs.

907-107.22.2--Clearing and Grubbing, Haul Roads, Waste Areas, Plant Sites or Other Areas Occupied by the Contractor. Delete the fourth paragraph of Subsection 107.22.2 on page 66 and substitute the following.

Unless otherwise determined by the Engineer from a study of overall job conditions, the exposed surface area of erodible material at any one time on this project shall not exceed 19 acres without prior approval by the Engineer.

EXAMPLE
MISSISSIPPI DEPARTMENT OF TRANSPORTATION
Storm Water Pollution Prevention Plan (SWPPP)
Narrative

General Permit Coverage No: MSR_____
Project Number: _____
County: _____
Route: _____

SITE INFORMATION

This project consists of grading and installing drainage structures necessary to construct approximately 6 miles of parallel lanes on SR 31 between the Hinds County Line and the Rankin County Line.

SEDIMENT AND EROSION CONTROLS

VEGETATIVE CONTROLS: Clearing and grubbing areas will be minimized to comply with the buffer zones (minimum of 15 feet along the ROW lines and 5 feet along creeks) as per the contract documents. A combination of temporary and permanent grassing will be used to protect slopes as construction progresses. **Should a disturbed area be left undisturbed for 14 days or more, temporary or permanent vegetation will be placed within 7 calendar days.**

STRUCTURAL CONTROLS: Gravel construction entrance/exit will be installed near Stations 145+50, 159+50, 164+50 & 172+50. Riprap ditch checks will be constructed at Stations 144+50, 151+75, 162+00 & 166+25. The Concrete washout area will be at Stations 140+25, 152+00 & 168+50.

HOUSEKEEPING PRACTICES: Structural BPM's will be cleaned out when sediment reaches 1/3 to 1/2 of the height of the BMP. Maintenance and repair of equipment will be performed off-site, material wash out will occur either off-site or within designated wash out areas.

POST-CONSTRUCTION CONTROL MEASURES: As construction is completed, permanent vegetative growth will be established on disturbed soils to improve soil stability and provide a buffer zone for loose material. Paved ditches and flumes will be placed as specified in the ECP to reduce erosion in concentrated flow areas and rip rap will be placed as specified to dissipate flow energy and reduce flow velocity.

IMPLEMENTATION SEQUENCE

Perimeter controls will be installed first. Clearing and grubbing will be performed in 19-acre sections beginning at the BOP and temporary grassing will be installed as needed. Temporary erosion control BMP's will be installed at the drainage structures prior/during construction of the drainage structures. Grading activities will commence at the BOP and proceed towards the EOP, fill slopes will be permanently grassed in stages for fill heights that exceed 5 feet. Base materials will be installed on completed grading sections with the paving to follow.

MAINTENANCE PLAN

All erosion and sediment control practices will be checked for stability and operation following every rainfall but in no case less than once every week. Any needed repairs will be made immediately to maintain all practices as designed. Sediment basins will be cleaned out when the level of sediment reaches 2.0 feet below the top of the riser. Sediment will be removed from behind BMP's when it becomes about 1/3 to 1/2 height of BMP.

_____ _____
Prime Contractor's Signature Date

_____ _____
Printed Name Title

MISSISSIPPI DEPARTMENT OF TRANSPORTATION

SPECIAL PROVISION NO. 907-108-38 **CODE: (SP)**

DATE: 04/18/2016

SUBJECT: Prosecution and Progress

Section 108, Prosecution and Progress, of the 2004 Edition of the Mississippi Standard Specifications for Road and Bridge Construction is hereby amended as follows.

907-108.01--Subletting of Contract.

907-108.01.1--General. At the end of the last paragraph of Subsection 108.01.1 on page 73, add the following.

The Engineer will have the authority to suspend the work wholly or in part and to withhold payments because of the Contractor's failure to make prompt payment within 15 calendar days as required above, or failure to submit the required OCR-484 Form, Certification of Payments to Subcontractors, which is also designed to comply with prompt payment requirements.

907-108.02--Notice To Proceed. Delete the second paragraph of Subsection 108.02 on page 75 and substitute the following.

The anticipated date of the Notice to Proceed (NTP) / Beginning of Contract Time (BCT) will be specified in the proposal.

Delete the fourth paragraph of Subsection 108.02 on page 75 and substitute the following.

Upon written request from the Contractor and if circumstances permit, the Notice to Proceed may be issued at an earlier date subject to the conditions stated therein. The Contractor shall not be entitled to any monetary damages or extension of contract time for any delay claim or claim of inefficiency occurring between the early issuance Notice To Proceed date and the Notice to Proceed date stated in the contract.

907-108.03--Prosecution and Progress. Delete Subsection 108.03.1 on pages 75 & 76, and substitute the following.

907-108.03.1--Progress Schedule. On working day projects, the Department will furnish the Contractor a progress schedule developed for the determination of contract time which may be used as the contract progress schedule, or the Contractor's own proposed progress schedule may be submitted for approval. If the Contractor elects to furnish a progress schedule for approval by the Engineer, it should be furnished promptly after award of the contract.

On completion date projects which include A + B projects, the Contractor shall furnish a progress schedule and be prepared to discuss both its proposed methodologies for fulfilling the scheduling requirements and its sequence of operations.

On projects using A + C bidding, the Contractor shall furnish a progress schedule and be prepared to discuss both its proposed methodologies for fulfilling the scheduling requirements and its sequence of operations.

The Engineer will review Contractor prepared progress schedules and approve schedules as it relates to compliance with the specifications and logic. The progress schedule must be approved by the Engineer prior to commencing work. The progress schedule shall be a computer generated bar-chart type schedule meeting the below minimum requirements. These activities shall be significantly detailed enough to communicate the Contractor's understanding of the construction sequencing and phasing of the project.

When preparing the progress schedule, the Contractor shall include the following:

- Show a time scale to graphically show the completion of the work within contract time.
- Define and relate activities to the contract pay items.
- Show all activities in the order the work is to be performed including submittals, submittal reviews, fabrication and delivery.
- Show all activities that are controlling factors in the completion of the work.
- Show the time needed to perform each activity and its relationship in time to other activities.

This progress schedule shall provide a bar for each major phase of construction such as, but not limited to, clearing and grubbing, grading, drainage structures, bridges, base, shoulders, paving, etc. with an estimated start working day and completion working day for each bar, all within the specified contract time.

A revised progress schedule may be required within ten days of the occurrence of any one of the following conditions:

- when a major change occurs in the work
- when a time extension is granted
- when the progress schedule becomes unrealistic

The Engineer's approval of the aforementioned Progress Schedules does not waive any contract requirements.

In the event the Contractor has not submitted an approvable progress schedule by the beginning of contract time, the progress schedule prepared by the Department shall be the approved progress schedule and used to assess contract time.

An approved progress schedule shall be in effect until the date on which a revised schedule is approved. The approved progress schedule will be the basis for contract time assessment.

When a Critical Path Method (CPM) schedule is required in the proposal, this schedule will be used in lieu of the bar graph progress schedule in evaluating work progress. In such case, the same time frame noted in this subsection for the original submittal along with the update requirements will apply.

907-108.03.2--Preconstruction Conference. Delete the first paragraph of Subsection 108.03.2 on page 76 and substitute the following.

Prior to commencement of the work, a preconstruction conference shall be held for the purpose of discussing with the Contractor essential matters pertaining to the prosecution and satisfactory completion of the work. The Contractor will be responsible for scheduling the preconstruction conference. The Contractor will advise the Project Engineer in writing 14 days prior to the requested date that a conference is requested. When the contract requires the Contractor to have a certified erosion control person, the Contractor's certified erosion control person shall be at the preconstruction conference. The Department will arrange for utility representatives and other affected parties to be present.

Delete the third paragraph of Subsection 108.03.2 on page 76.

907-108.06--Determination and Extension of Contract Time. Delete Subsections 108.06.1 and 108.06.2 on pages 79 thru 85 and substitute the following.

907-108.06.1--Based on Working Day Completion.

907-108.06.1.1--General. Contract Time will be established on the basis of an allowable number of Working Days, as indicated in the contract. A working day is defined as a day the Contractor worked or could have worked in accordance with the conditions set forth in Subsection 907-108.06.1.2, Subparagraphs (a) and (b), except during the months of December, January, and February.

During the months of December, January, and February, time will be assessed in the miscellaneous phase regardless of whether or not the Contractor actually works. The value for the time on any particular day will be determined by dividing the number of anticipated working day shown in the following table by the number of days in the particular month. This number will be expressed to three decimal places (0.000)

The span of time allowed for the completion of the work included in the contract will be indicated in the contract documents and will be known as "Contract Time".

907-108.06.1.2--Contract Time. The following TABLE OF ANTICIPATED WORKING DAYS indicates an average/anticipated number of working days per month.

TABLE OF ANTICIPATED WORKING DAYS

Month	Working Days
January	6
February	7
March	11
April	15
May	19
June	20
July	21
August	21
September	20
October	16
November	11
December	5
Calendar Year	172

NOTE: The above Table is for informational purposes only. The actual working day total as assessed by the Project Engineer on Form CSD-765 shall govern.

On projects other than A + C projects, available working days will start being assessed at the original Notice to Proceed/Beginning of Contract Time date shown in the contract documents, regardless of whether or not the Contractor has been issued an early Notice to Proceed. On A + C projects, available working days will start being assessed at the original Notice to Proceed/Beginning of Contract Time date shown in the contract documents, or the earlier Notice to Proceed/Beginning of Contract Time date if an early Notice to Proceed is allowed.

Available working days will be based on soil and weather conditions and other specific conditions cited in the contract. The Engineer will determine on each applicable day the extent to which work in progress could have been productive, regardless of whether the Contractor actually worked.

An available working day will be assessed as follows:

(a) any day of the week, Monday through Friday, exclusive of legal holidays recognized by the Department in Subsection 108.04.1, in which the Contractor works or could have worked for more than six (6) consecutive hours on the controlling item(s) of work, as determined by the Engineer from the approved progress schedule. When the Contractor works or could work more than four but less than six consecutive hours, one-half (0.5) of an available work day will be charged for that day. When the Contractor works or could work six or more consecutive hours during the day, one (1.0) available work day will be charged for that day, and

(b) any Saturday, exclusive of legal holidays recognized by the Department in Subsection 108.04.1, in which the Contractor works for more than six (6) consecutive hours on the controlling item(s) of work, as determined by the Engineer from the approved progress schedule.

When the Contractor works less than four consecutive hours during the day, no time will be charged for that day. When the Contractor works more than four but less than six consecutive hours, one-half (0.5) of an available work day will be charged for that day. When the Contractor works six or more consecutive hours during the day, one (1.0) available work day will be charged for that day.

Should the weather or other conditions be such that four (4) consecutive satisfactory hours are not available prior to noon (for daytime operations) or midnight (for nighttime operations), no time will be assessed for that day regardless of the above conditions. However, if the Contractor elects to work, time will be assessed in accordance with the previous paragraph.

Time will not be charged during any required waiting period for placement of permanent pavement markings as set forth in Subsection 618.03 provided all other work is complete except growth and coverage of vegetative items as provided in Subsection 210.01.

Each month the Engineer will complete, and furnish to the Contractor, an "Assessment Report of Working Days" (CSD-765). This report shows the number of working days assessed during the estimate period and the cumulative working days assessed to date. The Contractor should review the Engineer's report as to the accuracy of the assessment and confer with the Resident or Project Engineer to rectify any differences. Each should make a record of the differences, if any, and conclusions reached. In the event mutual agreement cannot be reached, the Contractor will be allowed a maximum of 15 calendar days following the ending date of the monthly report in question to file a protest Notice of Claim in accordance with the provisions of Subsection 105.17. Otherwise, the Engineer's assessment shall be final unless mathematical errors of assessment are subsequently found to exist, and any claim of the Contractor as to such matter shall be waived.

The Contractor's progress will be determined monthly at the time of each progress estimate and will be based on the percentage of money earned by the Contractor compared to the percentage of elapsed time.

The percentage of money earned will be determined by comparing the total money earned to-date by the Contractor, minus any payment for advancement of materials, to the total dollar amount of the contract. The percentage of time elapsed will be determined by comparing the working days assessed to-date on Form CSD-765 to the total allowable working days for the contract.

When the "percent complete" lags more than 20 percent behind the "percentage of elapsed time", the Contractor shall immediately submit a written statement and revised progress schedule indicating any additional equipment, labor, materials, etc. to be assigned to the work to ensure completion within the specified contract time. When the "percent complete" lags more than 40 percent behind the "percentage of elapsed time", the contract may be terminated.

907-108.06.1.3--Extension of Time. The Contractor may, prior to the expiration of the Contract Time, make a written request to the Engineer for an extension of time with a valid justification for the request. The Contractor's plea that insufficient time was specified is not a valid reason for extension of time.

An extension of contract time may be granted for unforeseen utility delays, abnormal delays caused solely by the State or other governmental authorities, or unforeseeable disastrous phenomena of nature of the magnitude of earthquakes, hurricanes, named tropical storms, tornadoes, or flooded essential work areas which are deemed to unavoidably prevent prosecuting the work.

The span of time allowed in the contract as awarded is based on the quantities used for comparison of bids. If satisfactory fulfillment of the contract requires performance of work in greater quantities than those set forth in the proposal, the time allowed for completion shall be increased in Working Days in the same ratio that the cost of such added work, exclusive of the cost of work altered by Supplemental Agreement for which a time adjustment is made for such altered work in the Supplemental Agreement, bears to the total value of the original contract unless it can be established that the extra work was of such character that it required more time than is indicated by the money value.

Any extension of contract time will be on a working day basis.

The Contractor shall provide sufficient materials, equipment and labor to guarantee the completion of the work in the contract in accordance with the plans and specifications within the Contract Time.

If the contract time of the project is extended into a season of the year in which completion of certain items of work would be prohibited or delayed because of seasonal or temperature limitations, the Engineer may waive the limitations provided the completion of the work will not result in a reduction in quality. When determined that the completion of the out-of-season items will cause a reduction in the quality of the work, the completion of the project will be further extended so the items may be completed under favorable weather conditions. In either case, the Engineer will notify the Contractor in writing.

Liquidated damages as set forth in Subsection 907-108.07 under the heading "Daily Charge Per Calendar Day" in the Table titled "Schedule of Deductions for Each Day of Overrun in Contract Time", shall be applicable to each calendar day after the specified completion date, or authorized extension thereof, and until all work under the contract is completed.

907-108.06.1.4--Cessation of Contract Time. When the Engineer by written notice schedules a final inspection, time will be suspended until the final inspection is conducted and for an additional 14 calendar days thereafter. If after the end of the 14-day suspension all necessary items of work have not been completed, time charges will resume. If the specified completion date had not been reached at the time the Contractor called for a final inspection, the calendar day difference between the specified completion date and the date the Contractor called for a final inspection will be added after the 14-day period before starting liquidation damages. If a project is on liquidated damages at the time a final inspection is scheduled, liquidated damages will be suspended until the final inspection is conducted and for seven (7) calendar days thereafter. If after the end of the 7-day suspension all necessary items of work have not been completed, liquidated damages will resume. When final inspection has been made by the Engineer as prescribed in Subsection 105.16 and all items of work have been completed, the daily time charge will cease.

907-108.06.2--Based on Specified Completion Date.

907-108.06.2.1--General. Contract Time will be established on the basis of a Specified Completion Date indicated in the Contract, or as determined by the Contractor in accordance with the contract documents. The span of time allowed for the completion of the work included in the contract will be known as "Contract Time".

For contracts in which a Specified Completion Date is indicated in the Contract, the span of Contract Time shall be between the date of the Beginning of Contract Time and the Specified Completion Date indicated in the Contract.

For contracts in which a Completion Date is determined by the Contractor (A + B Contracts), the span of Contract Time shall be between the date of the Beginning of Contract Time and the date representing the number of Calendar Days determined by the Contractor to complete the work.

The Contractor shall provide sufficient materials, equipment and labor to guarantee the completion of the work in the contract in accordance with the plans and specifications within the Contract Time.

At any given date, the ratio of the accumulated monetary value of that part of the work actually accomplished to the total contract bid amount adjusted to reflect approved increases or decreases shall determine the "percent complete" of the work.

The Contractor's progress will be determined monthly at the time of each progress estimate and will be based on the percentage of money earned by the Contractor compared to the percentage of elapsed time.

The percentage of money earned will be determined by comparing the total money earned to-date by the Contractor, minus any payment for advancement of materials, to the total dollar amount of the contract. The percentage elapsed time shall be calculated as a direct ratio of the expired Calendar Days to the total Calendar Days provided for in the contract.

When the "percent complete" lags more than 20 percent behind the "percentage of elapsed time", the Contractor shall immediately submit a written statement and revised progress schedule indicating any additional equipment, labor, materials, etc. to be assigned to the work to ensure completion within the specified contract time. When the "percent complete" lags more than 40 percent behind the "percentage of elapsed time", the contract may be terminated.

907-108.06.2.2--Extension of Time. The Contractor may, prior to the expiration of the Contract Time, make a written request to the Engineer for an extension of time with a valid justification for the request. The Contractor's plea that insufficient time was specified is not a valid reason for extension of time.

On all completion date contracts, an extension of contract time may be granted for unforeseen utility delays, abnormal delays caused solely by the State or other governmental authorities, or unforeseeable disastrous phenomena of nature of the magnitude of earthquakes, hurricanes, named

tropical storms, tornadoes, or flooded essential work areas which are deemed to unavoidably prevent prosecuting the work.

The span of time allowed in the contract as awarded is based on the quantities used for comparison of bids. If satisfactory fulfillment of the contract requires performance of work in greater quantities than those set forth in the proposal, the time allowed for completion shall be increased in Calendar Days in the same ratio that the cost of such added work, exclusive of the cost of work altered by Supplemental Agreement for which a time adjustment is made for such altered work in the Supplemental Agreement, bears to the total value of the original contract unless it can be established that the extra work was of such character that it required more time than is indicated by the money value.

Any extension of contract time will be based on a calendar day basis, excluding Saturdays, Sundays or legal holidays recognized by the Department in Subsection 108.04.1.

If the contract time of the project is extended into a season of the year in which completion of certain items of work would be prohibited or delayed because of seasonal or temperature limitations, the Engineer may waive the limitations provided the completion of the work will not result in a reduction in quality. When determined that the completion of the out-of-season items will cause a reduction in the quality of the work, the completion of the project will be further extended so the items may be completed under favorable weather conditions. In either case, the Engineer will notify the Contractor in writing.

Liquidated damages as set forth in Subsection 907-108.07 under the heading "Daily Charge Per Calendar Day" in the Table titled "Schedule of Deductions for Each Day of Overrun in Contract Time", shall be applicable to each calendar day after the specified completion date, or authorized extension thereof, and until all work under the contract is completed.

907-108.06.2.3--Cessation of Contract Time. When the Engineer by written notice schedules a final inspection, time will be suspended until the final inspection is conducted and for an additional 14 calendar days thereafter. If after the end of the 14-day suspension all necessary items of work have not been completed, time charges will resume. If the specified completion date had not been reached at the time the Contractor called for a final inspection, the calendar day difference between the specified completion date and the date the Contractor called for a final inspection will be added after the 14-day period before starting liquidation damages. If a project is on liquidated damages at the time a final inspection is scheduled, liquidated damages will be suspended until the final inspection is conducted and for seven (7) calendar days thereafter. If after the end of the 7-day suspension all necessary items of work have not been completed, liquidated damages will resume. When final inspection has been made by the Engineer as prescribed in Subsection 105.16 and all items of work have been completed, the daily time charge will cease.

907-108.07--Failure to Complete the Work on Time. Delete the Schedule of Deductions table in Subsection 108.07 on page 85, and substitute the following.

Schedule of Deductions for Each Day of Overrun in Contract Time

Original Contract Amount		Daily Charge
From More Than	**To and Including**	**Per Calendar Day**
$ 0	100,000	$ 150
100,000	500,000	360
500,000	1,000,000	540
1,000,000	5,000,000	830
5,000,000	10,000,000	1,200
10,000,000	20,000,000	1,800
20,000,000	----------	3,500

907-108.10--Termination of Contractor's Responsibility. In the last sentence of Subsection 108.10 on page 88, change "bond" to "performance and payment bond(s)".

MISSISSIPPI DEPARTMENT OF TRANSPORTATION

SPECIAL PROVISION NO. 907-109-8 **CODE: (SP)**

DATE: 09/10/2015

SUBJECT: Measurement and Payment

Section 109, Measurement and Payment, of the 2004 Edition of the Mississippi Standard Specifications for Road and Bridge Construction is hereby amended as follows.

907-109.01--Measurement of Quantities. Delete the third full paragraph of Subsection 109.01 on page 90 and substitute the following.

When requested by the Contractor, material specified to be measured by the cubic yard or ton may be converted to the other measure as appropriate. Factors for this conversion will be determined by the District Materials Engineer and agreed to by the Contractor. The conversion of the materials along with the conversion factor will be incorporated into the contract by supplemental agreement. The supplemental agreement must be executed before such method of measurement is used.

After the second sentence of the fourth full paragraph of Subsection 109.01 on page 90, add the following.

Where loose vehicle measurement (LVM) is used, the capacity will be computed to the nearest one-tenth cubic yard and paid to the whole cubic yard. Measurements greater than or equal to nine-tenths of a cubic yard will be rounded to the next highest number. Measurements less than nine-tenths of a cubic yard will not be rounded to the next highest number. Example: A vehicle measurement of 9.9 cubic yards will be classified as a 10-cubic yard vehicle. A vehicle measurement of 9.8 cubic yards will be classified as a 9-cubic yard vehicle.

907-109.04--Extra and Force Account Work. Delete the first paragraph under Subsection 109.04 on page 91, and substitute the following.

When extra work results for any reason and is not handled as prescribed elsewhere herein, the Engineer and the Contractor will attempt to agree on equitable prices. When such prices are agreed upon, a Supplemental Agreement will be issued by the Engineer.

When the Supplemental Agreement process is initiated, the Contractor will be required to submit to the Engineer a detailed breakdown for Material, Labor, Equipment, Profit and Overhead. The total allowable markup (which includes Prime Contractor and Subcontractor work, if applicable) for Supplemental Agreement work shall not exceed 20%, which also includes tax and bond.

The requirement for detailed cost breakdowns may be waived when a Department's Bid Item History exists for the proposed item(s), and the Contractor's requested price, including mark-up, is within 20% of the Department's Bid History cost for that item(s). In any case, the Department reserves the right to request detailed cost breakdowns from the Contractor on any Supplemental Agreement request.

When equitable prices cannot be agreed upon mutually by the Engineer and the Contractor, the Engineer will issue a written order that work will be completed on a force account basis to be compensated in the following manner:

In the last sentence of subparagraph (b) in Subsection 109.04 on page 91, change "bond" to "bond(s)".

Delete the first and second paragraphs of subparagraph (d) in Subsection 109.04 on page 92 and substitute the following.

Equipment. For any machinery or special equipment, other than small tools, authorized by the Engineer, the Contractor will use the rates shown in the book entitled "Rental Rate Blue Book For Construction Equipment" as published by EquipmentWatch® and is current at the time the force account work is authorized, unless otherwise allowed by the Engineer. This book shall be used to determine equipment ownership and operating expense rates. These rates do not include allowances for operating labor, mobilization or demobilization costs, overhead or profit, and do not represent rental charges for those in the business of renting equipment. Operating labor and overhead cost will be allowed. Subject to advance approval of the Engineer, actual transportation cost for a distance of not more than 200 miles will be reimbursed for equipment not already on the project. The cost of transportation after completion of the force account work will be reimbursed except it cannot exceed the allowance for moving the equipment to the work.

907-109.06--Partial Payment.

907-109.06.1--General. Delete the fourth and fifth sentences of the third paragraph of Subsection 109.06.1 on page 94, and substitute the following.

In the event mutual agreement cannot be reached, the Contractor will be allowed a maximum of 25 calendar days following the Contractor's receipt of the monthly estimate in question to file in writing, a protest Notice of Claim in accordance with the provisions Subsection 105.17. Otherwise, the Engineer's estimated quantities shall be considered acceptable pending any changes made during the checking of final quantities.

907-109.06.2--Advancement on Materials. Delete Subsection 109.06.2 on pages 94 & 95, and substitute the following.

907-109.06.2--Advancement on Materials. Partial payments may include advance payment for certain nonperishable or durable materials such as base aggregates, reinforcing steel, bridge piling, structural steel, prefabricated bridge components, traffic signal equipment, electrical equipment, fencing materials, and sign materials with approval of the Engineer. Advance payment may be requested for structural steel members provided fabrication has been completed and the members have been declared satisfactory for storage by a Department representative. The Contractor must make a written request to the Project Engineer for advanced payment and furnish written consent of the Surety. To qualify for advance payment, materials must be stored or stockpiled on or near the project or at other locations approved by the Engineer; or in the case of precast concrete members, treated timber, guard posts and other approved preprocessed durable and bulky materials, the materials may be stored at the commercial producer's yard provided it is located in Mississippi; or in the case of prestressed concrete members that may

require being produced at an out-of-state location, the prestress members shall be produced and may be stored at the commercial manufacturer's yard provided it is a PCI certified plant on the Department's List of Approved Prestress & Precast Plants and it is located within the continental United States; or in the case of structural steel members that may require fabrication at an out-of-state location, the fabricated members may be stored at the location of the commercial fabricator's yard provided it is located within the continental United States.

Advancements will not be allowed until the Project Engineer has received copies of material invoices and certified test reports or acceptable certificates of conformance, and in the case of materials stored at the commercial producer's/fabricator's yard, the material shall be positively identified for the specific project and a Certificate of Storage issued by the Department or a designated representative of the Department. Requests for advancements on fabricated structural steel members and prestress concrete members stored out-of-state will be denied when the Department does not have available a designated representative to issue a Certificate of Storage.

The Contractor shall make suitable arrangements to the satisfaction of the Engineer for storage and protection at approved sites or, in the case of materials stored at the commercial producer's yard located in Mississippi or, in the case of fabricated structural steel members stored at the commercial fabricator's yard or prestress concrete members stored at a commercial manufacturer's yard located within the continental United States, the Contractor shall make arrangements with the producer/fabricator for suitable storage and protection. If advanced payment is allowed and the materials are damaged, lost, destroyed or for any reason become unacceptable, the previous payments will be deducted from subsequent estimates until the materials are replaced or restored to an acceptable condition. In all cases, the Contractor shall save harmless the Commission in the event of loss or damage, regardless of cause.

An invoice or an accumulation of invoices for each eligible material must total $10,000 or more before consideration will be given for making advanced payment. When allowed, advance payment will be based on verified actual material cost plus transportation charges to the point of storage. Sales tax, local haul and handling costs shall not be included as material cost.

Advanced payment shall not exceed 100% of the invoice price or 75% of the total contract bid price for the pay item, whichever is less.

Advanced payment for a component of a pay item shall not exceed 95% of the invoice price or 75% of the total contract bid price for the pay item of which the material is a part, whichever is less.

Advanced payment will be made only on materials that will be incorporated permanently in the project.

No advanced payment will be made on minor material items, hardware, etc.

No advanced payment will be made for materials when it is anticipated that those materials will be incorporated into the project within 60 calendar days.

Advanced payment will be paid for those materials which are not readily available, and which can be easily identified and secured for a specific project and for which lengthy stockpiling periods would not be detrimental.

Where a storage area is used for more than one project, material for each project shall be segregated from material for other projects, identified, and secured. Adequate access for auditing shall be provided. All units shall be stored in a manner so that they are clearly visible for counting and/or inspection of the individual units.

Unless specifically provided for in the contract, advance payment will not be made on materials, except for fabricated structural steel members or prestress concrete members, stored or stockpiled outside of the State of Mississippi.

Materials for which an advanced payment has been allowed must be paid for by the Contractor within 60 days of the estimate on which the advanced payment was first allowed and proof of said payment must be verified by the supplier. If proof of payment is not furnished within the allowable 60 days, the advanced payment will be deducted on subsequent current estimates until such time proof of payment is furnished.

As the materials are incorporated into the work, proportionate reductions for advance payments shall be made from monthly estimates covering the work performed. Calculation of percentage of completion, or rate of progress, shall be based on completed work and no consideration will be given to stockpiled materials.

907-109.07--Changes in Material Costs. Delete the third full paragraph of Subsection 109.07 on page 96 and substitute the following.

A link to the established base prices for bituminous products and fuels will be included in the contract documents under a Notice to Bidders entitled "Petroleum Products Base Prices."

Delete the last paragraph of Subsection 109.07 on pages 97 & 98, and substitute the following.

Adjustments herein provided shall not apply to fuels consumed or materials incorporated into the work during any monthly estimate period falling wholly after the expiration of contract time as defined in Subsection 101.02 of the applicable Mississippi Standard Specifications for Road and Bridge Construction, and as determined by checked final quantities.

MISSISSIPPI DEPARTMENT OF TRANSPORTATION

SPECIAL PROVISION NO. 907-110-2 **CODE: (SP)**

DATE: 04/02/2010

SUBJECT: Wage Rates

Section 110, Required Contract Provisions, of the 2004 Edition of the Mississippi Standard Specifications for Road and Bridge Construction is hereby amended as follows:

907-110.02--Application. Delete Subsection 110.02.2 on page 100 and substitute the following.

907-110.02.2--Wage Rates. All persons employed or working upon the site of the work will be paid at wage rates not less than those contained in the wage determination decision of the Secretary of Labor in effect 10 days prior to taking bids.

Bidders are advised that regardless of the wage rates listed in the Supplement to FHWA 1273 in the contract, minimum federal wage rates must be paid.

MISSISSIPPI DEPARTMENT OF TRANSPORTATION

SPECIAL PROVISION NO. 907-225-5 **CODE: (SP)**

DATE: **02/10/2016**

SUBJECT: **Grassing**

Section 225, Grassing, of the 2004 Edition of the Mississippi Standard Specifications for Road and Bridge Construction is hereby amended as follows.

Delete Section 225 on pages 158 thru 163, and substitute the following.

SECTION 907-225--GRASSING

907-225-01--Description. This work consists of furnishing, transporting, placing, plant establishment, and all work, including ground preparation, fertilizing, seeding, and mulching, necessary to produce a satisfactory and acceptable growth of grass.

At the Contractor's option, seeds and mulch may be incorporated using a hydraulically applied method under certain limitations. When hydraulically applied, it shall be performed in accordance with the requirements and methods addressed in Section 227. Under no circumstances shall fertilizer be incorporated hydraulically.

907-225.02--Materials.

907-225.02.1--Fertilizers. Fertilizers for purposes of this specification shall be understood to include standard manufactured products consisting of single or combination ingredients and agricultural limestone.

All fertilizer shall comply with the State fertilizer laws, Subsection 715.02, and the requirements of this specification.

907-225.02.2--Seeds. Seeds shall meet the requirements of Subsection 715.03, subject to the provisions of this subsection. The Contractor shall acquire seed from persons registered with the Mississippi Department of Agriculture and Commerce.

Except for the germination requirements, bags of seeds properly labeled or tagged according to law and indicating characteristics meeting or exceeding the requirements of Subsection 715.03 will be acceptable for planting.

The Contractor should provide adequate dry storage facilities for seeds, and shall furnish access to the storage for sampling stored seed.

907-225.02.3--Mulch.

907-225.02.3.1--Vegetative Mulch. The vegetative materials for mulch shall meet the

requirements of Subsection 215.02.

907-225.02.3.2--Hydraulically Applied Mulch (Hydromulch). Fibers for hydromulch shall be produced from wood, straw, cellulose, natural fibers, or recycled fibers which are free of non-biodegradable substances. The fiber shall disperse into a uniform slurry when mixed with water. Fibers shall be colored green, or other approved contrasting color, and shall not stain concrete or other surfaces. The use of tacifiers or activators will be allowed.

Hydromulch shall be listed on the Department's "Approved Sources of Materials".

907-225.02.3.2.1--Wood Fiber Mulch. Wood fiber mulch shall be made from wood chip particles manufactured particularly for discharging uniformly on the ground surface when dispersed by a hydraulic water sprayer. It shall remain in uniform suspension in water under agitation and blend with grass seed and fertilizer to form a homogeneous slurry. The fibers shall intertwine physically to form a strong moisture-holding mat on the ground surface and allow rainfall to percolate the underlying soil. The fiber material shall be heat processed so as to contain no germination or growth-inhibiting factors. The mulch shall be dyed an appropriate color to facilitate the application of material using non-toxic dye.

907-225.02.3.2.2--Cellulose Fiber Mulch. Cellulose fiber mulch consist of recycled paper stock products which are shredded into small pieces particular for application by hydraulic seeding equipment. It shall mix readily and uniformly under agitation with water and blend with grass seed and fertilizer to form a homogeneous slurry. When applied to the ground surface, the material shall form a strong moisture-holding mat, allow rainfall to percolate the underlying soil, and remain in place until the grass root system is established. The material shall contain no growth inhibiting characteristic or organisms. The mulch shall be dyed an appropriate color to facilitate the application of material using non-toxic dye.

907-225.02.3.2.3--Wood/Cellulose Fiber Mulch. Wood/cellulose fiber mix hydroseeding mulch shall consist of a combination of the above wood and cellulose fibers at a ratio recommended by the manufacturer of the products.

907-225.02.3.2.4--Straw Mulch. Straw mulch shall consist of a natural straw fiber. This material shall be a minimum 90% straw and essentially free from plastic materials or other non-bio degradable substances. The material shall be disperse into a uniform mulch slurry when mixed with water.

907-225.02.3.2.5--Tackifier. The tackifier will serve the purpose of an adhesive to form a bond between the soil, fiber, and seed particles. It will also allow the soil to retain moisture. The tackifier shall be of the organic or synthetic variety.

907-225.03--Construction Requirements.

907-225.03.1--Ground Preparation. Ground preparation, light or standard, consists of plowing, loosening, and pulverizing the soil to form suitable beds for erosion control items in reasonably close conformity with the established lines and grades without appreciable humps or depressions. When grassing an area that has been previously planted with temporary grassing, a standard ground preparation will be required. The previously planted grasses shall be disked, tilled,

plowed, etc. to assure that the existing temporary grasses are thoroughly mixed into the soil.

Any equipment used for ground preparation shall be approved units suitable to perform the work and subject to the requirements of Subsection 108.05.

The Contractor shall take full advantage of weather and soil conditions, and no attempt shall be made to prepare soil when it is wet or in a condition which will not allow the soil to be properly tilled.

Light ground preparation should be used on areas where seeding is required to improve the coverage of partially vegetated areas.

Standard ground preparation should be used on areas designated to be solid sodded and unvegetated areas designated to be seeded.

Aerating, moistening, or otherwise bringing the soil to a suitable condition for ground preparation shall be considered as incidental to the work and will not be measured for separate payment.

907-225.03.1.1--Light Ground Preparation. Light ground preparation consists of scratching the surface with a close-tooth harrow, disk-harrow, or similar equipment. The depth of scratching should be at least three-quarters inch but not deep enough to damage existing grasses of the type being planted.

907-225.03.1.2--Standard Ground Preparation. Standard ground preparation consists of plowing or disk-harrowing and thoroughly pulverizing the areas immediately before the application of erosion control (vegetative) items. Unless otherwise specified, the pulverized and prepared seedbed should be at least four inches deep and shall be reasonably free of large clods, earthballs, boulders, stumps, roots and other objectionable matter. Incorporation of fertilizer and ground preparation may be performed simultaneously.

907-225.03.2--Fertilizing. Fertilizing consists of furnishing, transporting, spreading, and incorporating fertilizers. The Contractor shall furnish all equipment necessary to properly handle, store, uniformly spread, and incorporate the specified application of fertilizer.

The Contractor shall incorporate 13-13-13 commercial fertilizer at the rate indicated in the vegetation schedule in the plans. The equivalent rate of other type fertilizers will be allowed if the equivalent percentages of Nitrogen, Phosphorus and Potassium are obtained. The Contractor shall incorporate agricultural limestone at the rate indicated in the vegetation schedule in the plans. Fertilization shall be applied uniformly on the areas to be planted or seeded and uniformly incorporated into the soil.

Fertilizers should be applied on individual areas of not more than three (3) acres.

All fertilizer should be incorporated within 24 hours following spreading.

907-225.03.3--Seeding. Seeding consists of furnishing and planting seeds in a prepared seedbed, covering the seeds, and providing plant establishment on all areas seeded.

Prior to planting the seeds, ground preparation and fertilizing shall be satisfactorily performed.

The required type of seeds, minimum rates of application, and planting dates of seeds are shown in the vegetation schedule in the plans.

It is the Contractor's responsibility to apply an ample amount of each type of seed to produce a satisfactory growth of grass and of the seed type required. At the completion of the project, a satisfactory growth of grass will be required. Reference Section 210 for satisfactory growth and coverage of dormant seed.

Seeding should not be done during windy weather or when the ground is frozen, extremely wet, or in a condition which will not allow the soil to be properly tilled.

907-225.03.3.1--Conventional Application. Legume seeds should be treated in accordance with Subsection 715.03.4 immediately before sowing. Seeds should be uniformly sown over the entire area with mechanical seeders. Seeds of different sizes may necessitate separate sowing. When legume seeds become dry, they should be re-inoculated.

All seeds should be covered lightly with soil by raking, rolling, or other approved methods, and the area compacted with a cultipacker.

Mulching should be performed as soon as practicable after seeding.

907-225.03.3.2--Hydroseeding Application. Seeds may be applied using the hydroseeding method except during the months of June, July, August, and September. During these months, the seeding shall be incorporated in accordance with the above Conventional Application method.

The seed(s) shall be combined into a distribution tank with all required ingredients on the project site. The application of the seed(s) and all ingredients shall be performed in one operation.

Mulching should be performed simultaneously with or as soon as practicable after seeding.

907-225.03.3.3--Plant Establishment. The Contractor should provide plant establishment on all areas seeded until release of maintenance. At the completion of the project, a satisfactory growth of grass will be required. The Contractor should reference Subsection 210 for satisfactory growth and coverage of dormant seed.

Plant establishment should be provided for a minimum period of 45 calendar days after completion of seeding. In the event satisfactory growth and coverage has not been attained by the end of the 45-day period, plant establishment should be continued until a satisfactory growth and coverage is provided for at least one kind of plant as referenced in Section 210. The Contractor shall perform plant establishment on all areas of temporary seeding until the Engineer determines that the temporary seeding has served its purpose.

Plant establishment shall consist of preserving, protecting, watering, reseeding, mowing, and other work necessary to keep the seeded areas in satisfactory condition.

Areas requiring reseeding should be prepared and seeded and all other work performed as if the reseeding was the initial seeding. The types and application rates of fertilizer will be at the discretion of the Contractor.

907-225.03.3.4--Growth and Coverage. It shall be the Contractor's responsibility to provide satisfactory growth and coverage of grasses, legumes, or combination produced from the specified seeding.

Growth and coverage on seeded areas will be considered to be in reasonably close conformity with the intent of the contract when the type of vegetation specified, exclusive of that from seeds not expected to have germinated and shows growth at that time, has reached a point of maturity where stems or runners overlap adjacent similar growth in each direction over the entire area.

907-225.03.4--Mulching. Mulching consists of furnishing, transporting, and placing mulch on slopes, shoulders, medians, and other designated areas. Unless otherwise noted in the contract or directed by the Engineer, the Contractor has the option to place mulch by the conventional method or by the hydraulic method.

907-225.03.4.1--Vegetative Mulch.

907-225.03.4.1.1--Equipment. Mulching equipment should be capable of maintaining a constant air stream which will blow or eject controlled quantities of mulch in a uniform pattern.

Mulch stabilizers should consist of dull blades or disks without camber and approximately 20 inches in diameter. The disks should be notched, should be spaced at approximately 8-inch intervals, and should be equipped with scrapers. The stabilizer should weigh approximately 1000 to 1200 pounds, should have a working width of no more than eight feet, and should be equipped with a ballast compartment, so that weight can be increased.

907-225.03.4.1.2--Placement of Vegetative Mulch. Mulching should be placed uniformly on designated areas within 24 hours following seeding unless weather conditions are such that mulching cannot be performed. Placement should begin on the windward side of areas and from tops of slopes. In its final position, the mulch should be loose enough to allow air to circulate but compact enough to partially shade the ground and reduce erosion.

The baled material should be loosened and broken thoroughly before it is fed into the machine to avoid placement of unbroken clumps.

907-225.03.4.1.3--Anchoring Mulch. The mulch should be anchored by using a mulch stabilizer when not hydraulically applied. If a mulch stabilizer is used, the mulch should be punched into the soil for a minimum depth of one inch.

When mulch stabilizers are used, anchoring the mulch should be performed along the contour of the ground surface.

907-225.03.4.2--Hydromulch. Hydromulch shall be applied in accordance with the installation instructions and recommendations of the manufacturer. Hydromulch shall be uniformly applied

at the manufacturer's recommended application rate. In no case shall the application rate be less than one (1) ton per acre.

907-225.03.4.3--Protection and Maintenance. The Contractor should maintain and protect mulched areas until the Release of Maintenance of the project. The Contractor should take every precaution to prevent unnecessary foot and vehicular traffic.

The Contractor should mow, remove or destroy any undesirable growth on all areas mulched as soon as any undesirable growth appears. This will prevent competition with the desired plants and to prevent reseeding of undesirable growth.

907-225.03.5--Hydro Equipment. The equipment for hydraulically applying seed and mulch shall have a built-in agitation system with an operating capacity sufficient to agitate, suspend, and homogeneously mix slurry of the specified amount of fiber, seed, and water. The slurry distribution lines shall be large enough to prevent stoppage. The discharge line shall be equipped with a set of hydraulic spray nozzles, which will provide even distribution of the slurry on the various areas to be seeded.

The mixture shall all be combined into the slurry tank for distribution of all ingredients in one operation as specified herein. The materials shall be combined in a manner recommended by the manufacturer. The slurry mixture shall be so regulated that the amounts and rates of application shall result in a uniform application of all materials at rates not less than the amounts specified. Using the color of the mulch as a guide, the equipment operator shall spray the prepared seedbed with a uniform visible coat. The slurry shall be applied in a sweeping motion, in an arched stream, so as to fall like rain, allowing the mulch to build upon each other until an even coat is achieved.

907-225.03.6--Vegetation Schedule. When a vegetation schedule is not shown in the plans or when the contract does not have an official set of plans, the following application rates shall be used, unless otherwise noted or approved by the Engineer.

Agricultural Limestone	1,000 pounds per acre	March 1 to September 1
13-13-13 Commercial Fertilizer	250 pounds per acre	March 1 to September 1
Vegetative Materials	2 tons per acre	
Bermudagrass	80 pounds per acre	March 1 to September 1
	20 pounds per acre	September 1 to March 1 *
Bahiagrass	80 pounds per acre	March 1 to September 1
	25 pounds per acre	September 1 to March 1
Tall Fescue	25 pounds per acre	March 1 to September 1
	100 pounds per acre	October 1 to March 1 **
Sericea Lespedeza	25 pounds per acre	March 1 to September 1
	25 pounds per acre	September 1 to March 1
Crimson Clover	20 pounds per acre	August 1 to April 1

* 80 pounds per acre in District 3 Delta
** 25 pounds per acre in District 3 Delta

907-225.04--Method of Measurement. Grassing will be measured by the acre. Acceptance will be based on a satisfactory growth and coverage of seeds planted.

Acceptable quantities of agricultural limestone will be measured by the ton.

Acceptable quantities for mulch will be measured by the ton. For vegetative mulch, the weight for measurement will be the product of the number of bales acceptably placed and the average weight per bale as determined on approved scales provided by the Contractor. Anchoring of vegetative mulch will not be measured for separate payment. The cost of anchoring shall be absorbed in the prices bid for other items of work. For hydromulch, the weight for measurement will be the dry weight of the packaged fibers used in the mixture. No payment will be allowed for water, additives, tackifier, or other liquids used in the mixture.

907-225.05--Basis of Payment. Grassing, measured as prescribed above, will be paid for at the contract unit price per acre, which will be full compensation for all required materials including seeding and fertilizers other than limestone, ground preparation, equipment, labor, testing and all work necessary to establish a satisfactory growth of grass.

Hard rock agricultural limestone will be paid for at the contract unit price per ton. Hard rock agricultural limestone with a relative neutralizing value (RNV), determined in accordance with Subsection 907-715-02.2.1.3, of between 60.0% and 62.9% will be paid for at half (½) the contract unit price per ton. No payment will be made for hard rock agricultural limestone with an RNV less than 60.0%.

Mulch, measured as prescribed above, will be paid for at the contract unit price per ton, which price shall be full compensation for all materials, equipment, labor, and incidentals necessary to complete the work.

Payment will be made under:

907-225-A:	Grassing	- per acre
907-225-B:	Agricultural Limestone	- per ton
907-225-C:	Mulch, Vegetative Mulch	- per ton
907-225-D:	Mulch, Hydromulch	- per ton

MISSISSIPPI DEPARTMENT OF TRANSPORTATION

SPECIAL PROVISION NO. 907-226-3 **CODE: (IS)**

DATE: 10/28/2014

SUBJECT: Temporary Grassing

Section 907-226, Temporary Grassing, is hereby added to and made part of the 2004 Edition of the Mississippi Standard Specifications for Road and Bridge Construction as follows:

SECTION 907-226 -- TEMPORARY GRASSING

907-226.0l--Description. This work consists of furnishing, transporting, placing, plant establishment and all work necessary to produce rapid-growing grasses, grains or legumes to provide an initial, temporary cover of grass. This work includes ground preparation, fertilizing, seeding and mulching necessary to establish a satisfactory growth of temporary grass. The Contractor may elect to place temporary grassing using the hydroseeding method as set out in Special Provision No. 907-227, as modified by this special provision.

The Engineer or the plans will designate areas to be temporarily grassed. Any other areas the Contractor desires to grass will be measured for payment only if agreed upon by the Engineer.

907-226.02--Materials.

907-226.02.1--Fertilizers. Fertilizers for purposes of these specifications shall be understood to include standard manufactured products consisting of a combination of ingredients.

All fertilizer shall comply with the State fertilizer laws and Subsection 715.02.

Agricultural limestone will not be requirement for temporary grassing.

907-226.02.2--Seeds. Seeds shall meet the requirements of Subsection 715.03, subject to the provisions of this subsection. The Contractor shall acquire seed from persons registered with the Mississippi Department of Agriculture and Commerce.

Except for the germination requirements, bags of seeds properly labeled or tagged according to law and indicating characteristics meeting or exceeding the requirements of Subsection 715.03 will be acceptable for planting.

The Contractor should provide adequate dry storage facilities for seeds, and shall furnish access to the storage for sampling stored seed.

907-226.02.3--Mulching. The vegetative materials for mulch shall meet the requirements of Subsection 715.05.

When used, bituminous material for mulch shall be Emulsified Asphalt, Grade SS-1, meeting the requirement of Subsection 702.07.

907-226.03--Construction Requirements. The rates of application shall not exceed the rates shown on the temporary vegetation schedule, unless otherwise approved by the Engineer. Any unauthorized overage due to increased application rates will not be measured for payment.

907-226.03.1--Ground Preparation. Any equipment used for ground preparation shall be approved units suitable to perform the work and subject to the requirements of Subsection 108.05.

Light ground preparation should be used on areas where seeding is required.

Light ground preparation consists of scratching the surface with a close-tooth harrow, disk-harrow, or similar equipment. The depth of scratching should be at least three-quarters inch but not deep enough to damage existing grasses of the type being planted.

Aerating, moistening, or otherwise bringing the soil to a suitable condition for ground preparation shall be considered as incidental to the work and will not be measured for separate payment.

907-226.03.2--Fertilizing. The Contractor shall furnish all equipment necessary to properly handle, store, uniformly spread, and incorporate the specified application of fertilizer.

The Contractor shall incorporate 13-13-13 commercial fertilizer at the rate shown in the vegetation schedule in the plans. The equivalent rate of other type fertilizers will be allowed if the equivalent percentages of Nitrogen, Phosphorus and Potassium are obtained. Fertilization shall be applied uniformly on the areas to be seeded and uniformly incorporated into the soil.

Fertilizer should be applied on individual areas of not more than three acres.

All fertilizer should be incorporated within 24 hours following spreading.

907-226.03.3--Seeding.

907-226.03.3.1--General. Prior to planting the seeds, ground preparation and fertilizing should have been satisfactorily performed.

The required type of seeds, recommended rates of application and recommended planting dates of seeds are shown in the vegetation schedule in the plans.

It is the Contractor's responsibility to apply an ample amount of each type of seed to produce a satisfactory growth of grass and of the seed type required.

Legume seeds should be treated in accordance with Subsection 715.03.4 immediately before sowing. Seeds should be uniformly sown over the entire area with mechanical seeders. Seeds of

different sizes may necessitate separate sowing. When legume seeds become dry, they should be reinoculated.

Seeding should not be done during windy weather or when the ground is frozen, extremely wet, or in an untillable condition.

All seeds should be covered lightly with soil by raking, rolling, or other approved methods, and the area compacted with a cultipacker.

907-226.03.3.2--Plant Establishment. Plant establishment shall consist of preserving, protecting, watering, reseeding, and other work necessary to keep the seeded areas in satisfactory condition.

Areas requiring reseeding should be prepared and seeded and all other work performed as if the reseeding was the initial seeding. The types and application rates of fertilizer will be at the discretion of the Contractor. No additional measurement and payment will be made for re-seeding when payment was made for the initial seeding.

907-226.03.3.3--Growth and Coverage. It shall be the Contractor's responsibility to provide satisfactory growth and coverage of grasses, legumes, or combination produced from the specified seeding.

Growth and coverage on seeded areas will be considered to be in reasonably close conformity with the intent of the contract when the type of vegetation specified, exclusive of that from seeds not expected to have germinated and shows growth at that time, has reached a point of maturity where stems or runners overlap adjacent similar growth in each direction over the entire area.

907-226.03.4--Mulching.

907-226.03.4.1--Equipment. Mulching equipment should be capable of maintaining a constant air stream which will blow or eject controlled quantities of mulch in a uniform pattern. If asphalt is used, a jet or spray nozzle for applying uniform, controlled amounts of asphalt to the vegetative material as it is ejected should be located at or near the discharge spout.

Mulch stabilizers should consist of dull blades or disks without camber and approximately 20 inches in diameter. The disks should be notched, should be spaced at approximately 8-inch intervals, and should be equipped with scrapers. The stabilizer should weigh approximately 1000 to 1200 pounds, should have a working width of no more than eight feet, and should be equipped with a ballast compartment, so that weight can be increased.

907-226.03.4.2--Placement of Vegetative Mulch. If required, mulching should be placed uniformly on designated areas within 24 hours following seeding unless weather conditions are such that mulching cannot be performed. Placement should begin on the windward side of areas and from tops of slopes. In its final position, the mulch should be loose enough to allow air to circulate but compact enough to partially shade the ground and reduce erosion.

The baled material should be loosened and broken thoroughly before it is fed into the machine to avoid placement of unbroken clumps.

907-226.03.4.3--Rates of Application and Anchoring Mulch. The recommended rate of application of vegetative mulch shall be as shown in the vegetation schedule in the plans. The mulch should be anchored by either the use of a mulch stabilizer or by tacking with bituminous material. If a mulch stabilizer is used, the mulch should be punched into the soil for a minimum depth of one inch. If bituminous material is used, the rate of application should be 150 gallons per acre.

Where steep slopes or other conditions are such that anchoring cannot be performed satisfactory with a mulch stabilizer, the Contractor may elect to use bituminous material applied at the time or immediately following the mulch placement.

When mulch stabilizers are used, anchoring the mulch should be performed along the contour of the ground surface.

907-226.03.4.4--Protection and Maintenance. The Contractor should take every precaution to prevent unnecessary foot and vehicular traffic.

907-226.03.5--Vegetation Schedule. When a temporary vegetation schedule is not shown in the plans or when the contract does not have an official set of plans, the following application rates shall be used, unless otherwise noted or approved by the Engineer.

Spring & Summer
Browntop Millet ---------- 20 pounds per acre------- April 1 to August 31

Fall & Winter
Rye Grass ---------- 25 pounds per acre------- September 1 to March 31
Oats ---------- 90 pounds per acre------- September 1 to December 15

13-13-13 Commercial Fertilizer ----- 250 pounds per acre
Vegetative Mulch ---------- 2 tons per acre

907-226.04--Method of Measurement. Temporary grassing will be measured by the acre. Acceptance will be based on a satisfactory growth and coverage of seeds planted.

907-226.05--Basis of Payment. Temporary grassing, measured as prescribed above, will be paid for at the contract unit price per acre, which will be full compensation for all required materials, equipment, labor, testing and all work necessary to establish a satisfactory growth of grass.

Payment will be made under:

907-226-A: Temporary Grassing - per acre

MISSISSIPPI DEPARTMENT OF TRANSPORTATION

SPECIAL PROVISION NO. 907-227-10 **CODE: (IS)**

DATE: 01/25/2012

SUBJECT: Hydroseeding

Section 907-227, Hydroseeding, is hereby added to and made part of the 2004 Edition of the Mississippi Standard Specifications for Road and Bridge Construction as follows:

SECTION 907-227--HYDROSEEDING

907-227.0l--Description. This work consists of furnishing, transporting, placing, plant establishment and all work necessary to produce a satisfactory and acceptable growth of grass. The seeds, fertilizers, tackifier, and mulch shall be incorporated using the hydroseeding process. These items shall be combined into a mixture and force-applied to the areas to be grassed.

907-227.02--Materials. The Contractor shall, prior to application, furnish the Engineer with invoices of all materials used in the grassing operation.

907-227.02.1--Fertilizers. Fertilizers for purposes of these specifications shall be understood to include standard manufactured products consisting of single or combination ingredients.

All fertilizers shall comply with the State fertilizer laws and Subsection 715.02.

907-227.02.2--Seeds. Seeds shall meet the requirements of Subsection 715.03, subject to the provisions of this subsection. The Contractor shall acquire seed from persons registered with the Mississippi Department of Agriculture and Commerce.

Except for the germination requirements, bags of seeds properly labeled or tagged according to law and indicating characteristics meeting or exceeding the requirements of Subsection 715.03 will be acceptable for planting.

The Contractor should provide adequate dry storage facilities for seeds, and shall furnish access to the storage for sampling stored seed.

907-227.02.3--Mulching. The rate of application of fiber mulch shall be as recommended by the manufacture of the fibers mulch.

907-227.02.3.1--Wood Fiber Mulch. Wood fiber mulch shall be made from wood chip particles manufactured particularly for discharging uniformly on the ground surface when dispersed by a hydraulic water sprayer. It shall remain in uniform suspension in water under agitation and blend with grass seed and fertilizer to form a homogeneous slurry. The fibers shall intertwine physically to form a strong moisture-holding mat on the ground surface and allow rainfall to percolate the underlying soil. The fiber material shall be heat processed so as to

contain no germination or growth-inhibiting factors. The mulch shall be dyed an appropriate color to facilitate the application of material using non-toxic dye.

907-227.02.3.2--Cellulose Fiber Mulch. Cellulose fiber mulch consist of recycled paper stock products which are shredded into small pieces particular for application by hydraulic seeding equipment. It shall mix readily and uniformly under agitation with water and blend with grass seed and fertilizer to form a homogeneous slurry. When applied to the ground surface, the material shall form a strong moisture-holding mat, allow rainfall to percolate the underlying soil, and remain in place until the grass root system is established. The material shall contain no growth inhibiting characteristic or organisms. The mulch shall be dyed an appropriate color to facilitate the application of material using non-toxic dye.

907-227.02.3.3--Wood/Cellulose Fiber Mulch. Wood/cellulose fiber mix hydroseeding mulch shall consist of a combination of the above wood and cellulose fibers at a ratio recommended by the manufacturer of the products.

907-227.02.3.4--Straw Mulch. Straw mulch shall consist of a natural straw fiber. This material shall be a minimum 90% straw and essentially free from plastic materials or other non-bio degradable substances. The material shall be disperse into a uniform mulch slurry when mixed with water.

907-227.02.3.5--Tacifier. The tackifier will serve the purpose of an adhesive to form a bond between the soil, fiber, and seed particles. It will also allow the soil to retain moisture.

The tackifier shall be of the organic or synthetic variety.

907-227.03--Construction Requirements.

907-227.03.1--Ground Preparation. Light ground preparation consists of plowing, loosening, and pulverizing the soil to form suitable beds for seeding items in reasonably close conformity with the established lines and grades without appreciable humps or depressions. Unless otherwise specified, the pulverized and prepared seedbed should be at least four inches deep and shall be reasonably free of large clods, earth balls, boulders, stumps, roots and other objectionable matter. The Engineer may eliminate or alter the requirements for ground preparation due to site conditions.

907-227.03.2--Fertilizing. The Contractor shall furnish all equipment necessary to properly handle, store, uniformly spread, and incorporate the specified application of fertilizer.

The Contractor shall incorporate bag fertilizer at a rate of 1000 pounds per acre of 13-13-13 commercial fertilizer. The equivalent rate of other type fertilizers will be allowed if the equivalent percentages of Nitrogen, Phosphorus and Potassium are obtained. Any changes in the type or rate of application of the fertilizers shall be approved by the Engineer prior to being incorporated.

Agricultural limestone will be incorporated into the area and paid for in accordance with Section 213 of the Standard Specifications.

907-227.03.3--Seeding.

907-227.03.3.1--General. The Contractor shall use the vegetation schedule in the plan for the correct types of seed and application rates, unless otherwise noted or approved by the Engineer.

When a vegetation schedule for permanent grass is not shown in the plans, the following types of seed and application rates shall be used, unless otherwise approved by the Engineer.

Bermudagrass ----------	20 pounds per acre
Bahiagrass ----------	25 pounds per acre
Tall Fescue ----------	15 pounds per acre
Crimson Clover ----------	20 pounds per acre

At the completion of the project, a satisfactory growth of grass will be required. The Contractor should reference Subsection 210 for satisfactory growth and coverage of dormant seed.

907-227.03.3.2--Plant Establishment. The Contractor should provide plant establishment on all areas seeded until release of maintenance. Plant establishment shall consist of preserving, protecting, watering, reseeding, mowing, and other work necessary to keep the seeded areas in satisfactory condition.

Plant establishment should be provided for a minimum period of 45 calendar days after completion of seeding. In the event satisfactory growth and coverage has not been attained by the end of the 45-day period, plant establishment should be continued until a satisfactory growth and coverage is provided for at least one kind of plant. The Contractor should reference Section 210 of the Standard Specifications for more information.

907-227.03.3.3--Growth and Coverage. It shall be the Contractor's responsibility to provide satisfactory growth and coverage of grasses, legumes, or combination produced from the specified seeding.

Growth and coverage on seeded areas will be considered to be in reasonably close conformity with the intent of the contract when the type of vegetation specified, exclusive of that from seeds not expected to have germinated and shows growth at that time, has reached a point of maturity where stems or runners overlap adjacent similar growth in each direction over the entire area.

Final acceptance of the project will not be made until a satisfactory growth of grass has been acknowledged by the Engineer.

907-227.03.4--Mulching. At the Contractor's option, mulch may be wood fiber, cellulose fiber, a mixture of wood and cellulose fibers, or straw fiber. The mulch shall be applied at the rate recommended by the manufacturer in a mixture of water, seed and fertilizer. Any changes in the rate of application of the mulch shall be approved by the Engineer prior to its use.

907-227.03.5--Equipment. Hydraulic equipment shall be used for the application of fertilizers, seeds and slurry of the prepared mulch. This equipment shall have a built-in agitation system with an operating capacity sufficient to agitate, suspend, and homogeneously mix slurry of the specified amount of fiber, fertilizer, seed and water. The slurry distribution lines shall be large enough to prevent stoppage. The discharge line shall be equipped with a set of hydraulic spray nozzles, which will provide even distribution of the slurry on the various areas to be seeded.

The seed, fertilizer, mulch and water shall all be combined into the slurry tank for distribution of all ingredients in one operation as specified herein. The materials shall be combined in a manner recommended by the manufacturer. The slurry mixture shall be so regulated that the amounts and rates of application shall result in a uniform application of all materials at rates not less than the amounts specified. Using the color of the mulch as a guide, the equipment operator shall spray the prepared seedbed with a uniform visible coat. The slurry shall be applied in a sweeping motion, in an arched stream, so as to fall like rain, allowing the mulch to build upon each other until an even coat is achieved.

907-227.03.6--Protection and Maintenance. The Contractor should maintain and protect seeded areas until release of maintenance of the project. The Contractor should take every precaution to prevent unnecessary foot and vehicular traffic.

The Contractor should mow or otherwise remove or destroy any undesirable growth on all areas mulched to prevent competition with the desired plants and to prevent reseeding of undesirable growth.

907-227.04--Method of Measurement. Hydroseeding, complete and accepted, will be measured by the acre. No separate payment will be made for ground preparation, seeds, fertilizers, or mulch. Acceptance will be based on a satisfactory growth and coverage of seeds planted.

Agricultural limestone shall be measured and paid for under Section 213 of the Standard Specifications.

907-227.05--Basis of Payment. Hydroseeding, measured as prescribed above, will be paid for at the contract unit price per acre, which will be full compensation for all required materials, equipment, labor, testing and all work necessary to establish a satisfactory growth of grass.

Payment will be made under:

907-227-A: Hydroseeding - per acre

MISSISSIPPI DEPARTMENT OF TRANSPORTATION

SPECIAL PROVISION NO. 907-234-5 **CODE: (SP)**

DATE: **09/23/2010**

SUBJECT: **Siltation Barriers**

Section 234, Silt Fence, of the 2004 Edition of the Mississippi Standard Specifications for Road and Bridge Construction is hereby amended as follows.

907-234.01--Description. Delete the first paragraph of Subsection 234.01 on page 177 and substitute the following:

This work consists of furnishing, constructing and maintaining a water permeable filter type fence, inlet siltation guard or turbidity barrier for the purpose of removing suspended soil particles from the water passing through it in accordance with the requirements shown on the plans, directed by the Engineer and these specifications. Fence, inlet siltation guards and turbidity barriers measured and paid as temporary shall be removed when no longer needed or permanent devices are installed.

Delete the first sentence of the second paragraph of Subsection 234.01 on page 177 and substitute the following:

It is understood that measurement and payment for silt fence, inlet siltation guards, and turbidity barriers will be made when a pay item is included in the proposal.

907-234.02--Materials. After the first paragraph of Subsection 234.02 on page 177, add the following:

Inlet siltation guards shall be listed on the Department's "Approved Sources of Materials".

Turbidity barriers shall be one of the following, or an approved equal.

1. SiltMax Turbidity Barrier by Dawg, Inc., 1-800-935-3294, www.dawginc.com
2. Turbidity Barrier by IWT Cargo-Guard, Inc., 1-609-971-8810, www.iwtcargoguard.com
3. Turbidity Curtain by Abasco, LLC, 1-281-214-0300, www.abasco.net

Chain link fence and hardware for super silt fence shall meet the requirements of Section 607, as applicable. Geotextile for super silt fence shall meet the requirements of Subsection 714.13 for a Type II Woven fabric.

907-234.03--Construction Requirements. After the last paragraph of Subsection 234.03.1 on page 178, add the following:

Super Silt Fence. Super silt fence shall be constructed in accordance with the plans and these specifications.

All posts shall be installed/driven so that at least 34 inches of the post will protrude above the ground. The chain link wire and geotextile shall be stretched taut and securely fastened to the posts as shown on the plans. The bottom edge of the fence and geotextile shall be buried at least eight inches below ground surface to prevent undermining. When splicing of the geotextile is necessary, the fabric shall be overlapped approximately 18 inches.

907-234.03.1.1--Placement of Inlet Siltation Guards and Turbidity Barriers. The inlet siltation guards and turbidity barriers shall be constructed at the locations shown on the erosion control plans. Inlet siltation guards and turbidity barriers shall be installed in accordance with the erosion control drawings in the plans. A copy of the manufacturer's instructions for placement of inlet siltation guards and turbidity barriers shall be provided to the Engineer prior to construction.

907-234.03.2--Maintenance and Removal. At the end of the first paragraph of Subsection 234.03.2 on page 178, add the following:

The Contractor shall maintain the inlet siltation guards. The geotextile shall be removed and replaced when deteriorated to such extent that it reduces the effectiveness of the guard. Replacement geotextile shall be the same type and manufacture as the original. Excessive accumulations against the guard shall be removed and disposed of at a location approved by the Engineer.

The Contractor shall maintain the turbidity barriers. Excessive accumulations against the turbidity barrier shall be removed and disposed of at a location approved by the Engineer.

Delete the second paragraph of Subsection 234.03.2 on page 178 and substitute the following:

Unless otherwise directed, all temporary silt fences, inlet guards and turbidity barriers shall be removed. Upon removal, the Contractor shall remove and dispose of any excess silt accumulations, shape the area to the line, grade, and cross section shown on the plans and vegetate all bare areas in accordance with the contract requirements. The temporary fence, inlet guard materials and turbidity barriers will remain the property of the Contractor and may be used at other locations provided the materials are acceptable to the Engineer.

After Subsection 234.03.2 on page 178, insert the following:

907-234.03.3--Resetting Inlet Siltation Guards and Turbidity Barriers. When inlet siltation guards and turbidity barriers are no longer needed at one location, they may be removed and reset at other needed locations. The Engineer may allow the resetting of siltation guards and turbidity barriers upon an inspection and determination that the siltation guards (frame and geotextile) and turbidity barriers are adequate for their intended purpose. When they have to be stored until needed at another location, payment for resetting will not be made until they are reset at their needed location.

907-234.04--Method of Measurement. Delete the sentence in Subsection 234.04 on page 178, add the following:

Silt fence and super silt fence will be measured by the linear foot.

Inlet siltation guard and resetting siltation guards will be measured per each. Turbidity barrier will be measured per linear foot.

907-234.05--Basis of Payment. Delete the sentence in Subsection 234.05 on page 178, add the following:

Silt fence and super silt fence, measured as prescribed above, will be paid for at the contract unit price per linear foot which shall be full compensation for completing the work.

Inlet siltation guard, resetting inlet siltation guards, and turbidity barrier, measured as prescribed above, will be paid for at the contract unit price per each or linear foot, which shall be full compensation for furnishing, constructing, and maintaining the work and for the removal and disposal of all items comprising the devices.

After the last pay item listed on page 178, add the following:

907-234-C:	Super Silt Fence	- per linear foot
907-234-D:	Inlet Siltation Guard	- per each
907-234-E:	Reset Inlet Siltation Guard	- per each
907-234-F:	Turbidity Barrier	- per linear foot

MISSISSIPPI DEPARTMENT OF TRANSPORTATION

SPECIAL PROVISION NO. 907-237-4 **CODE: (SP)**

DATE: 03/13/2012

SUBJECT: Wattles

Section 907-237, Wattles, is hereby added to and made a part of the 2004 Edition of the Mississippi Standard Specifications for Road and Bridge Construction as follows.

SECTION 907-237 - WATTLES

907-237.01--Description. This work consists of furnishing, constructing and maintaining wattles for the retention of soil around inlets, swale areas, small ditches, sediment basins and other areas as necessary. Also, the work includes removing and disposing of the wattles and silt accumulations.

Measurement and payment for wattles will be made only when a pay item is included in the bid schedule of the proposal. The quantity is estimated for bidding purposes only and will be dependent upon actual conditions which occur during construction of the project.

907-237.02--Materials. Wattles used around inlets shall have a diameter of twelve inches (12") and a length adequate to meet field conditions. Wattles used at other locations shall have a diameter of twenty inches (20") and a length adequate to meet field conditions. The minimum diameter for the above wattle sizes shall be one inch (1") less than the specified diameter.

The stakes used in securing the wattles in place shall be placed approximately three feet (3') apart throughout the length of the wattle. Stakes shall be wooden and of adequate size to stabilize the wattles to the satisfaction of the Engineer.

In addition to the requirements of this specifications, wattles shall be listed on the Department's "Approved Sources of Materials".

907-237.03--Construction Requirements.

907-237.03.1--General. The wattles shall be constructed at the locations and according to the requirements shown on the erosion control plan.

907-237.03.2--Maintenance and Removal. The Contractor shall maintain the wattles and remove and dispose of silt accumulations.

When the wattles are no longer needed, they shall be removed and the Contractor shall dispose of silt accumulations and treat the disturbed areas in accordance with the contract requirements.

907-237.04--Method of Measurement. Wattles of the size specified will be measured per linear foot.

907-237.05--Basis of Payment. Wattles, measured as prescribed above, will be paid for at the contract unit price per linear foot, which price shall be full compensation for installation, maintaining and removal of the wattles, the removal and disposal of silt accumulations and any required restoration of the disturbed areas.

Payment will be made under:

907-237-A: Wattles, Size - per linear foot

MISSISSIPPI DEPARTMENT OF TRANSPORTATION

SPECIAL PROVISION NO. 907-249-1 **CODE: (SP)**

DATE: 03/01/2011

SUBJECT: Riprap for Erosion Control

Section 907-249, Riprap for Erosion Control, is hereby added to and made a part of the 2004 Edition of the Mississippi Standard Specifications for Road and Bridge Construction as follows.

SECTION 907-249 -- RIPRAP FOR EROSION CONTROL

907-249.01--Description. Riprap for erosion control consists of furnishing and installing riprap for the purpose of temporary erosion control by intercepting and slowing the flow of sediment-laden runoff water, or for use as a temporary dam. It also includes the maintenance and removal of riprap when no longer needed.

Remove and reset riprap consists of the removal and relocation of riprap to other locations shown on the plans, directed by the Engineer, or indicated on the Contractor's Erosion Control Plan.

Riprap shall be installed in accordance with the specifications in reasonably close conformity with the locations and dimensions shown on the plans or established.

907-249.02--Materials. Stones for riprap shall be Size 100 meeting the requirements of Subsection 705.04.

907-249.03--Construction Requirements. Riprap shall be used to construct a berm/dam which will intercept sediment-laden storm water runoff from disturbed areas, create a retention pond, detain sediment, and release water in sheet flow.

The riprap installation shall be maintained in good condition by the Contractor. All necessary work and materials to maintain the integrity of the installation shall be provided until earthwork construction is complete and permanent erosion-control features are in place. The maintenance of the riprap will not be paid for separately and will be included in the cost for riprap for erosion control.

When required, existing riprap may need to be removed and reset at other locations. These locations may be for additional temporary erosion control or may be placed in permanent locations designated by the Engineer.

907-249.04--Method of Measurement. Riprap for erosion control will be measured per ton. Remove and reset riprap shall be measured per cubic yard, FM.

907-249.05--Basis of Payment. Riprap for erosion control, measured as prescribed above, will

be paid for per ton, which prices shall be full compensation for furnishing, installation, maintenance of the installation, and removal/disposal after construction has been completed; and for all labor, tools, equipment and incidentals necessary to complete the work.

Remove and reset of riprap, measured as prescribed above, will be paid for per cubic yard, which prices shall be full compensation for loading, transporting, installing, maintenance of the new installation, and removal/disposal after construction has been completed; and for all labor, tools, equipment and incidentals necessary to complete the work.

Payment will be made under:

907-249-A: Riprap for Erosion Control - per ton

907-249-B: Remove and Reset Riprap - per cubic yard

MISSISSIPPI DEPARTMENT OF TRANSPORTATION

SPECIAL PROVISION NO. 907-304-13 **CODE: (SP)**

DATE: **06/06/2012**

SUBJECT: **Granular Courses**

Section 907-304, Granular Courses, of the 2004 Edition of the Mississippi Standard Specifications for Road and Bridge Construction is hereby amended as follows.

907-304.02--Materials. After the first paragraph of Subsection 304.02.1 on page 183, add the following.

Crushed concrete meeting the requirements of Subsection 907-703.04.3 may be used in lieu of granular courses or crushed stone courses specified in the contract. This applies to base courses, shoulders, or other required construction on a prepared foundation.

907-304.03--Construction Requirements.

907-304.03.5--Shaping, Compacting and Finishing. Delete the sixth paragraph of Subsection 304.03.5 on page 185.

Delete the first table in Subsection 304.03.5 on page 186 and substitute the following.

Granular Material Class	Lot Average	Individual Test
7,8,9 or 10	97.0	93.0
5 or 6	99.0	95.0
3 or 4	100.0	96.0
1 or 2	102.0	98.0
Crushed Courses*	99.0	95.0

* When placed on filter fabric on untreated subgrade, the individual tests and the average of the five (5) tests shall equal or exceed the following values.

Lot Average	Individual Test
96.0	92.0

907-304.05--Basis of Payment. Add the "907" prefix to the pay items listed on page 187.

MISSISSIPPI DEPARTMENT OF TRANSPORTATION

SUPPLEMENT TO SPECIAL PROVISION NO. 907-401-7

DATE: 03/22/2016

SUBJECT: Asphalt Pavements

Delete subparagraph 4 of Subsection 907-401.02.6.4.1 on page 16, and substitute the following.

4. For all pavements on new construction except shoulders that are untreated, the required lot density for all lifts shall be 93.0 percent of maximum density. For all pavements on shoulders that are untreated, the required lot density for all lifts shall be 92.0 percent of maximum density.

MISSISSIPPI DEPARTMENT OF TRANSPORTATION

SPECIAL PROVISION NO. 907-401-7 **CODE: (SP)**

DATE: **12/02/2014**

SUBJECT: **Asphalt Pavements**

Section 401, Hot Mix Asphalt (HMA) - General, of the 2004 Edition of the Mississippi Standard Specifications for Road and Bridge Construction is hereby deleted and replaced as follows.

SECTION 907-401 - ASPHALT PAVEMENT -- GENERAL

907-401.01--Description. These specifications include general requirements that are applicable to all types of asphalt whether producing Hot Mix Asphalt (HMA) mixtures or Warm Mix Asphalt (WMA) mixtures. These specifications also include the specific requirements for each particular mixture when deviations from the general requirements are necessary.

This work consists of the construction of one or more lifts of asphalt pavement in accordance with these specifications and the specific requirements for the mixture to be produced and in reasonably close conformity with the lines, grades, thicknesses and typical sections shown on the plans or established by the Engineer.

907-401.01.1--Definitions.

Maximum Sieve Size - Maximum sieve size is the smallest sieve size at which 100 percent of the aggregate passes.

Nominal Maximum Sieve Size - The nominal maximum sieve size is one sieve size larger than the first sieve to retain more than 10 percent of the aggregate.

Maximum Density Line - The maximum density line is a straight line plot on the FHWA 0.45 power gradation chart which extends from the zero origin point of the chart through the plotted point of the combined aggregate gradation curve on the nominal maximum sieve size.

Mechanically Fractured Face - An angular, rough, or broken surface of an aggregate particle created by crushing as determined by ASTM Designation: D 5821.

907-401.02--Materials.

907-401.02.1--Component Materials.

907-401.02.1.1--General. Component materials will be conditionally accepted at the plant subject to later rejection if incorporated in a mixture or in work which fails to meet contract requirements.

907-401.02.1.2--Aggregates. The source of aggregates shall meet the applicable requirements of Section 703.

907-401.02.1.2.1--Coarse Aggregate Blend. Mechanically fractured faces by weight of the combined mineral aggregate coarser than the No. 4 sieve:

Mixture	Percent Fractured Faces, minimum
25-mm	70, one-face
19-mm *	80, one-face
12.5-mm	90, two-face
9.5-mm	90, two-face
4.75-mm	90, two-face

* When used on routes requiring polymer modified asphalt, the top intermediate lift (19-mm mixture), including travel lane and adjacent lane, shall have at least 90 percent two fractured faces minimum. When placed on an existing Portland Cement Concrete surface, all intermediate lifts (19-mm mixture) shall have at least 90 percent fractured two faces minimum.

The maximum percentage by weight of flat and elongated particles, for all mixes other than 4.75-mm, maximum to minimum dimension greater than 5, shall not exceed 10% for all mixtures. This shall be determined in accordance with ASTM Designation: D 4791, Section 8.4, on the combined mineral aggregate retained on the 3/8" sieve.

907-401.02.1.2.2--Fine Aggregate Blend. Of all the material passing the No. 8 sieve and retained on the No. 200 sieve, not more than 60 percent shall pass the No. 30 sieve.

Uncrushed natural sand shall pass the 3/8" sieve and may be used, excluding the content in RAP, in the percentages of the total mineral aggregate by weight set out in the following table:

Mixture	Maximum Percentage of Natural Sand by Total Weight of Mineral Aggregate		
	HT	MT	ST
25-mm	10	10	20
19-mm	10	10	20
12.5-mm	10	10	20
9.5-mm	10	10	10
4.75-mm	25	30	35

907-401.02.1.2.3--Combined Aggregate Blend.

Design Master Range

Mixture:	25-mm	19-mm	12.5-mm	9.5-mm	4.75-mm
Nominal Maximum Sieve Size:	1 inch	3/4 inch	1/2 inch	3/8 inch	1/4 inch
Sieve Size	Percent Passing				
1½ inch	100				
1 inch	90-100	100			
¾ inch	89 max.	90-100	100		
½ inch	-	89 max.	90-100	100	100
3/8 inch	-	-	89 max.	90-100	95-100
No. 4	-	-	-	89 max.	90-100
No. 8	16-50	18-55	20-60	22-70	-
No. 16	-	-	-	-	30-60
No. 200	4.0-9.0	4.0-9.0	4.0-9.0	4.0-9.0	6.0-12.0

For MT and HT mixtures, the combined aggregate gradation of the job mix formula, when plotted on FHWA 0.45 power chart paper, shall fall entirely below the Maximum Density Line on all sieve sizes smaller than the No. 4 sieve. However, MT and HT mixtures having a minimum fine aggregate angularity index of 44.0, per ASTM Designation: C1252, Method A, may be designed above the maximum density line.

The 9.5-mm mixtures shall have a minimum fine aggregate angularity of 44.0 for HT and MT mixtures and 40.0 for ST mixtures when tested on combined aggregate in accordance with ASTM Designation: C1252 Method A. The 4.75-mm mixtures shall have a minimum fine aggregate angularity of 45.0 for all design levels when tested on combined aggregate in accordance with ASTM Designation: C 1252, Method A.

The minus No. 40 fraction of the combined aggregate shall be non-plastic when tested according to AASHTO Designation: T 90. The clay content for the combined aggregate for underlying layers shall not exceed 1.0 percent, and for the top layer shall not exceed 0.5 percent by weight of the total mineral aggregate when tested according to AASHTO Designation: T 88.

907-401.02.1.3--Bituminous Materials. Bituminous materials shall meet the applicable requirements of Section 702 for the grade specified.

Tack coat shall be the same neat grade asphalt cement used in the mixture being placed or those materials specified for tack coat in Table 410-A on the last page of Section 410. Emulsified asphalt shall not be diluted without approval of the Engineer.

907-401.02.1.4--Blank.

907-401.02.1.5--Hydrated Lime. Hydrated lime shall meet the requirements of Subsection

714.03.2 for lime used in soil stabilization.

907-401.02.1.6--Asphalt Admixtures. Additives for liquid asphalt, when required or permitted, shall meet the requirements of Subsection 702.08.

907-401.02.1.7--Polymers. Polymers for use in polymer modified asphalt pavements shall meet the requirements of Subsection 702.08.3.

907-401.02.2--WMA Products and Processes. The Department will maintain a list of qualified WMA products and processes. No product or process shall be used unless it appears on this list.

The Contractor may propose other products or processes for approval by the Product Evaluation Committee. Documentation shall be provided to demonstrate laboratory performance, field performance, and construction experience.

907-401.02.3--Composition of Mixtures.

907-401.02.3.1--General. Unless otherwise specified or permitted, the asphalt shall consist of a uniform mixture of asphalt, aggregate, hydrated lime and, when required or necessary to obtain desired properties, antistripping agent and/or other materials.

The total amount of crushed limestone aggregate for mixtures, excluding shoulders, when used in the top lift, shall not exceed 50 percent of the total combined aggregate by weight.

Hydrated lime shall be used in all asphalt at the rate of one percent (1%) by weight of the total dry aggregate including aggregate in RAP, if used. The aggregate, prior to the addition of the hydrated lime, shall contain sufficient surface moisture. If necessary, the Contractor shall add moisture to the aggregate according to the procedures set out in Subsection 907-401.03.2.1.2.

The Contractor shall obtain a shipping ticket for each shipment of hydrated lime. The Contractor shall provide the District Materials Engineer with a copy of each shipping ticket from the supplier, including the date, time and weight of hydrated lime shipped and used in hot mix asphalt production. An amount equal to twenty-five percent (25%) of the total value of asphalt items performed during the initial estimate period in which the Contractor fails to submit the hydrated lime shipping tickets to the District Materials Engineer will be withheld from the Contractor's earned work. Non-conformance with this specification for successive estimate period(s) will result in the total value (100%) of asphalt items performed during this period(s) being withheld from the Contractor's earned work. Monies withheld for this non-conformance will be released for payment on the next monthly estimate following the date the submittal of hydrated lime shipping tickets to the District Materials Engineer is brought back into compliance with this specification.

Mixtures will require the addition of an antistripping agent when the Tensile Strength Ratio (MT-63) and/or the Boiling Water Test (MT-59) fail to meet the following criteria.

Tensile Strength Ratio (TSR - MT-63)
Wet Strength / Dry Strength ..... 85 percent minimum
Interior Face Coating ..... 95 percent minimum
Boiling Water Test (MT-59)
Particle Coating ..... 95 percent minimum

Reclaimed asphalt pavement (RAP) materials may be used in the production of asphalt in the percentages of the total mix by weight set out in the following table:

Asphalt Mixture	Maximum Percentage of RAP by total weight of mix
4.75-mm	0
9.5-mm	20 *
12.5-mm Surface Lift	20 *
12.5-mm Underlying Lift	30
19-mm	30
25-mm	30

* At a minimum, RAP shall be processed and/or screened such that the RAP material size does not exceed the nominal maximum sieve size for the mixture specified.

During asphalt production, the RAP shall pass through a maximum 2-inch square sieve located in the asphalt plant after the RAP cold feed bin and prior to the RAP weighing system.

Crushed reclaimed concrete pavement may be used as an aggregate component of all asphalt pavements. When crushed reclaimed concrete pavement is used as an aggregate component, controls shall be implemented to prevent segregation. Crushed reclaimed concrete pavement aggregate shall be separated into coarse and fine aggregate stockpiles using the 3/8-inch or 1/2-inch sieve as a break-point unless otherwise approved by the Engineer in writing.

907-401.02.3.1.1--Mixture Properties.

ALL MIXTURES	Percent of Maximum Specific Gravity (Gmm)
N_{Design}	96.0
$N_{Initial}$	Less than 90.0
$N_{Maximum}$	Less than 98.0

VMA CRITERIA	Minimum percent
25-mm mixture	12.0
19-mm mixture	13.0
12.5-mm mixture	14.0
9.5-mm mixture	15.0
4.75-mm mixture	16.0

Mixtures with VMA more than two percent higher than the minimum may be susceptible to

flushing and rutting; therefore, unless satisfactory experience with high VMA mixtures is available, mixtures with VMA greater than two percent above the minimum should be avoided.

The specified VFA range for 4.75-mm nominal maximum size mixtures for design traffic levels >3 million ESAL's (HT Mixtures) shall be 75 to 78 percent, for design traffic levels of 1.0 to 3 million ESAL's (MT mixtures) 65 to 78 percent, and for design traffic levels of <1.0 million ESAL's (ST mixtures) 65 to 78 percent.

DUST/BINDER RATIO for 4.75-mm mixtures
Percent Passing No.200 / Effective Binder Percent ..... 0.9 to 2.0

DUST/BINDER RATIO for 9.5-mm, 12.5-mm, 19-mm & 25-mm mixtures
Percent Passing No.200 / Effective Binder Percent ..... 0.8 to 1.6

907-401.02.3.2--Job Mix Formula. The job mix formula shall be established in accordance with Mississippi Test Method: MT-78, where N represents the number of revolutions of the gyratory compactor.

Compaction Requirements:	$N_{Initial}$	N_{Design}	$N_{Maximum}$
High Type (HT) Mixtures			
19-mm, 12.5-mm, 9.5-mm & 4.75-mm	7	85	130
Medium Type (MT) Mixtures			
19-mm, 12.5-mm, 9.5-mm & 4.75-mm	7	65	100
All Standard Type (ST) Mixtures;			
25-mm HT & MT Mixtures	6	50	75

At least 10 working days prior to the proposed use of each mixture, the Contractor shall submit in writing to the Engineer a proposed job-mix formula or request the transfer of a verified job-mix formula as set forth in the latest edition of MDOT's Field Manual for HMA and SOP TMD-11-78-00-000. The proposed job-mix formula shall indicate whether the mixture will be produced as HMA or WMA. The process or product used to produce WMA should also be noted on the proposed documentation for the job-mix formula. The job-mix formula shall be signed by a Certified Mixture Design Technician (CMDT).

The Department will perform the tests necessary for review of a proposed job-mix formula for each required mixture free of charge one time only. A charge will be made for additional job-mix formulas submitted by the Contractor for review.

Review of the proposed job-mix formula will be based on percent maximum specific gravity at $N_{Initial}$, N_{Design}, and $N_{Maximum}$, VMA @ N_{Design}, resistance to stripping, and other criteria specified for the mixture.

The mixture shall conform thereto within the range of tolerances specified for the particular

mixture. No change in properties or proportion of any component of the job-mix formula shall be made without permission of the Engineer. The job-mix formula for each mixture shall be in effect until revised in writing by the Engineer.

A job-mix formula may be transferred to other contracts in accordance with conditions set forth in the Department's Field Manual for HMA.

The Contractor shall not place any asphalt prior to receiving "tentative" approval and a MDOT design number from the Central Laboratory.

When a change in source of materials, unsatisfactory mixture production results (such as segregation, bleeding, shoving, rutting over ⅛", raveling & cracking) or changed conditions make it necessary, a new job-mix formula will be required. The conditions set out herein for the original job-mix formula are applicable to the new job-mix formula.

In the event the Contractor wishes to change from an approved HMA job-mix formula to WMA or an approved WMA job-mix formula to HMA, the Contractor shall submit the proposed change in writing to the Engineer at least 10 working days prior to the proposed change. If no changes (other than the plant production temperature) are to be made to the job-mix formula, a new MDOT design number will be assigned by the MDOT Central Laboratory.

907-401.02.4--Substitution of Mixture. The substitution of a one (1) size finer mixture for an underlying lift shall require written permission of the State Construction Engineer, except no substitution of a 4.75-mm mixture will be allowed. A 9.5-mm mixture may be substituted for the 12.5-mm mixture designated on the plans as the top lift or pre-leveling. The 19-mm mixture may be substituted for the 25-mm mixture in trench widening work. Any substitution of mixtures shall be of the same type. No other substitutions will be allowed. The quantity of substituted mixture shall be measured and paid for at the contract unit price for the mixture designated on the plans. The substitution of any mixture will be contingent on meeting the required total structure thickness and maintaining the minimum and/or maximum laying thickness for the particular substituted mixture as set out in the following table.

Mixture	Single Lift Laying Thickness Inches	
	Minimum	Maximum
25-mm	3	4
19-mm	2¼	3½
12.5-mm	1½	2½
9.5-mm	1	1½
4.75-mm	½	¾

907-401.02.5--Contractor's Quality Management Program.

907-401.02.5.1--General. The Contractor shall have full responsibility for quality management

and maintain a quality control system that will furnish reasonable assurance that the mixtures and all component materials incorporated in the work conform to contract requirements. The Contractor shall have responsibility for the initial determination and all subsequent adjustments in proportioning materials used to produce the specified mixture. Adjustments to plant operation and spreading and compaction procedures shall be made immediately when results indicate that they are necessary. Mixture produced by the Contractor without the required testing or personnel on the project shall be subject to removal and replacement by the Contractor at no additional cost to the State.

907-401.02.5.2--Personnel Requirements. The Contractor shall provide at least one Certified Asphalt Technician-I (CAT-I) full-time during asphalt production at each plant site used to furnish material to the project. Sampling shall be conducted by a certified technician or by plant personnel under the direct observation of a certified technician. All testing, data analysis and data posting will be performed by the CAT-I or by an assistant under the direct supervision of the CAT-I. The Contractor shall have a Certified Asphalt Technician-II (CAT-II) available to make any necessary process adjustments. Technician certification shall be in accordance with MDOT SOP TMD-22-10-00-000, MDOT HMA Technician Certification Program. An organizational chart, including names, telephone numbers and current certification, of all those responsible for the quality control program shall be posted in the Contractor's laboratory while the asphaltic paving work is in progress.

907-401.02.5.3--Testing Requirements. As a minimum, the Contractor's quality management program shall include the following:

(a) Bituminous Material. Provide Engineer with samples in a sealed one quart metal container at the frequency given in MDOT SOP TMD-20-04-00-000.

(b) Mechanically Fractured Face. Determine mechanically fractured face content of aggregates retained on the No. 4 sieve, at a minimum of one test per day of production.

(c) Mixture Gradation. Conduct extraction tests for gradation determination on the mixture. Sample according to the frequency in paragraph (i) and test according to Mississippi Test Method MT-31.

(d) Total Voids and VMA. Determine total voids and voids in mineral aggregate (VMA), at N_{Design}, from the results of bulk specific gravity tests on laboratory compacted specimens. Sample according to the sampling frequency in paragraph (i) and test according to the latest edition of MDOT's Field Manual for HMA.

(e) Asphalt Content. Sample according to the sampling frequency in paragraph (i). Determine the asphalt content using one of the following procedures.

(1) Nuclear gauge per Mississippi Test Method MT-6.
(2) Incinerator oven per AASHTO Designation: T 308, Method A.

(f) Stripping Tests. Conduct a minimum of one stripping test at the beginning of each job-

mix production and thereafter, at least once per each two weeks of production according to Mississippi Test Method: MT-63 and one stripping test per day of production according to Mississippi Test Method: MT-59. Should either the TSR (MT-63) or the boiling water (MT-59) stripping tests fail, a new antistrip additive or rate shall be established or other changes made immediately that will result in a mixture which conforms to the specifications; otherwise, production shall be suspended until corrections are made.

(g) Density Tests. For 25-mm, 19.5-mm, 12.5-mm & 9.5-mm mixtures, conduct density tests as necessary to control and maintain required compaction according to Mississippi Test Method: MT-16, Method C (nuclear gauge), or AASHTO Designation: T 166. Note - The nuclear gauge may be correlated, at the Contractor's option, with the average of a minimum of five pavement sample densities. For 4.75-mm mixtures, conduct density tests as necessary to control and maintain required compaction according to AASHTO Designation: T 166.

(h) Quality Control Charts. Plot the individual test data, the average of the last four tests and the control limits for the following items as a minimum:

Mixture Gradation (Percent Passing) Sieves:
1/2-inch, 3/8-inch, No. 8, No. 16, No. 30 and No. 200.
Asphalt Content, Percent
Maximum Specific Gravity, G_{mm}
Total Voids @ N_{Design}, Percent
VMA @ N_{Design}, Percent

NOTE: For 4.75-mm mixtures, Quality Control Charts for mixture gradation are not required on the No. 8 and No. 30 sieves. For 4.75-mm mixtures, as a minimum, Quality Control Charts for mixture gradation shall be kept on the 3/8-inch, No. 16 and No. 200 sieves. For all mixtures other than 4.75-mm, Quality Control Charts for mixture gradation are not required on the No. 16 sieve.

Keep charts up-to-date and posted in a readily observable location. Charts may be kept on a computer, however, the charts shall be printed out a minimum of once each production day and displayed in the laboratory. Note any process changes or adjustments on the Air Voids chart.

(i) Sampling Frequency. Conduct those tests as required above at the following frequency for each mixture produced based on the estimated plant tonnage at the beginning of the day.

Total Estimated Production, tons	Number of Tests
50-800	1
801-1700	2
1701-2700	3
2701+	4

NOTE: Material placed in a storage silo from a previous day's production shall be randomly sampled and tested when removed for placement on the roadway. Such sample(s) shall be independent of the day's production sampling frequency and shall be used in calculating the four (4) sample running average.

(j) Sample Requirements. Obtain the asphalt mixture samples from trucks at the plant. Obtain aggregate samples from cold feed bins or aggregate stockpile. Save a split portion of all mixture samples at the laboratory site in a dry and protected location for 14 calendar days. At the completion of the project, the remaining samples may be disposed of with the approval of the Engineer.

The above testing frequencies are for the estimated plant production for the day. If production is discontinued or interrupted, the tests will be conducted at the previously established sample tonnage points for the materials that are actually produced. If the production exceeds the estimated tonnage, sampling and testing will continue at the testing increments previously established for the day. A testing increment is defined as the estimated daily tonnage divided by the required number of tests from the table in Subsection 907-401.02.5.3 paragraph (i).

In addition to the above program, the following tests shall be conducted on the first day of production and once for every eight production samples thereafter, with a minimum of one test per production week.

Aggregate Stockpile Gradations per AASHTO Designations: T-11 and T-27.

Reclaimed Asphalt Pavement (RAP) Gradation per Mississippi Test Method MT-31.

Fine Aggregate Angularity for all 4.75-mm and 9.5-mm mixtures and all MT and HT mixtures designed above the maximum density line per ASTM Designation: C 1252, Method A.

Testing of the aggregate and RAP stockpiles during production will be waived provided the Contractor provides the Engineer with gradation test results for the materials in the stockpile determined during the building of the stockpiles. The test results provided shall represent a minimum frequency of one per one thousand tons of material in the stockpile. If the Contractor continues to add materials to the stockpile during asphalt production, the requirements for gradation testing during production are not waived.

907-401.02.5.4--Documentation. The Contractor shall document all observations, records of inspection, adjustments to the mixture, and test results on a daily basis. All tests conducted by the Contractor in accordance with Subsection 907-401.02.5.3(h) shall be included in the running average calculations. If single tests are performed as a check on individual asphalt properties, between regular samples, without performing all tests required in Subsection 907-401.02.5.3(h), the results of those individual tests shall not be included in the running average calculations for that particular property. The Contractor shall record the results of observations and records of inspection as they occur in a permanent field record. The Contractor shall record all process

adjustments and job mix formula (JMF) changes on the air void charts. The Contractor shall provide copies of all test data sheets and the daily summary reports on the appropriate Mississippi DOT forms to the Engineer on a daily basis. The Contractor shall provide a written description of any process change, including blend proportions, to the Engineer as they occur. Information provided to the Engineer must be received in the Engineer's office by no later than 9:00 AM the day after the asphalt is produced. Fourteen days after the completion of the placement of the asphalt, the Contractor shall provide the Engineer with the original testing records and control charts in a neat and orderly manner.

907-401.02.5.5--Control Limits. The following control limits for the job mix formula (JMF) and warning limits are based on a running average of the last four data points.

Item	JMF Limits	Warning Limits
Sieve - % Passing		
1/2-inch	± 5.5	± 4.0
3/8-inch	± 5.5	± 4.0
No. 8	± 5.0	± 4.0
No. 16, for 4.75-mm mixtures ONLY	± 4.0	± 3.0
No. 30	± 4.0	± 3.0
No. 200	± 1.5	± 1.0
Asphalt Content, %	-0.3 to +0.5	-0.2 to + 0.4
Total Voids @ N_{Design}, %	± 1.3	± 1.0
VMA @ N_{Design}, %	– 1.5	– 1.0

907-401.02.5.6--Warning Bands. Warning bands are defined as the area between the JMF limits and the warning limits.

907-401.02.5.7--Job Mix Formula Adjustments. A request for a JMF adjustment signed by a CAT-II may be made to the Engineer by the Contractor. Submit sufficient testing data with the request to justify the change. The requested change will be reviewed by the State Materials Engineer for the Department. If current production values meet the mixture design requirements, a revised JMF will be issued. Adjustments to the JMF shall conform to the latest edition of MDOT's Field Manual for HMA. Adjustments to the JMF to conform to actual production shall not exceed the tolerances specified for the JMF limits. Regardless of such tolerances, any adjusted JMF gradation shall be within the design master range for the mixture specified. The JMF asphalt content may only be reduced if the production VMA meets or exceeds the minimum design VMA requirements for the mixture being produced.

907-401.02.5.8--Actions and Adjustments. Based on the process control test results for any property in question, the following actions shall be taken or adjustments made when appropriate:

(a) When the running average trends toward the warning limits, the Contractor shall consider taking corrective action. The corrective action, if any, shall be documented. All tests shall be part of the contract files and shall be included in the running average

calculations.

(b) The Contractor shall notify the Engineer whenever the running average exceeds the warning limits.

(c) If two consecutive running averages exceed the warning limit, the Contractor shall stop production and make adjustments. Production shall only be restarted after notifying the Engineer of the adjustments made.

(d) If the adjustment made under (c) improves the process such that the running average after four additional tests is within the warning limits, the Contractor may continue production with no reduction in payment.

(e) If the adjustment made under (c) does not improve the process and the running average after four additional tests stays in the warning band, the mixture will be considered unsatisfactory. Reduced payment for unsatisfactory mixtures will be applied starting from the stop point to the point when the running average is back within the warning limits in accordance with Subsection 907-401.02.6.3.

(f) Failure to stop production and make adjustments when required shall subject all mixture produced from the stop point to the point when the running average is back within the warning limits to be considered unsatisfactory. Reduced payment for unsatisfactory mixtures will be applied in accordance with Subsection 907-401.02.6.3.

(g) If the running average exceeds the JMF limits, the Contractor shall stop production and make adjustments. Production shall only be restarted after notifying the Engineer of the adjustments made.

(h) All materials for which the running average exceeds the JMF limits will be considered unacceptable and shall be removed and replaced by the Contractor at no additional cost to the State. The Engineer will determine the quantity of material to be replaced based on a review of the individual testing data which make up the running average in question and an inspection of the completed pavement. If the Engineer decides to leave the mixture in place because of special circumstances, the quantity of mixture, as defined above, will be paid for in accordance with Subsection 907-401.02.6.3.

(i) Single test results shall be compared to 1.7 times the warning and JMF limits. If the test results verified by QA testing (within allowable differences in Subsection 907-401.02.6.2) exceed these limits, the pay factor provided in Subsection 907-401.02.6.3 will apply for the quantity of material represented by the test(s). Single test limits will be used for the acceptance of projects when insufficient tonnage is produced to require four (4) Contractor's tests.

(j) The above corrective action will also apply for a mixture when the Contractor's testing data has been proven incorrect. The Contractor's data will be considered incorrect when; 1) the Contractor's tests and the Engineer's tests do not agree within the allowable differences given in Subsection 907-401.02.6.2 and the difference can not be resolved, or 2) the Engineer's tests indicates that production is outside the JMF limits and the results have been verified by the Materials Division. The Engineer's data will be used in place of the Contractor's data to determine the appropriate pay factor.

907-401.02.6--Standards of Acceptance.

907-401.02.6.1--General. Acceptance for mixture quality (VMA and total voids @ N_{Design}, gradation, and asphalt content) will be based on random samples tested in accordance with the

latest edition of MDOT's Field Manual for HMA. Pavement densities and smoothness will be accepted by lots as set out in Subsections 907-401.02.6.4 and 907-401.02.6.5.

907-401.02.6.2--Assurance Program for Mixture Quality. The Engineer will conduct a quality assurance program. The quality assurance program will be accomplished as follows:

1) Conducting verification tests.
2) Validate Contractor test results.
3) Periodically observing Contractor quality control sampling and testing.
4) Monitoring required quality control charts and test results.
5) Sampling and testing materials at any time and at any point in the production or laydown process.

The rounding of all test results will be in accordance with Subsection 700.04.

The Engineer will conduct verification tests on samples taken by the Contractor under the direct supervision of the Engineer at a time specified by the Engineer. The frequency will be equal to or greater than ten percent (10%) of the tests required for Contractor quality control and the data will be provided to the Contractor within two asphalt mixture production days after the sample has been obtained by the Engineer. At least one sample shall be tested from the first two days of production. All testing and data analysis shall be performed by a Certified Asphalt Technician-I (CAT-I) or by an assistant under the direct supervision of the CAT-I. Certification shall be in accordance with the *MDOT HMA Technician Certification Program* chapter in the Materials Division Inspection, Testing, and Certification Manual. The Department shall post a chart giving the names and telephone numbers for the personnel responsible for the assurance program.

The Engineer shall be allowed to inspect Contractor testing equipment and equipment calibration records to confirm both calibration and condition. The Contractor shall calibrate and correlate all testing equipment in accordance with the latest versions of the Department's Test Methods and AASHTO Designation: R 18.

Random differences between the Engineer's verification tests and the current running average of four quality control tests at the time of obtaining the verification sample will be considered acceptable if within the following limits:

Item	Allowable Differences
Sieve - % Passing	
3/8-inch and above	6.0
No. 4	5.0
No. 8	4.0
No. 16, for 4.75-mm mixtures ONLY	3.5
No. 30	3.5
No. 200	2.0
AC Content	0.4
Specimen Bulk SG, Gmb @ N_{Design}	0.030
Maximum SG, Gmm	0.020

If four quality control tests have not been tested prior to the time of the first verification test, the verification test results will be compared to the average of the preceding quality control tests. If the verification test is the first material tested on the project or if a significant process adjustment was made just prior to the verification test, the verification test results will be compared to the average of four subsequent quality control test results. For all other cases after a significant process adjustment, the verification test results will be compared to the average of the preceding quality control tests (taken after the adjustment) as in the case of a new project start-up when four quality control tests are not available.

In the event that; 1) the comparison of the Contractor's running average quality control data and Engineer's quality assurance verification test results are outside the allowable differences in the above table, or 2) if a bias exists between the results, such that one of the results is predominately higher or lower than the other, and the Engineer's results fail to meet the JMF control limits, the Engineer will investigate the reason immediately. As soon as the need for an investigation becomes known, the Engineer will increase the quality assurance sampling rate to the same frequency required for Contractor testing. The additional samples obtained by the Engineer may be used as part of the investigation process or for routine quality assurance verification tests. The Engineer's investigation may include testing of the remaining quality control split samples, review and observation of the Contractor's testing procedures and equipment, and a comparison of split sample test results by the Contractor quality control laboratory, Department quality assurance laboratory and the Materials Division laboratory. The procedures outlined in the latest edition of MDOT's Field Manual for HMA may be used as a guide for the investigation. In the event that the Contractor's results are determined to be incorrect, the Engineer's results will be used for the quality control data and the appropriate payment for the mixture will be based on the procedures specified in Subsection 907-401.02.5.8(j).

The Engineer will periodically witness the sampling and testing being performed by the Contractor. The Engineer, both verbally and in writing, will promptly notify the Contractor of any observed deficiencies. When differences exist between the Contractor and the Engineer which cannot be resolved, a decision will be made by the State Materials Engineer, acting as the referee. The Contractor will be promptly notified in writing of the decision. If the deficiencies are not corrected,

the Engineer will stop production until corrective action is taken.

907-401.02.6.3--Acceptance Procedure for Mixture Quality. All obviously defective material or mixture will be subject to rejection by the Engineer. Such defective material or mixture shall not be incorporated into the finished work. If the defective material has already been placed in the work, the material shall be removed and replaced at no additional cost to the State.

The Engineer will base final acceptance of the asphalt mixture production on the results of the Contractor's testing for total voids and VMA @ N_{Design}, gradation, and asphalt content as verified by the Engineer in the manner hereinbefore described and the uniformity and condition of the completed pavement. Areas of pavement that exhibit non-uniformity or failures, materials or construction related, such as but not limited to segregation, bleeding, shoving, rutting over ⅛", raveling, slippage, or cracking will not be accepted. Such areas will be removed and replaced at no additional cost to the State.

Bituminous mixture placed prior to correction for deficiencies in VMA and total voids @ N_{Design}, gradation, or asphalt content, as required in Subsection 907-401.02.5.8 and determined by the Engineer satisfactory to remain in place will be paid for in accordance with the following pay factors times the contract unit price per ton.

Pay Factor for Mixture Quality *

Item	Produced in Warning Bands	Produced Outside JMF Limits, Allowed to Remain in Place
Gradation	0.90	0.75
Asphalt Content	0.85	0.75
Total Voids @ N_{Design}	0.70	0.50
VMA @ N_{Design}	0.90	0.75

* The minimum single payment will apply.

907-401.02.6.4--Acceptance Procedure for Density. Each completed lift will be accepted with respect to compaction on a lot to lot basis from density tests performed by the Department. For normal production days, divide the production into approximately equal lots as shown in the following table. When cores are being used for the compaction evaluation, randomly obtain one core from each lot. When the nuclear density gauge is being used for compaction evaluation, obtain two random readings from each lot and average the results. See Chapter 7 of the latest edition of MDOT's Field Manual for HMA for more details. Additional tests may be required by the Engineer to determine acceptance of work appearing deficient. The Contractor shall furnish and maintain traffic control for all compaction evaluations, including coring, required in satisfying specified density requirements.

Lot Determination

Daily Production - Tons	Number of Lots
0 - 300	1
301 - 600	2
601 - 1000	3
1001 - 1500	4
1501 - 2100	5
2101 - 2800	6
2801+	7

907-401.02.6.4.1--Roadway Density. The density requirement for each completed lift on a lot to lot basis from density tests performed by the Department shall be as follows:

1. For all leveling lifts, when full lane width and with a thickness as specified in the table in Subsection 907-401.02.4, the required lot density shall be 92.0 percent of maximum density.

2. For all single lift overlays, with or without leveling and/or milling, the required lot density shall be 92.0 percent of maximum density.

3. For all multiple lift overlays of two (2) or more lifts excluding leveling lifts, the required lot density of the bottom lift shall be 92.0 percent of maximum density. The required lot density for all subsequent lifts shall be 93.0 percent of maximum density.

4. For all pavements on new construction, the required lot density for all lifts shall be 93.0 percent of maximum density.

When it is determined that the density for a lot is below the required density (93.0 percent or 92.0 percent) but not lower than 91.0 or 90.0 percent of maximum density, respectively, the Contractor will have the right to remove and replace the lot(s) not meeting the specified density requirements in lieu of accepting reduced payment for the lot(s).

When it is determined that the density for a lot is above 96.0 percent, the Engineer shall notify the Contractor who will make plant adjustments to resolve the problem.

When it is determined that the density for a lot is below 91.0 or 90.0 percent, respectively, the lot(s), or portions thereof shall be removed and replaced in accordance with Chapter 7 of the latest edition of MDOT's Field Manual for HMA at no additional cost to the State. A corrected lot will be retested for approval. No resampling will be performed when pavement samples are used for determining density.

At any time the average daily compaction (the total of the percent compaction for the lots produced in one day divided by the total number of lots for the day) does not meet the required percent compaction or more for two consecutive days, the Contractor shall notify the Engineer of proposed changes to the compactive effort. If the average daily compaction does not meet the

required percent compaction or more for a third consecutive day, the Contractor shall stop production until compaction procedures are established to meet the specified density requirements.

Each lot of work found not to meet the density requirement of 92.0% or 93% of maximum density, respectively, may remain in place with a reduction in payment as set out in the following tables:

PAYMENT SCHEDULE FOR COMPACTION OF 92.0 PERCENT OF MAXIMUM DENSITY

Pay Factor	Lot Density ** % of Maximum Density
1.00	92.0 and above
0.90	91.0 - 91.9
0.70	90.0 - 90.9

** Any lot or portion thereof with a density of less than 90.0 percent of maximum density shall be removed and replaced at no additional cost to the State.

PAYMENT SCHEDULE FOR COMPACTION OF 93.0 PERCENT OF MAXIMUM DENSITY

Pay Factor	Lot Density *** % of Maximum Density
1.00	93.0 and above
0.90	92.0 - 92.9
0.70	91.0 - 91.9

*** Any lot or portion thereof with a density of less than 91.0 percent of maximum density shall be removed and replaced at no additional cost to the State.

The compaction pay factors and mixture quality pay factor, as described in Subsection 907-401.02.6.3, will each apply separately. However, the combined pay factor shall not be less than 0.50 for any mixture allowed to remain in place.

907-401.02.6.4.2--Trench Widening Density. The density for trench widening on a lot to lot basis shall be determined from density tests performed by the Department using pavement samples (cores).

When it is determined that the density for a trench widening lot is below 89.0 percent but not lower than 88.0 percent of maximum density, the Contractor will have the right to remove and replace the lot(s) not meeting the specified density requirements in lieu of accepting reduced payment for the lot(s).

When it is determined that the density for a trench widening lot is above 95.0 percent, the Engineer shall notify the Contractor who will make plant adjustments to resolve the problem.

When it is determined that the density for a trench widening lot is below 88.0 percent, the lot(s), or portions thereof shall be removed and replaced in accordance with Chapter 7 of the latest edition of MDOT's Field Manual for HMA at no additional cost to the State. A corrected lot will be retested for approval. No resampling will be performed when pavement samples are used for determining density.

At any time the daily compaction (the total of the percent compaction for the lots produced in one day divided by the total number of lots for the day) does not meet 89.0 percent compaction or more for two consecutive days, the Contractor shall notify the Engineer of proposed changes to the compactive effort. If the average daily compaction does not meet 89.0 percent compaction or more for a third consecutive day, the Contractor shall stop production until compaction procedures are established to meet the specified density requirement.

Each lot of trench widening work found not to meet the density requirement of 91.0 percent of maximum density may remain in place with a reduction in payment as set out in the following table:

PAYMENT SCHEDULE FOR COMPACTION
TRENCH WIDENING WORK

Pay Factor	Lot Density *** % of Maximum Density
1.00	89.0 and above
0.50	88.0 - 88.9

*** Any lot or portion thereof with a density of less than 88.0 percent of maximum density shall be removed and replaced at no additional cost to the State.

The compaction pay factors and mixture quality pay factor, as described in Subsection 907-401.02.6.3, will each apply separately. However, the combined pay factor shall not be less than 0.50 for any mixture allowed to remain in place.

907-401.02.6.5--Blank.

907-401.02.6.6--Blank.

907-401.02.6.7--Surface Correction. Corrective work to sections exceeding short continuous interval thresholds reported by ProVal, as described in Subsection 907-403.03.2.1, shall consist of diamond grinding in accordance with these specifications or methods approved by the Engineer. All surface areas corrected by grinding shall be sealed with a sealant approved by the Engineer.

907-401.02.6.7.1--Diamond Grinding. Grinding of asphalt surfaces shall consist of diamond

grinding the existing asphalt pavement surface to remove surface distortions to achieve the specified surface smoothness requirements.

907-401.02.6.7.2--Equipment. The grinding equipment shall be a power driven, self-propelled machine that is specifically designed to smooth and texture pavement surfaces with diamond blades. The effective wheel base of the machine shall not be less than 12.0 feet. It shall have a set of pivoting tandem bogey wheels at the front of the machine and the rear wheels shall be arranged to travel in the track of the fresh cut pavement. The center of the grinding head shall be no further than 3.0 feet forward from the center of the back wheels.

The equipment shall be of a size that will cut or plane at least two feet (2') wide. It shall also be of a shape and dimension that does not encroach on traffic movement outside of the work area. The equipment shall be capable of grinding the surface without causing spalls at joints, or other locations.

907-401.02.6.7.3--Construction. The construction operation shall be scheduled and proceed in a manner that produces a uniform finish surface. Grinding will be accomplished in a manner to provide positive lateral drainage by maintaining a constant cross-slope between grinding extremities in each lane.

The operation shall result in pavement that conforms to the typical cross-section and the requirements specified in Subsection 907-401.02.6.7.4. It is the intent of this specification that the surface smoothness characteristics be within the limits specified.

The Contractor shall establish positive means for removal of grinding residue. Solid residue shall be removed from pavement surfaces before it is blown by traffic action or wind. Residue shall not be permitted to flow across lanes used by public traffic or into gutters or drainage facilities, but may be allowed to flow into adjacent ditches.

907-401.02.6.7.4--Finished Pavement Surface. The grinding process shall produce a pavement surface that is smooth and uniform in appearance with a longitudinal line type texture. The line type texture shall contain parallel longitudinal corrugations that present a narrow ridge corduroy type appearance. The peaks of the ridges shall not be more than 1/16 inch higher than the bottoms of the grooves.

The finished pavement surface will be measured for riding quality. The grinding shall produce a riding surface which does not exceed either the specified profile index or the specified bump and dip limit.

907-401.02.6.8--Acceptance Procedure for Pavement Smoothness Using Mean Roughness Index (MRI). When compaction is completed, the lift shall have a uniform surface and be in reasonably close conformity with the line, grade and cross section shown on the plans.

The smoothness of the surface lift will be determined by using an Inertial Profiling System (IPS) to measure and record roughness data in each designated location. Roughness data for each longitudinal profile will be reported as a Mean Roughness Index (MRI). MRI is calculated by

averaging the International Roughness Index (IRI) values from the two individual wheelpath profiles. The surface shall be tested and corrected to a smoothness index as described herein with the exception of those locations or specific projects that are excluded from smoothness testing with an IPS.

The smoothness of the surface lift will be determined for traffic lanes, auxiliary lanes, climbing lane and two-way turn lanes. Areas excluded from a smoothness test with the IPS are acceleration and deceleration lanes, tapered sections, transition sections for width, shoulders, crossovers, ramps, side street returns, etc. The roadway pavement on bridge replacement projects having 1,000 feet or less of pavement on each side of the structure will be excluded from a smoothness test. Pavement on horizontal curves having a radius of less than 1,000 feet at the centerline and pavement within the super elevation transition of such curves are excluded from smoothness testing. Smoothness testing shall terminate 264 feet from each transverse joint that separates the pavement from a bridge deck, bridge approach slab or existing pavement not constructed under the contract. This shall apply to any other exceptions including, but not limited to, railroad crossings and manholes. Segments containing a considerable amount of encroachments such as intersections, manholes, curb and gutter sections, etc. may be excluded at the Project Engineer's discretion.

Initial smoothness measurements shall take place no more than 72 hours following placement of surface and must be performed at the posted speed limit or 50 miles per hour (±5 mile per hour), whichever is lower. This speed requirement will be waived for all lightweight profilers. Measurements will be made in both wheel paths of exterior and interior lanes. The wheel paths shall be designated as being located three feet (3') and nine feet (9') from centerline or longitudinal joint, respectively. Beginning and ending latitude and longitude coordinates shall be required on each smoothness surface test. Testing will also be required on sections that have been surface corrected. No smoothness testing shall be performed when there is moisture of any kind on the pavement surface. Any additional testing shall meet the requirements of Subsection 907-403.03.2.

The surface lift will be accepted on a continuous interval basis for pavement smoothness. Continuous reporting is based upon all MRI values for a specified running interval. These values are averaged and presented at the midpoint of the specified running interval. The last 15 feet of a day's lift may not be obtainable until the lift is continued and for this reason may be included in the subsequent section.

Areas of localized roughness exceeding the continuous 25-foot interval threshold described in Subsection 907-403.03.2.1 shall be corrected regardless of the 528-foot interval MRI value of the section. Surface correction by grinding shall be performed in accordance with Subsection 907-401.02.6.7. The Contractor shall also make other necessary surface corrections to ensure that the final mean roughness index of the section meets the requirements of Subsection 907-403.03.2.

Continuous sections exceeding the accepted long interval MRI value shall be corrected as specified in Subsection 403.03.4. All such corrections shall be performed at no additional costs to the State. Scheduling and traffic control will be the responsibility of the Contractor with

approval of the Engineer. All tests and corrections shall be in accordance with AASHTO R 54-10, Accepting Pavement Ride Quality When Measured Using Inertial Profiling Systems.

907-401.02.6.9--High Speed Inertial Profiling System.

907-401.02.6.9.1--General. The IPS, furnished and operated by the Contractor under the supervision of the Engineer or the Engineer's representative, shall be a dual laser high speed or lightweight vehicle meeting the requirements of AASHTO M 328-10, Standard Specification for Inertial Profiler.

907-401.02.6.9.2--Mechanical Requirements. The IPS should function independent of vehicle suspension and speed with an operational range of 15-70 mph (for high speed profilers only) and must collect data at a sample interval of no more than three inches (3"). All IPSs, operators, and combinations thereof shall be verified in accordance with AASHTO R 56-10, Standard Practice for Certification of Inertial Profiler Systems and AASHTO R 57-10, Operating Inertial Profiler Systems.

907-401.02.6.9.3--Computer Requirements. The computer measurement program must be menu driven, Windows compatible, and able to produce unfiltered profiler runs in any one of the following file formats: University of Michigan's Transportation Research Institute's (UMTRI) Engineering Research Division (*.erd) file, ProVAL's Pavement Profile (*.ppf) file, or Ames Engineering's (*.adf) file format. The computer shall have the ability to display and print data on site for verification and shall have the ability to save and transfer data via Universal Serial Bus (USB) flash drive, which shall be provided by the Contractor.

All profiler runs must be named in the following format for acceptance by the Project Engineer:

- County_Route_Direction_Lane_BeginStation_EndStation

In addition to manufacturers software; the latest version of FHWA's ProVAL software shall be installed on the IPS computer. ProVAL software is available for free download at http://www.roadprofile.com.

907-401.02.7--Nuclear Gauges.

907-401.02.7.1--Nuclear Moisture-Density Gauge. The nuclear gauge unit used to monitor density shall contain a full data processor which holds all calibration constants necessary to compute and directly display wet density, moisture, and dry density in pounds per cubic foot. The data processor shall compute and display the percent moisture and percent density based on dry weight.

907-401.02.7.2--Nuclear Asphalt Content Gauge. The Contractor shall furnish and calibrate, unless designated otherwise in the contract, a Troxler Nuclear Asphalt Content Gauge Model 3241 or updated model, or a Campbell Nuclear Asphalt Content Gauge Model AC-2 or an approved equal.

907-401.03--Construction Requirements. Mississippi DOT has adopted the "Hot-Mix Asphalt

Paving Handbook" as the guideline for acceptable asphalt construction practices.

907-401.03.1--Specific Requirements.

907-401.03.1.1--Weather Limitations - General. The mixture shall not be placed when weather conditions prevent the proper handling and finishing or the surface on which it is to be placed is wet or frozen.

When paving operations are discontinued because of rain, the mixture in transit shall be protected until the rain ceases. The surface on which the mixture is to be placed shall be swept to remove as much moisture as possible and the mixture may then be placed subject to removal and replacement at no additional cost to the State if contract requirements are not met.

907-401.03.1.1.1--Weather Limitations For HMA. At the time of placement, the air and pavement surface temperature limitations shall be equal to or exceed that specified in the following table.

TEMPERATURE LIMITATIONS

Compacted Thickness	Temperature
Less than 1½ inches	55°F
1½ inches to 2 inches	50°F
2¼ inches to 3 inches	45°F
Greater than 3 inches	40°F

907-401.03.1.1.2--Weather Limitations For WMA. The air and pavement temperature at the time of placement shall equal or exceed 40ºF, regardless of compacted lift thickness.

907-401.03.1.2--Tack Coat. Tack coat shall be applied to previously placed asphalt and between lifts, unless otherwise directed by the Engineer. Tack coat shall be applied with a distributor spray bar. A hand wand will only be allowed for applying tack coat on ramp pads, irregular shoulder areas, median crossovers, turnouts, or other irregular areas. Bituminous materials and application rates for tack coat shall be as specified in Table 410-A on page 293. Construction requirements shall be in accordance with Subsection 407.03 of the Standard Specifications.

907-401.03.1.3--Blank.

907-401.03.1.4--Density. The lot density for all dense graded pavement lifts, except as provided below for preleveling, wedging [less than fifty percent (50%) of width greater than minimum lift thickness], ramp pads, irregular shoulder areas, median crossovers, turnouts, or other areas where the established rolling pattern cannot be performed, shall not be less than the specified percent (92.0% or 93.0%) of the maximum density based on AASHTO Designation: T 209 for the day's production. For all leveling lifts, when full lane width and with a thickness as specified in the table in Subsection 907-401.02.4, the required lot density shall be 92.0 percent of maximum

density. If a job-mix formula adjustment is made during the day which affects the maximum specific gravity, calculate a new average maximum density for the lot(s) placed after the change.

Pavement core samples obtained for determining density which has a thickness less than two times the maximum size aggregate permitted by the job-mix formula will not be used as a representative sample.

Preleveling, wedging (less than fifty percent of width greater than minimum lift thickness), ramp pads, irregular shoulder areas, median crossovers, turnouts, and other areas where an established rolling pattern cannot be obtained shall be compacted to refusal densification.

907-401.03.2--Bituminous Mixing Plants.

907-401.03.2.1--Plant Requirements.

907-401.03.2.1.1--Cold Aggregate Storage. The cold storage for hydrated lime shall be a separate bulk storage bin with a vane feeder or other approved feeder system which can readily be calibrated. The system shall provide a means for easy sampling of the hydrated lime additive and verifying the quantity of lime dispensed. The feeder system shall require a totalizer.

The hydrated lime additive equipment shall be interlocked and synchronized with the cold feed controls to operate concurrently with the cold feed operation which will automatically adjust the hydrated lime feed to variations in the cold aggregate feed. A positive signal system shall be installed which will automatically shut the plant down when malfunctions cause an improper supply of hydrated lime or water.

The plant shall not operate unless the entire hydrated lime system is functioning properly.

907-401.03.2.1.2--Cold Aggregate Feed. The hydrated lime shall be dispensed dry or as a slurry directly onto the composite aggregate between the cold feed and the dryer. The slurry shall consist of 1 part hydrated lime to 3 parts water.

When hydrated lime is introduced dry, a spray bar or other approved system capable of spraying all aggregate with water shall be installed in order to maintain all aggregate at the moisture condition set out in Subsection 907-401.02.3.1 prior to addition of the hydrated lime. An alternate system for spraying the coarse aggregate stockpiles may be allowed when approved by the Engineer. The approved equipment and methods shall consistently maintain the aggregate in a uniform, surface wet condition. The moisture content of the aggregate-hydrated lime mixture, following spraying and mixing, shall be introduced into the automatic moisture controls of the plant.

The aggregate-hydrated lime mixture shall be uniformly blended by some mechanical means such as a motorized "on the belt" mixer or pug mill located between the cold feed and the dryer. Other mixing devices may be used subject to approval by the Engineer.

A maximum of forty five (45) percent of the total aggregate blend may be fed through any single

cold feed bin. If the JMF calls for more than forty five (45) percent of a specific aggregate, that aggregate must be fed through two (2) or more separate cold feed bins.

907-401.03.2.1.3--Dryer. The efficiency of drying aggregates shall be such that the moisture content of the top asphalt mixture shall not exceed 0.50 percent by weight of the total mixture, and the moisture content of all the underlying mixtures shall not exceed 0.75 percent by weight of the total mixture being produced.

907-401.03.2.1.4--Blank.

907-401.03.2.1.5--Control of Bituminous Material and Antistripping Agent. Specified bituminous materials from different manufacturers or from different refineries of a single manufacturer shall not be mixed in the plant's asphalt cement supply system storage tank and used in the work without prior written approval of the Engineer. Approval is contingent upon the Engineer's receipt of three copies of the manufacturer's certified test report(s) from the Contractor showing that the bituminous material blend conforms to the specifications.

A satisfactory method of weighing or metering shall be provided to ensure the specified quantity of bituminous material. Provisions shall be provided for checking the quantity or rate of flow. Weighing or metering devices shall be accurate within plus or minus one-half percent.

The antistripping agent shall be injected into the bituminous material immediately prior to the mixing operation with an approved in-line injector system capable of being calibrated so as to ensure the prescribed dosage.

An in-line spigot for sampling of asphalt shall be located between the asphalt storage tank and the antistripping agent in-line injector.

907-401.03.2.1.6--Thermometric Equipment. An armored thermometer of adequate range and calibrated in 5°F increments shall be fixed at a suitable location in the bituminous line near the charging valve of the mixer unit.

The plant shall be equipped with an approved dial-scale, mercury-actuated thermometer, pyrometer or other approved thermometric instrument placed at the discharge chute of the dryer to measure the temperature of the material.

When the temperature control is unsatisfactory, the Engineer may require an approved temperature-recording apparatus for better regulation of the temperature.

907-401.03.2.1.7--Screens. A scalping screen shall be used.

907-401.03.2.1.8--Dust Collector. The plant shall be equipped with a dust collector constructed to waste or return collected material. When collected material is returned, it shall be returned through a controlling device which will provide a uniform flow of material into the aggregate mixture.

907-401.03.2.1.9--Safety Requirements. A platform or other suitable device shall be provided so the Engineer will have access to the truck bodies for sampling and mixture temperature data.

907-401.03.2.1.10--Blank.

907-401.03.2.1.11--Truck Scales. The specifications, tolerances and regulations for commercial weighing and measuring devices as recommended by the National Bureau of Standards [National Institute of Standards and Technology (NIST) Handbook 44] shall govern truck scales used in the State of Mississippi, except weighing devices with a capacity of ten thousand (10,000) pounds or more used to weigh road construction materials (i.e. sand, gravel, asphalt, fill dirt, topsoil and concrete) shall have a tolerance of one-half of one percent (1/2 of 1%) in lieu of the requirements of Handbook 44 and shall be regulated by the Mississippi Department of Transportation.

Scales shall be checked and certified by a scale company certified in heavy truck weights by the Mississippi Department of Agriculture and Commerce. In the case of scales used for measurement of materials on Department of Transportation projects, certification shall be performed in the presence of an authorized representative of the Department or a copy of the certification may be furnished for scales that have been checked and certified within the last six months for use on other Department of Transportation projects and are still in the position where previously tested. Scales that have not been checked and certified under NIST Handbook 44 guidelines, except for the herein modified tolerances allowed, shall be so checked and certified prior to use for measurement of materials on Department of Transportation projects. Tests shall be continued on six month intervals with the test conducted in the presence of an authorized representative of the Department.

Truck scales shall be accurate to one-half of one percent of the applied load, shall be sensitive to 20 pounds, and shall have a graduation of not more than 20 pounds.

The Contractor may use an electronic weighing system approved by the Engineer in lieu of truck scales. The system shall be equipped with an automatic print out system which will print a ticket for each load with the following information:

> MDOT, Contractor's name, project number, county, ticket number, load number, pay item number, item description of the material delivered, date, time of day, haul vehicle number, gross weight, tare weight, net weight and total daily net weight.

When approved by the Engineer and materials are measured directly from a storage bin equipped with load cells, exceptions may be made to the gross and tare weight requirements.

The ticket shall also have a place for recording the temperature of asphalt mixtures, if applicable, and the signatures of MDOT's plant and roadway inspectors. The load numbers for each project shall begin with load number one (1) for the first load of the day and shall be numbered consecutively without a break until the last load of the day. The Contractor shall provide MDOT with an original and one copy of each ticket. When the ticket information provided by the Contractor proves to be unsatisfactory, MDOT will use imprinter(s) and imprinter tickets to

record load information. All recorded weights shall be in pounds and shall be accurate to within one-half of one percent of the true weight, and the system shall be sensitive to 20 pounds. The Engineer will require random loads to be checked on certified platform scales at no cost to the Department.

When an electronic weighing system utilizes the plant scales of a batch plant, the system may be used only in conjunction with a fully automatic batching and control system.

907-401.03.2.2--Additional Requirements for Batching Plants.

907-401.03.2.2.1--Plant Scales. The plant batch scale weight shall not exceed the platform scale weight by more than one percent (1.0%).

907-401.03.2.3--Additional Requirements for Drum Mixing Plants.

907-401.03.2.3.1--Plant Controls. The plant shall be operated with all the automatic controls as designed and provided by the plant manufacturer. If the automatic controls malfunction, brief periods of manual operations to complete the day's work or to protect the work already placed may be conducted with the approval of the Engineer. During manual operation, the Contractor must continue to produce a uniform mixture meeting all contract requirements.

907-401.03.2.3.2--Aggregate Handling and Proportioning. A screening unit shall be placed between the bins and the mixer to remove oversized aggregate, roots, clayballs, etc.

907-401.03.2.4--Surge or Storage Bins. Surge and/or storage systems may be used at the option of the Contractor provided each system is approved by the Department prior to use. Surge bins shall be emptied at the end of each day's operation. Storage silos may be used to store mixtures as follows:

19-mm & 25-mm mixtures ..... 24 hours
9.5-mm & 12.5-mm mixtures ..... 36 hours

The storage silos must be well sealed, completely heated and very well insulated. The mixture when removed from the storage silo shall be tested to ensure that it meets all the same specifications and requirements as the mixture delivered directly to the paving site. See Subsection 907-401.02.5.3, subparagraph (i) for sampling and testing requirements.

907-401.03.3--Hauling Equipment. The inside surfaces of each vehicle bed shall be coated with a light application of water and thin oil, soap solution, lime water solution or other approved material to prevent the mixture from sticking. Diesel fuel or gasoline shall not be used to lubricate vehicle beds. Truck beds shall be raised to drain excessive lubricants before placing mixture in the bed. An excess of lubricant will not be permitted.

907-401.03.4--Bituminous Pavers. The screed or strikeoff assembly shall be capable of vibrating and heating the full width of the mixture being placed and shall lay the lift with an automatic control device to the specified slope and grade without tearing, pulling or gouging the

mixture surface.

907-401.03.5--Rollers. All rollers shall be self-propelled units capable of maintaining a smooth and uniform forward and reverse speed as required for proper compaction. They shall be equipped with adjustable scrapers, water tanks, mats and a device for wetting the wheels or tires to prevent the mixture from sticking. Adhesion of the mixture to the rollers will not be permitted. The use of diesel fuel or gasoline for cleaning roller wheels or tires or to aid in preventing the mixture from sticking to the wheels or tires is prohibited.

All rollers shall be in good mechanical condition, free from leaking fuels and lubricants, loose link motion, faulty steering mechanism, worn king bolts and bearings. They shall be operational at slow speeds to avoid displacement of the mixture and capable of reversing direction smoothly and without backlash.

907-401.03.6--Preparation of Grade. The foundation upon which asphalt pavement is to be placed shall be prepared in accordance with the applicable Section of the Standard Specification.

Unless otherwise directed, tack coat shall be applied to the underlying surface on which the mixture is to be placed. Emulsions, if used, must be allowed to "break" prior to placement of the bituminous mixture.

Bituminous mixture shall not be placed against the edge of pavements, curbs, gutters, manholes and other structures until sprayed with a thin uniform tack coating. The tack coat shall be protected until the mixture has been placed.

Existing asphalt pavements that require preliminary leveling or patching in advance of placing the bituminous mixture shall be sprayed with a tack coat material and then brought as nearly as practicable to uniform grade and cross section. The material shall be placed by hand or machine in one or more compacted layers approximately two (2) inches or less in compacted thickness.

907-401.03.7--Blank.

907-401.03.8--Preparation of Mixture.

907-401.03.8.1--Preparation of Mixture For HMA. The temperature of the mixture, when discharged from the mixer, shall not exceed 340°F.

907-401.03.8.2--Preparation of Mixture For WMA. Warm mix asphalt is defined as a plant produced asphalt mixture that can be produced and constructed at lower temperatures than typical hot mix asphalt. Typical temperature ranges of non-polymer modified, WMA produced by foaming the asphalt binder at the plant are typically 270ºF to 295ºF at the point of discharge of the plant. Typical temperature ranges of polymer modified, WMA produced by foaming the asphalt binder at the plant are typically 280ºF to 305ºF at the point of discharge of the plant. WMA produced by addition of a terminal blended additive may allow the producer to reduce the temperatures below 270ºF as long as all mixture quality and field density requirements are met. Production temperatures at the plant may need to be increased or decreased due to factors such as

material characteristics, environmental conditions, and haul time to achieve mixture temperatures at the time of compaction in which uniform mat density can be achieved.

907-401.03.9--Material Transfer Equipment. Excluding the areas mentioned below, the material transferred from the hauling unit when placing the top lift, or the top two (2) lifts of a multi-lift asphalt pavement with density requirements, shall be remixed prior to being placed in the paver hopper or insert by using an approved Materials Transfer Device. Information on approved devices can be obtained from the State Construction Engineer. Areas excluded from this requirement include: leveling courses, temporary work of short duration, detours, bridge replacement projects having less than 1,000 feet of pavement on each side of the structure, acceleration and deceleration lanes less than 1,000 feet in length, tapered sections, transition sections for width, shoulders less than 10 feet in width, crossovers, ramps, side street returns and other areas designated by the Engineer.

907-401.03.10--Spreading and Finishing. Grade control for asphalt pavements shall be established by stringline at least 500 feet ahead of spreading, unless placement is adjacent to curb and gutter, concrete pavement, or other allowed grade control.

The mixture shall be spread to the depth and width that will provide the specified compacted thickness, line, grade and cross section. Placing of the mixture shall be as continuous as possible. On areas where mechanical spreading and finishing is impracticable, the mixture may be spread, raked and luted by hand tools.

Immediately after screeding and prior to compaction, the surface shall be checked by the Contractor and irregularities adjusted. When the edge is feathered as in a wedge lift, it may be sealed by rolling. Irregularities in alignment and grade along the edges shall be corrected before the edges are rolled.

Hauling, spreading and finishing equipment shall be furnished that is capable of and operated in such a manner that the rolling operation will satisfactorily correct any surface blemishes.

The longitudinal joint in the subsequent lift shall offset that in the underlying lift by approximately six (6) inches. However, the joint in the top lift shall be at the centerline or lane line.

907-401.03.11--Compaction. After the mixture has been spread and surface irregularities corrected, it shall be thoroughly and uniformly compacted to the required line, grade, cross section and density.

907-401.03.12--Joints. Joints between previously placed pavement and pavement being placed shall be so formed as to insure thorough and continuous bond.

Transverse construction joints shall be formed by cutting the previously placed mixture to expose the full depth of the lift.

The contact surface of transverse joints and longitudinal joints, except hot joints, shall be sprayed

with a thin uniform tack coating before additional mixture is placed against the previously placed material.

Longitudinal joints shall be formed by overlapping the screed on the previously placed material for a width of at least one (1) inch and depositing the quantity of mixture to form a smooth, tight joint.

Joint Sealant. When a pay item for 907-403-S, Joint Sealant, is included in the contract, the contact surface of transverse joints and longitudinal joints in the surface lift, except hot joints, shall be sealed by spraying a thin, uniform coat of Pavon™, Crafco™ Pavement Joint Adhesive No. 34524, Dura-Fill Cold Joint Adhesive, or approved equal, prior to placement of additional asphalt against the previously placed material. Manufacture's recommendations shall be followed if the material needs to be re-heated, and when placing the thin, uniform coat.

Prior to application of the sealant, the face of the joint shall be thoroughly dry and free from dust or any other material that would prevent proper sealing. All joints shall be swept or blown free of loose material, dirt, vegetation, and other debris by means of compressed air or a power sweeper.

Truck and vehicle traffic shall not drive across a sealed joint until it has dried sufficient to prevent damage from tracking.

The Contractor shall furnish the Engineer three copies of the manufacturer's certification stating that the material used meets the requirement of the specifications.

907-401.03.13--Pavement Samples. The Contractor shall cut samples from each lift of asphalt at the time and locations designated by the Engineer. The samples shall be taken for the full depth of each lift and shall be of a size approved by the Engineer but not to exceed 120 square inches. Tools used for cutting or coring of samples shall be of the revolving blade type such as saw or core drill. Cores shall be taken using a 4.0 to 6.0-inch inside diameter coring bit. The sample hole shall be filled, compacted and finished by the Contractor to conform with the surrounding area. No additional compensation will be allowed for furnishing samples and repairing the areas with new pavement.

907-401.03.14--Shoulder Wedge. The Contractor shall attach a device to the screed of the paver that confines the material at the end gate and extrudes the asphalt material in such a way that results in a compacted wedge shape pavement edge of approximately 30 degrees, but not steeper than 35 degrees. The device shall maintain contact between itself and the road shoulder surface and allow for automatic transition to cross roads, driveways, and obstructions. The device shall be used to constrain the asphalt head reducing the area by 10% to 15% increasing the density of the extruded profile. Conventional single plate strike off shall not be used.

The device shall be TransTech Shoulder Wedge Maker, the Advant-Edge, or a similar approved equal device that produces the same wedge consolidation results. Contact information for these wedge shape compaction devices is the following.

1. TransTech Systems, Inc.
   1594 State Street
   Schenectady, NY 12304
   800-724-6306
   www.transtechsys.com

2. Advant-Edge Paving Equipment, LLC
   P.O. Box 9163
   Niskayuna, NY 12309-0163
   518-280-6090
   Contact; Gary D. Antonelli
   Cell: 518-368-5699
   email: garya@nycap.rr.com
   Website: www.advantedgepaving.com

Before using a similar device, the Contractor shall provide proof that the device has been used on previous projects with acceptable results, or construct a test section prior to the beginning of work and demonstrate wedge compaction to the satisfaction of the Engineer. Short sections of handwork will be allowed when necessary for transitions and turnouts, or otherwise authorized by the Engineer.

MISSISSIPPI DEPARTMENT OF TRANSPORTATION

SPECIAL PROVISION NO. 907-403-14 **CODE: (SP)**

DATE: **12/02/2014**

SUBJECT: **Asphalt Pavements**

Section 403, Asphalt Pavements, of the 2004 Edition of the Mississippi Standard Specifications for Road and Bridge Construction is deleted and replaced as follows.

SECTION 907-403 - ASPHALT PAVEMENTS

907-403.01--Description. This work consists of constructing one or more lifts of asphalt pavement meeting the requirements of Section 907-401 on a prepared surface in accordance with the requirements of this section and in reasonably close conformity with the lines, grades, thicknesses, and typical cross sections shown on the plans or established by the Engineer. This work shall also include applicable in-grade preparation of the underlying course in accordance with Section 321.

The Contractor must select one of the asphalt mixture processes (HMA or WMA) to be used on this project.

907-403.02--Material Requirements. Materials and their use shall conform to the applicable requirements of Subsection 907-401.02.

907-403.03--Construction Requirements.

907-403.03.1--General. Construction requirements shall be as specified in Subsection 907-401.03, except as otherwise indicated in this section or applicable special provisions.

907-403.03.2--Smoothness Tolerances. Except as noted herein, the finished smoothness of each lift shall conform to the designated grade and cross section within the following tolerances from grade stakes or other grade reference points set at 25-foot intervals:

	Lower* & Leveling Lifts	Lower* Intermediate Lift	Top Intermediate Lift	Surface Lift
Maximum deviation from grade and cross section at any point	1/2"	3/8"	1/4"	1/4"
Maximum deviation from A 10 foot straight edge.....	3/8"	1/4"	1/8"	1/8"

Note: Where more than four (4) lifts of asphalt are required, all lifts, excluding the top three (3) lifts, shall meet the requirements of the lower lift.

* When tested longitudinally from a stringline located equidistant above points 50 feet apart, the distance from the stringline to the surface at any two points located 12½ feet apart shall not vary one from the other more than the maximum deviation allowed above from a 10-foot straight edge.

Grade stakes or other grade reference points set at 25-foot intervals and maximum deviation from grade and cross section will not be required provided an approved profile averaging device is furnished and properly used for the four conditions set forth herein; however, all other surface requirements are applicable.

(a) Overlays with one overall lift.

(b) Overlays with two or more overall lifts -- for each lift above the first overall lift provided each underlying overall lift is within the allowable tolerances.

(c) Surface lift of new construction provided the underlying lift is within the allowable tolerances.

(d) Full-depth asphalt construction for lifts above the lower lift provided the lower lift is within the specified tolerances for the lower intermediate lift.

In the placement of full depth asphalt pavement, where the chemically treated base is constructed, graded and/or trimmed, full lane width, to a surface tolerance of ±3/8 inches from design grade, stringline grade controls may be eliminated for the placement of the asphalt drainage course and all asphalt lifts. In addition, where the base course is crushed stone or crushed concrete and is constructed to a surface tolerance of ±3/8 inches from design grade using a stringline controlled spreader, stringline grade controls may be eliminated for the placement of the asphalt drainage course and all asphalt lifts.

All other tolerances as specified in Section 321 are applicable, except for bases, when tested longitudinally, the maximum deviation when measured at the 12½-foot midpoint shall be ±3/8 inches.

Acceptance and payment of asphalt will be determined on a lot to lot basis by cores taken from the completed pavement as outlined in Subsection 907-403.03.3.

Approved contacting type profile averaging devices are those devices capable of working in conjunction with a taut string or wire set to grade, or ski-type device with extreme contact points with the surface at least 30 feet apart. Approved non-contacting type profile averaging devices are laser type ski devices with at least four referencing mobile stations at a minimum length of 24 feet, or an approved equal.

When approved by the Engineer, a short ski or shoe may be substituted for a long ski on the

second paving operation working in tandem.

During the finishing and compacting of pavement lifts, it shall be the responsibility of the Contractor to check the surface and joints for progress toward conformance to surface requirements set forth herein. Variations from surface requirements exceeding the allowable tolerances shall be corrected at the Contractor's expense.

When a portland cement concrete pavement is to be placed on an asphalt lift, the finished top of the asphalt lift shall meet the requirements of Sections 32l and 50l.

Sections(s) or portions thereof representing areas excluded from a smoothness test with the High Speed Inertial Profiling System (IPS) shall also be excluded from consideration for a contract price adjustment for rideability.

Any contract price adjustment for rideability will be applied on a continuous basis to the pay tonnage, determined in accordance with Subsections 907-401.02.6.8 and 907-403.04, for the section(s) or portions thereof for which an adjustment is warranted.

Contract price adjustments for rideability shall only be applicable to the surface lift and furthermore to only the long continuous section(s) or portions of the long continuous section(s) of the surface lift that require smoothness be determined by using a profiling device.

907-403.03.2.1--Smoothness Tolerances for Mean Roughness Index (MRI). Smoothness tolerances shall be applied to asphalt pavements based on the following pavement categories.

Category A applies to the following pavement constructions:

- New construction
- Construction with three (3) or more lifts
- Mill and two (2) or more lifts

Category B applies to the following pavement constructions:

- Mill and one (1) lift
- Two (2) lift overlays without milling

Category C applies to the following pavement constructions:

- Single lift overlay without milling
- All 57,650-pound routes regardless of the pavement construction

Additional projects may qualify for Category C construction at the department's discretion. Spot Leveling does not count as a lift. Full width / continuous leveling courses that have a minimum thickness of ¾" across the entire lane width will be considered a lift.

Category A projects shall have a long continuous interval (528-foot) surface MRI of not more than 60 inches per mile.

Category B projects shall have a long continuous interval (528-foot) surface MRI of not more than 70 inches per mile.

Category C projects shall have the existing surface profiled at no additional cost to the State. These projects shall be measured by a long fixed interval (528-foot) surface MRI and meet the higher value of the following requirements:

A 50% improvement in MRI from the existing surface
OR
80 inches per mile

In the case that 50% of the existing surface MRI is greater than 80 inches per mile, the short continuous threshold shall be increased from 160 inches per mile by the difference between 50% of the existing surface MRI and 80 inches per mile.

For all projects, areas of the surface lift with localized roughness greater than 160 inches per mile as determined by the continuous short interval (25') report will be identified for correction by the Project Engineer.

When a project has multiple lifts, the lift underlying the surface lift shall have a MRI of no more than 10 inches/mile more than the surface lift threshold for both long and short continuous intervals. Category B projects containing multiple lifts must meet the Category C percent improvement requirement for the underlying lift. Corrective action must be taken on those segments that do not meet this requirement. No unit price adjustment will be applied on any underlying lift.

For Category A and B projects, a unit price increase will be added when the MRI for the final surface lift, prior to any required localized roughness (short interval) corrective action, is less than or equal to fifty inches per mile (50.0 inches / mile) on the long interval report. These Projects will be considered for incentive pay based on the following guidelines for the long interval surface lift MRI.

Mean Roughness Index inches / mile	Contract Price Adjustment Percent of Asphalt Unit Bid Price
Less than 35.0	108
35.1 to 40.0	106
40.1 to 45.0	104
45.1 to 50.0	102
50.1 to Required Surface MRI	100

In addition to the above pay incentive factors, a project may be subject to a disincentive when the Long Continuous Interval MRI for the surface exceeds the allowable tolerance.

Mean Roughness Index (inches / mile)	Contract Price Adjustment Percent of Asphalt Unit Bid Price
Above 20.0 Over	REMOVE AND REPLACE
15.1 to 20.0 Over	80
10.1 to 15.0 Over	85
5.1 to 10.0 Over	90
0.1 to 5.0 Over	95
Required Surface MRI	100

For Category C projects, segments may be subject to a disincentive when the Fixed Interval MRI for the surface does not meet the minimum requirements.

Percent Improvement MRI (inches/mile)	Contract Price Adjustment Percent of Asphalt Unit Bid Price
Below 30 Percent	REMOVE AND REPLACE
30.1 to 35.0 Percent	80
35.1 to 40.0 Percent	85
40.1 to 45.0 Percent	90
45.1 to 50.0 Percent	95
Above 50%	100

Segment(s) or portions thereof representing areas excluded from a smoothness test shall also be excluded from consideration for a contract price adjustment for rideability. Where a segment less than 528 feet occurs at the end of a section, it will be combined with the preceding 528-foot segment for calculation of MRI. Corrective action must be taken on those sections that exceed the 'Remove and Replace' threshold as directed by the Project Engineer. The minimum remove and replace length will be 528 feet (0.1 mile). Additional smoothness testing shall be required on sections following replacement and will be required to meet *at least* the maximum surface MRI short of 'Remove and Replace' tolerance.

The above pay factors will be applied in conjunction with the Long Continuous Histogram Chart from ProVAL's Smoothness Assurance Module. The price adjustments for rideability will be tabulated in MDOT's Pay Incentive spreadsheet on the basis of a theoretical tonnage of 110 lbs/yd^2 * inch thickness (pounds per square yard * inch thickness) determined in accordance with Subsections 907-401.02.6.5 and 907-403.04, for the segment(s) or portions thereof for which an adjustment is warranted.

907-403.03.3--Thickness Requirements. Asphalt overlay lifts shall be constructed as nearly in accordance with the thickness shown on the plans as the underlying pavement and foundation will permit. Periodic and cumulative yield tests will be made to determine practicable conformity to the thickness of each lift. The Engineer may order modifications in placement thicknesses to prevent unwarranted variations in plan quantities.

When the paver is operating off an established grade line, no thickness determination will be

required for the various lifts of pavement. It is understood that the tolerances from design grade will control the thickness requirements.

When grade stakes are eliminated by Notice to Bidders or as outlined in Subsection 907-403.03.2(d) and where resulting in the placement of two (2) or more lifts, acceptance and payment will be determined on a lot to lot basis by cores taken from the completed pavement. Lots will be coincidental with acceptance lots for the surface lift as provided in Subsection 907-401.02.6.4, except that only lots resulting from the placement of mainline surface lift will be used for thickness assessment. One core will be obtained at random from each lot. Irregular areas will not be cored.

When the average thickness of all the cores from the lots representing a day's production, excluding any discarded by the Engineer for justifiable reason, is within three-eighths of an inch (3/8") of the total pavement thickness shown on the plans, excluding lift(s) placed using an established grade line, corrective action will not be required and a price adjustment will not be made for non-conformity to specified thickness.

When the average thickness of all the cores from the lots representing a day's production is deficient in thickness by more than three eights of an inch (3/8") of the total pavement thickness shown on the plans, excluding lift(s) placed using an established grade line, the deficiency shall be corrected by overlaying the entire length of the day's production. The thickness of the overlay shall be equal to the thickness deficiency but no less than the minimum single lift laying thickness for the specified mixture.

When the thickness of all the cores from the lots representing a day's production is more than three eights of an inch (3/8") thicker than the total thickness shown on the plans, excluding lift(s) placed using an established grade line, a price adjustment will be made in accordance with Subsection 907-403.05.1.

The cores shall be cut and removed by the Contractor in the presence of the Engineer's representative and turned over to the Engineer's representative for further handling. The Contractor shall fill each core hole with surface lift mixture and compact to the satisfaction of the Engineer within 24 hours after coring.

907-403.03.4--Lift Corrections. Pavement exceeding the allowable surface tolerances shall be corrected at the Contractor's expense by the following methods:

Lower, Leveling and Lower Intermediate Lifts:

(a) Removal or addition of mixture by skin patching, feather edging, wedge lift construction or full depth patching where appropriate and can be completed in a satisfactory manner.

(b) Superimposing an additional layer which shall be an approved grade raise for the full roadway width and length of the area to be corrected.

Top Intermediate Lift:

(a) Removal and the addition of sufficient mixture to provide the specified thickness. Corrections by this method shall be square or rectangular in shape and shall completely cover the area to be corrected.

(b) Superimposing an additional layer of minimum lift thickness for mixture being used which shall be an approved grade raise for full roadway width of the area to be corrected. Transverse joints shall be perpendicular to the centerline of the pavement.

Surface Lift:

(a) Removal and the addition of sufficient mixture to provide new material of at least minimum single lift laying thickness for full lane width of the area to be corrected. Transverse joints shall be perpendicular to the centerline of the lane.

(b) Superimposing an additional layer (minimum lift thickness for mixture being used) which shall be an approved grade raise for full roadway width of the area to be corrected. Transverse joints shall be perpendicular to the centerline of the pavement.

All mixtures used in the correction of unacceptable pavement shall be approved by the Engineer prior to use.

907-403.03.5--Overlays or Widening and Overlays. In addition to the requirements of Subsections 907-403.03.1 through 907-403.03.4, the following requirements will be applicable when an existing pavement is to be overlaid or widened and overlaid.

907-403.03.5.1--Blank.

907-403.03.5.2--Sequence of Operations. In order to expedite the safe movement of traffic and to protect each phase of the work as it is performed, a firm sequence of operations is essential. Unless otherwise provided in the traffic control plan and/or the contract, the following appropriate items of work shall be begun and continually prosecuted in the order listed:

(a) In sections designated by the Engineer, trim the shoulders along the pavement edges to provide drainage from the pavement.

(b) Perform pre-rolling to locate areas of pavement with excessive movement per Section 511.

(c) Perform selective undercutting and patching as directed per Subsection 907-403.03.5.4.

(d) Perform pressure grouting as specified in Section 512.

(e) Clean and seal joints per Section 413.

(f) Complete preparation on one side of roadway to be widened and place widening

materials.

(g) Reconstruct shoulders to elevation necessary to assure traffic safety.

(h) Open the widened section to traffic.

(i) Complete above work for other side of roadway.

(j) Perform preliminary leveling as directed.

(k) Apply interlayer as specified.

(l) Place the first overall leveling lift.

(m) After the first overall leveling lift, reconstruct shoulders as necessary to eliminate vertical differentials which may be hazardous to traffic.

(n) Place first intermediate lift.

(o) Construct shoulders to the contiguous elevation of the first intermediate lift.

(p) Place remaining intermediate lift, if required.

(q) Place surface lift.

(r) Complete construction of shoulders.

(s) Apply permanent traffic marking.

(t) Final cleanup.

The above operations shall be performed in such a manner that traffic will be maintained on a paved surface at all times. Two-lane, two-way highways should not be restricted to a single lane in excess of a 3,000-foot section.

907-403.03.5.3--Widening of Pavement. The foundation for widening shall be formed by trenching or excavating to the required depth and constructing a smooth, firm and compacted foundation. It shall have sufficient density and stability to withstand the placement and compaction of subsequent lifts. Soft, yielding and other unsuitable material which the Engineer determines will not compact readily shall be removed and backfilled with granular material or asphalt as directed.

Except as provided herein, excavation for widening, undercutting or other required excavation shall be spread along the edge of the shoulders, foreslopes or other adjacent areas as directed and will be an absorbed item. When the quantity is in excess of what may be used satisfactorily on adjacent areas, the Engineer may direct that the material be loaded, hauled and spread uniformly

on other designated areas. In this case, compensation for handling surplus material will be in accordance with the appropriate pay items as provided in the contract or as extra work.

If the plans require widening of the shoulders or embankment with Contractor furnished material, all suitable material obtained from widening excavation may be used and will be measured and paid for as Contractor furnished materials. No measurement for payment of haul will be made.

Removal and disposal of old stakes, forms and other debris encountered in excavating shall be in accordance with Section 201 and shall be considered as incidental to and included in the unit prices bid for other items. No separate measurement will be made therefor. Pavement edges and surfaces shall be cleaned prior to final shaping and compaction of adjacent trenching or undercut areas.

Granular material for widening shall be placed on a previously prepared, smooth, firm and unyielding foundation in accordance with the typical section. Density of the granular material shall be as specified.

Asphalt for widening, including trench widening, shall meet the applicable requirements of Section 907-401, Section 907-403, and shall be placed in one or more layers as shown on the plans or directed. The surface of the mixture shall be finished as a continuation of the adjacent pavement slope.

Trench rollers or other compaction equipment shall be used to compact the foundation, granular material and bituminous mixtures for widening when standard width rolling equipment cannot be used.

907-403.03.5.4--Patching. Existing pavement which has failed or unsatisfactorily stabilized shall be removed as directed. Removal of pavement will be measured and paid for under the appropriate pay items as provided in the contract.

Backfill shall consist of asphalt or a combination of compacted layers of aggregate material and asphalt. Unless otherwise specified, the Engineer will make this determination based on depth and field conditions.

Asphalt used for backfilling will be measured and paid for at the contract unit price for the mixture designated on the plans as the lowest lift. Aggregate will be measured and paid for under the appropriate pay item as provided in the contract or as extra work.

907-403.03.5.5--Preliminary Leveling. All irregularities of the existing pavement, such as ruts, cross-slope deficiencies, etc., shall be corrected by spot leveling, skin patching, feather edging or a wedge lift in advance of placing the first overall lift.

907-403.03.5.6--Placement of Lifts. The leveling lift shall be placed in a layer, or layers, not exceeding approximately two and one-half inches compacted thickness.

When single lane construction is required, placement of a lift on the adjacent lane may be performed by an approved profile averaging device provided the lane previously placed is within the allowable tolerances for all surface requirements. When any of the tolerances are exceeded, the Contractor shall reestablish the control stringline for laying the adjacent lane should the Contractor elect to perform this work prior to correcting the deficiencies of the lane previously placed. In no case shall a "matching shoe" be used to control the grade of an adjacent lane.

In instances where there are only minor deviations from the allowable tolerances in the first overall lift, the Engineer may permit the Contractor to place the next higher lift by graded stringline in lieu of making the corrections.

Single lane placement of leveling, intermediate and surface lifts shall be limited to the distance covered in one and one-half days in advance of that placed in the adjacent lane.

907-403.03.5.7--Protection of Pavement. The pavement shall be protected and properly maintained until it has been compacted and cooled sufficiently for use by traffic.

907-403.04--Method of Measurement. Asphalt pavement, of the type specified, will be measured by the ton. The weight of the composite mixture shall be determined in accordance with the provisions of Subsection 907-401.03.2.1.11.

The pay quantities for each individual job mix formula (JMF) will be calculated using the approved JMF maximum specific gravity (Gmm) and the following formulas.

When the composite mixture has a maximum specific gravity of 2.540 or less,

$$Tp = Tw$$

When the composite mixture has a maximum specific gravity greater than 2.540,

$$Tp = Tw((100-(((Gmm*A*B)-C)/(Gmm*A*B))*100))/100$$

Where:

Tp	=	Total tonnage for payment
Tw	=	Total tonnage weighed, used and accepted
Gmm	=	Maximum Specific Gravity of the approved composite asphalt mixture
A	=	46.725 lbs/yd^2/in
B	=	0.93 = 93% density
C	=	110.374 lbs/yd^2/in = Theoretical density at 2.540 Gmm

Unless shown as a separate pay item, the furnishing and application of the tack coat will not be measured for payment. When payment is provided, tack coat will be measured as set out in Section 407.

Joint sealant will be measured by the linear foot for each joint sealed.

The quantity of bituminous mixture required to correct the work, when made at the expense of the Contractor, will not be measured for payment.

Any trenching required for widening will not be measured for payment, such cost thereof shall be included in other items of work.

Undercut required by the Engineer will be measured for payment under the appropriate excavation item as provided in the contract or as extra work. Pavement removal and any required trenching will not be included in the measurement for undercut.

Class "B" structural concrete base substituted for asphalt under portland cement concrete bridge end pavement, as per Subsection 502.03.1, will be paid for as asphalt calculated as follows:

Square yards of portland cement concrete bridge end pavement x concrete base thickness in inches x 0.055 = tons of asphalt.

907-403.05--Basis of Payment. Subject to the adjustments set out in Subsections 907-401.02.6.3, 907-401.02.6.4, 907-401.02.6.5 & 907-403.03.2, asphalt pavement, measured as prescribed above, will be paid for at the contract unit price per ton for each lift of pavement specified in the bid schedule and shall be full compensation for completing the work.

Joint sealant will be paid for at the contract unit price per linear foot for each joint which shall be full compensation for furnishing the joint sealant material, cleaning the joint, applying the sealant, and for all equipment, tools, labor, and incidentals necessary to complete the work.

907-403.05.1--Price Adjustment for Thickness Requirement. When grade stakes are eliminated as provided in Subsection 907-403.03.3 and the average thickness of all cores from lots representing a day's production is more than three eights of an inch (3/8") thicker than the total specified thickness of the pavement, excluding lift(s) placed using an established grade line, a lump sum reduction in payment for the surface lift of lots representing a day's production will be made as follows:

$$\text{Individual Day's L.S. Reduction} = \left(\text{Monetary Value of the Day's Surface Lift Production}\right) \times \frac{(D - 3/8)}{ST}$$

Where:

D = The day's average deviation from total pavement thickness shown on the plans, excluding lift(s) placed using an established grade line.

ST = Specified thickness for surface lift.

The total L.S. reduction for the project is the summation of the individual day's reductions in payment.

907-403.05.2--Pay Items.

Payment will be made under:

907-403-A:	(1) , (4) , Asphalt Pavement	- per ton
907-403-B:	(2) , (4) , Asphalt Pavement, Leveling	- per ton
907-403-C:	(3) , (4) , Asphalt Pavement, Trench Widening	- per ton
907-403-D:	(2) , HT, Asphalt Pavement, Polymer Modified	- per ton
907-403-E:	(2) , HT, Asphalt Pavement, Polymer Modified, Leveling	- per ton
907-403-S:	Joint Sealant	- per linear foot or mile

(1) 4.75-mm mixture, 9.5-mm mixture, 12.5-mm mixture, 19-mm mixture, or 25-mm mixture
(2) 4.75-mm mixture, 9.5-mm mixture, 12.5-mm mixture, or 19-mm mixture
(3) 19-mm mixture or 25-mm mixture
(4) ST, MT or HT

MISSISSIPPI DEPARTMENT OF TRANSPORTATION

SPECIAL PROVISION NO. 907-407-2 **CODE: (SP)**

DATE: 07/22/2014

SUBJECT: Tack Coat

Section 407, Tack Coat, of the 2004 Edition of the Mississippi Standard Specifications for Road and Bridge Construction is hereby amended as follows:

907-407.02.1--Bituminous Material. Delete the second sentence of the first paragraph of Subsection 407.02.1 on page 281, and substitute the following:

When not specified, the materials shall be as specified in Table 410-A on page 293.

907-407.03.3--Application of Bituminous Material. Delete the first paragraph of Subsection 407.03.3 on page 281, and substitute the following.

Tack coat shall be applied with a distributor spray bar. A hand wand will only be allowed for applying tack coat on ramp pads, irregular shoulder areas, median crossovers, turnouts, or other irregular areas. Bituminous materials and application rates for tack coat shall be as specified in Table 410-A on page 293. Tack coat shall not be applied during wet or cold weather, or to a wet surface. Emulsions shall be allowed to "break" prior to superimposed construction.

907-407.05--Basis of Payment. Delete the pay item at the end of Subsection 407.05 on page 282, and substitute the following:

907-407-A: Asphalt for Tack Coat * - per gallon

* Grade may be specified

MISSISSIPPI DEPARTMENT OF TRANSPORTATION

SPECIAL PROVISION NO. 907-601-1 **CODE: (IS)**

DATE: **08/29/2007**

SUBJECT: **Structural Concrete**

Division 600, Incidental Construction, of the 2004 Edition of the Mississippi Standard Specifications for Road and Bridge Construction is hereby amended as follows:

After the heading **DIVISION 600 - INCIDENTAL CONSTRUCTION**, add the following:

Unless otherwise specified, all testing of Portland cement concrete in Division 600 shall be in accordance with the requirements of Subsection 907-601.02.1.

907-601.02--Materials.

907-601.02.1--General. Delete the second and third sentence of the first paragraph of Subsection 601.02.1 on page 348, and substitute the following:

Sampling and testing will be in accordance with TMD-20-04-00-000 or TMD-20-05-00-000, as applicable.

907-601.03.6.3--Removal of Falsework, Forms, and Housing. Delete the first paragraph, the table and second paragraph of Subsection 601.03.6.3 on pages 349 and 350, and substitute the following:

The removal of falsework, forms, and the discontinuance of heating, shall be in accordance with the provisions and requirements of Subsection 907-804.03.15, except that the concrete shall conform to the following compressive strength requirements:

Wingwall and Wall Forms not Under Stress	1000 psi
Wall Forms under Stress	2200 psi
Backfill and Cover clear	2400 psi

In lieu of using concrete strength cylinders to determine when falsework, forms, and housings can be removed, an approved maturity meter may be used to determine concrete strengths by inserting probes into concrete placed in a structure. The minimum number of maturity meter probes required for each structural component shall be in accordance with Subsection 907-804.03.15. Procedures for using the maturity meter and developing the strength/maturity relationship shall follow the requirements of Subsection 907-804.03.15. Technicians using the maturity meter or calculating strength/maturity graphs shall meet the requirements of Subsection 907-804.03.15.

907-601.05--Basis of Payment. Add the “907” prefix to the pay items listed on page 352.

MISSISSIPPI DEPARTMENT OF TRANSPORTATION

SPECIAL PROVISION NO. 907-603-8 **CODE: (IS)**

DATE: 05/12/2008

SUBJECT: Culverts and Storm Drains

Section 603, Culverts and Storm Drains, of the 2004 Edition of the Mississippi Standard Specifications for Road and Bridge Construction is hereby amended as follows.

907-603.03--Construction Requirements.

907-603.03.2--Bedding. After the first paragraph of the Subsection 603.03.2 on page 356, add the following:

Non-rigid pipe used in cross drains and storm drains shall have a Class B bedding. Non-rigid pipe used in side drains shall have a Class C bedding. No separate measurement will be made for pipe bedding. Costs associated with pipe bedding shall be included in the cost of the pipe.

907-603.03.4--Joining Conduit.

907-603.03.4.1--Storm Drainage. Delete the first sentence of the seventh paragraph of Subsection 603.03.4.1 on page 358, and substitute the following:

Flexible steel conduits shall be firmly joined by coupling bands.

907-603.03.7--Backfilling. After the first paragraph of the Subsection 603.03.7 on page 360, add the following:

Backfill of non-rigid corrugated polyethylene and poly (vinyl chloride) (PVC) pipe used in cross drains and storm drains shall be performed using one of the following methods:

1. Flowable fill meeting the requirements of Section 631 of the Standard Specifications. If flowable fill is used, care shall be taken to prevent the pipe from “floating”.
2. Crushed stone aggregate meeting the requirements of Subsection 703.04.3 of the Standard Specification.

No separate measurement will be made for backfilling pipe. Costs associated with backfilling pipe will be included in the cost of the pipe.

907-603.05--Basis of Payment. Add the “907” prefix to pay item nos. 603-ALT, 603-MA thru 603-MH, 603-NA thru 603-NL, 603-PE, and 603-PVC on pages 364 thru 366.

MISSISSIPPI DEPARTMENT OF TRANSPORTATION

SPECIAL PROVISION NO. 907-618-9 **CODE: (IS)**

DATE: 11/08/2012

SUBJECT: Placement of Temporary Traffic Stripe

Section 618, Maintenance of Traffic and Traffic Control Plan, of the 2004 Edition of the Mississippi Standard Specifications for Road and Bridge Construction is hereby amended as follows.

907-618.03.3--Safe Movement of Traffic. Delete subparagraphs (2) and (3) of Subsection 618.03.3 on page 416, and substitute the following.

(2) Temporary edge lines on projects requiring shoulders constructed of granular material may be delayed for a period not to exceed three (3) days.

Temporary edge lines placed on the final pavement course of projects requiring paved shoulders with surface treatment may be placed on the adjacent shoulder in as near the permanent location as possible until the surface treatment is placed. When the edge lines are obliterated by the placement of the surface treatment, the edge lines shall be placed in the permanent stripe location. The replacement of edge lines may be delayed for a period not to exceed three (3) days for a two or three-lane roads.

Delete the first sentence of next to last paragraph of Subsection 618.03.3 on page 416 and substitute the following.

Permanent pavement markings are to be applied no sooner than 10 days nor later than 45 days after placement of the final lift of pavement.

MISSISSIPPI DEPARTMENT OF TRANSPORTATION

SPECIAL PROVISION NO. 907-618-13 **CODE: (SP)**

DATE: 06/03/2014

SUBJECT: Temporary Construction Signs

Section 618, Maintenance of Traffic and Traffic Control Plan, of the 2004 Edition of the Mississippi Standard Specifications for Road and Bridge Construction is hereby amended as follows.

907-618.03--Construction Requirements.

907-618.03.2--Barricades, Signs, and Flaggers. Delete the second paragraph of Subsection 618.03.2 on page 414, and substitute the following.

Flaggers shall be stationed at such points as may be deemed necessary.

Temporary construction signs shall be removed as their use becomes inapplicable. However, placing temporary signs and their supports flat on the ground outside the shoulder break line will be allowed.

907-618.05--Basis of Payment. Delete the first two pay items listed on page 418, and substitute the following.

907-618-A: Maintenance of Traffic - lump sum

907-618-B: Additional Construction Signs - per square foot

MISSISSIPPI DEPARTMENT OF TRANSPORTATION

SPECIAL PROVISION NO. 907-619-2 **CODE: (SP)**

DATE: **03/02/2005**

SUBJECT: **Glare Paddles**

Section 619, Traffic Control for Construction Zones, of the 2004 Edition of the Mississippi Standard Specifications for Road and Bridge Construction is amended as follows:

907-619.02--Materials. After Subsection 619.02.13 on page 424, add the following:

907-619.02.15--Glare Paddles. Glare paddles shall be as manufactured by one of the following companies, or an approved equal.

1. Carsonite International
   2900 Lockhead Way
   Carson City, Nevada 89701
   1-800-327-9647

2. Flexstake, Inc.
   2150 Andre Lane
   Fort Myers, Florida 33912
   1-800-348-9839

3. Safe-Hit Corporation
   23785 Cabot Blvd., #322
   Hayward, California 94545
   1-800-537-8958

4. Gulf Industries, Inc.
   P.O. Box 309
   Mandeville, LA 70740-0309
   1-985-892-6500

907-619.03--Construction Requirements After Subsection 619.03.9 on page 427, add the following:

907-619.03.11--Glare Paddles. Glare paddle installation shall consist of furnishing, installing, maintaining, removing and relocating glare paddles as required. Glare paddles shall be placed atop precast median barriers, or other devices, at locations shown in the plans, or as directed by the Engineer.

The paddles shall be six to nine inches (6" to 9") in width, 24 to 36 inches in height, and spaced a maximum of 24 inches apart. The paddles shall be attached to the top of the devices in accordance with manufacturers recommendations at a 22 degree angle. A yellow high-intensity

reflective strip shall be attached vertically to each side of one of the paddles such that the spacing is 10 feet apart. Unless otherwise directed, these strips shall be placed on the edge of the paddle adjacent to traffic. These reflective strips shall be made of 2-inch by 12-inch material conforming to the requirements of Subsection 721.06 of the Standard Specifications.

All glare paddles shall be properly maintained. Maintenance will include replacement of damaged or missing blades, improper reflectorization, and any other portions of the installation that may fail, for the entire length of time that the paddles are in place. Cleaning of the reflective material shall be accomplished by any means that does not damage the paddles and in a manner that is not hazardous to traffic. Cleaning shall be accomplished on an as-needed basis or as ordered by the Engineer.

The Contractor shall relocate the glare paddles as required during construction at no additional cost to the State.

After completion of the work, glare paddles and attachments shall remain the property of the Contractor.

907-619.04--Method of Measurement. At the end of Subsection 619.04 on page 428, add the following:

Glare paddles shall be measured by the linear foot along the top of the device upon which they are installed. Relocation of glare paddles will not be measured for separate payment.

907-619.05--Basis of Payment. After the first paragraph of Subsection 619.05 on page 428, add the following:

Glare paddles will be paid for at the contract unit price per linear foot, which price shall include all material, equipment, labor and other incidentals required to erect, maintain, remove, transport and relocate the glare paddles.

Payment will be made under:

907-619-P1: Glare Paddles - per linear foot

MISSISSIPPI DEPARTMENT OF TRANSPORTATION

SPECIAL PROVISION NO. 907-619-5 **CODE: (SP)**

DATE: 03/09/2009

SUBJECT: Changeable Message Signs

Section 619, Traffic Control for Construction Zones, of the 2004 Edition of the Mississippi Standard Specifications for Road and Bridge Construction is hereby amended as follows:

907-619.02--Material Requirements. After Subsection 619.02.13 on page 424, add the following.

907-619.02.14--Changeable Message Sign. This work shall consist of furnishing, testing, and maintaining a trailer-mounted electronic Portable Changeable Message Sign (PCMS) assembly. The sign display shall be a LED, full matrix sign. If more than one portable changeable message sign is required for this project, they shall all be of the same model and from the same manufacturer. All parts and materials used to construct the portable changeable message signs shall be interchangeable.

The PCMS shall be a trailer-mounted, solar powered, portable changeable message sign.

Each PCMS shall include the following main components:

a) Sign Housing
b) LED Modules
c) LED Drivers
d) Battery Bank
e) Sign Controller
f) Trailer
g) AC Charger
h) Solar Panel
i) Solar Panel Charger

The LED display shall be full matrix sign with a minimum of 28-pixel rows x 50-pixel columns. The pixel spacing shall be such that three (3) lines of text (5 columns x 7 rows, 8 characters) shall each have a nominal height of 18 inches.

The PCMS shall include a remote communications interface as specified herein. The PCMS shall be provided with a local serial and USB connection within the sign control cabinet so that a laptop computer using the remote software can communicate directly with the sign CPU.

This Special Provision incorporates normative references to other standards as outlined in Section 1 of the NEMA TS-4 standard and as listed below.

NEMA TS4-2004, Hardware Standards for Dynamic Message Signs (DMS) with NTCIP Requirements. All NEMA TS-4 requirements that are applicable to portable signs shall be used.

NTCIP Standards.

If a conflict between the standards referenced and this Special Provision, this Special Provision shall govern.

The definitions of the terms used within this Special Provision are as defined in Section 1 of the NEMA TS-4 standard.

If required in the contract, the PCMS shall include a speed radar unit as specified herein.

907-619.02.14.1--Mechanical Construction. Each PCMS shall meet the following minimum requirements.

Weather-Tight Enclosure. The entire sign and trailer assembly, including each component / equipment exposed to weather, shall be fully protected. It shall withstand the effects of sand, dirt, dust, moisture, hose-directed water, ice, snow and UV radiation (UVA and UVB). It shall withstand the effects of high wind loading and blowing rain as specified herein with all outriggers and/or leveling jacks in place. The sign and all components shall be watertight. Space shall be provided for manuals to be stored in a weatherproof environment.

Wind Loading. Wind loading requirements for the portable sign housing and trailer assembly shall be as specified in Section 3.3.2.1.2 of the NEMA TS-4 standard.

Welding. All welding on all major structural components (aluminum or steel) shall be performed by certified welders and in accordance to SAE/AWS D8.8 American Welding Society.

Protective Coatings. Protective coatings or processes, such as anodizing, e-coating, powder coat painting, plating, etc., shall be incorporated to protect all sign, cabinet, and trailer metal surfaces from corrosion. Any non-protected metallic fasteners shall be made of stainless steel or aluminum. All components shall be similar material, or be isolated to reduce galvanic reactions.

Temperature and Humidity. Each PCMS shall be designed to operate continuously in extreme ambient temperature ranges and at high humidity levels.

Operating ambient temperature range of the portable sign and trailer assembly shall be -29°F to +165°F. Storage temperature range shall be from -40°F to +185°F. The portable sign shall be capable of continued operation within the operating temperature ranges specified without the need for active systems (i.e., fans). Operating relative humidity level of the portable sign shall be up to 95% non-condensing.

Sign Face. Sign face material shall be protected by a non-glaring polycarbonate material of at least ¼-inch thickness. It shall be replaceable and manufactured of material rated for outside use and resistant to UV degradation (exposure to the sun).

All electronics and pixels shall be protected from damage due to moisture.

Sign Housing Construction. The portable sign housing, including its front face panels, shall be designed to conform to the requirements of minimum NEMA Type 3R, as described in the latest edition of NEMA 250.

It shall be comply with latest structural AASHTO requirements.

It shall be constructed of aluminum sheeting which shall not be less than 1/8-inch thick with all seams continuously welded by the inert gas process.

The front of the sign housing shall have a flat black matte finish.

Weep holes shall be provided in the housing to allow moisture from condensation to escape.

The sign housing and cabinets shall be designed to keep insects out.

The sign housing shall be constructed in such a manner as to prohibit stray light from reducing legibility.

All sides of the sign housing shall have a maintenance-free finish.

Alignment of the sign housing shall be capable of being horizontally adjusted to position the sign a full 360 degrees. It shall be capable of rotating and locking at any selected horizontal angle up to 360 degrees. A sight alignment tube/device shall be mounted to horizontally position the sign display. A positive brake assembly with lockable control arm shall be provided to position the sign display in the desired position.

It shall allow easy access to all components contained within the display housing without the removal of any external parts. Door locks shall be rigidly mounted. Gasketing shall be provided on all door openings and shall be dust-tight, permanently bonded to the door metal, and shall not stick to the mating metal surface. A gasket channel shall be provided to support the gasket on the door.

Trailer. Each PCMS trailer shall meet all requirements for trailers as outlined in Section 3.3.3 of the latest NEMA TS-4 standard as well as the following minimum requirements.

All trailers shall meet the requirements of FMVSS, Part 571 and SAE J684 for transport safety including, but not limited to the use of brakes, safety chains, coupling device, and lights. PCMS manufacturer shall provide instructions stating procedures necessary to insure safe transport.

The structural frame shall be capable of supporting the gross vehicle weight (GVW) load of the trailer corresponding to the axle and tire ratings that shall be in accordance with FMVSS, Part 571.

The tires shall be radial ST "Special Trailer" rated. The wheels shall be 15-inch steel wheels with five lug bolts per wheel. Each trailer wheel shall be equipped with one locking lug nut. A minimum of four keys for the locking lug nuts shall be supplied for each trailer.

The trailer shall be provided with a minimum of four outriggers or leveling jacks. One outrigger or leveling jack shall be mounted near each corner of the trailer. The length of the leveling jacks shall be such that when the trailer is level, all four jacks and the tongue jack can be lowered into the vertical position. The jacks shall be screw type jacks with a minimum 25-inch lift. Each jack shall include a swivel mechanism that allows the jacks to be swing up to a horizontal position for towing. The swivel mechanism shall secure the jack in both vertical and horizontal positions through a lock pin.

The trailer shall also be provided with a trailer stand mounted on the tongue of the trailer. The stand shall be corrosion resistant. It shall include a 6-inch wheel that allows horizontal positioning of the trailer. The stand shall be welded, not bolted, to the tongue of the trailer.

The trailer shall be provided with legal tail/brake lights, signals, and license plate mounting bracket. The trailer shall be supplied with an electrical harness assembly for connection to the tow vehicle and shall be terminated in a connector type to be specified by the Engineer.

The trailer shall be provided with a 2-inch "hammer blow coupler" style hitch in accordance with SAE J684 and interchangeable with a 2½-inch Pintle coupler / ring meeting SAE J847.

The trailer spring leafs shall be rated at a minimum of 3500 pounds.

The trailer shall be equipped with a sign display lift and control console. The lift shall be electric, hydraulic lift, or combination of both with manual backup lift. The lift shall be capable of lifting the display a minimum of seven feet (7') above the roadway surface. A mast safety pin shall be provided to prevent the sign display from falling in the event of an electric or hydraulic system failure.

The trailer shall have a minimum of 6,000-pound capacity hydraulic surge brake system along with a breakaway latch.

Illumination shall be provided as an integral part of the sign or trailer assembly to change the sign controller data in darkness.

The trailer shall contain batteries and photovoltaic (solar) panels as specified herein.

<u>Photovoltaic (Solar) Panel System</u>. Each PCMS shall include solar panels. A solar bank shall be assembled using multiple solar panels. All photovoltaic panels shall be listed in accordance with UL 1703, or equivalent. The solar cell bank shall have a minimum capacity of 240 watts. The

solar cell bank shall be mounted on a frame capable of being tilted at a minimum of one direction up to 61 degrees with zero degrees being horizontal. Solar cells shall be laminated between ethylene vinyl acetate and tempered glass. The solar panel shall incorporate an extruded aluminum frame. The solar battery charge controller shall include the following three state charger modes.

- Bulk
- Absorption
- Float

Battery Requirements. Each PCMS shall include batteries for primary energy storage on trailers. The battery bank capacity shall be a minimum of 900 amp/hours at 12VDC at 20-hour rate of discharge. The batteries shall be heavy duty deep cycle type rated for 80% discharge. A battery power disconnect shall be provided.

Battery enclosures shall be vented to prevent the accumulation of explosive gases. The battery cabinets must be lockable with a standard padlock.

AC Charging System. Each PCMS shall have an AC battery charging sub-system. The system shall be UL listed and operate from a standard 120VAC generator meeting all NEC requirements for portable equipment.

The solar battery charger shall include the following three state charger modes.

- Bulk
- Absorption
- Float

The AC battery charger shall have sufficient capacity to charge the battery bank from 80% discharged to fully charge in 24-hours, and operate the sign simultaneously. The AC battery charger shall be equipped with a male plug-in and a 50-foot long extension cord constructed of a minimum 12-guage wire for this purpose.

907-619.02.14.2--Controller to Sign Interface. Each PCMS shall meet all applicable controller to sign interface requirements as outline in Section 4 of the NEMA TS-4 standard.

907-619.02.14.3--Display Properties. Each PCMS shall have a cone of vision (viewing angle) from the center (reference axis) shall be a minimum 15 degrees with the half-power viewing angle defined such that at a given distance from the LED, luminous intensity measured at any point at an angle of 7.5 degrees from the LED's center axis is no less than half the luminous intensity measured directly on the LED's center axis.

The minimum word legibility requirements shall be 1232 feet or greater under daytime light conditions and within the cone of visions as specified. Legibility is defined as the ability to discern the content of a display using a "word message". The minimum word legibility

requirement shall be documented either by a MDOT approved independent testing laboratory or by participation in the NTPEP test program.

The minimum visibility requirements shall be 3000 feet or greater under daytime light conditions and within the cone of vision as specified. Visibility is defined as the ability to recognize that a display exists. The minimum visibility requirement shall be documented either by a MDOT approved independent testing laboratory or by participation in the NTPEP test program.

The PCMS shall be capable of displaying standard fonts and font alphabets as specified in Sections 5.6.1 and 5.6.2.3 of the NEMA TS-4 standard and adhere to NTCIP 1203. The PCMS shall also support moving arrows.

Any NTPEP test results shall be for the PCMS model being used and shall be within the last three completed test cycles.

907-619.02.14.4--Optical Components. The pixels for the PCMS shall be manufactured using Light Emitting Diodes (LED). Changes to displays shall be performed by turning the LEDs in a pixel either on or off. The discrete, LED shall be an untinted, non-diffused, solid-state lamp that uses Aluminum Indium Gallium Phosphide (AlInGap) technology manufactured by Avago Technologies (formerly Agilent Technologies), Toshiba Corporation, Nichia Corporation, or functional equivalent. Horizontal and vertical spacing between modules shall be such that the horizontal and vertical pitch between all pixels is equal. A failure of one pixel shall not effect the operation of any other pixel.

All LEDs used to create a display in a single portable sign shall have a nominally rated LED life of 100,000 hours of operation under field conditions. This shall include a operating temperatures between -29°F to +165°F. LED life shall be defined as the time it takes for the LED light output to degrade to half of the LED's initial light output. Current through an LED shall be limited to the manufacturer's recommendation under any conditions. Each LED character module shall be rated for use over the environmental range specified herein, including heat absorption due to sunlight. The LEDs shall be protected from the outside environmental conditions, including moisture, snow, ice, wind, dust, dirt, and UV rays (UVA and UVB). All LEDs shall be mounted so that they present a uniform and legible display.

Pixels shall be replaceable in modular groupings (modules). All modules within a sign shall be the same size and interchangeable. The replacement of any module shall be possible with no more that simple non-vendor-specific hand tools, such as screw drivers or wrenches, without any physical modification to the module.

907-619.02.14.5--PCMS Controller and Storage Cabinets. All PCMS controller and storage cabinets shall be minimum NEMA 3R rated and be completely encased and lockable with a standard padlock as specified herein. A separate lockable storage cabinet shall be provided to house various accessories. The controller cabinet shall be manufactured to withstand all types of adverse weather conditions and shall be designed and installed to keep insects out. All components inside the controller cabinet shall be accessible without disconnecting any

unassociated wires or components. The controller cabinet shall be illumination. The keyboard terminal and control panel shall be housed. Lighted keys and terminal displays are acceptable.

All controls in the controller cabinet shall be labeled. The cabinet shall have a voltmeter gauge to indicate the current battery charge status. It shall have an amp gauge to indicate the current/charging status. It will be acceptable to have a display via digital readout on a control console or panel.

907-619.02.14.6--Electronics and Electrical. Each PCMS shall meet all applicable electronics and electrical requirements as outline in Section 8 of the NEMA TS-4 standard.

Sign Controller. The PCMS shall include a local sign controller with firmware. The local control interface shall have a keyboard capable of allowing full programming and control of the PCMS locally. It shall have a separate serial RS-232 or USB connection to allow a laptop computer using the remote control software to communicate directly with the sign controller.

Local and remote interfaces shall be password protected to safeguard against unauthorized use.

It shall perform and report the following minimum sign diagnostics both through the local interface and Remote Control Subsystem.

- LED brightness controls
- Sign status
- Communications status
- Battery voltage
- Photocell ambient light level.

It shall automatically report a low battery alarm to a remote user through the Remote Control Subsystem. It shall have an alarm for the controller door open and over temperature.

It shall store and display both textual and graphical symbols. It shall store a minimum of 20 pre-programmed messages and graphics. It shall display preprogrammed (by manufacturer) Manual on Uniform Traffic Control Devices (MUTCD) symbolic messages and standard arrows. It shall schedule predetermined sequences of messages based on a programmed time and date. Each sequence shall display up to four (4) programmed messages (text and/or graphics). It shall display conventional one, two, or three-line messages for display with a choice of a minimum of three font sizes. Character width shall be proportional to the letter type. The one line message font size shall be capable of displaying messages in full size to utilize the maximum area of display.

It shall allow for automatic and manual controls to adjust the brightness of the LEDs. Automatic control shall be capable of varying the LED brightness by sensing the ambient light level using photocells. Manual brightness control shall be password protected to safeguard against unauthorized use.

It shall display a preprogrammed default message or no message at all, after a power recovery from a power failure. The sign shall shut down its LED display if internal cabinet temperatures reach a level that is determined unsafe by the manufacturer.

All communications and power cabling shall be either shielded or routed within conduit to minimize potential EMI/RFI effects.

Remote Control Subsystem. The PCMS shall be supplied with all the hardware and software necessary to control the PCMS from a remote central station.

It shall have a cellular phone and/or modem capable of communication using a MDOT provided cellular service provider. The Contractor shall coordinate with MDOT for cellular service provider. The Contractor shall be responsible for establishing cellular service and providing activated phone number(s) as directed and approved by the MDOT. The Contractor shall pay for cellular service for this project until the Final Maintenance Release as documented by the State Construction Engineer at which time it will be turned over to MDOT.

The cellular service type shall be CDMA/1xRTT or GSM/GPRS, as directed by MDOT.

It shall be capable of supporting connection and remote control, programming and diagnostics via the Internet.

The subsystem shall have all necessary hardware such as external antenna, communications cables, and controller interface and NTCIP Sign controller software. The central station software meeting the following minimum requirements:

- Windows XP compatible
- Capable of running on any desktop or laptop.
- Capable of controlling all PCMS functions through windows and GUIs (Graphical User Interface)
- NTCIP compatible as specified herein.

Communications. In addition to any protocols that may be available from the PCMS Manufacturer, each sign controller shall support NTCIP as follows.

- NTCIP Protocol and Command Sets**.** This specification references several standards through their NTCIP designated names and numbers. Each NTCIP Component covered by these project specifications shall implement the most recent version of the standard that is available as of project advertisement date, including any and all prepared Amendments to these standards as of the same date.

  Profile Implementation Conformance Specifications (PICS) for each NTCIP standard required shall be submitted for review and approval to the Department.

- RS-232 Interface. Communication interfaces using RS-232 shall conform, with the following minimum requirements.

1101 – NTCIP Simple Transportation Management Framework (STMF)
1203 - NTCIP Object Definition for Portable Dynamic Message Signs
2301 - NTCIP AP-STMF
2201 - NTCIP TP-Transportation Transport Profile
2103 – NTCIP SPPPP/RS232
2104 - NTCIP SP-PMPP/RS232

- Subnet Level**.** For each communication interface, the NTCIP Components may support additional Subnet Profiles at the manufacturer's option. At any time, only one Subnet Profile shall be active on a given communication interface. The NTCIP Component shall be configurable to allow the field technician to activate the desired Subnet Profile.

- Transport Level. For each communication interface, the communication interface may support additional Transport Profiles at the manufacturer's option. Response data-grams shall use the same Transport Profile used in the request. Each communication interface shall support the receipt of data-grams conforming to any of the identified Transport Profiles at any time.

- Application Level. For each communication interface, all interfaces shall comply with NTCIP 1101 and shall meet the requirements for Conformance Level 1 (NOTE -See Amendment to standard). Optionally, the NTCIP Component may support SNMP traps. A communication interface may support additional Application Profiles at the manufacturer's option. Responses shall use the same Application Profile used by the request. Each communication interface shall support the receipt of Application data packets at any time allowed by the subject standards.

  Information Level. For all communication interfaces, the information level protocol shall provide Full, Standardized Object Range Support of all objects required by these procurement specifications unless otherwise indicated below. The maximum Response Time for any object or group of objects shall be 200 milliseconds. All communication interfaces shall implement all mandatory objects of all mandatory Conformance Groups as defined in NTCIP 1203 and their respective Amendments. Table 1 indicates the modified object requirements for these mandatory objects. Table 2 shows the required minimum support of messages that are to be stored in permanent memory. The sign shall blank if a command to display a message contains an invalid Message CRC value for the desired message. Table 3 specifies the support of the required MULTI tags and their ranges.

  It shall also implement all mandatory objects of the following optional conformance groups of NTCIP 1201.

  - Time Management Conformal Group
  - Report Conformal Group. Table 4 indicates the modified object requirements.
  - Implement all objects of the Font Configuration Conformance Group, as defined in NTCIP 1203. Table 5 indicates the modified object requirements for this conformance group.

- Implement all objects of the PCMS Configuration Conformance Group, as defined in NTCIP 1203.
- Implement all objects of the Multi Configuration Conformance Group, as defined in NTCIP 1203. Table 6 indicates the modified object requirements for this conformance group.
- Implement all objects of the Multi Error Configuration, as defined in NTCIP 1203.
- Implement all objects of the Illumination/Brightness.
- Sign Status, as defined in NTCIP 1203.
- Status Error, as defined in NTCIP 1203.
- Pixel Error Status, as defined in NTCIP 1203.
- The sign display shall be capable of displaying preprogrammed Manual on Uniform Traffic Control Devices (MUTCD) symbolic messages and standard arrows Since the display of graphics is currently not defined within the NTCIP Standards or their amendments, the vendor shall propose, and provide detailed documentation (i.e., interface protocol description level), how the specified graphical shapes can be displayed.
- Implement the optional objects listed in Table 7.

Table 1
Modified Object Ranges for Mandatory Objects

Object	Reference	Project Requirement
ModuleTableEntry	NTCIP 1201 Clause 2.2.3	Shall contain at least one row with moduleType equal to 3 (software). The moduleMake shall specify the name of the manufacturer, the moduleModel shall specify the manufacturer's name of the component and the modelVersion shall indicate the model version number of the component.
MaxGroupAddresses	NTCIP 1201 Clause 2.7.1	Shall be at least 1
CommunityNamesMax	NTCIP 1201 Clause 2.8.2	Shall be at least 3
PCMSNumPermanentMsg	NTCIP 1203 Clause 2.6.1.1.1.1	Shall be at least 20*
PCMSMaxChangeableMsg	NTCIP 1203 Clause 2.6.1.1.1.3	Shall be at least 50. Each message shall support at least 4 pages per message.
PCMSFreeChangeableMemory	NTCIP 1203 Clause 2.6.1.1.1.4	Shall be at least 70 when no messages are stored.
PCMSMessageMultiString	NTCIP 1203 Clause 2.6.1.1.1.8.3	The PCMS shall support any valid MULTI string containing any subset of those MULTI tags listed in Table 4.
PCMSControlMode	NTCIP 1203 Clause 2.7.1.1.1.1	Shall support at least the following modes: ▪ local ▪ external ▪ central ▪ centralOverride

Table 2
Content of Permanent Messages

Perm. Msg. Num.	Section 12 Description
1	Permanent Message #1 shall blank the display (i.e., command the sign to use PCMSMessageType 7). It shall have a run-time priority of 50.

Table 3
Required MULTI Tags

Code	Feature
f1	Field 1 - time (12hr)
f2	Field 2 - time (24hr)
f8	Field 8 - day of month
f9	Field 9 – month
f10	Field 10 - 2 digit year
f11	Field 11 - 4 digit year
Fl (and /fl)	flashing text on a line by line basis with flash rates controllable in 0.5 second increments.
Fo	Font
J12	justification - line – left
J13	justification - line – center
J14	justification - line – right
J15	justification - line – full
Jp2	justification - page – top
Jp3	justification - page - middle
Jp4	justification - page - bottom
Nl	New line
Np	New page, up to 2 instances in a message (i.e., up to 4 pages/frames in a message counting first page)
Pt	page times controllable in 0.5 second increments.

Table 4
Modified Object Ranges for the Report Conformance Group

Object	Reference	Project Requirement
maxEventLogConfigs	NTCIP 1201 Clause 2.5.1	Shall be at least 50
eventConfigurationMode	NTCIP 1201 Clause 2.4.3.1	The NTCIP Component shall support the following Event Configuration Modes: ▪ onChange ▪ greaterThanValue ▪ smallerThanValue
maxEventLogSize	NTCIP 1201 Clause 2.5.3	Shall be at least 200
maxEventClasses	NTCIP 1201 Clause 2.5.5	Shall be at least 16

Table 5
Modified Object Ranges for the Font Configuration Conformance Group

Object	Reference	Project Requirement
numfont	NTCIP 1203 Clause 2.4.1.1.1.1	Shall be at least 3*
maxFontCharacters	NTCIP 1203 Clause 2.4.1.1.1.3	Shall be at least 127**

* Upon delivery, the first font shall be a standard 18-inch font. The second font shall be a double-stroke 18-inch font. The third font shall be a 28-inch font.

** Upon delivery, the first three font sets shall be configured in accordance with the ASCII character set for the following characters:

"A" thru "Z" - All upper case letters.
"a" thru "z" - All lower case letters.
"0" thru "9" - All decimal digits.
Space (i.e., ASCII code 0x20).
Punctuation marks shown in brackets [. , ! ? - ‘ ’ “ ” / ( )]
Special characters shown in brackets [# & * + < >]

Table 6
Modified Object Ranges for the MULTI Configuration Conformance Group

Object	Reference	Project Requirement
defaultBackgroundColor	NTCIP 1203 Clause 2.5.1.1.1.1	The PCMS shall support the following background colors: ▪ black
defaultForegroundColor	NTCIP 1203 Clause 2.5.1.1.1.2	The PCMS shall support the following foreground colors: ▪ amber ▪ orange
defaultJustificationLine	NTCIP 1203 Clause 2.5.1.1.1.6	The PCMS shall support the following line justification: ▪ Left ▪ Center ▪ Right ▪ Full
defaultJustificationPage	NTCIP 1203 Clause 2.5.1.1.1.7	The PCMS shall support the following forms of page justification: ▪ Top ▪ Middle ▪ Bottom
defaultPageOnTime	NTCIP 1203 Clause 2.5.1.1.1.8	The PCMS shall support the full range of these objects with step sizes no larger than 0.5 seconds
defaultPageOffTime	NTCIP 1203 Clause 2.5.1.1.1.9	The PCMS shall support the full range of these objects with step sizes no larger than 0.5 seconds
defaultCharacterSet	NTCIP 1203 Clause 2.5.1.1.1.10	The PCMS shall support the following character sets: ▪ eightBit

Table 7
Optional Object Requirements

Object	Reference	Project Requirement
globalSetIDParameter	NTCIP 1201 Clause 2.2.1	
eventConfigLogOID	NTCIP 1201 Clause 2.5.2.7	
eventConfigAction	NTCIP 1201 Clause 2.5.2.8	
eventClassDescription	NTCIP 1201 Clause 2.5.6.4	
defaultFlashOn	NTCIP 1203 Clause 2.5.1.1.1.3	The PCMS shall support the full range of these objects with step sizes no larger than 0.5 seconds
defaultFlashOff	NTCIP 1203 Clause 2.5.1.1.1.4	The PCMS shall support the full range of these objects with step sizes no larger than 0.5 seconds
PCMSSWReset	NTCIP 1203 Clause 2.7.1.1.1.2	
PCMSMessageTimeRemaining	NTCIP 1203 Clause 2.7.1.1.1.4	
PCMSShortPowerRecoveryMessage	NTCIP 1203 Clause 2.7.1.1.1.8	
PCMSLongPowerRecoveryMessage	NTCIP 1203 Clause 2.7.1.1.1.9	
PCMSShortPowerLossTime	NTCIP 1203 Clause 2.7.1.1.1.10	
PCMSResetMessage	NTCIP 1203 Clause 2.7.1.1.1.11	
PCMSCommunicationsLossMessage	NTCIP 1203 Clause 2.7.1.1.1.12	
PCMSTimeCommLoss	NTCIP 1203 Clause 2.7.1.1.1.13	
PCMSEndDurationMessage	NTCIP 1203 Clause 2.7.1.1.1.15	
PCMSMemoryMgmt	NTCIP 1203 Clause 2.7.1.1.1.16	The PCMS shall support the following Memory

		management Modes: ▪ normal ▪ clearChangeableMessage ▪ clearVolatileMessages
PCMSMultiOtherErrorDescription	NTCIP 1203 Clause 2.7.1.1.1.20	If the vendor implements any vendor-specific MULTI tags, the PCMS shall be provided with documentation that includes meaningful error messages within this object whenever one of these tags generates an error.
PCMSIllumLightOutputStatus	NTCIP 1203 Clause 2.8.1.1.1.9	
watchdogFailureCount	NTCIP 1203 Clause 2.11.1.1.1.5	
PCMSStatDoorOpen	NTCIP 1203 Clause 2.11.1.1.1.6	
fanFailure	NTCIP 1203 Clause 2.11.2.1.1.8	
fanTestActivation	NTCIP 1203 Clause 2.11.2.1.1.9	
tempMinCtrlCabinet	NTCIP 1203 Clause 2.11.4.1.1.1	
tempMaxCtrlCabinet	NTCIP 1203 Clause 2.11.4.1.1.2	
tempMinSignHousing	NTCIP 1203 Clause 2.11.4.1.1.5	
tempMaxSignHousing	NTCIP 1203 Clause 2.11.4.1.1.6	

NTCIP Compliance Documentation. Software shall be supplied with full documentation, including a CD-ROM containing ASCII versions of the following Management Information Base (MIB) files in Abstract Syntax Notation 1 (ASN.1) format.

The relevant version of each official standard MIB Module referenced by the device functionality shall be included. If the device does not support the full range of any given object within a Standard MIB Module, a manufacturer specific version of the official Standard MIB Module with the supported range indicated in ASN.1 format in the SYNTAX and/or DESCRIPTION fields of the associated OBJECT TYPE macro shall be provided. The filename of this file shall be identical to the standard MIB Module, except that it will have the extension ".man".

A MIB Module in ASN.l format containing any and all manufacturer-specific objects supported by the device with accurate and meaningful DESCRIPTION fields and supported ranges indicated in the SYNTAX field of the OBJECT-TYPE macros shall be provided. This includes a MIB containing any other objects supported by the device.

Additionally, the manufacturer shall provide a test procedure that demonstrates how the NTCIP compliance of both, the data dictionaries (NTCIP 1201, 1203, and their amendments) and the communications protocols have been tested. The manufacturer shall allow the use of any and all of this documentation by any party authorized by the Procuring Agency for systems integration purposes at any time initially or in the future, regardless of what parties are involved in the systems integration effort.

907-619.02.14.7–Additional Equipment Requirements. When the contract requires the PCMS to include a speed radar unit, the radar shall operate in the "K" band, in an "approach only" mode. In conjunction with the radar, the sign shall be capable of displaying the vehicle speeds. The unit shall be programmable to allow the interruption of user-defined messages by the vehicle speed display and/or alternate messages whenever a settable speed threshold is exceeded. The radar unit shall be encased in an aluminum enclosure with a polycarbonate lens, and the metal portion shall receive the same protective coating, priming, and painting as the rest of the sign

907-619.02.14.8–System Documentation. For each PCMS, the Contractor shall provide two (2) user manuals. The user manual shall include description and samples for all operational functions, software required to operate the sign on site and remotely, all wiring diagrams, a parts lists, the sign specifications, warranty information, maintenance information and schedule, and a trouble shooting table

Each copy shall be bound and shall contain laminated sheets.

907-619.03--Construction Requirements. After Subsection 619.03.9 on page 427, add the following.

907-619.03.10--Changeable Message Sign. Each changeable message sign shall be installed and continuously operated at the location selected by the Engineer on State right-of-way. The Contractor is advised that selected locations may be outside the planned indicated limits of the project. The Contractor shall perform all work necessary for preparation of the site selected and approved by the Engineer, to insure maximum safety for and sign visibility of the traveling public; and may be required to remove any temporary work at a later date as directed by the Engineer. The Contractor will also place a minimum of two plastic drums in advance of the sign and one beside the sign as long as it is in use. The Contractor shall be required to move the sign to a new location if directed by the Engineer.

The Contractor may be permitted to bring electric power from outside the normal right-of-way for operation of the equipment if the Department determines that the installation operation will not be hazardous to the traveling public. The Contractor will be required to secure a permit from the Department prior to any work by the power company on the right-of-way. The entire cost of

providing electrical service, power to operate the equipment, and removal of the power source from the right-of-way shall be borne by the Contractor.

The changeable message sign(s) will remain the property of the Contractor after the Engineer determines that there is no further need for the sign(s) on the project.

907-619.04--Method of Measurement. After the last paragraph of Subsection 619.04 on page 428, add the following.

Changeable message signs, as described above, will be measured by the unit. When directed, separate measurements will be made for items included in the contract and required for temporary site preparation for the sign as referenced in Subsection 907-619.03.10. Materials for which no pay items are included in the contract will not be measured for separate payment. Separate measurements will not be made for moving the changeable message sign to a new location, but materials used for which pay items are included in the contract and are necessary for repositioning the sign as directed by the Engineer will be measured for separate payment. Removal of materials used for site preparation for changeable message signs will not be measured for separate payment.

907-619.05--Basis of Payment. After the second paragraph of Subsection 619.05 on page 428, add the following.

Payment for items required by the Engineer for temporary location of the changeable message sign, and for which pay items are included in the contract, will be made by the individual pay item. No additional payment will be made for having to work outside the planned indicated project limits.

Payment for removal of materials used for site preparation at changeable message sign locations shall be included in the contract bid price for Maintenance of Traffic.

Between pay item nos. 619-E2 and 619-F1 on page 429, insert the following:

907-619-E3: Changeable Message Sign * - per each

* Indicate when options are required

MISSISSIPPI DEPARTMENT OF TRANSPORTATION

SPECIAL PROVISION NO. 907-626-25 **CODE: (IS)**

DATE: **11/13/2012**

SUBJECT: **Thermoplastic Traffic Markings**

Section 626, Thermoplastic Traffic Markings, of the 2004 Edition of the Mississippi Standard Specifications for Road and Bridge Construction is hereby amended as follows.

907-626.01--Description. After the last sentence of the first paragraph of Subsection 626.01 on page 443, add the following.

All pavement marking material, excluding edge lines over rumble strips, shall be applied using the extrusion/ribbon method. Edge lines placed over rumble strips shall be applied using the atomization/spray method.

907-626.03.1.1--Equipment. After the second paragraph of Subsection 626.03.1.1 on page 444, add the following.

When edge lines are placed over rumble strips, the equipment must be able to apply the marking material using the atomization/spray method instead of extrusion/ribbon method.

907-626.03.1.2--Construction Details. Delete the second sentence of the first full paragraph of Subsection 626.03.1.2 on page 445, and substitute the following.

Unless otherwise specified in the plans or contract documents, the thickness shall be 90 mils for edge lines, center lines, lane lines, barrier lines and detail stripe including gore markings, and 120 mils for crosswalks, stop lines, and railroad, word and symbol markings.

After the last sentence of the third full paragraph of Subsection 626.03.1.2 on page 445, add the following.

When double drop thermoplastic stripe is called for in the contract, additional beads by the drop-on method shall be applied as follows.

Class A glass beads at a rate of not less than three pounds of beads per 100 feet of six-inch stripe.
Class B glass beads at a rate of not less than three pounds of beads per 100 feet of six-inch stripe.

The Class B glass beads shall be applied to the newly placed stripe first, followed by the application of the Class A glass beads.

907-626.05--Basis of Payment. Delete the pay items listed on page 446 and substitute the following.

907-626-A:	6" Thermoplastic* Traffic Stripe, Skip White	- per linear foot or mile
907-626-B:	6" Thermoplastic* Traffic Stripe, Continuous White	- per linear foot or mile
907-626-C:	6" Thermoplastic* Edge Stripe, Continuous White	- per linear foot or mile
907-626-D:	6" Thermoplastic* Traffic Stripe, Skip Yellow	- per linear foot or mile
907-626-E:	6" Thermoplastic* Traffic Stripe, Continuous Yellow	- per linear foot or mile
907-626-F:	6" Thermoplastic* Edge Stripe, Continuous Yellow	- per linear foot or mile
907-626-G:	Thermoplastic* Detail Stripe, Color	- per linear foot
907-626-H:	Thermoplastic* Legend, White	- per linear foot or square foot

* Indicate Double Drop if applicable

MISSISSIPPI DEPARTMENT OF TRANSPORTATION

SPECIAL PROVISION NO. 907-630-7 **CODE: (SP)**

DATE: 05/16/2007

SUBJECT: Remove and Reset Signs

Section 630, Traffic Signs and Delineators of the Mississippi Standard Specifications for Road and Bridge Construction, 2004 Edition, is hereby amended as follows:

907-630.01--Description. After the last paragraph of Subsection 630.01 on page 454, add the following:

Selected existing, temporarily installed, and/or permanently installed signs other than construction traffic control signs shall be removed and reset as shown on the plans, in the contract documents, or as directed by the Engineer. Removing and resetting of signs may include provisions of continuous sign visibility by the traveling public before, during, and after the operation. The Contractor shall provide all materials necessary to remove and reset the sign, including any footings, supports, brackets, hardware, breakaway features and other incidentals. All installations within 30 feet of the pavement edge of temporary or permanent thru lanes shall include breakaway support features certified to meet NCHRP Report 350 prior to the removal and resetting of the sign.

907-630.04--Method of Measurement. After the last paragraph of Subsection 630.04 on page 463, add the following:

Remove and reset sign whether an existing, temporarily installed, and/or permanently installed signs will be measured as a unit quantity per each consisting of work as described above. Each removal and resetting of a sign assembly as described herein will be measured for payment. No separate measurement will be made for removal only of a sign assembly, as said removal shall be included in the appropriate pay item for removal of signs. If a sign assembly is removed and temporarily placed in storage, then later reset as directed by the Engineer, measurement for payment will be made one time only, after the stored sign is reset. No separate measurement will be made for any materials necessary to effect the removal and resetting, including footings, supports, brackets, hardware, breakaway features and other incidentals.

907-630.05--Basis of Payment. After the first paragraph of Subsection 630.05 on page 463, add the following:

Remove and reset sign, measured as prescribed above, will be paid for at the contract unit price per each, which price shall be full compensation for furnishing and placing all materials necessary to effect the removal and resetting, including footings, supports, brackets, hardware, breakaway features; and for all labor, equipment, tools and incidentals necessary to complete the work.

Add the following to the list of pay items on page 463.

907-630-O: Remove and Reset Sign, Description - per each

MISSISSIPPI DEPARTMENT OF TRANSPORTATION

SUPPLEMENT TO SPECIAL PROVISION NO. 907-701-5

DATE: 09/17/2014

SUBJECT: Hydraulic Cement

In the last paragraph of Subsection 907-701.04.1.1 on page 3, change "AASHTO Designation: M 240, Table 3" to "AASHTO Designation: M 240, Table 4".

MISSISSIPPI DEPARTMENT OF TRANSPORTATION

SPECIAL PROVISION NO. 907-701-5 **CODE: (SP)**

DATE: 08/20/2014

SUBJECT: Hydraulic Cement

Section 701, Hydraulic Cement, of the 2004 Edition of the Mississippi Standard Specifications for Road and Bridge Construction is hereby amended as follows:

Delete Subsection 701.01 on pages 595 & 596, and substitute the following:

907-701.01--General. The following requirements shall be applicable to hydraulic cement:

Only hydraulic cements conforming to Section 701 shall be used. Hydraulic cements shall not be listed or designated as meeting more than one AASHTO or Department type.

Different brands of hydraulic cement, or the same brand of hydraulic cement from different mills, shall not be mixed or used alternately in any one class of construction or structure, without written permission from the Engineer; except that this requirement will not be applicable to hydraulic cement treatment of design soils, or bases.

The Contractor shall provide suitable means for storing and protecting the hydraulic cement against dampness. Hydraulic cement, which for any reason, has become partially set or which contains lumps of caked hydraulic cement will be rejected. Hydraulic cement salvaged from discarded or used bags shall not be used.

The temperature of bulk hydraulic cement shall not be greater than l65°F at the time of incorporation in the mix.

Acceptance of hydraulic cement will be based on the certification program as described in the Department's Materials Division Inspection, Testing, and Certification Manual and job control sampling and testing as established by Department SOP.

Retests of hydraulic cement may be made for soundness and expansion within 28 days of test failure and, if the hydraulic cement passes, it may be accepted. Hydraulic cement shall not be rejected due to failure to meet the fineness requirements if upon retests after drying at 212°F for one hour, it meets such requirements.

Delete Subsection 701.02 on page 596, and substitute the following:

907-701.02--Portland Cement.

907-701.02.1--General.

907-701.02.1.1--Types of Portland Cement. Portland cement (cement) shall be either Type I or Type II conforming to AASHTO Designation: M85. Type III cement conforming to AASHTO Designation: M85 or Type III (MS), as defined by the description below Table 1, may be used for the production of precast or precast-prestressed concrete members.

907-701.02.1.2--Alkali Content. All cement types in this Subsection shall meet the Equivalent alkali content requirement for low-alkali cements listed in AASHTO Designation: M85, Table 2.

907-701.02.2--Replacement by Other Cementitious Materials. The maximum replacement of cement by weight is 25% for fly ash or 50% for ground granulated blast furnace slag (GGBFS). The minimum tolerance for replacement shall be 5% below the maximum replacement content. Replacement contents below this minimum tolerance by fly ash or GGBFS may be used, but shall not be given any special considerations, like the maximum acceptance temperature for portland cement concrete containing pozzolans. Special considerations shall only apply for replacement of cement by fly ash or GGBFS.

907-701.02.2.1--Portland Cement Concrete Exposed to Soluble Sulfate Conditions or Seawater. When portland cement concrete is exposed to moderate or severe soluble sulfate conditions, or to seawater, cement types and replacement of cement by Class F fly ash, GGBFS, or silica fume shall be as follows in Table 1.

Table 1- Cementitious Materials for Soluble Sulfate Conditions

Sulfate Exposure	Water-soluble sulfate (SO_4) in soil, % by mass	Sulfate (SO_4)in water, ppm	Cementitious material required*
Moderate and Seawater	0.10 - 0.20	150 - 1,500	Type II **, ***, **** cement, or Type I cement with one of the following replacements of cement by weight: 25% Class F fly ash, 50% GGBFS, or 8% silica fume
Severe	0.20 - 2.00	1,500 - 10,000	Type I cement with a replacement by weight of 50% GGBFS, or Type II cement with one of the following replacements of cement by weight: 25% Class F fly ash, 50% GGBFS, or 8% silica fume

* The values listed in this table for replacement of portland cement by the cementitious materials listed are maximums and shall not be exceeded. The

minimum tolerance for replacement shall be 0.5% below the maximum replacement content. Replacement contents below this minimum tolerance by the cementitious materials listed in this table do not meet the requirements for the exposure conditions listed and shall not be allowed.

** Type III cement conforming to AASHTO Designation: M85 with a maximum 8% tricalcium aluminate (C_3A) may be used in lieu of Type II cement as allowed in Subsection 907-701.02.1; this cement is given the designation "Type III(MS)".

*** Blended cement meeting the sulfate resistance requirements of Subsection 907-701.04 may be used in lieu of Type II as allowed in Subsection 907-701.04.

**** Class F fly ash or GGBFS may be added as a replacement for cement as allowed in Subsection 907-701.02.2.

Class C fly ash shall not be used as a replacement for cement in any of the sulfate exposure conditions listed above.

907-701.02.2.2--Cement for Soil Stabilization Exposed to Soluble Sulfate Conditions or Seawater. When portland cement for use in soil stabilization is exposed to moderate or severe soluble sulfate conditions, or to seawater, cement types and replacement of cement by Class F fly ash or GGBFS shall meet the requirements of Subsection 907-701.02.2.1. Silica fume shall be used to bring the cementitious materials into compliance with the requirements of Table 1.

Delete Subsection 701.03 on page 596, and substitute the following:

907-701.03--Masonry Cement. Masonry cement shall conform to ASTM Designation: C 91 and shall only be used in masonry applications.

Delete Subsection 701.04 on page 596, and substitute the following:

907-701.04--Blended Hydraulic Cement.

907-701.04.1--General.

907-701.04.1.1--Types of Blended Cement. Blended hydraulic cements (blended cements) shall be of the following types and conform to AASHTO Designation: M 240:

Type IS – Portland blast-furnace slag cement
Type IP – Portland-pozzolan cement
Type IL – Portland-limestone cement

Blended cement Types IS and IP for use in portland cement concrete or soil stabilization exposed to the moderate soluble sulfate condition or exposure to seawater as defined in Table 1 shall meet the Sulfate resistance requirement listed in AASHTO Designation: M 240, Table 3 and the "(MS)" suffix shall be added to the type designation.

907-701.04.1.2--Alkali Content. All blended cement shall be made with clinker that would result in cement meeting the requirements of Subsection 907-701.02.1.2 when used in the production of AASHTO Designation: M 85, Type I or Type II cement.

907-701.04.2--Replacement by Other Cementitious Materials. The maximum replacement of blended cement Type IL by weight is 35% for fly ash or 50% for GGBFS. Replacement contents below 20% fly ash or 45% GGBFS may be used, but shall not be given any special considerations, like the maximum acceptance temperature for portland cement concrete containing pozzolans. Special considerations shall only apply for replacement of blended cement by fly ash or GGBFS. No additional cementitious materials, such as Portland cement, performance hydraulic cement, fly ash, GGBFS, metakaolin, or others, shall be added to or as a replacement for blended cement Types IS and IP.

907-701.04.3--Exposure to Soluble Sulfate Conditions or Seawater. When portland cement concrete or blended cement for soil stabilization is exposed to moderate soluble sulfate conditions or to seawater, where the moderate soluble sulfate condition is defined in Table 1, the blended cement shall meet the sulfate resistance requirement listed in AASHTO Designation: M 240, Table 3.

When portland cement concrete or blended cement for soil stabilization is exposed to severe soluble sulfate conditions, where the severe soluble sulfate condition is defined in Table 1, blended cements shall not be used.

MISSISSIPPI DEPARTMENT OF TRANSPORTATION

SPECIAL PROVISION NO. 907-702-5 **CODE: (SP)**

DATE: **08/12/2014**

SUBJECT: **Specifications for Bituminous Materials**

Section 702, Bituminous Materials, of the 2004 Edition of the Mississippi Standard Specifications for Road and Bridge Construction is hereby amended as follows.

907-702.05--Petroleum Asphalt Cement. Delete the third paragraph of Subsection 702.05 on page 598, and substitute the following.

The bituminous material used in all types of asphalt mixtures shall conform to AASHTO Designation: M 320, Performance Grade PG 67-22, as modified in the table below, except that Polyphosphoric Acid (PPA) may be used at low dosage rates as a modifier to enhance the physical properties of a base binder to meet the requirements for Performance Grade PG 67-22. In addition, PPA may be used as a catalyst or mixing agent at low dosage rates in the production of Polymer Modified, Performance Grade PG 76-22.

When PPA is used as a modifier, in no case shall the PPA modifier be used to adjust the physical properties of the binder a full binder grade. For example: the base binder (unmodified) is graded as a PG 64-22 and should only be modified by the addition of PPA to a modified binder grade of PG 67-22.

When petroleum asphalt cement is modified by PPA, the following dosage limits shall be applied.

Grade	Dosage Limit
PG 67-22	0.75% by weight of binder
PG 76-22	0.50% by weight of binder

907-702.07--Emulsified Asphalt.

907-702.07.2--Anionic and Cationic. After the last paragraph of Subsection 702.07.2 on page 600, add the following.

LockDown (LD-7) and CQS-1h shall conform to the requirements of Table V.

907-702.07.3--Polymer Modified Cationic Emulsified Asphalt (CRS-2P). Delete the paragraph in Subsection 702.07.3 on page 600, and substitute the following.

Polymer Modified Cationic Emulsified Asphalt shall conform to the requirements of AASHTO Designation: M 316, with the following exception:

In Table 1, the Ductility, 25˚C, 5 cm/min, shall be a minimum of 100 cm.

907-702.12--Tables. After the last Table of Subsection 702.12 on page 606, add the following.

TABLE V
SPECIFICATION FOR FOG SEAL

	LD-7		CQS-1h		
Test Requirements	**Min.**	**Max.**	**Min.**	**Max.**	**Test Method**
Viscosity, Saybolt Furol, @ 25°C, Sec.	15	100	20	150	AASHTO T 72
Storage Stability Test, 24 hr, %	-	1	-	1	AASHTO T 59
Settlement, 5 day, %	-	5	-	-	AASHTO T 59
Particle Charge	-	-	Positive		AASHTO T 59
Oil Distillate, %	-	1	-	-	AASHTO T 59
Sieve Test, % *	-	0.3	-	0.1	AASHTO T 59
Residue by Distillation, %	40	-	60	-	AASHTO T 59
Test on Residue from Distilation					
Penetration @ 25°C	-	20	-	-	AASHTO T 49
Penetration @ 25°C, 100g, 5s	-	-	60	110	AASHTO T 49
Softening Point, °C	65	-	-	-	ASTM 36
Solubility in trichloroethylene, %	97.5	-	97.5	-	AASHTO T 44
Ductility @ 25°C, cm	-	-	40	-	AASHTO T 51
Original DSR @ 82° (G*/Sinδ, 10 rad/sec)	1	-	-	-	AASHTO T 111

* The Sieve result is tested for reporting purpose only, and it may be waived if no application problems are present in the field.

MISSISSIPPI DEPARTMENT OF TRANSPORTATION

SUPPLEMENT TO SPECIAL PROVISION NO. 907-703-12

DATE: **01/29/2015**

SUBJECT: **Aggregates**

In the title of Subsection 907-703.06 on page 2, delete "Hot Mix".

MISSISSIPPI DEPARTMENT OF TRANSPORTATION

SPECIAL PROVISION NO. 907-703-12 **CODE: (IS)**

DATE: 10/28/2014

SUBJECT: Aggregates

Section 703, Aggregates, of the 2004 Edition of the Mississippi Standard Specifications for Road and Bridge Construction is hereby amended as follows:

907-703.03.2.4--Gradation. Delete the table in Subsection 703.03.2.4 on page 611 and substitute the following.

Table of Sizes and Gradation of Coarse Aggregate for Portland Cement Concrete

Square Mesh Sieves	Percent Passing by Weight						
	Size No. 467	Size No. 57	Size No. 67	Size No. 7	Size No. 78	Size No. 8	Size No. 89
2 inch	100						
l½ inch	95-100	100					
1 inch		80-100	100				
3/4 inch	35-70		80-100	100	100	100	
1/2 inch		25-60		90-100	90-100	95 100	100
3/8 inch	10-30		20-55	40-70	40-75	75-100	85 100
No. 4	0-5	0-10	0-10	0-15	5-25	5-30	20-40
No. 8		0-5	0-5	0-5	0-10	0-10	0-10
No. 16					0-5	0-5	0-5

Delete the last sentence of the last paragraph of Subsection 703.03.2.4 on page 611.

907-703.04--Aggregate for Crushed Stone Courses.

907-703.04.1--Coarse Aggregate. Delete the first paragraph of Subsection 703.04.1 on page 611, and substitute the following.

Coarse aggregate, defined as material retained on No. 8 sieve, shall be either crushed limestone, steel slag, granite, concrete, or combination thereof. Crushed concrete is defined as recycled concrete pavement, structural concrete, or other concrete sources that can be crushed to meet the gradation requirements for Size No. 825B as modified below. In no case shall waste from concrete production (wash-out) be used as a crushed stone base.

907-703.04.2--Fine Aggregate. Delete the first sentence of the first paragraph of Subsection 703.04.2 on page 612, and substitute the following.

Fine aggregate, defined as material passing the No. 8 sieve, shall be material resulting from the crushing of limestone, steel slag, granite, concrete, or combination thereof.

Delete the third paragraph of Subsection 703.04.2 on page 612.

907-703.04.3--Gradation. In the table of Subsection 703.04.3 on page 613, change the requirement for the 1-inch sieve under Size No. 825 B from "75 - 98" to "75 - 100".

After the table in Subsection 703.04.3 on page 613, add the following.

If crushed concrete is used, the crushed material shall meet the gradation requirements of Size No. 825 B with the exception that the percent passing by weight of the No. 200 sieve shall be 2 – 18.

907-703.06--Aggregates for Hot Mix Asphalt.

907-703.06.1--Coarse Aggregates. Delete the third paragraph of Subsection 703.06.1 on page 613, and substitute the following.

When tested in accordance with AASHTO Designation: T 19, the dry rodded unit weight of all aggregates except expanded clay and shale shall not be less than 70 pounds per cubic foot.

907-703.06.1.2--Fine Aggregates. Delete the last sentence of Subsection 703.06.1.2 on page 614.

907-703.14--Aggregates for Bituminous Surface Treatments.

907-703.14.2--Detail Requirements.

907-703.14.2.1--Gradation. In the table entitled "Gradation Requirements For Cover Aggregate" in Subsection 703.14.2.1 on page 622, delete the requirement for the No. 16 sieve for Size No. 7 under the column "Slag or Expanded Clay".

Delete Subsection 703.19 on page 624, and substitute the following.

907-703.19--Lightweight Aggregate for Concrete.

907-703.19.1--Lightweight Aggregate for Structural Concrete. Lightweight aggregate for structural concrete shall meet the requirements of AASHTO Designation: M 195.

907-703.19.2--Lightweight Aggregate for Internal Curing of Concrete. Lightweight aggregate for internal curing of concrete shall meet the requirements of ASTM Designation: C 1761. The lightweight aggregate shall meet the gradation requirements listed in Table 1 for either "9.5 mm to 2.36 mm (3/8 in. to No. 8)" Coarse aggregate, "9.5 mm to 0 (3/8 in. to 0)" Combined fine and coarse aggregate, or "4.75 mm to 0 (No. 4 to 0)" Fine aggregate. The fineness modulus of the lightweight aggregate shall not be less than 2.70.

907-703.20--Aggregate for Stabilizer.

907-703.20.3--Gradation. Delete the table and notes in Subsection 703.20.3 at the top of page 626, and substitute the following.

PERCENT PASSING BY WEIGHT

Square Mesh Sieves	Shell	Coarse			Medium	Fine
		Size I	Size II Note (1)	Size III Note (3)		
3 inch				100		
2 1/2 inch	90-100			90-100		
2 inch		100				
1 1/2 inch		90-100	100	25-60		
1 inch		80-100	97-100			
3/4 inch		55-100	55-100	0-10		
1/2 inch		35-85	35-85	0-5	100	
3/8 inch		12-65	12-65		97-100	
No. 4, Note (2)		0-30	0-30		92-100	
No. 10		0-8	0-8		80-100	100
No. 40					10-40	80-100
No. 60					0-20	30-100
No. 100						15-80
No. 200	0-5	0-4	0-4		0-5	0-30
PI Material Passing No. 40					6 or less	0

Note (1): Size II is intended for use in bases in which portland cement is used.
Note (2): Ground shell shall contain at least 97% passing the No. 4 sieve.
Note (3): Size III is intended for use in stabilized construction entrances.

MISSISSIPPI DEPARTMENT OF TRANSPORTATION

SPECIAL PROVISION NO. 907-708-6 **CODE: (IS)**

DATE: 05/01/2013

SUBJECT: Non-Metal Drainage Structures

Section 708, Non-Metal Structures and Cattlepasses, of the 2004 Edition of the Mississippi Standard Specifications for Road and Bridge Construction is hereby amended as follows.

907-708.02.1.2--Fly Ash. In the first sentence of Subsection 708.02.1.2 on page 639, change "20 percent" to "25%".

907-708.02.1.4--Coarse Aggregate. Delete the last sentence of Subsection 708.02.1.4 on page 639.

907-708.02.3.2--Marking. Delete the second sentence of Subsection 708.02.3.2 on page 640, and substitute the following.

Machine made pipe shall be marked in accordance with one of the following methods: 1) the pipe shall be inscribed on the outside of the pipe and stenciled on the inside of the pipe, or 2) the pipe shall be inscribed on the inside of the pipe, only. All other pipe may be stenciled.

907-708.17--Corrugated Plastic Pipe Culverts.

907-708.17.1--Corrugated Polyethylene Pipe Culverts. Delete the first sentence of the first paragraph of Subsection 708.17.1 on page 645 and substitute the following.

Corrugated polyethylene pipe shall conform to the requirements of AASHTO Designation: M 294, Type S and/or SP, as applicable, and shall have soil tight joints, unless otherwise specified.

Delete the last sentence of the second paragraph of Subsection 708.17.1 on page 645.

After Subsection 708.17.1 on page 645, add the following.

907-708.17.1.1--Inspection and Final Acceptance of Corrugated Polyethylene Pipe Culverts. Approximately 50% of the installed length of corrugated polyethylene pipe shall be inspected for excess deflection no sooner than 30 days after the embankment material over the pipe is placed to the required subgrade elevation or the maximum required fill height. The inspection shall be performed using either electronic deflectometers, calibrated television or video cameras, or a "go, no-go" mandrel that has an effective diameter of 95% of the nominal inside diameter of the pipe.

Pipe found to have deflection values greater than 5% shall be removed and replaced at no cost to the State.

907-708.17.2--Corrugated Poly (Vinyl Chloride) (PVC) Pipe Culverts. Delete the first sentence of the first paragraph of Subsection 708.17.2 on page 645 and substitute the following.

Corrugated poly (vinyl chloride) (PVC) pipe shall conform to the requirements of AASHTO Designation: M 304 and shall have soil tight joints, unless otherwise specified. Non-perforated PVC pipe used in underdrains shall either be manufactured with an ultra-violet light inhibitor or be fully coated with an ultra-violet light inhibitor.

After Subsection 708.17.2 on page 645, add the following.

907-708.17.2.1--Inspection and Final Acceptance of Poly (Vinyl Chloride) (PVC) Pipe Culverts. Approximately 50% of the installed length of PVC pipe shall be inspected for excess deflection no sooner than 30 days after the embankment material over the pipe is placed to the required subgrade elevation or the maximum required fill height. The inspection shall be performed using either electronic deflectometers, calibrated television or video cameras, or a "go, no-go" mandrel that has an effective diameter of 95% of the nominal inside diameter of the pipe.

Pipe found to have deflection values greater than 5% shall be removed and replaced at no cost to the State.

907-708.18--Sewer Pipe Used for Underdrains.

907-708.18.1--General. After the second paragraph of Subsection 708.18.1 on page 645 add the following.

In lieu of the pipe listed in this subsection, pipe meeting the requirements of Subsection 708.19 may also be used for plastic underdrain pipe.

907-708.18.3--Type PSM Poly (Vinyl Chloride) (PVC) Sewer Pipe. After the first sentence of Subsection 708.18.3 on page 645, add the following.

Non-perforated PVC pipe shall either be manufactured with an ultra-violet light inhibitor or be fully coated with an ultra-violet light inhibitor.

907-708.18.4--Poly (Vinyl Chloride) (PVC) Corrugated Sewer Pipe. Delete the paragraph in Subsection 708.18.4 on page 645 and substitute the following.

This pipe shall conform to the following requirements. For pipe sizes less than or equal to six inches (≤ 6"), the pipe shall be Class PS46 meeting the requirements of AASHTO Designation: M 278. For pipe sizes greater than six inches (> 6"), the pipe shall meet the requirements of AASHTO Designation: M 304. Non-perforated PVC pipe shall either be manufactured with an ultra-violet light inhibitor or be fully coated with an ultra-violet light inhibitor.

Delete Subsection 708.19 on page 645 and substitute the following.

907-708.19--Corrugated Polyethylene Pipe. This pipe shall be high density polyethylene pipe or drainage tubing meet the requirements of AASHTO Designation: M 294, Type S or SP, or AASHTO Designation: M 252, Type S or Type SP, as applicable.

907-708.22.2--Exceptions to AASHTO. Delete the sixth paragraph of Subsection 708.22.2 on page 647.

MISSISSIPPI DEPARTMENT OF TRANSPORTATION

SPECIAL PROVISION NO. 907-709-1 **CODE: (IS)**

DATE: 05/05/2008

SUBJECT: Metal Pipe

Section 709, Metal Pipe, of the 2004 Edition of the Mississippi Standard Specifications for Road and Bridge Construction is hereby amended as follows:

After Subsection 709.02 on page 649, add the following:

907-709.02.1--Aluminized Corrugated Metal Culvert Pipe and Pipe Arches. All aluminized metal pipe and arches shall be manufactured from Type 2 corrugated metal pipe and arches in accordance with the requirements of Subsection 709.02.

907-709.03--Bituminous Coated Corrugated Metal pipe and Pipe Arches.

907-709.03.1--Materials. Delete the first sentence of the first paragraph of Subsection 709.03.1 on page 649, and substitute the following:

Bituminous coated corrugated metal pipe and arches shall conform to the requirements of AASHTO Designation: M 190 and be completely coated inside and out with an asphalt cement which will meet the performance requirements hereinafter set forth.

907-709.05--Polymer Coated Corrugated Metal Pipe and Pipe Arches. Delete the first sentence of the first paragraph of Subsection 709.05 on pages 649 and 650, and substitute the following:

Polymer coated corrugated metal pipe and arches shall conform to the requirements of AASHTO Designation: M 245, except the minimum gauge thickness shall be as shown on the plans or in the contract; however, corrugated metal pipe manufactured from sheets thicker than that specified will be acceptable when approved by the Engineer. The internal diameter of corrugated metal pipe will be determined by inside measurement between the crests of the corrugations. Corrugations greater than 3" x 1" will not be allowed in arch pipe.

907-709.06--Corrugated Metal Pipe for Underdrains. Delete the sentence in Subsection 709.06 on page 650, and substitute the following:

Corrugated metal pipe shall conform to AASHTO Designation: M 36, Type III. Type I pipe which has been perforated to permit the in-flow or out-flow of water may be used in lieu of Type III pipe.

907-709.06.1--Aluminized Corrugated Metal Culvert Pipe For Underdrains. All aluminized corrugated metal pipe for underdrains shall be manufactured from Type 2 corrugated metal pipe

and arches in accordance with the requirements of AASHTO Designation: M 36, Type III. Manufacturer must repair any damaged coating caused from perforating the pipe.

907-709.07--Bituminous Coated Corrugated Metal Pipe for Underdrains. Delete the sentence in Subsection 709.07 on page 650, and substitute the following:

Bituminous coated corrugated metal pipe shall conform to the requirements of AASHTO Designation: M 190, Type A with a bituminous coating applied in accordance with the requirements of Subsection 709.03. Manufacturer must repair any damaged coating caused from perforating the pipe.

907-709.08--Polymer Coated Corrugated Metal Pipe for Underdrains. Delete the sentence in Subsection 709.08 on page 650, and substitute the following:

The metal pipe for underdrains shall conform to the requirements of AASHTO Designation: M 245, Type III and the polymer coating shall conform to the requirements of Subsection 709.05. Type I pipe which has been perforated to permit the in-flow or out-flow of water may be used in lieu of Type III pipe. Manufacturer must repair any damaged coating caused from perforating the pipe.

907-709.09--Corrugated Aluminum Alloy Culvert Pipe and Arches. Delete the first sentence in Subsection 709.09 on page 650, and substitute the following:

Corrugated aluminum culvert pipe and arches shall conform to the requirements of AASHTO Designation: M l96, Type IA.

907-709.10--Corrugated Aluminum Alloy Pipe for Underdrains. Delete the first sentence in Subsection 709.10 on page 650, and substitute the following:

Corrugated aluminum pipe underdrains shall conform to the requirements of AASHTO Designation: M 196, Type III. Type I pipe which has been perforated to permit the in-flow or out-flow of water may be used in lieu of Type III pipe.

907-709.11--Bituminous Coated Corrugated Aluminum Alloy Culvert Pipe and Arches. Delete the sentence in Subsection 709.11 on page 650, and substitute the following:

Bituminous coated aluminum culvert pipe and arches shall conform to AASHTO Designation: M 196, Type IA, and in addition shall be coated inside and out as specified in Subsection 709.03. Manufacturer must repair any damaged coating caused from perforating the pipe.

907-709.13--Bituminous Coated Corrugated Aluminum Alloy Pipe for Underdrains. Delete the sentence in Subsection 709.13 on page 650, and substitute the following:

This pipe shall conform to AASHTO Designation: M 196, Type III, and shall be coated with bituminous material conforming to AASHTO Designation: M 190, type coating as specified. Manufacturer must repair any damaged coating caused from perforating the pipe.

MISSISSIPPI DEPARTMENT OF TRANSPORTATION

SPECIAL PROVISION NO. 907-710-1 **CODE: (SP)**

DATE: 06/24/10

SUBJECT: Fast Dry Solvent Traffic Paint

Section 710, Paint, of the 2004 Edition of the Mississippi Standard Specifications for Road and Bridge Construction is amended as follows:

After Subsection 710.05 on Page 661, add the following:

907-710.06--Fast Dry Solvent Traffic Paint. Fast dry solvent traffic paints intended for use under this specification shall include products that are single packaged and ready mixed. Upon curing, these materials shall produce an adherent, reflective pavement marking capable of resisting deformation by traffic. The manufacturer shall have the option of formulating the material according to their own specifications. However, the requirements delineated in this specification, Section 619 and Section 710 shall apply regardless of the formulation used. The material shall be free from all skins, dirt and foreign objects.

907-710.06.1--Composition.

907-710.06.1.1--Percent Pigment. The percent pigment by weight shall be not less than 51% nor more than 58% when tested in accordance with ASTM D 3723.

907-710.06.1.2--Viscosity. The consistency of the paint shall be not less than 75 nor more than 95 Krebs Units (KU) when tested in accordance with ASTM D 562.

907-710.06.1.3--Weight per Gallon. The paint shall weigh a minimum 11.8 pounds per gallon and the weight of the production batches shall not vary more than +/- 0.5 pounds per gallon from the weight of the qualification samples when tested in accordance with ASTM D 1475.

907-710.06.1.4--Total Solids. The percent of total solids shall not be less than 70% by weight when tested in accordance with ASTM D 2369.

907-710.06.1.5--Dry Time (No pick-up). The paint shall dry to a no tracking condition in a maximum of 10 minutes.

907-710.06.1.6--Volatile Organic Content. The volatile organic content (VOC) shall contain a maximum of 1.25 pounds of volatile organic matter per gallon of total non-volatile paint material when tested in accordance with ASTM D 3960.

907-710.06.1.7--Bleeding. The paint shall have a minimum bleeding ratio of 0.95 when tested in accordance with Federal Specification TT-P-115D.

907-710.06.1.8--Color. The initial daytime chromaticity for yellow materials shall fall within the box created by the following coordinates:

Initial Daytime Chromaticity Coordinates (Corner Points)

	1	2	3	4
x	0.53	0.51	0.455	0.472
y	0.456	0.485	0.444	0.4

The initial daytime chromaticity of white materials shall fall within the box created by the following coordinates:

Initial Daytime Chromaticity Coordinates (Corner Points)

	1	2	3	4
x	0.355	0.305	0.285	0.355
y	0.355	0.305	0.325	0.375

907-710.06.2--Environmental Requirements. All yellow materials using lead chromate pigments shall meet the criteria of non-hazardous waste as defined by 40 CFR 261.24 when tested in accordance with EPA Test Method 1311, Toxicity Characteristics Leaching Procedures (TCLP). The striping and marking material , upon preparation and installation, shall not exude fumes which are toxic, or detrimental to persons or property. All material using lead free pigments shall NOT contain either lead or other Resource Conservation and Recovery Act (RCCA) materials in excess of the standard defined by EPA Method 3050 and 6010.

907-710.06.3--Acceptance Procedures. Acceptance of all fast dry solvent based traffics paint will be based on the Manufacturer's Certification and Certified Test Results. The Contractor shall furnish the Engineer with three copies of the manufacturer's certification stating that each lot of material in a shipment complies with the requirements of this contract. In addition, the Contractor shall provide Certified Test Reports for all tests required by this specification. The test results shall be representative of the material contained with the shipment.

MISSISSIPPI DEPARTMENT OF TRANSPORTATION

SPECIAL PROVISION NO. 907-711-4 **CODE: (IS)**

DATE: 06/26/2009

SUBJECT: Synthetic Structural Fiber Reinforcement

Section 711, Reinforcement and Wire Rope, of the 2004 Edition of the Mississippi Standard Specifications for Road and Bridge Construction is hereby amended as follows:

After Subsection 711.03.4.3 on page 665, add the following:

907-711.04--Synthetic Structural Fiber. The synthetic structural fibers shall be approved for listing in the Department's "Approved Sources of Materials" prior to use. The synthetic structural fibers shall be added to the concrete and mixed in accordance with the manufacturer's recommended methods.

907-711.04.1--Material Properties. The fibers shall meet the requirements of ASTM Designation: C 1116, Section 4.1.3. The fibers shall be made of polypropylene, polypropylene/polyethylene blend, nylon, or polyvinyl alcohol (PVA).

907-711.04.2--Minimum Dosage Rate. The dosage rate shall be such that the average residual strength ratio ($R_{150,3.0}$) of fiber reinforced concrete beams is a minimum of 20.0 percent when the beams are tested in accordance with ASTM Designation: C 1609. The dosage rate for fibers shall be determined by the following.

The fiber manufacturer shall have the fibers tested by an acceptable, independent laboratory acceptable to the Department and regularly inspected by the Cement and Concrete Reference Laboratory of the National Institutes of Standards and Technology and approved to perform ASTM Designations: C 39, C 78, and C192.

The laboratory shall test the fibers following the requirements of ASTM Designation: C 1609 in a minimum of three (3) test specimens cast from the same batch of concrete, molded in 6 x 6 x 20-inch standard beam molds meeting the requirements of ASTM Designation: C 31. The beams shall be tested on an 18-inch span. The tests for $R_{150,3.0}$ shall be performed when the average compressive strength of concrete used to cast the beams is between 3500 and 4500 psi. The tests for compressive strength shall follow the requirements of ASTM Designation: C 39. The average compressive strength shall be determined from a minimum of two (2) compressive strength cylinders.

The value for $R_{150,3}$ shall be determined using the following equation:

$$R_{150,3.0} = \frac{f_{150,3.0}}{f_1} \times 100$$

The residual flexural strength ($f_{150,3.0}$) shall be determined using the following equation:

$$f_{150,3.0} = \frac{P_{150,3.0} \times L}{b \times d^2}$$

where:

$f_{150,3.0}$ is the residual flexural strength at the midspan deflection of L/150, (psi),
$P_{150,3.0}$ is the residual load capacity at the midspan deflection of L/150, (lbf),
L is the span, (in),
b is the width of the specimen at the fracture, (in), and
d is the depth of the specimen at the fracture, (in).

For a 6 x 6 x 20-inch beam, the $P_{150,3.0}$ shall be measured at a midspan deflection of 0.12 inch.

Additionally, $R_{150,3.0}$, $f_{150,3.0}$, and $P_{150,3.0}$ may also be referred to as R_{150}^{150}, f_{150}^{150}, and P_{150}^{150} respectively.

At the dosage rate required to achieve the minimum $R_{150,3}$, the mixture shall both be workable and the fibers shall not form clumps.

The manufacturer shall submit to the State Materials Engineer certified test reports from the independent laboratory showing the test results of each test specimen.

907-711.04.3--Job Control Requirements. The synthetic structural fibers shall be one from the Department's "Approved Sources of Materials."

At the required dosage rate, the mixture shall both be workable and the fibers shall not form clumps to the satisfaction of the Engineer. If the mixture is determined by the Engineer to not be workable or have clumps of fibers, the mixture may be rejected.

MISSISSIPPI DEPARTMENT OF TRANSPORTATION

SPECIAL PROVISION NO. 907-713-6 **CODE: (SP)**

DATE: 03/17/2016

SUBJECT: Admixtures for Concrete

Section 713, Concrete Curing Materials and Admixtures, of the 2004 Edition of the Mississippi Standard Specifications for Road and Bridge Construction is hereby amended as follows.

After the second paragraph of Subsection 713.01.2 on page 676, add the following.

Type 1-D compound may be used on bridge rails, median barriers, and other structures requiring a spray finish. When Type 1-D compound is used, it will be the responsibility of the Contractor to assure that the compound has dissipated from the structure prior to applying the spray finish and that the spray finish adheres soundly to the structure.

Delete Subsection 713.02 on pages 676 & 677, and substitute the following.

907-713.02--Admixtures for Concrete. Air-entraining admixtures used in Portland cement concrete shall comply with AASHTO Designation: M 154. Set-retarding, accelerating, and/or water-reducing admixtures shall comply with AASHTO Designation: M 194. Water-reducing admixture shall meet the minimum requirements for Type A. Set-retarding admixtures shall meet the minimum requirements for Type D. Admixtures providing a specific performance characteristic(s) other than those of water reduction or set retardation shall meet the minimum requirements for Type S. For admixtures meeting the requirements for Type S, the manufacturer shall provide data to substantiate the specific performance characteristic(s) to the satisfaction of the State Materials Engineer.

In order to obtain approval of an admixture, the State Materials Engineer shall have been furnished certified test reports, made by an acceptable independent laboratory regularly inspected by the Cement and Concrete Reference Laboratory of the National Institutes of Standards and Technology, which show that the admixture meets all the requirements of the applicable AASHTO Standard Specification.

The Department reserves the right to sample, for check tests, any shipment or lot of admixture delivered to a project.

The Department reserves the right to require tests of the material to be furnished, using the specific cement and aggregates proposed for use on the project, as suggested in AASHTO Designation: M 154 and outlined in AASHTO Designation: M 194.

After an admixture has been approved, the Contractor shall submit to the State Materials Engineer, with each new lot of material shipped, a certification from the manufacturer in accordance with the requirements of Subsection 700.05.1 and stating the material is of the same composition as

originally approved and has not been changed or altered in any way. The requirement in Subsection 700.05.1(b) is not required on the certification from the manufacturer.

Admixtures containing chlorides will not be permitted.

Failure to maintain compliance with any requirement of these specifications shall be cause for rejection of any previously approved source or brand of admixture.

Admixtures shall only be used in accordance with the manufacturer's recommended dosage range as set forth in the manufacturer's approval request correspondence. When an admixture is used in Portland cement concrete, it shall be the responsibility of the Contractor to produce satisfactory results.

907-713.02.1--Source Approval. In order to obtain approval of an admixture, the Producer/Suppliers shall submit to the State Materials Engineer the following for review: certified test reports, made by an acceptable independent laboratory regularly inspected by the Cement and Concrete Reference Laboratory of the National Institutes of Standards and Technology, which show that the admixture meets all the requirements of the applicable AASHTO or Department Specification for the specific type and the dosage range for the specific type of admixture.

907-713.02.2--Specific Requirements. Admixtures containing chlorides will not be permitted.

907-713.02.3--Acceptance. The Department reserves the right to sample, for check tests, any shipment or lot of admixture delivered to a project.

The Department reserves the right to require tests of the material to be furnished, using the specific cement and aggregates proposed for use on the project, as suggested in AASHTO Designation: M 154 and outlined in AASHTO Designation: M 194.

Failure to maintain compliance with any requirement of these specifications shall be cause for rejection of any previously approved source or brand of admixture.

With each new lot of material shipped the Contractor shall submit to the State Materials Engineer, a notarized certification from the manufacturer showing that the material complies with the requirements of the applicable AASHTO or Department Specification.

When an admixture is used, it shall be the responsibility of the Contractor to produce satisfactory results.

907-713.02.4--Waterproofing Admixture. This product is used as a waterproofing admixture for cast in place concrete bridge decks and bridge deck topping.

The Contractor shall submit manufacturer's product data and installation methods for each type of the products required to demonstrate the product complies with specifications.

The materials shall be installed in accordance with manufacturer's instructions.

The waterproofing admixture shall be one of the following, or an approved equal.

- Xypex Admix
- Everdure Caltite
- Hycrete W1000

The dosage rate for the above admixtures shall be as follows:

- Xypex Admix shall be 15 pounds per cubic yard.
- Everdure Caltite shall be a minimum of 1.5% by weight of cement.
- Hycrete W1000 shall be a minimum one (1) gallon per cubic yard.

Any retardation of set that occurs will depend upon the concrete mix design and the dosage rate of the admixture.

MISSISSIPPI DEPARTMENT OF TRANSPORTATION

SPECIAL PROVISION NO. 907-714-8 **CODE: (IS)**

DATE: 05/01/2013

SUBJECT: Miscellaneous Materials

Section 714, Miscellaneous Materials, of the 2004 Edition of the Mississippi Standard Specifications for Road and Bridge Construction is hereby amended as follows.

907-714.05--Fly Ash. Delete Subsections 714.05.1 & 714.05.2 on pages 680 & 681, and substitute the following.

907-714.05.1--General. The fly ash source must be approved for listing in the Department's "Approved Sources of Materials" prior to use. The acceptance of fly ash shall be based on certified test reports, certification of shipment from the supplier, and tests performed on samples obtained after delivery in accordance with the Department's Materials Division Inspection, Testing, and Certification Manual and Department SOP.

Different classes of fly ash or different sources of the same class shall not be mixed or used in the construction of a structure or unit of a structure without written permission from the Engineer.

The Contractor shall provide suitable means for storing and protecting the fly ash from dampness. Separate storage silos, bins, or containers shall be provided for fly ash. Fly ash which has become partially set or contains lumps of caked fly ash shall not be used.

The temperature of the bulk fly ash shall not be greater than 165°F at the time of incorporation into the work.

All classes of fly ash shall meet the supplementary option chemical requirement for available alkalies listed in AASHTO Designation: M 295, Table 2. Class F fly ash shall have a calcium oxide (CaO) content of less than 6.0%. Class C fly ash shall have a CaO content of greater than or equal to 8.0%.

The replacement of Portland cement with fly ash shall be in accordance with the applicable replacement content specified in Subsection 907-701.02.2.

In addition to these requirements, fly ash shall meet the following specific requirements for the intended use.

907-714.05.2--Fly Ash for Use in Concrete. When used with Portland cement in the production of concrete or grout, the fly ash shall meet the requirements of AASHTO Designation: M 295, Class C or F, with the following exception:

The loss on ignition shall not exceed 6.0 percent.

No additional cementitious materials, such as blended hydraulic cement, GGBFS, metakaolin, or others, shall be added to or as a replacement for Portland cement when used with fly ash.

907-714.06--Ground Granulated Blast Furnace Slag (GGBFS). Delete Subsection 714.06.1 on page 681, and substitute the following.

907-714.06.1--General. The GGBFS source must be approved for listing in the Department's "Approved Sources of Materials" prior to use. The acceptance of GGBFS shall be based on certified test reports, certification of shipment from the supplier, and tests performed on samples obtained after delivery in accordance with the Department's Materials Division Inspection, Testing, and Certification Manual and Department SOP.

The Contractor shall provide suitable means for storing and protecting the GGBFS against dampness and contamination. Separate storage silos, bins, or containers shall be provided for GGBFS. GGBFS which has become partially set, caked or contains lumps shall not be used.

The State Materials Engineer shall be notified in writing of the nature, amount and identity of any processing or other additions made to the GGBFS during production.

GGBFS from different mills shall not be mixed or used alternately in any one class of construction or structure without written permission from the Engineer; except that this requirement will not be applicable to cement treatment of design soils or bases.

No additional cementitious materials, such as blended hydraulic cement, fly ash, metakaolin, or others, shall be added to or as a replacement for Portland cement when used with GGBFS in the production of concrete. The replacement of Portland cement with GGBFS shall be in accordance with the applicable replacement content specified in Subsection 907-701.02.2.

Delete Subsection 714.07 on page 682, and substitute the following.

907-714.07--Additional Cementitious Materials.

907-714.07.1--Metakaolin.

907-714.07.1.1--General. Metakaolin shall only be used as a supplementary cementitious material in Portland cement concrete for compliance with the requirements for cementitious materials exposed to soluble sulfate conditions. Metakaolin from different sources shall not be mixed or used alternately in any one class of construction or structure without written permission from the Engineer. No additional cementitious materials, such as blended hydraulic cement, fly ash, GGBFS, or others, shall be added to or as a replacement for Portland cement when used with metakaolin in the production of concrete.

The State Materials Engineer shall be notified in writing of the nature, amount and identity of any processing, or other additions made to the metakaolin during production.

907-714.07.1.2--Source Approval. The approval of each metakaolin source shall be on a case

by case basis as determined by the State Materials Engineer. In order to obtain approval of a metakaolin source, the Producer/Suppliers shall submit to the State Materials Engineer the following for review: certified test reports, made by an acceptable, independent laboratory regularly inspected by the Cement and Concrete Reference Laboratory of the National Institutes of Standards and Technology, which show that the metakaolin meets all the requirements of AASHTO Designation: M295, including the Effectiveness in contributing to sulfate resistance, Procedure A, listed in AASHTO Designation: M295, Table 4 for Supplementary Optional Physical Requirements, and other requirements listed herein.

In order to demonstrate effectiveness in contributing to sulfate resistance, included in this test data shall be results of metakaolin from the proposed source tested in accordance with ASTM Designation: C 1012. There shall be two sets of test specimens per the following:

a. One set of test specimens shall be prepared using a Type I Portland cement meeting the requirements of AASHTO Designation: M85 and having a tricalcium aluminate (C_3A) content of more than 8.0%,

b. One set of test specimens shall be prepared using a Type II Portland cement meeting the requirements of AASHTO Designation: M85.

c. The proposed metakaolin shall be incorporated at the rate of 10% cement replacement in each set of test specimens and shall meet both of the acceptance criteria listed below for source approval.

The requirement for acceptance of the test sample using Type I Portland cement is an expansion of 0.10% or less at the end of six months. The requirement for acceptance of the test sample using Type II Portland cement is an expansion of 0.05% or less at the end of six months.

907-714.07.1.3--Storage. The Contractor shall provide suitable means for storing and protecting the metakaolin against dampness and contamination. Metakaolin which has become partially set, caked, or contains lumps shall not be used.

907-714.07.1.4--Specific Requirements. Metakaolin shall meet the requirements of AASHTO Designation: M 295, Class N with the following modifications:

1. The sum of SiO_2 + Al_2O_3 + Fe_2O_3 shall be at least 85%. The Material Safety Data Sheet shall indicate that the amount of crystalline silica, as measured by National Institute of Occupation Safety and Health (NIOSH) 7500 method, after removal of the mica interference, is less than 1.0%.
2. The loss on ignition shall be less than 3.0%.
3. The available alkalies, as equivalent Na_2O, shall not exceed 1.0%.
4. The amount of material retained on a No. 325 mesh sieve shall not exceed 1.0%.
5. The strength activity index at seven (7) days shall be at least 85%.

907-714.07.1.5--Acceptance. With each new lot of material shipped the Contractor shall submit to the State Materials Engineer a certified test report from the manufacturer showing that the material meets the requirements AASHTO Designation: M295, Class N and the requirements of this Subsection.

The Department reserves the right to sample, for check tests, any shipment or lot of metakaolin delivered to a project.

907-714.07.2--Silica Fume.

907-714.07.2.1--General. Silica fume shall only be used as a supplementary cementitious material in Portland cement concrete for compliance with the requirements for cementitious materials exposed to soluble sulfate conditions. Silica fume from different sources shall not be mixed or used alternately in any one class of construction or structure without written permission from the Engineer. No additional cementitious materials, such as blended hydraulic cement, performance hydraulic cement, fly ash, GGBFS, or others, shall be added to or as a replacement for Portland cement when used with silica fume in the production of concrete.

The State Materials Engineer shall be notified in writing of the nature, amount and identity of any processing, or other additions made to the silica fume during production.

907-714.07.2.2--Source Approval. The approval of each silica fume source shall be on a case by case basis as determined by the State Materials Engineer. In order to obtain approval of a silica fume source, the Producer/Suppliers shall submit to the State Materials Engineer the following for review: certified test reports, made by an acceptable, independent laboratory regularly inspected by the Cement and Concrete Reference Laboratory of the National Institutes of Standards and Technology, which show that the silica fume meets all the requirements of AASHTO Designation: M307, Table 3, including the Sulfate resistance expansion, listed in the table for Optional Physical Requirements, and other requirements listed herein.

In order to demonstrate effectiveness in contributing to sulfate resistance, included in this test data shall be results of silica fume from the proposed source tested in accordance with ASTM Designation: C 1012. There shall be two sets of test specimens per the following:

a. One set of test specimens shall be prepared using a Type I Portland cement meeting the requirements of AASHTO Designation: M85 and having a tricalcium aluminate (C_3A) content of more than 8.0%,

b. One set of test specimens shall be prepared using a Type II Portland cement meeting the requirements of AASHTO Designation: M85.

c. The proposed silica fume shall be incorporated at the rate of 8% cement replacement in each set of test specimens and shall meet both of the acceptance criteria listed below for source approval.

The requirement for acceptance of the test sample using Type I Portland cement is an expansion of 0.10% or less at the end of six months. The requirement for acceptance of the test sample using Type II Portland cement is an expansion of 0.05% or less at the end of six months.

907-714.07.2.3--Storage. The Contractor shall provide suitable means for storing and protecting the silica fume against dampness and contamination. Silica fume which has become partially set, caked, or contains lumps shall not be used.

907-714.07.2.4--Acceptance. With each new lot of material shipped, the Contractor shall submit to the State Materials Engineer a certified test report from the manufacturer showing that the material meets the Chemical and Physical Requirements of AASHTO Designation: M307.

The Department reserves the right to sample, for check tests, any shipment or lot of silica fume delivered to a project.

Delete Subsection 714.11.6 on pages 690 and 691, and substitute the following.

907-714.11.6--Rapid Setting Cementitious Patching Compounds for Concrete Repair. Rapid setting concrete patching compounds must be approved for listing in the Department's "Approved Sources of Materials" prior to use. Upon approval, a product must be recertified every four (4) years to remain on the "Approved Sources of Materials" list. Each product shall be pre-measured and packaged dry by the manufacturer. All liquid solutions included by the manufacturer as components of the packaged material shall be packaged in a watertight container. The manufacturer may include aggregates in the packaged material or recommend the addition of Contractor furnished aggregates.

The type, size and quantity of aggregates, if any, to be added at the job site shall be in accordance with the manufacturer's recommendations and shall meet the requirements of Subsection 703.02 for fine aggregate and Subsection 703.03 for coarse aggregate. Required mixing water to be added at the job site shall meet the requirements of Subsection 714.01.2.

Only those bonding agents, if any, recommended by the manufacturer of the grout or patching compounds may be used for increasing the bond to old concrete or mortar surfaces.

Patching compounds containing soluble chlorides will not be permitted when in contact with steel.

Site preparation, proportioning of materials, mixing, placing and curing shall be performed in accordance with the manufacturer's recommendation for the specific type of application, and the Contractor shall furnish a copy of these recommendations to the Engineer.

Rapid setting cementitious concrete patching compounds, including components to be added at the job site, shall conform to the following physical requirements:

Non-shrink cementitious grouts shall not be permitted for use.

Compressive strength shall equal or exceed 3000 psi in 24 hours in accordance with ASTM C 928 for Type R2 concrete or mortar.

Bond strength shall equal or exceed 1000 psi in 24 hours in accordance with ASTM C 928 for Type R2 concrete or mortar.

The material shall have a maximum length change of ±0.15% in accordance with ASTM C 928 for Type R2 concrete or mortar.

The Contractor shall furnish to the Engineer three copies of the manufacturer's certified test report(s) showing results of all required tests and certification that the material meets the specifications when mixed and place in accordance with the manufacturer's instructions. When the mixture is to be placed in contact with steel, the certification shall further state that the packaged material contains no chlorides. Certified test report(s) and certification shall be furnished for each lot in a shipment.

The proportioning of materials must be approved by the State Materials Engineer and any subsequent change in proportioning must also be approved. A sample of each component shall be submitted to the Engineer along with the quantity or percentage of each to be blended. At least 45 days must be allowed for initial approval.

The proportioning of materials for subsequent lots may be approved by the State Materials Engineer upon receipt of certification from the manufacturer that the new lot of material is the same composition as that originally approved by the Department and that the material has not been changed or altered in any way.

907-714.11.7--Commercial Grout for Anchoring Doweled Tie Bars in Concrete. Before Subsection 714.11.7.1 on page 691, add the following.

Approved Non-"Fast Set" Epoxy anchor systems as specified below may be used for the repair of concrete pavements that do not involve permanent sustained tension applications or overhead applications.

"***Fast Set Epoxy***" may not be used for any Adhesive Anchor Applications. Adhesive Anchor Systems (Fast Set epoxy or otherwise) shall not be used for permanent sustained tension applications or overhead applications. "Fast Set Epoxy" refers to an epoxy produced by the Sika Corporation called Sikadur AnchorFix-3 and repackaged for sale under a variety of names/companies listed at the Federal Highway Administration web site at the following link:

http://www.fhwa.dot.gov/Bridge/adhesives.cfm

907-714.11.7.4--Acceptance Procedure. After the last sentence of the first paragraph of Subsection 714.11.4 on page 691, add the following.

Upon approval, a product must be recertified every four (4) years to remain on the "Approved Sources of Materials" list.

907-714.11.8--Epoxy Joint Repair System.

907-714.11.8.1--General. After the last sentence of the first paragraph of Subsection 714.11.8.1 on page 692, add the following.

Upon approval, a product must be recertified every four (4) years to remain on the "Approved Sources of Materials" list.

MISSISSIPPI DEPARTMENT OF TRANSPORTATION

SPECIAL PROVISION NO. 907-715-4 **CODE: (IS)**

DATE: 05/01/2013

SUBJECT: Roadside Development Materials

Section 715, Roadside Development Materials, of the 2004 Edition of the Mississippi Standard Specifications for Road and Bridge Construction is hereby amended as follows.

907-715-02.2.1--Agricultural Limestone. Delete the first sentence of Subsection 715-02.2.1 on page 704 and substitute the following.

Agricultural limestone shall be either a hard-rock limestone material or a marl or chalk agricultural liming material as addressed in the latest amendment to the Mississippi Agricultural Liming Material Act of 1993, published by the Mississippi Department of Agriculture and Commerce.

907-715.02.2.1.1--Screening Requirements. Delete the first sentence of Subsection 715.02.2.1.1 on page 704.

Delete Subsection 715.02.2.1.2 on page 704 and substitute the following.

907-715-02.2.1.2--Calcium Carbonate Equivalent. Marl or chalk liming material shall not have less than 70% calcium and magnesium carbonate calculated as calcium carbonate equivalent when expressed on a dry weight basis.

907-715-02.2.1.3--Neutralizing Values. Hard-rock limestone material shall have a minimum Relative Neutralizing Value (RNV) of 63.0%, which is determined as follows.

% RNV = CCE x (% passing #10 mesh + % passing #50 mesh)/2

Where: CCE = Calcium Carbonate Equivalent

907-715.03--Seed.

907-715.03.2--Germination and Purity Requirements. Add the following to Table B on page 705.

Name (Kind)	Name (Variety)	Percent Germination	Percent Purity
GRASSES			
Rye Grass	Annual	80	98
Wheat	-	80	98

MISSISSIPPI DEPARTMENT OF TRANSPORTATION

SPECIAL PROVISION NO. 907-720-2 **CODE: (IS)**

DATE: **05/01/2013**

SUBJECT: **Pavement Marking Materials**

Section 720, Pavement Marking Materials, of the 2004 Edition of the Mississippi Standard Specifications for Road and Bridge Construction is hereby amended as follows.

907-720.01--Glass Beads. After the first sentence of Subsection 720.01 on page 729, add the following.

The glass beads shall contain no more than 200 ppm (mg/kg) total concentration for lead, arsenic, or antimony. The manufacture shall furnish the Engineer with a certified test report indicating that the glass beads meet the above requirement.

907-720.02--Thermoplastic Pavement Markings. Delete the first paragraph of Subsection 720.02 on page 730 and substitute the following.

The thermoplastic material shall be lead free and conform to AASHTO Designation: M 249 except the glass beads shall be moisture resistant coated.

After the first sentence of the second paragraph of Subsection 720.02 on page 730, add the following.

In addition, the certification for the thermoplastic material shall state that the material is lead free.

MISSISSIPPI DEPARTMENT OF TRANSPORTATION

SUPPLEMENT TO SPECIAL PROVISION NO. 907-804-19

DATE: 03/22/2016

SUBJECT: Concrete Bridges and Structures

Delete the second and third paragraphs of Subsection 907.804.03.16.2 on page 37, and substitute the following.

For bridge decks when the ambient temperature is above 90°F, the forms, reinforcing steel, steel beam flanges, and other surfaces which will come in contact with the concrete shall be cooled to below 90°F by means of a water spray or other approved methods. Additionally, when the atmospheric temperature is predicted to be 90°F or above based on the latest information available from the National Weather Service any time during the day of placement or day after placement, the time of placement shall not begin until 5:00 p.m. on the day of placement and shall be completed by 6:00 a.m. the following day.

MISSISSIPPI DEPARTMENT OF TRANSPORTATION

SPECIAL PROVISION NO. 907-804-19 **CODE: (SP)**

DATE: **11/10/2015**

SUBJECT: **Concrete Bridges and Structures**

Section 804, Concrete Bridges and Structures, of the 2004 Edition of the Mississippi Standard Specifications for Road and Bridge Construction is hereby deleted and replaced as follows.

SECTION 907-804--CONCRETE BRIDGES AND STRUCTURES

907-804.01--Description. This work consists of constructing concrete bridges and structures in accordance with these specifications and in reasonably close conformity with the dimensions, designs, lines, and grades indicated on the plans or established.

Construction of box bridges shall be in accordance with Sections 601 and 602.

907-804.02--Materials.

907-804.02.1--General. Concrete produced and controlled from this specification shall be accepted upon proper certification of concrete production through an approved quality control program and verification by job site acceptance criteria. The Contractor shall develop and implement a quality control program which shall be used to maintain the required properties of concrete. For projects with 1000 cubic yards and more, quality control and acceptance shall be achieved through statistical evaluation of test results. For projects of more than 200 but less than 1000 cubic yards, quality control and acceptance shall be achieved by individual test results. For projects less than or equal to 200 cubic yards, refer to the requirements of TMD-20-05-00-000 "Sampling and Testing of Small Quantities of Miscellaneous Materials" for mixture design and testing requirements.

The materials for concrete bridges and structures, when sampled and tested in accordance with Subsection 700.03, shall meet the requirements of the following Subsections:

Portland Cement ..... 701.01 and 701.02
Blended Cement ..... 907-701.01 and 907-701.04
Admixtures 713.02
Fly Ash 714.05
Ground Granulated Blast Furnace Slag (GGBFS) 907-714.06
Silica Fume 907-714.07.2
Water ..... 714.01.1 and 714.01.2
Fine Aggregate 703.02
Coarse Aggregate 703.03
Lightweight Aggregate 907-703.19
Curing Materials 713.01

Joint Materials ..... 707.01, 707.02, and 707.07
Structural Steel Joints and Bearing Devices 717.01
Bearing Pads 714.10
Wire Rope or Wire Cable for Prestressed Concrete ..... 700.01 and 711.03
Sprayed Finish for Concrete Surface 714.12
Reinforcing Steel 711.02

907-804.02.2--Use, Care, and Handling. The use, care, and handling of materials shall conform to the applicable requirements of Subsection 501.03.10 and the specific requirements of Subsections 907-804.02.4 and 907-804.02.5. Unless otherwise authorized, only fine aggregate or coarse aggregate of one type and from the same source shall be used in the construction of any one unit of a structure. Should the Contractor, with written permission of the Engineer, elect to substitute high early strength cement for cement of the type specified, the Contractor will not receive additional compensation for the substitution.

907-804.02.3--Blank.

907-804.02.4--Care and Storage of Concrete Aggregates. The handling and storage of aggregates shall be such as to prevent segregation or contamination with foreign materials. The Engineer may require that aggregates be stored on separate platforms at satisfactory locations.

When specified, coarse aggregates shall be separated into two or more sizes in order to secure greater uniformity of the concrete mixture. Different sizes of aggregate shall be stored in separate stock piles sufficiently removed from each other to prevent the material at the edges of the piles from becoming intermixed.

907-804.02.5--Storage of Cementitious Materials. All cementitious materials shall be stored in suitable weather-proof buildings or bins. These buildings or bins shall be placed in locations approved by the Engineer. Provision for storage shall be ample, and the shipments of cementitious materials as received shall be stored separately or other provisions made to the satisfaction of the Engineer for easy access for the identification, inspection, and sampling of each shipment as deemed desirable. Stored cementitious materials shall meet the test requirements at any time after storage when a retest is ordered by the Engineer.

On small jobs, open storage consisting of a raised platform and ample waterproof covering may be permitted by written authorization from the Engineer.

When specified, the Contractor shall keep accurate records of deliveries of cementitious materials and of their use in the work. Copies of these records shall be supplied in the form required by the Engineer.

907-804.02.6--Classification and Uses of Concrete. When a specific class of concrete is not specified on the plans or in the contract documents, the structure or parts thereof shall be constructed with the class of concrete as directed by the Engineer.

The classes and their uses are as follows:

(1) Class AA - Concrete for bridge construction and concrete exposed to seawater.
(2) Class A - Concrete shown as Class A shall herein be classified as and required to meet the performance criteria of Class AA.
(3) Class B - General use, heavily reinforced sections, cast-in-place concrete piles, and conventional concrete piles.
(4) Class C - Massive sections or lightly reinforced sections.
(5) Class D - Massive unreinforced sections and riprap.
(6) Class F - Concrete for prestressed members.
(7) Class FX - Extra strength concrete for prestressed members, as shown on plans.
(8) Class S - For all seal concrete deposited under water.
(9) Class DS - Drilled Shaft

907-804.02.7--Blank.

907-804.02.8--Laboratory Accreditation. The Contractor shall be responsible for furnishing the laboratory used to perform concrete quality control tests. The laboratory may be the Contractor's facility, the concrete producer's facility, or a certified independent testing laboratory.

Only laboratories certified by the Mississippi Department of Transportation are qualified to perform material testing. Certification by AASHTO Accreditation Program (AAP) will be acceptable if the laboratory is listed in the latest AAP publication and maintains accreditation to completion of concrete work.

The Contractor's laboratory designated for quality control testing shall have equipment necessary to test aggregates and concrete for the test methods listed in Table 1.

Table 1

AASHTO: R 39	Making and Curing Concrete Test Specimens in the Laboratory
AASHTO: R 60	Sampling Freshly Mixed Concrete
AASHTO: T 2	Sampling Aggregates
AASHTO: T 19	Bulk Density ("Unit Weight") and Voids in Aggregates
AASHTO: T 22	Compressive Strength of Cylindrical Concrete Specimens
AASHTO: T 23	Making and Curing Concrete Test Specimens in the Field
AASHTO: T 27	Sieve Analysis of Fine and Coarse Aggregates
AASHTO: T 84	Specific Gravity and Absorption of Fine Aggregate
AASHTO: T 85	Specific Gravity and Absorption of Coarse Aggregate
AASHTO: T 119	Slump of Hydraulic Cement Concrete
AASHTO: T 121	Density (Unit Weight), Yield, and Air Content (Gravimetric) of Concrete
AASHTO: T 152	Air Content of Freshly Mixed Concrete by Pressure Method *
AASHTO: T 196	Air Content of Freshly Mixed Concrete by the Volumetric Method *
AASHTO: T 231	Capping Cylindrical Concrete Specimens
AASHTO: T 248	Reducing Field Samples of Aggregate to Testing Size
AASHTO: T 255	Total Evaporable Moisture Content of Aggregate by Drying

AASHTO: T 325	Standard Method of Test for Estimating the Strength of Concrete in Transportation Construction by Maturity Tests **
ASTM: C 1064	Standard Test Method for Temperature of Freshly Mixed Hydraulic Cement Concrete
ASTM: C 1074	Standard Practice for Estimating Concrete Strength by the Maturity Method **

* Equipment necessary for either pressure or volumetric air content.
** Equipment necessary for estimating concrete strength following the maturity method.

Testing equipment shall have been inspected by the Department or through the AASHTO Accreditation Program. Testing equipment calibration files shall be made available upon request by the Department.

907-804.02.9--Testing Personnel. Technicians testing portland cement concrete, for either acceptance or production control purposes, shall be certified by an accepted certification program. Recertification is required for each Class after five years. Certification requirements are listed in Table 2.

Table 2

Concrete Technician's Tasks	Test Method Required	Certification Required**
Sampling or Testing of Plastic Concrete	AASHTO Designation: R 60, T 23, T 119, T 121, T 152, T 196, and ASTM Designation: C 1064	MDOT Class I certification
Compressive Strength Testing of Concrete Cylinders	AASHTO Designation: T 22 and T 231	MDOT Concrete Strength Testing Technician certification
Sampling of Aggregates	AASHTO Designation: T 2	Work under the supervision of a MDOT Class II certified technician
Testing of Aggregates	AASHTO Designation: T 19, T 27, T 84, T 85, T 248, and T 255	MDOT Class II certification
Proportioning of Concrete Mixtures*	AASHTO Designation: M 157 and R 39	MDOT Class III certification
Interpretation and Application of Maturity Meter Readings	AASHTO Designation: T 325 and ASTM Designation: C 1074	MDOT Class III certification or Two hours maturity method training

* Technicians making concrete test specimens for meeting the requirements of Subsection 907-804.02.10.1.2 shall be MDOT Class I certified and under the direct supervision of an MDOT Class III certified technician.

** MDOT Class I certification encompasses the same test procedures and specifications as ACI Concrete Field Testing Technician-Grade I. MDOT Class II certification encompasses the same test procedures and specifications as ACI Aggregate Testing Technician-Level 1. MDOT Concrete Strength Testing Technician encompasses the same test procedures and specifications as ACI Concrete Strength Testing certification.

Specific requirements for each level of certification are in the latest edition of the Department's *Concrete Field Manual*. Current MDOT Class I, MDOT Class II, and/or MDOT Class III certifications shall be acceptable until those certifications expire. Upon expiration of a current certification, recertification with the certifications listed in Table 2 shall be required. Technicians performing either specific gravity testing of aggregates or compressive strength tests shall be required to either:

- have the required MDOT certification listed in Table 2, or
- have a current MDOT Class III certification or work under the direct supervision of current MDOT Class III technician, and have demonstrated the specific gravity and/or compressive strength test during the inspection of laboratory equipment by the Materials Division, Concrete Section.

907-804.02.10--Portland Cement Concrete Mixture Design. At least 10 days prior to production of concrete, the Contractor shall submit to the Engineer proposed concrete mixture designs complying with the Department's *Concrete Field Manual*. Materials shall be from approved sources meeting the requirements of the Standard Specifications. Proportions for the mixture designs shall be for the class concrete required by the contract plans and shall meet the requirements of the "Master Proportion Table for Structural Concrete Design" listed in Table 3. The concrete producer shall assign a permanent unique mixture number to each mixture design. Each mixture design shall be field verified as required in Subsection 907-804.02.10.3. Acceptable field verification data shall be required for final approval of a mixture design.

All concrete mixture designs will be reviewed by the Materials Division prior to use. Concrete mixture designs disapproved will be returned to the Contractor with a statement explaining the disapproval.

If the Contractor chooses to cure the concrete in accordance with the requirements listed under **Length of Time Defined by Development of Compressive Strength** in Subsection 907-804.03.17, the compressive strength/maturity relationship shall be developed for the mixture design for a minimum of 28 days following the requirements of Subsection 907-804.03.15. The compressive strength/maturity relationship information shall be submitted with the mixture design information.

Table 3
MASTER PROPORTION TABLE FOR STRUCTURAL CONCRETE DESIGN

Class	Coarse Aggregate Size No.*	Maximum Water/ Cementitious** Ratio	Specified Compressive Strength (f'_c) psi	Maximum Permitted Slump*** inches	Nominal Total Air Content**** %
AA*****	57 or 67	0.45**	4000	3***	4.5****
B	57 or 67	0.50	3500	4	4.5
C	57 or 67	0.55	3000	4	4.5
D	57 or 67	0.70	2000	4	4.5
F	67	0.40	5000	3	******
FX	67	(As per mixture design)	(As shown on plans)	3	******
S	57 or 67	0.45	3000	8	4.5
DS	67	0.45	4000	***	******

* Maximum size aggregate shall conform to the concrete mixture design for the specified aggregate. Other smaller coarse aggregate sizes meeting the requirements of Subsection 907-703.03.2.4 may also be used in conjunction with the coarse aggregate sizes listed. Lightweight aggregate (LWA) meeting the requirements of Subsection 907-703.19.2 may also be used as a partial replacement for fine aggregate.

** The replacement limits of portland cement by weight by other cementitious materials (such as fly ash, GGBFS, silica fume, or others) shall be in accordance with the values in Subsection 907-701.02. Other hydraulic cements may be used in accordance with the specifications listed in Section 701.

For Class AA concrete for concrete bridge decks, the water / cementitious ratio range shall be 0.43 – 0.45 and the maximum cementitious material content shall be 550 pounds per cubic yard. The "maximum cementitious material content" refers to the total weight of Portland cement, blended hydraulic cement, GGBFS, silica fume, and fly ash.

*** Unless otherwise specified, minus slump requirements shall meet those set forth in Table 3 of AASHTO Designation: M157.

For Class AA concrete for concrete bridge decks the maximum permitted slump may be increased to five (5) inches. Also, for each additional pound of fibers per cubic yard added in excess of the requirement in Note *****, an additional inch of slump will be allowed up to a maximum permitted slump of eight (8) inches.

For Class AA not used in bridge decks and all other Classes of concrete, the maximum permitted slump may be increased to eight (8) inches.

For Class DS concrete for drilled shafts the slump range shall be 8 inches ±1 inch.

**** The tolerance on total air content shall be ±1.5%. For Class AA concrete for concrete bridge decks, the nominal total air content may be increased to 6.5%.

***** For Class AA concrete for concrete bridge decks, an approved synthetic structural fiber meeting the requirements of Special Provision 907-711, Synthetic Structural Fiber Reinforcement, shall be incorporated into the mixture at 1.25 times the approved dosage rate.

****** Entrained air is not required except for concrete exposed to seawater. For concrete not exposed to seawater, the total air content shall not exceed 6.0%. For concrete exposed to seawater, the nominal total air content shall be 4.5%.

At least one water-reducing admixture or water-reducing/set-retarding admixture shall be used in all classes of concrete in accordance with the manufacturer's recommended dosage range. Admixtures providing a specific performance characteristic other than those of water reduction or set retardation may be used in accordance with the manufacturer's recommended dosage range. Mixture designs containing accelerating admixtures will not be approved. Any combinations of admixtures shall be approved by the Engineer before their use.

907-804.02.10.1--Proportioning of Portland Cement Concrete Mixture Design. Proportioning of portland cement concrete shall be based on an existing mixture of which the producer has field experience and documentation or based on a recently batched laboratory mixture tested according to the required specifications.

907-804.02.10.1.1--Proportioning on the Basis of Previous Field Experience of Trial Mixtures. Where a concrete production facility has a record, based on at least 10 consecutive strength tests from at least 10 different batches within the past 12 months from a mixture not previously used on Department projects, the standard deviation shall be calculated. The record of tests from which the standard deviation is calculated shall:

a) Represent similar materials and conditions to those expected. Changes in materials and proportions within the test record shall not have been more closely restricted than those for the proposed work.

b) Represent concrete produced to meet a specified strength.

c) Consist of 10 consecutive tests, average of two cylinders per test, tested at 28 days.

The standard deviation, s , shall be calculated as:

$$s = \left[\sum \left(X_i - \overline{X}\right)^2 \div \left(N - 1\right)\right]^{1/2}$$

where:

X_i = the strength result of an individual test
$\overline{X}$ = the average of individual tests in the series
N = number of tests in the series

When the concrete production facility does not have a record of tests for calculation of standard deviation, as required in the above formula, the requirements of Subsection 907-804.02.10.1.2 shall govern.

The required average compressive strength (f'_{cr}) used as the basis for selection of concrete proportions shall conform to the inequality listed below, while using a standard deviation, s, calculated as shown above.

$$\overline{X} \geq f'_{cr}$$

where:

$$f'_{cr} = f'_c + 1.43s$$

where:

f'_c = specified compressive strength of concrete, psi
f'_{cr} = required average compressive strength of concrete, psi
s = standard deviation, psi

1.43 represents the Lower Quality Index necessary to assure that 93% of compressive strength tests are above f'_c.

907-804.02.10.1.2--Proportioning on the Basis of Laboratory Trial Mixtures. When an acceptable record of field test results is not available, concrete proportions shall be established based on laboratory trial mixtures meeting the following restrictions:

a) The combination of materials shall be those intended for use in the proposed work.

b) Trial mixtures having proportions and consistencies suitable for the proposed work shall be made using the ACI 211.1 as a guide to proportion the mixture design.

c) Trial mixtures shall be designed to produce a slump within ±3/4 inch of the maximum permitted, and for air-entrained concrete, ±0.5 percent of the maximum total air content. The temperature of freshly mixed concrete in trial mixtures shall be reported.

d) For each proposed mixture, at least three compressive test cylinders shall be made and cured in accordance with AASHTO Designation: R 39. Each change of water-cement ratio shall be considered a new mixture. The cylinders shall be tested for strength in accordance with AASHTO Designation: T 22 and shall be tested at 28 days.

e) The required average strength of laboratory trial mixes shall exceed f'_c by 1200 psi for concrete mixture designs less than 5000 psi and by 1400 psi for concrete mixture designs of 5000 psi or more.

f) The laboratory trial batch mixtures shall have been made within the previous 12 months before being submitted for approval and shall not have been previously used on Department projects.

907-804.02.10.2--Documentation of Average Strength. Documentation that the proposed concrete proportions will produce an average strength equal to or greater than the required average shall consist of the strength test records from field tests or results from laboratory trial mixtures.

907-804.02.10.3--Field Verification of Concrete Mixture Design. Concrete mixture designs will only be tentatively approved pending field verification. The requirements for yield, slump, or total air content shall be successfully met within the first three (3) production days. Mixture designs may be transferred to other projects without additional field verification testing, once the mixture design has passed the field verification process.

The Contractor's Certified Quality Control Technicians shall test each concrete mixture design upon the first placement of the mix. Aggregates and concrete tests during the first placement shall be as follows.

Aggregates	Concrete
Bulk Specific Gravity	Water Content
Moisture	Slump
Gradation	Air Content
	Unit Weight
	Yield

For all Classes of concrete, the mixture shall be verified to yield within 2.0% of the correct volume when all the mix water is added to the batch.

For all Classes of concrete other than DS, F, and FX, the mixture shall produce a slump within a minus 1½-inch tolerance of the maximum permitted for mixtures with a maximum permitted slump of three inches (3") or less or within a minus 2½-inch tolerance of the maximum permitted for mixtures with a maximum permitted slump of greater than three inches (3"), and producing a total air content within a minus 1½ percent tolerance of the maximum allowable air content in Table 3.

For Class DS, the slump shall be within the requirements in Note *** below Table 3. For Class DS exposed to seawater, the total air content shall be within a minus 1½ percent tolerance of the maximum allowable air content in Note ****** below Table 3. For Class DS not exposed to seawater the total air content shall be within the requirements in Note ****** below Table 3.

For Classes F and FX, the slump shall be within a minus 1½-inch tolerance of the maximum permitted for mixtures with a maximum permitted slump of three inches (3") or less or within a minus 2½-inch tolerance of the maximum permitted for mixtures with a maximum permitted slump of greater than three inches (3"). For Classes F and FX exposed to seawater, the total air content shall be within a minus 1½ percent tolerance of the maximum allowable air content in

Note ****** below Table 3. For Classes F and FX not exposed to seawater the total air content shall be within the requirements in Note ****** below Table 3.

The mixture shall be adjusted and retested, if necessary, on subsequent placements until the above mentioned properties are met.

If the requirements for yield, slump, or total air content are not met within the first three (3) production days, subsequent field verification testing shall not be permitted on Department projects, and the mixture design shall not be used until the requirements listed above are met. Any mixture design adjustments, changes in the mixture proportions, are to be made by a Class III Certified Technician representing the Contractor. After the mixture design has been verified and adjustments made, verification test results will be reviewed by the Engineer.

907-804.02.10.3.1--Slump Retention of Class DS Concrete Mixture Designs. Prior to concrete placement, the Contractor shall provide test results of a slump loss test using approved methods to demonstrate that the mixture meets the four hour requirement in Subsection 907-803.02.7.1. These tests shall be conducted successfully by an approved testing laboratory within 30 days prior to installation of the trial shaft, with personnel from the Materials Division present. The slump loss test shall be conducted at temperatures and conditions similar to those expected at the job site at the time of the installation of the trial shaft. The sample for the slump loss test shall be from a minimum batch size of four (4) cubic yards of concrete. If the time between the previous successful slump loss test and the installation of the trial shaft exceeds 30 days, another successful slump loss test shall be performed on the first truckload of concrete as part of the installation of the trial shaft. This requirement limiting the time between the previous slump loss test and an installation of the trial shaft also applies to Class DS concrete mixture designs being transferred from another project. During any shaft installation a slump loss test shall be conducted by the Contractor at the direction of the Engineer from the concrete at the site for verification of slump loss requirements using a sample from a minimum batch size of four cubic yards of concrete.

907-804.02.10.4--Adjustments of Mixtures. The mixture design may be adjusted by the Class III Certified Technician representing the Contractor in accordance with the allowable revisions listed in the Department's *Concrete Field Manual*, paragraph 5.7. Written notification shall be submitted to the Engineer a minimum of seven (7) days prior to any source or brand of material change, aggregate size change, allowable material type change, or decrease in any cementitious material content. Any adjustments of the concrete mixture design shall necessitate repeat of field verification procedure as described in Subsection 907-804.02.10.3 and approval by the Engineer.

907-804.02.11--Concrete Batch Plants. The concrete batch plant shall meet the requirements of the National Ready Mixed Concrete Association *Quality Control Manual, Section 3, Plant Certification Checklist* as outlined in the latest edition of the Department's *Concrete Field Manual*. The Contractor shall submit a copy of the approved checklist along with proof of calibration of batching equipment, i.e., scales, water meter, and admixture dispenser, to the Engineer 30 days prior to the production of concrete.

For projects with 1000 cubic yards and more, the concrete batch plant shall meet the requirements for an automatic system capable of recording batch weights. It shall also have automatic moisture

compensation for the fine aggregate. For projects of more than 200 but less than 1000 cubic yards the plant can be equipped for manual batching with a fine aggregate moisture meter visible to the plant operator.

The concrete batch plant shall have available adequate facilities to cool concrete during hot weather.

Mixer trucks to be used on the project are to be listed in the checklist and shall meet the requirements of the checklist.

907-804.02.12--Contractor's Quality Control. The Contractor shall provide and maintain a quality control program that will provide reasonable assurance that all materials and products submitted to the Department for acceptance will conform to the contract requirements, whether manufactured or processed by the Contractor or procured from suppliers, subcontractors, or vendors.

The Contractor's Quality Control program shall implement the minimum quality control requirements shown in Table 4, "CONTRACTOR'S MINIMUM REQUIREMENTS FOR QUALITY CONTROL". The quality control activities shown in the table are considered to be normal activities necessary to control the production and placing of a given product or material at an acceptable quality level. To facilitate the Department's activities, all completed gradation samples shall be retained for a maximum of sixty (60) days by the Contractor until further disposition is designated by the Department.

The Contractor shall perform, or have performed, the tests required to substantiate product conformance to contract document requirements and shall also perform, or have performed, all tests otherwise required.

The Contractor's Quality Control program shall encompass the requirements of AASHTO Designation: M 157 into concrete production and control, equipment requirements, testing, and batch ticket information. The requirement of AASHTO Designation: M 157, Section 11.7 shall be followed except, on arrival to the job site, a maximum of 1½ gallons per cubic yard shall be allowed to be added. Water shall not be added at a later time. Job site adjustment of a batch using chemical admixtures or the mechanical adjustment of a batch may be performed by the Contractor if the requirements of Subsection 907-804.02.12.1.1 have been satisfactorily addressed in the Quality Control Plan. If either the maximum permitted slump is exceeded or the total air content is not within the required range after all adjustments are made at the job site, the concrete shall be rejected.

The Contractor's quality control tests shall be documented and shall be available for review by the Engineer throughout the life of the contract.

As set out in these specifications, quality control sampling and testing performed by the Contractor will be used by the Department for determination of acceptability of the concrete.

The Contractor shall maintain standard equipment and qualified personnel as required to assure conformance to contract requirements.

907-804.02.12.1--Quality Control Plan. The Contractor shall prepare a Quality Control Plan which shall identify the personnel responsible for the Contractor's quality control including the company official who will act as liaison with Department personnel. The Quality Control Plan shall be submitted in writing to the Engineer for approval 30 days prior to the production of concrete.

The class(es) of concrete involved will be listed separately. If an existing mixture design(s) is to be used, the mixture design number(s) as previously approved shall be listed.

It is intended that sampling and testing be in accordance with standard methods and procedures, and that measuring and testing equipment be standard and properly calibrated. If alternative sampling methods and procedures, and inspection equipment are to be used, they shall be detailed in the Quality Control Plan.

907-804.02.12.1.1--Elements of Plan. The Plan shall address all elements that affect the quality of the structural concrete including, but not limited to, the following items:

1) Stockpile Management
2) Procedures for Corrective Actions for Non Compliance of Specifications
3) Procedure for Controlling Concrete Temperatures
4) Job Site Batch Adjustments by Addition of Chemical Admixtures:

   The Plan shall address if the Contractor intends to adjust either the slump and/or total air content of a batch on the job site by adding chemical admixture(s) to a batch. The Contractor shall include the names of the personnel designated to perform this batch adjustment, the equipment used to add the chemical admixture(s), and the procedure by which the batch adjustment will be accomplished. Only the Contractor's designated personnel shall adjust a batch. Only calibrated dispensing equipment shall be used to add chemical admixture(s) to a batch. Only the procedure described in this section of the Plan shall be utilized.

   If either the maximum permitted slump is exceeded or the total air content is not within the required range after all adjustments are made at the job site, the concrete shall be rejected.

   If the Contractor elects to utilize Job Site Batch Adjustments by Addition of Chemical Admixture within Item 2, Procedures for Corrective Actions for Non Compliance of Specifications, to adjust batches which do not meet the minimum specification requirements for slump and/or total air content, no more than three batches on any one project shall be allowed to be adjusted regardless of the number of mixtures associated with the project.

5) Construction of Concrete Bridge Decks, including the following:

- the description of the equipment used for placing concrete on the bridge deck in accordance with Subsection 907-804.03.6 and, as applicable, Subsections 907-804.03.7 and 907-804.03.8 including any accessories added to the pump to ensure the entrained air in the concrete mixture remains entrained during pumping and depositing of the concrete mixture,
- the description of and the number of pieces of equipment used to consolidate the concrete in accordance with Subsection 907-804.03.6.2,
- the description of the equipment used to finish the bridge deck in accordance with Subsection 907-804.03.19.7,
- the plan for ensuring a continuous rate of finishing the bridge deck without delaying the application of curing materials within the time specified in Subsection 907-804.03.17, including ensuring a continuous supply of concrete throughout the placement with an adequate quantity of concrete to complete the deck and filling diaphragms and end walls in advance of deck placement,
- the plan for applying the curing materials within the time specified in Subsection 907-804.03.17,
- the description of the powered fogging equipment in accordance with Subsection 907-804.03.17,
- a sample of the documentation used as the daily inspection report for ensuring maintenance of the continuous wet curing in accordance with Subsection 907-804.03.17, as required,
- the description of the equipment used to apply the liquid membrane, including but not limited to, the nozzles, pumping/pressurization equipment, and liquid membrane tanks, in accordance with Subsection 907-804.03.17,
- the method for determining the rate of applied liquid membrane meets the application rate requirements in accordance with Subsection 907-804.03.17,
- a sample of the documentation used for the application rate verification of the liquid membrane in accordance with Subsection 907-804.03.17.

6) Mechanical Adjustment of Trucks

907-804.02.12.2--Personnel Requirements. The Contractor's Designated Certified Technician shall perform and use quality control tests and other quality control practices to assure that delivered materials and proportioning meet the requirements of the mixture design including temperature, slump, air content, and strength and shall periodically inspect all equipment used in transporting, proportioning, and mixing.

The Contractor's Designated Technician shall periodically inspect all equipment used placing, consolidating, finishing, and curing to assure it is operating properly and that placement, consolidation, finishing, and curing conform to the mixture design and other contract requirements.

907-804.02.12.3--Documentation. The Contractor shall maintain adequate records of all inspections and tests. The records shall indicate the nature and number of observations made, the number and type of deficiencies found, date and time of samples taken, the quantities approved and rejected, and the nature of corrective action taken as appropriate. The Contractor's

documentation procedures will be subject to approval of the Department prior to the start of the work and to compliance checks during the progress of the work.

All conforming and non-conforming results shall be kept complete and shall be available at all times to the Department during the performance of the work. Forms shall be on a computer-acceptable medium. Batch tickets and gradation data shall be documented in accordance with Department requirements.

Batch tickets shall contain all the information in AASHTO Designation: M157, Section 16 including the additional information in Subsection 16.2 with the following exception: the information listed in paragraphs 16.2.7 and 16.2.8 is not required. All material added to a batch by both the batch plant or added manually shall be documented on the ticket. Batch tickets shall also contain the concrete producer's permanent unique mixture number assigned to the concrete mixture design. Copies shall be submitted to the Department as the work progresses.

Test data for portland cement concrete, including gradation, shall be charted in accordance with the applicable requirements.

The Contractor may use additional control charts as deemed appropriate. It is normally expected that testing and charting will be completed within 24 hours after sampling.

All records documenting the Contractor's quality control tests shall become the property of the Department upon completion of the work.

907-804.02.12.4--Corrective Action. The Contractor shall take prompt action to correct conditions that have resulted, or could result, in the submission to the Department of materials and products that do not conform to the requirements of the contract documents. All corrective actions shall be documented.

907-804.02.12.5--Non-Conforming Materials. The Contractor shall establish and maintain an effective and positive system for controlling non-conforming material, including procedures for its identification, isolation and disposition. Reclaiming or reworking of non-conforming materials shall be in accordance with procedures acceptable to the Department.

All non-conforming materials and products shall be positively identified to prevent use, shipment, and intermingling with conforming materials and products. Holding areas, mutually agreeable to the Department and the Contractor, shall be provided by the Contractor.

TABLE 4
CONTRACTOR'S MINIMUM REQUIREMENTS FOR QUALITY CONTROL

Portland Cement Concrete		
Control Requirement	**Frequency**	**AASHTO/ASTM Designation**
A. PLANT AND TRUCKS		
1. Mixer Blades	Monthly	
2. Scales		
a. Tared	Daily	
b. Calibrate	Every 6 months	
c. Check Calibration	Weekly	
3. Gauges & Meters - Plant & Truck		
a. Calibrate	Every 6 months	
b. Check Calibration	Weekly	
4. Admixture Dispenser		
a. Calibrate	Every 6 months	
b. Check Operation & Calibration	Daily	
B. AGGREGATES		
1. Sampling		T 2
2. Fine Aggregate		
a. Gradation / FM	250 yd^3 concrete	T 27
b. Moisture	Check meter against test results weekly 2500 yd^3 concrete	T 255
c. Specific Gravity / Absorption		T 84
3. Coarse Aggregates		
a. Gradation	250 yd^3 concrete	T 27
b. Moisture	Minimum of once daily or more as needed to control production. Check meter against test results weekly.	T 255
c. Specific Gravity / Absorption	2500 yd^3 Concrete	T 85
C. PLASTIC CONCRETE		
1. Sampling		T 141
2. Air Content	First load then one per 50 yd^3	T 152 or T 196
3. Slump	First load then one per 50 yd^3	T 119
4. Compressive Strength	A minimum of one set (three cylinders) for each 100 yd^3 inclusive and one set for each additional 100 yd^3 or fraction thereof for each class concrete delivered and placed on a calendar day from a single supplier. A test shall be the average of three cylinders.	T 22, T 23, T 231
5. Yield	Each 400 yd^3	T 121
6. Temperature	With each sample	C 1064

907-804.02.13--Quality Assurance Sampling and Testing. Quality Assurance (QA) inspection and testing will be provided by the Department to assure that the Contractor's Quality Control (QC) testing meets the requirements of these specifications.

Acceptance of the material is based on the inspection of the construction, monitoring of the Contractor's QC program, QC and QA test results per Subsection 907-804.02.13.1, and the comparison of the QA test results with the QC test results. The Department may use the results of the Contractor's QC tests as a part of the acceptance procedures instead of the results of QA tests, provided:

a) The Department's inspection and monitoring activities indicate that the Contractor is following the approved QC program and, respectively,
b) For aggregates, the results from the Contractor's QC and the Department's QA testing of aggregate gradations compare by both meeting the aggregate type's gradation requirements;
c) For concrete, the Contractor's QC and Department's QA testing of concrete compressive strengths compare when using the data comparison computer program with an alpha value of 0.01 for projects with 1000 cubic yards and more; or, strength comparisons are within 990 psi for projects of more than 200 but less than 1000 cubic yards.

The minimum frequency for QA testing of aggregate and plastic concrete by the Department will follow the frequencies listed in Table 5, **"**DEPARTMENT'S MINIMUM REQUIREMENTS FOR QUALITY ASSURANCE".

TABLE 5
DEPARTMENT'S MINIMUM REQUIREMENTS FOR QUALITY ASSURANCE

Quality Assurance Tests	Frequency	AASHTO/ASTM Designation
A. AGGREGATES		
1. Sampling		T 2
2. Fine Aggregate Gradation and FM	250 yd^3 concrete	T 27
3. Coarse Aggregates Gradation	250 yd^3 concrete	T 27
B. PLASTIC CONCRETE		
1. Sampling		T 141
2. Air Content	Every 100 yd^3	T 152 or T 196
3. Slump	Every 100 yd^3	T 119
4. Compressive Strength	One set (three cylinders) for every 100 yd^3 inclusive. A test shall be the average of three cylinders.	T 22, T 23, T 231
5. Temperature	With each sample	C 1064

Periodic inspection by the Department of the Contractor's QC testing and production will continue through the duration of the project. Weekly reviews will be made of the Contractor's QC records and charts.

For aggregates, comparison of data of the Contractor's QC aggregate gradation test results to those of the Department's QA aggregate gradation test results will be made monthly during concrete

production periods according to Department Standard Operating Procedures. When it is determined that the Contractor's QC test results of aggregate gradations are comparative to that of the Department's QA test results, then the Department will use the Contractor's QC results as a basis for acceptance of the aggregates and the Department's QA testing frequency of aggregates may be reduced to a frequency of no less than three QA tests to every 10 QC tests. If the Contractor's QC aggregate gradation test results fail to compare to those of the Department's QA aggregate gradation test results, Department testing for aggregate gradations will revert to the frequency shown in Table 5 for aggregates until the Contractor's and Department's aggregate gradation test data compare.

For concrete compressive strength, comparison of data of the Contractor's QC compressive strength test results to those of the Department's QA compressive strength test results will be made monthly during concrete production periods according to Department's *Concrete Field Manual*. When it is determined that the Contractor's QC test results of concrete compressive strengths are comparative to that of the Department's QA test results, then the Department will use the Contractor's QC results as a basis for acceptance of the concrete and the Department's QA testing frequency of concrete compressive strengths may be reduced to a frequency of no less than three QA tests to every 10 QC tests. If the Contractor's QC compressive strength test results fail to compare to those of the Department's QA compressive strength test results, Department testing will revert to the frequency shown in Table 5 for plastic concrete until the Contractor's and Department's compressive strength test data compare.

907-804.02.13.1--Job Control Testing.

907-804.02.13.1.1--Sampling. Sampling of concrete mixture shall be performed in accordance with the latest edition of the Department's *Concrete Field Manual*.

907-804.02.13.1.2--Slump. Slump of plastic concrete shall meet the requirements of Table 3: MASTER PROPORTION TABLE FOR STRUCTURAL CONCRETE DESIGN. A check test shall be made on another portion of the sample before rejection of any load.

907-804.02.13.1.3--Air. Total air content of concrete shall be within the specified range for the class of concrete listed in Table 3: MASTER PROPORTION TABLE FOR STRUCTURAL CONCRETE DESIGN. A check test shall be made on another portion of the sample before rejection of any load.

907-804.02.13.1.4--Yield. If the yield of the concrete mix design is more than plus or minus three percent (±3%) of the designed volume, the mix shall be adjusted by a Class III Certified Technician representing the Contractor to yield the correct volume plus or minus three percent (±3%). If batching of the proportions of the mixture design varies outside the batching tolerance range of the originally approved proportions by more than the tolerances allowed in Subsection 907-804.02.12, the new proportions shall be field verified per Subsection 907-804.02.10.3.

907-804.02.13.1.5--Temperature. Cold weather concreting shall follow the requirements of Subsection 907-804.03.16.1. Hot weather concreting shall follow the requirements of Subsection

907-804.03.16.2. Concrete with a temperature more than the maximum allowable temperature shall be rejected and not used in Department work.

The maximum acceptance temperature for Class DS concrete mixtures is 95°F.

The maximum acceptance temperature of Class C concrete mixtures is 100°F for mixtures meeting the cement replacement requirements of Subsection 907-701.02.2. For Class C concrete mixtures that do not meet the cement replacement requirements of Subsection 907-701.02.2, the maximum acceptance temperature is 95°F.

The maximum acceptance temperature for all other concrete mixtures meeting the cement replacement requirements of Subsection 907-701.02.2 is 95°F. The maximum acceptance temperature for all other concrete mixtures which do not meet the cement replacement requirements of Subsection 907-701.02.2 is 90°F.

907-804.02.13.1.6--Compressive Strength. Standard cured concrete compressive strength tests shall conform to the specified strength (f'_c) listed in the specifications. Concrete represented by compressive strength test below the specified strength (f'_c) may be removed and replaced by the Contractor. If the Contractor elects not to remove the material, it will be evaluated by the Department as to the adequacy for the use intended. All concrete evaluated as unsatisfactory for the intended use shall be removed and replaced by the Contractor at no additional cost to the Department. For concrete allowed to remain in place, reduction in payment will be as follows:

Projects with 1000 Cubic Yards and More. When the evaluation indicates that the work may remain in place, a statistical analysis will be made of the QC and QA concrete test results. If this statistical analysis indicates at least 93% of the material would be expected to have a compressive strength equal to or greater than the specified strength (f'_c) and 99.87% of the material would be expected to have a compressive strength at least one standard deviation above the allowable design stress (f_c), the work will be accepted. If the statistical analysis indicates that either of the two criteria are not met, the Engineer will provide for an adjustment in pay as follows for the material represented by the test result.

Total Pay on Material in Question = Unit Price - (Unit Price x % Reduction)

$$\text{\% Reduction} = \frac{\left(f'_c - X\right)}{f'_c - \left(f_c + s\right)} \times 100 \text{ x M}$$

where:

f'_c = Specified 28-day compressive strength, psi
X = Individual compressive strength below f'_c, psi
s = standard deviation, psi*
f_c = allowable design stress, psi
M = pay reduction multiplier, per the *Concrete Field Manual*, paragraph 7.3

* Standard deviation used in the above reduction of pay formula shall be calculated from the applicable preceding compressive strengths test results plus the individual compressive strength below f'_c. If below f'_c strengths occur during the project's first ten compressive strength tests, the standard deviation shall be calculated from the first ten compressive strength tests results.

Projects of More Than 200 but Less Than 1000 Cubic Yards. When the evaluation indicates that the work may remain in place, a percent reduction in pay will be assessed based on a comparison of the deficient 28-day test result to the specified strength. The Engineer will provide for an adjustment in pay as follows for the material represented by the test result.

Total Pay on Material in Question = Unit Price - (Unit Price x % Reduction)

$$\% \text{ Reduction} = \frac{\left(f'_c - X\right)}{f'_c} \times 100 \text{ x M}$$

where:

$f'c$ = Specified 28-day compressive strength, psi
X = Individual compressive strength below f'c, psi
M = pay reduction multiplier, per the *Concrete Field Manual*, paragraph 7.3

907-804.02.14--Dispute Resolution. Disputes over variations between Contractor's QC test results and the Department's QA test results shall be resolved at the lowest possible level using the latest edition of the Department's *Concrete Field Manual*. When there are significant discrepancies between the QC test results and the QA test results, the Contractor's QC Manager, the Project Engineer, and/or the District Materials Engineer shall look for differences in the procedures, and correct the inappropriate procedure before requesting a third party resolution.

If the dispute cannot be resolved at the project or District level, the Department's Materials Division will serve as a third party to resolve the dispute. The Materials Division's decision shall be binding.

The Contractor shall be responsible for the cost associated with the third party resolution if the final decision is such that the Department's QA test results were correct. Likewise, the Department will be responsible for the cost when the final decision is such that the Contractor's QC test results were correct.

907-804.03--Construction Requirements.

907-804.03.1--Measurement of Materials.

907-804.03.1.1--General. The accuracy for measuring materials shall be in accordance with AASHTO Designation: M 157.

907-804.03.1.2--Measurement by Weighing. Except when otherwise specified or authorized, the materials shall be measured by weighing. The apparatus provided for weighing materials shall be

suitably designed and constructed for this purpose. Cementitious materials and aggregates shall be weighed separately. Cement in standard bags need not be weighed, but bulk cement and other cementitious materials shall be weighed. The mixing water shall be measured by volume or by weight. All measuring devices shall be subject to approval.

907-804.03.2--Blank.

907-804.03.3--Blank.

907-804.03.4--Hand Mixing. Hand mixing of concrete will not be allowed.

907-804.03.5--Delivery. The plant supplying concrete shall have sufficient capacity and transporting apparatus to ensure continuous delivery at the rate required. The rate of delivery shall be such as to provide for the proper continuity in handling, placing, and furnishing of the concrete. The rate shall be such that the interval between batches shall not exceed 20 minutes. The methods of delivering and handling the concrete shall be that which will facilitate placing with minimum re-handling and without damage to the structure or the concrete.

907-804.03.6--Handling and Placing Concrete.

907-804.03.6.1--General. Prior to placing concrete, all reinforcement shall have been accurately placed in the position shown on the plans and fastened as set out in Section 805. All sawdust, chips, and other construction debris and extraneous matter shall have been removed from the interior of the forms. Temporary struts, braces, and stays holding the forms in correct shape and alignment shall be removed when the concrete placing has reached an elevation rendering their service unnecessary. These temporary members shall be entirely removed from the forms and shall not be buried in the concrete.

No concrete shall be placed until the forms and reinforcement have been inspected.

Except as provided for truck mixers and truck agitators, concrete shall be placed in the forms within 30 minutes after the time that the cement is first added to the mixture.

Concrete shall be placed so as to avoid segregation of materials and displacement of reinforcement. The use of troughs, chutes, and pipes over 25 feet in length for gravity conveyance of concrete to the forms, will not be permitted except when authorized by the Engineer and subject to the production of quality concrete.

Only approved mechanical conveyors will be permitted.

Open troughs and chutes shall be metal or metal lined. The use of aluminum pipes, chutes, or other devices made of aluminum that come into direct contact with the concrete shall not be used. Where steep slopes are required, the chutes shall be equipped with baffles or be in short sections that change the direction of movement.

All chutes, troughs, and pipes shall be kept clean and free from coatings of hardened concrete by thoroughly flushing with water after each run. Water used for flushing shall be discharged clear of the structure.

When placing operations involve dropping the concrete more than five feet, it shall be deposited through sheet metal or other approved pipes to prevent segregation and unnecessary splashing. The pipes shall be made in sections to permit discharging and raising as the placement progresses. A non-jointed pipe may be used if sufficient openings of the proper size are provided to allow for the flow of the concrete into the shaft. As far as practicable, the pipes shall be kept full of concrete during placing, and their ends shall be kept buried in the newly placed concrete.

Except as herein provided, concrete shall be placed in horizontal layers not more than 12 inches thick. When, with the Engineer's approval, less than the complete length of a layer is placed in one operation, it shall be terminated in a vertical bulkhead. Each layer shall be placed and compacted before the preceding layer has taken its initial set and shall be compacted so as to avoid the formation of a construction joint with the preceding layer.

If the Department determines that there is an excessive number of projections, swells, ridges, depressions, waves, voids, holes, honeycombs, or other defects in the completed structure, removal of the entire structure may be required as set out in Subsection 105.12.

907-804.03.6.2--Consolidation. Immediately after depositing the concrete mixture, the concrete mixture shall be thoroughly consolidated by the use of approved mechanical vibrators and suitable spading tools. Only concrete mixture which has not achieved initial set shall be consolidated. Hand spading alone will be permitted on small structural members such as railing, small culvert headwalls, and as necessary to ensure smooth surfaces and dense concrete along form surfaces, in corners, and in locations impossible to reach with vibrators. When hand spading is used for consolidation, a sufficient number of workmen with spading tools shall be provided. For hand spading, flush a thin layer of mortar to all the surfaces and thoroughly and satisfactorily consolidate the concrete.

The Contractor shall conduct operations of depositing and consolidating the concrete mixture such that the operation produces concrete which is uniformly smooth and dense, having no honeycombing or pockets of segregated aggregate.

Movement of personnel through the consolidated concrete shall not be permitted. If it is determined it is necessary to step into previously consolidated concrete, the concrete in the stepped into area shall be consolidated again.

907-804.03.6.2.1--Requirements for Vibrators. Mechanical vibrators shall be subject to the following:

1. To verify compliance with these requirements, the Contractor shall provide the Engineer with a copy of the manufacturer's specifications for each type and brand of vibrator used on the project.

2. The Contractor shall provide a sufficient number of personnel with vibrators to properly consolidate each batch immediately after the concrete is placed in the forms. The Contractor shall provide at least one stand-by vibrator and required power source.
3. Concrete having been consolidated shall not be walked in or through. If it is determined it is necessary to step into previously consolidated concrete, the concrete in the stepped into area shall be consolidated again.
4. Internal vibrators shall be of the spud or tube type, meeting the following characteristics and performance:
    a. The diameter of the head of the vibrator shall be 1¼ to 2½ inches.
    b. The frequency of vibration shall be 8000 to 12000 vibrations per minute (Hz) while operating in the concrete.
    c. The average amplitude shall be 0.025 to 0.05 inch while operating in air.
    d. The minimum radius of influence shall be seven (7) inches.
    e. The length of the vibrator head shall be nearly equal to the depth of the layer of concrete placed.
5. When the reinforcing steel is coated with epoxy, internal vibrators with heads of rubber or other resilient material shall be used. Rubber covers securely fastened over steel heads shall be acceptable.
6. For consolidation of concrete used in concrete bridge decks, the following additional requirements shall apply:
    a. Only internal vibration shall be used.
    b. Internal vibrators shall all be of the same type and size.
    c. The configuration of the internal vibrators shall meet the requirements of Subsection 907-804.03.6.2.3.

907-804.03.6.2.2--Operation of Internal Vibration. Mechanical vibrators used for internal vibration shall be operated as follows:

1. Vibrators shall not be dragged or moved laterally through the concrete to transport concrete. Vibrators shall not be used in such a manner that the concrete segregates or forms pockets of grout. Vibrators shall not be applied directly or through the reinforcement to sections or layers of concrete which have taken initial set.
2. Vibrators shall only be inserted into the concrete while operating and at the point of placement to consolidate the concrete for such a length of time that there is a general cessation in the escape of large entrapped air bubbles at the surface.
3. Vibrators shall be inserted slowly into the concrete and allowed to penetrate into the concrete under their own weight.
4. Vibrators shall be inserted into the concrete while they are in a vertical position with enough flexibility to work themselves around the reinforcing steel.
5. The head of the vibrator shall be completely submerged in the concrete for a time of consolidation between 3 and 15 seconds prior to removal, unless otherwise defined by the Engineer.
6. For consolidation of two or more layers of concrete, the vibrator shall be inserted into the bottom most layer at least six (6) inches. The vibrator shall be manipulated in a series of up-and-down motions to knit the layers together.

7. Vibrators shall be removed slowly from the concrete after the consolidation has been accomplished. However, once the head of the vibrator has become only partially immersed in the concrete, vibrators shall be removed rapidly.
8. The insertions of the vibrators shall be systematically spaced such that the entire surface of the concrete comes under the influence of the vibrator during consolidation. This includes areas around the reinforcing steel, imbedded fixtures, the corners and angles of forms, and any irregular areas. The distance between insertions shall not exceed 1.5 times the radius of influence such that the area visibly affected by the vibrator overlaps the adjacent, just-vibrated area.
9. For additional information, refer to ACI 309-07, Chapter 7, Sections 7.1 through 7.3

907-804.03.6.2.3--Method of Consolidation. It is anticipated the Contractor will accomplish consolidation by internal vibration using one of the following two methods: vibrators mounted on a mechanical device or an orchestrated effort utilizing personnel. Regardless of the chosen method, the method shall be included in the QCP in accordance with Subsection 907-804.02.12.1.1.5 and shall only receive tentative approval until the method is demonstrated as effectively meeting the requirements of Subsection 907-804.03.6.2.

907-804.03.6.3--Discontinuance of Placing. When placing is temporarily discontinued, the concrete, after becoming firm enough to retain its form, shall be cleaned of laitance and other objectionable material to a sufficient depth to expose sound concrete. To avoid visible joints insofar as possible upon exposed faces, the top surface of the concrete adjacent to the forms shall be smoothed with a trowel. Where a "feather edge" might be produced at a construction joint, such as in the sloped top surface of a wing wall, an inset form work shall be used in the preceding layer to produce a blocked out portion that will provide an edge thickness of at least six inches (6") in the succeeding layer. Work shall not be discontinued within 18 inches of the top of any face unless provision has been made for a coping less than 18 inches thick. In this case and if permitted by the Engineer, the construction joint may be made at the underside of the coping.

Immediately following the discontinuance of placing concrete, all accumulations of mortar splashed on the reinforcement and the surface of forms shall be removed. Dried mortar chips and dust shall not be puddled into the unset concrete. If the accumulations are not removed prior to the concrete becoming set, care shall be exercised not to break or injure the concrete-steel bond at and near the surface of the concrete while cleaning the reinforcement. After initial set the forms shall not be jarred, and no strain shall be placed on the ends of projecting reinforcement until the concrete has sufficiently set to ensure against any damage by such jarring or strain.

907-804.03.6.4--Placing Bridge Concrete. The method and sequence of placing concrete shall conform to the provisions and requirements set forth for the particular type of construction.

907-804.03.6.4.1--Foundations and Substructures. Concrete seals shall be placed in accordance with Subsection 907-804.03.9. All other concrete for foundations shall be poured in the dry unless otherwise stipulated or authorization is given in writing by the Engineer to do otherwise. Concrete shall not be placed in foundations until the foundation area has been inspected and approved.

Unless otherwise specified, the placement of concrete in the substructure shall be in accordance with the general requirements of Subsection 907-804.03.6.

Unless otherwise directed, concrete in columns shall be placed in one continuous operation, and shall be allowed to set at least 12 hours before the caps are placed.

907-804.03.6.4.2--Superstructure. For simple spans, concrete shall preferably be deposited by beginning at the center of the span and working toward the ends. For continuous spans, concrete shall be deposited as shown on the plans. Concrete in girders shall be uniformly deposited for the full length of the girder and brought up evenly in horizontal layers. Concrete in areas below the bridge deck but being deposited at the same time as concrete for the bridge deck, like a diaphragm, shall be placed and consolidated sufficiently ahead of placing the concrete for the bridge deck such that the placing, consolidating, finishing, and curing of concrete for the bridge deck shall not be impeded or slowed.

Unless otherwise permitted by the Engineer, concrete shall not be placed in the superstructure until the column forms have been stripped sufficiently to determine the character of the concrete in the columns. Unless otherwise permitted by the Engineer, the load of the superstructure shall not be placed on pile bents until the caps have been in place at least seven (7) days and shall not be placed on other types of bents until the bents have been in place at least 14 days.

In placing concrete around steel shapes, it shall be placed on one side of the shape until it flushes up over the bottom flange of the shape on the opposite side, after which it shall be placed on both sides to completion.

Concrete in girder haunches less than three feet (3') in height shall be placed at the same time as that in the girder stem. Whenever a haunch or fillet has a height of three feet (3') or more at the abutment or columns, the haunch and the girder shall be poured in three successive stages: first, up to the lower side of the haunch; second, to the lower side of the girder; and third, to completion.

Except when intermediate construction joints are specified, concrete in slab, T-beam, or deck-girder spans shall be placed in one continuous operation for each span.

The floors and girders of through-girder superstructures shall be placed in one continuous operation unless otherwise specified, in which case special shear anchorage shall be provided to ensure monolithic action between girder and floor.

Concrete in box girders shall be placed as shown on the plans.

Concrete shall not be chuted directly into the forms of the span and shall be placed continuously with sufficient speed to be monolithic and to allow for finishing before initial set.

907-804.03.6.4.3--Bridge Deck. When using the Transverse Method in accordance with Subsection 907-804.03.19.7.3, the period of time between concrete placement and completion of the final curing shall be kept to a minimum, as directed by the Engineer.

907-804.03.7--Pneumatic Placing. Pneumatic placing of concrete will be permitted only if specified in the contract or if authorized by the Engineer. The equipment shall be so arranged that no vibrations result which might damage freshly placed concrete.

Where concrete is conveyed and placed by pneumatic means the equipment shall be suitable in kind and adequate in capacity for the work. The machine shall be located as close as practicable to the place of deposit. The position of the discharge end of the line shall not be more than 10 feet from the point of deposit. The discharge lines shall be horizontal or inclined upwards from the machine. At the conclusion of placement the entire equipment shall be thoroughly cleaned.

907-804.03.8--Pumping Concrete. Placement of concrete by pumping will be permitted only if specified in the contract or if authorized in writing by the Engineer. If used, the equipment shall be arranged so that no vibrations result which might damage freshly placed concrete.

Where concrete mixture is conveyed and placed by mechanically applied pressure (pumping), the equipment shall be suitable in kind and adequate in capacity for the work. The Contractor shall select concrete mixture proportions such that the concrete mixture is pumpable and placeable with the selected equipment.

The pumping equipment shall be thoroughly cleaned prior to concrete placement. Excess form release agent shall be removed from the concrete pump hopper. The Contractor shall prime the pump at no additional cost to the Department by pumping and discarding enough concrete mixture to produce a uniform mixture exiting the pump. At least 0.25 cubic yard of concrete mixture shall be pumped and discarded to prime the pump. Only concrete mixture shall be added directly into the concrete pump hopper after placement has commenced. If anything other than concrete mixture is added to the concrete pump hopper, all concrete mixture in the concrete pump hopper and pump line shall be discarded and the pump re-primed at no additional cost to the Department.

The discharge end of the pump shall be of such a configuration that the concrete does not move in the pump line under its own weight. The intent of this requirement is to ensure that entrained air in the concrete mixture remains entrained during pumping and depositing the concrete mixture. This shall be accomplished with one or both of the following:

- a minimum 10-foot flexible hose attached to the discharge end of a steel reducer having a minimum length of three (3) feet and a minimum reduction in area of 20% which is attached to the discharge end of the pump line, or
- a flexible reducing hose to the discharge end of the pumpline with a minimum reduction in area of 20% over a minimum 10-foot hose length.

Regardless of the configuration chosen, the Contractor shall ensure that the concrete is pumped and does not free-fall more than five (5) feet within the entire length of pump line and after discharge from the end of pump line.

The Contractor shall not have any type of metal elbow, metal pipe, or other metal fitting within five (5) feet of any person during discharge of concrete mixture.

Boom pumps shall have a current Concrete Pump Manufacturers Association's ASME/ANSI B30.27 certification. Equipment added to the boom and pump line shall meet the pump manufacturer's specifications and shall not exceed the manufacturer's maximum recommended weight limit for equipment added to the boom and pump line.

The operation of the pump shall be such that a continuous stream of concrete without air pockets is produced. When pumping is completed, the concrete remaining in the pipe line, if it is to be used, shall be ejected in such a manner that there will be no contamination of the concrete or separation of the ingredients. After this operation, the entire equipment shall be thoroughly cleaned.

The use of aluminum pipe as a conveyance for the concrete will not be permitted.

907-804.03.9--Depositing Concrete Under Water. Concrete shall not be deposited in water except with the approval of the Engineer.

Concrete deposited under water shall be Class S.

Concrete deposited under water shall be carefully placed in a compact mass in its final position by means of a tremie, a bottom dump bucket, or other approved method and shall not be disturbed after being deposited. Special care shall be exercised to maintain still water at the point of deposit. No concrete shall be placed in running water and all form work designed to retain concrete under water shall be water-tight. The consistency of the concrete shall be carefully regulated, and special care shall be exercised to prevent segregation of materials.

Concrete seals shall be placed continuously from start to finish, and the surface of the concrete shall be kept as nearly horizontal as practicable at all times. To ensure thorough bonding, each succeeding layer of a seal shall be placed before the preceding layer has taken initial set.

When a tremie is used, it shall consist of a tube having a diameter of at least 10 inches and constructed in sections having flanged couplings fitted with gaskets. The means of supporting the tremie shall be such as to permit the free movement of the discharge over the entire top surface of the work and to permit it to be lowered rapidly when necessary to choke off or retard the flow of concrete. The discharge end shall be closed at the start of the work so as to prevent water entering the tube and shall be entirely sealed. The tremie tube shall be kept full to the bottom of the hopper. When a batch is dumped into the hopper, the flow of concrete shall be induced by slightly raising the discharge end, always keeping it in the deposited concrete. The flow is then stopped by lowering the tremie. The flow shall be continuous until the work is completed.

Depositing of concrete by the drop bottom bucket method shall conform to the following: The top of the bucket shall be open. The bottom doors shall open freely downward and outward when tripped. The bucket shall be completely filled and slowly lowered to avoid backwash. It shall not be dumped until it rests on the surface upon which the concrete is to be deposited and when discharged shall be withdrawn slowly until well above the concrete.

Dewatering may proceed when the concrete seal is sufficiently hard and strong. As a general rule, this time will be 48 hours for concrete made with high-early-strength cement and three days for concrete made with other types of cement. All laitance and other unsatisfactory material shall be removed from the exposed surface by scraping, chipping, or other means which will not injure the surface of the concrete.

907-804.03.10--Construction Joints.

907-804.03.10.1--General. Unless otherwise approved by the Engineer, construction joints shall be made only where located on the plans or shown in the pouring schedule. If not detailed on the plans, or in the case of emergency, construction joints shall be placed as directed by the Engineer. Shear keys or inclined reinforcement shall be used where necessary to transmit shear or to bond the two sections together.

For continuous spans, bridge deck concrete shall be deposited as shown on the plans. Deviation from the pouring schedule shown in the plans is not permitted.

907-804.03.10.2--Bonding. Before depositing new concrete on or against concrete which has hardened, the forms shall be retightened. The surface of the hardened concrete shall be roughened as required by the Engineer and in a manner that will not leave loosened particles of aggregate or damaged concrete at the surface. It shall be thoroughly cleaned of foreign matter and laitance and saturated with water. When directed by the Engineer, the cleaned and saturated surfaces, including vertical and inclined surfaces, shall first be thoroughly covered with a coating of mortar or neat cement grout against which the new concrete shall be placed before the grout has attained its initial set.

The placing of concrete shall be carried continuously from joint to joint. The face edges of all joints which are exposed to view shall be carefully finished, true to line and elevation.

In order to bond successive courses suitable depressed or raised keys of the designated size shall be constructed. Raised keys shall be monolithic with the concrete of the lower course.

907-804.03.11--Concrete Exposed to Seawater. Unless otherwise specifically provided, concrete for structures exposed to seawater shall be Class AA concrete as referenced in Subsection 907-804.02.10. The clear distance from the face of the concrete to the nearest face of reinforcing steel shall be at least four inches. The mixing time and the water content shall be carefully controlled and regulated so as to produce concrete of maximum impermeability. The concrete shall be thoroughly compacted, and stone pockets shall be avoided. No construction joints shall be formed between the levels of extreme low water and extreme high water as determined by the Engineer. Between these levels, seawater shall not come in direct contact with the new concrete until at least 30 days have elapsed. The surface concrete as left by the forms shall be left undisturbed.

907-804.03.12--Blank.

907-804.03.13--Falsework. The Contractor shall submit to the Engineer four copies of structural design analysis and detail drawings, which show the method of falsework or centering. These designs and detail plans shall be prepared and bear the seal of a Registered Professional Engineer with experience in falsework design.

Falsework plans shall include falsework elevations together with all other dimensions and details which is considered necessary for the construction. Other pertinent data needed is size and spacing of all falsework members and minimum bearing requirements for false piles.

Upon completion of falsework erection, the Registered Professional Engineer shall certify that the erected falsework is capable of supporting the load for construction.

Falsework piling shall be spaced and driven so that the bearing value of each pile is sufficient to support the load that will be imposed upon it. The bearing value of the piles should be calculated according to the appropriate formula given in Section 803.

For designing falsework and centering, a weight of 150 pounds per cubic foot shall be assumed for green concrete. All falsework shall be designed and constructed to provide the necessary rigidity and to support the loads without appreciable settlement or deformation. The Contractor may be required to employ screw jacks or hardwood wedges to take up slight settlement in the falsework either before or during the placing of concrete. An allowance shall be made for anticipated compressibility of falsework and for the placement of shims, wedges, or jacks to produce the permanent structural camber shown on the plans. If during construction, any weakness develops and the falsework shows any undue settlement or distortion, the work shall be stopped, the part of the structure affected removed, and the falsework strengthened before work is resumed. Falsework which cannot be founded on a satisfactory footing shall be supported on piling, which shall be spaced, driven, and removed, as referenced in Subsection 907-804.03.15, in a manner approved by the Engineer.

All structures built across a public street or highway on which maintenance of traffic is required, shall have falsework so arranged that a vertical clearance of at least 12' 6" is provided. Unless otherwise specified, a horizontal clearance of at least the width of the traveled way shall be provided at all times. If the vertical clearance is less than 13' 6" or the horizontal clearance is less than the full crown width of the roadway, the Contractor shall install and maintain appropriate safety devices, clearance signs and warning lights, and shall notify the Engineer sufficiently in advance of restricting the clearance for the Engineer to advise both the Traffic Engineering and the Maintenance Divisions. All traffic control and safety devices shall be in accordance with the Manual on Uniform Traffic Control Devices (MUTCD).

907-804.03.14--Forms.

907-804.03.14.1--General. Forms shall be wood, metal, or other material approved by the Engineer. All forms shall be built mortar-tight and sufficiently rigid to prevent distortion due to pressure of the concrete and other loads incident to the construction operations. Forms shall be constructed and maintained so as to prevent warping and the opening of joints due to shrinkage. The forms shall be substantial and unyielding and shall be so designed that the finished concrete

will conform to the proper dimensions and contours. The design of the forms shall take into account the effect of vibration of concrete as it is placed.

Minimum requirements for slab overhang forms shall be 3/4-inch plywood supported on 2-inch x 6-inch S4S wood timbers placed flatwise on 16-inch centers.

Adjustable brackets for support of slab overhang forms shall be spaced at a maximum distance of 3' 0" center to center unless specifically approved otherwise. Grade points for forms shall coincide with the location of the adjustable form brackets.

Forms for surfaces exposed to view shall be of uniform thickness with a smooth inside surface of an approved type. Joints in forms for exposed surfaces shall be closely fitted to eliminate fins, stone pockets, or other variations in the surface of the concrete which would mar a smooth and uniform texture.

Forms shall be filleted at all sharp corners and shall be given a bevel or draft in the case of all projections, such as girders and copings, to ensure easy removal.

Metal ties or anchorages within the forms shall be so constructed as to permit their removal, without injury to the concrete, to a depth of at least the reinforcing steel clearance shown on the plans. In case ordinary wire ties are permitted, all wires, upon removal of the forms, shall be cut back at least 1/4 inch from the face of the concrete with chisels or nippers. Nippers shall be used for green concrete. All fittings for metal ties shall be designed so that upon their removal the cavities which are left will be the smallest practicable size. The cavities shall be filled with cement mortar and the surface left sound, smooth, even, and uniform in color.

Forms shall be set and maintained to the lines designated until the concrete is sufficiently cured for form removal. Forms shall remain in place for periods which shall be determined as hereinafter specified. If forms are deemed to be unsatisfactory in any way, either before or during the placing of concrete, the Engineer will order the work stopped until the defects have been corrected.

The shape, strength, rigidity, water-tightness, and surface smoothness of reused forms shall be maintained at all times. Warped or bulged lumber shall be resized before being reused. Forms which are unsatisfactory in any respect shall not be reused.

Access to the lower portions of forms for narrow walls and columns shall be provided for cleaning out extraneous material immediately before placing the concrete.

All forms shall be treated with an approved oil or saturated with water immediately before placing the concrete. For rail members or other members with exposed faces, the forms shall be treated only with an approved oil to prevent the adherence of concrete. Any material which will adhere to or discolor the concrete shall not be used.

When metal forms are used they shall be kept free from rust, grease, or other foreign matter which will discolor the concrete. They shall be of sufficient thickness and so connected that they will remain true to shape and line, and shall conform in all respects as herein prescribed for mortar

tightness, filleted corners, beveled projections, etc. They shall be constructed so as to ensure easy removal without injury to concrete. All inside bolt and rivet heads shall be countersunk.

All chamfer strips shall be dressed, straight, and of uniform width and shall be maintained as such at all times.

907-804.03.14.2--Stay-In-Place Metal Forms. Stay-in-place (SIP) metal forms are corrugated metal sheets permanently installed between the supporting superstructure members. After the concrete has cured, these forms shall remain in place as permanent, non-structural members of the bridge.

Pay quantities for deck concrete will be computed from the dimensions shown in the Contract Plans with no allowance for changes in deflection and /or changes in dimensions necessary to accommodate the SIP metal forms.

There will be no direct payment for the cost of the forms and form supports, or any material, tools, equipment, or labor incidental thereto, but the cost shall be considered absorbed in the contract unit price for concrete.

Before fabricating any material, three (3) complete sets of SIP metal form shop drawings and design calculations, bearing the Design Engineer's Seal, shall be submitted to the Director of Structures, State Bridge Engineer, through the Engineer, for review. The Contractor's SIP metal form Design Engineer shall be a MS Registered Professional Engineer who is knowledgeable in the field of structural design.

In no case shall additional dead load produced by the use of SIP metal forms overstress any bridge component. Design calculations shall indicate any additional dead load from SIP metal form self-weight, form support hangers, concrete in flutes, concrete due to form deflection, etc. not included in the Contract Plans. The additional dead loads shall be clearly labeled and tabulated on the shop drawings. Bridge Division will evaluate the additional load for overstress of the bridge components. In the event that the additional dead load produces an overstress in any bridge component, Bridge Division will reject the Contractor's design. Deflection and loads produced by deflection of the SIP metal forms shall be considered and indicated in the design calculations.

The cambers and deflections provided in the Contract Plans do not consider the effects of SIP metal forms. The Contractor's Engineer shall take into account the weight of the forms and any additional dead load when developing the "Bridge Superstructure Construction Plan".

For the purpose of reducing any additional dead load produced by the SIP metal forms, the flutes of SIP metal forms may be filled with polystyrene foam. When polystyrene foam is used to fill the forms, the form flutes shall be filled completely; no portion of the polystyrene foam shall extend beyond the limits of the flutes. The Contractor shall ensure that the polystyrene foam remains in its required position within flutes during the entire concrete placement process. The Contractor shall not use reinforcing steel supports or other accessories in such a manner as to cause damage to the polystyrene foam. All damaged polystyrene foam shall be replaced to the

satisfaction of the Engineer. All welding of formwork shall be completed prior to placement of polystyrene foam.

For bridges not located in horizontal curves, the Contractor may reduce the additional dead load by matching the flute spacing with the transverse steel spacing of the bottom layer. The bottom longitudinal layer of steel shall have one (1) inch of minimum concrete cover measured from the bottom of the reinforcing to the top of the flute. The Contractor will not be allowed to vary the reinforcing steel spacing or size from the Contract Plans for the purpose of matching flute spacing.

907-804.03.14.2.1--Materials. SIP metal forms and supports shall meet the requirements of ASTM Designation: A653 having a coating designation G165. Form materials that are less than 0.03-inch uncoated thickness shall not be allowed.

907-804.03.14.2.2--Certification. The Contractor shall provide written certification from the manufacturer stating the product meets the requirements of this specification to the Engineer along with the delivery of the coated forms to the job site.

907-804.03.14.2.3--Polystyrene Foam. The polystyrene foam shall be comprised of expanded polystyrene manufactured from virgin resin of sufficient density to support the weight of concrete without deformation. The polystyrene foam shall be extruded to match the geometry of the flutes and provide a snug fit. The polystyrene foam shall have a density of not less than 0.8 pounds per cubic foot. The polystyrene foam shall have water absorption of less than 2.6% when tested according to ASTM Designation: C272. The Contractor shall provide written certification from the manufacturer stating the polystyrene foam product meets the requirements of this specification to the Engineer along with the delivery of the coated forms to the job site.

907-804.03.14.2.4--Design. The design of the SIP metal forms shall meet the following criteria.

1. The maximum self-weight of the stay in place metal forms, plus the weight of the concrete or expanded polystyrene required to fill the form flutes (where used), shall not exceed 20 psf.

2. The forms shall be designed on the basis of dead load of form, reinforcement, and plastic concrete plus 50 pounds per square foot for construction loads. The design shall use a unit working stress in the steel sheet of not more than 0.725 of the specified minimum yield strength of the material furnished, but not to exceed 36,000 psi.

3. Deflection under the weight of the forms, reinforcement, and plastic concrete shall not exceed 1/180 of the form span or 1/2 inch, whichever is less, for form spans of 10 feet or less, or 1/240 of the form span or 3/4 inch, whichever is less, for form spans greater than 10 feet.

4. The design span of the form shall equal the clear span of the form plus two (2) inches. The span shall be measure parallel to the form flutes.

5. Physical design properties shall be computed in accordance with requirements of the AISI Specifications for the Design of Cold Formed Steel Structural Members, latest published edition.

6. The design concrete cover required by the plans shall be maintained for all reinforcement.

7. The plan dimensions of both layers of primary deck reinforcement from the top surface of the concrete deck shall be maintained.

8. The SIP metal form shall not be considered as lateral bracing for compression flanges of supporting structural members.

9. SIP metal forms shall not be used under closure pours or in bays where longitudinal slab construction joints are located. SIP metal forms shall not be used under cantilevered slabs such as the overhang outside of fascia members.

10. Forms shall be secured to the supporting members by means other than welding directly to the member. Welding to the top flanges of steel stringers and/or girders shall not be allowed. Alternate installation procedures shall be submitted addressing this condition.

907-804.03.14.2.5--Construction. SIP metal form sheets shall not rest directly on the top of the stringer of floor beam flanges. Sheets shall be fastened securely to form supports, and maintain a minimum bearing length of one (1) inch at each end for metal forms. Form supports shall be placed in direct contact with the flange of the stringer or floor beam. All attachments for coated metal forms shall be made by bolts, clips, screws, or other approved means.

907-804.03.14.2.6--Form Galvanizing Repairs. Where forms or their installation are unsatisfactory in the opinion of the Engineer, either before or during placement of the concrete, the Contractor shall correct the defects before proceeding with the construction work. The cost of such corrective work shall be at the sole expense of the Contractor. Minor heat discoloration in areas of welds shall not be touched up.

907-804.03.14.2.7--Concrete. The Contractor shall ensure concrete placement does not damage the SIP metal forms. Approved pouring sequences shall be used. The completed SIP metal form system shall be sufficiently tight to prevent leakage of mortar or concrete. The concrete shall be consolidated to avoid honeycomb and voids, especially at construction joints, expansion joints, valleys, and ends of form sheets. Calcium chloride or any other admixture containing chloride salts shall not be used in the concrete.

907-804.03.14.2.8--Inspection. The Engineer will observe the Contractor's method of construction during all phases of the construction of the bridge deck slab, including the installation of the SIP metal form system; location and fastening of the reinforcement; composition of concrete items; mixing procedures, concrete placement, and vibration; and finishing of the bridge deck. Should the Engineer determine that the procedures used during the placement of the concrete warrant inspection of the underside of the deck, at least one section of the metal forms shall be removed in each span for this purpose. This shall be done as soon after placing the concrete as

practical in order to provide visual evidence that the concrete mix and the procedures are obtaining the desired results. An additional section shall be removed in any span if the Engineer determines that there has been any change in the concrete mix or in the procedures warranting additional inspection.

If, in the Engineer's judgment, inspection is needed to check for defects in the bottom of the deck or to verify soundness, the SIP metal forms shall be sounded with a hammer after the deck concrete has been in place a minimum of two days. If sounding discloses areas of doubtful soundness to the Engineer, the SIP metal forms shall be removed from such areas for visual inspection after the concrete has attained adequate strength. The SIP metal bridge deck forms shall be removed at no expense to the State.

At locations where sections of the metal forms have been removed, the Engineer will not require the Contractor to replace the metal forms. The adjacent metal forms and supports shall be repaired to present a neat appearance and to ensure their satisfactory retention. As soon as the form is removed, the Engineer will examine the concrete surfaces for cavities, honeycombing, and other defects. If irregularities are found and the Engineer determines that these irregularities do not justify rejection of the work, the concrete shall be repaired as directed by the Engineer. If the Engineer determines that the concrete where the form is removed is unsatisfactory, additional metal forms as necessary shall be removed to inspect and repair the slab, and the Contractor's method of construction shall be modified as required to obtain satisfactory concrete in the slab. All unsatisfactory concrete shall be removed and replaced as directed at no expense to the State.

If the method of construction and the results of the inspections as outlined above indicate that sound concrete has been obtained throughout the slabs, the amount of sounding and form removal may be reduced when approved by the Engineer.

The Contractor shall provide a safe and convenient means of conducting of the inspection.

907-804.03.15--Removal of Falsework, Forms, and Housing. In the determination of the time for the removal of falsework, forms, and housing and the discontinuance of heating, consideration shall be given to the location and character of the structure, the weather and other conditions influencing the setting of the concrete, and the materials used in the mix. No forms or supports shall be removed prior to approval by the Engineer. During cold weather, removal of housing and the discontinuance of heating shall be in accordance with Subsection 907-804.03.16.1.

Concrete in the last pour of a continuous superstructure shall have attained a compressive strength of 2,400 psi, as determined by cylinder tests or maturity meter probe, prior to striking any falsework. It is important that falsework be removed as evenly as possible to prevent excessive deflection stresses in the spans.

At the Contractor's option and with the approval of the Engineer, the time for removal of forms may be determined by cylinder tests, in accordance with the requirements listed in Table 6, in which case the Contractor shall furnish facilities for testing the cylinders. The facilities shall include an approved concrete testing machine of sufficient capacity and calibrated by an acceptable commercial laboratory. Tests shall be conducted in the presence of a Department representative

to witness and record strengths obtained on each break or performed by a Department certified technician in an approved testing laboratory.

[a1]The cylinders shall be cured under conditions which are not more favorable than those existing for the portions of the structure which they represent.

Table 6
Minimum Compressive Strength Requirements for Form Removal

Forms:

Columns	1000 psi
Side of Beams	1000 psi
Walls not under pressure	1000 psi
Floor Slabs, overhead	2000 psi
Floor Slabs, between beams	2000 psi
Slab Spans	2400 psi
Other Parts	1000 psi

Centering:

Under Beams	2400 psi
Under Bent Caps	2000 psi

Limitation for Placing Beams on:

Pile Bents, pile under beam	2000 psi
Frame Bents, two or more columns	2200 psi
Frame Bents, single column	2400 psi

For bridges, non-SIP metal forms for bridge deck slabs overhead and bridge deck slabs between beams shall be removed with the approval of the Engineer, between two weeks and four weeks after the removal of the wet burlap applied in accordance with Subsection 907-804.03.17.1, or application of liquid membrane applied in accordance with Subsection 907-804.03.17.2.

In lieu of using concrete strength cylinders to determine when falsework, forms, and housings can be removed, an approved maturity meter may be used to determine concrete strengths by inserting probes into concrete placed in a structure. The minimum number of maturity meter probes required for each structural component shall be in accordance with Table 7. Falsework, forms, and housings may be removed when maturity meter readings indicate that the required concrete strength is achieved. Procedures for using the maturity meter and developing the strength/maturity relationship shall follow the requirements of AASHTO Designation: T 325 and ASTM Designation: C 1074 specifications. Technicians using the maturity meter or calculating strength/maturity graphs shall be required to have at least two hours of training prior to using the maturity equipment.

Table 7
Requirements for use of Maturity Meter Probes

Structure Component	Quantity of Concrete	No. of Probes
Slabs, beams, walls, & miscellaneous items	0 - 30 yd^3	2
	> 30 to 60 yd^3	3
	> 60 to 90 yd^3	4
	> 90 yd^3	5
Footings, Columns & Caps	0 - 13 yd^3	2
	> 13 yd^3	3
Pavement, Pavement Overlays	1200 yd^2	2
Pavement Repairs	Per repair or 900 yd^2 Whichever is smaller	2

Methods of form removal likely to cause overstressing of the concrete shall not be used. Forms and supports shall be removed in a manner that will permit the concrete to uniformly and gradually take the stresses due to its own weight. Centers shall be gradually and uniformly lowered in a manner that will avoid injurious stresses in any part of the structure.

As soon as concrete for railings, ornamental work, parapets and vertical faces which require a rubbed finish has attained a safe strength, the forms shall be carefully removed without marring the surfaces and corners, the required finishing performed, and the required curing continued.

Prior to final inspection of the work, the Contractor shall remove all falsework, forms, excavated material or other material placed in the stream channel during construction. Falsework piles may be cut or broken off at least one foot below the mudline or ground line unless the plans specifically indicate that they are to be pulled and completely removed from the channel.

907-804.03.16--Cold or Hot Weather Concreting.

907-804.03.16.1--Cold Weather Concreting. In cold weather, the temperature of the concrete when delivered to the job site shall conform to the temperature limitations of "Temperature Limitations on Concrete when Delivered to Job Site" listed in Table 8 below. Cold weather is defined as three consecutive days when there is a probability that the daily average of the highest and lowest ambient temperatures is expected to be less than 40°F. This three-day forecast shall be based on the latest information available from the National Weather Service.

When the Contractor proposes to place concrete during seasons when there is a probability of ambient temperatures lower than 40°F, the Contractor shall have available on the project the approved facilities necessary to enclose uncured concrete and to keep the temperature of the air inside the enclosure within the ranges and for the minimum periods specified herein.

When there are indications of temperatures of less than 40°F during the first four days after placement of the concrete, the concrete shall be protected from cold temperatures by maintaining a temperature between 50°F and 100°F for at least four days after placement and between 40°F and 100°F for at least three additional days. The Contractor shall use such heating equipment such as stoves, salamanders, or steam equipment as deemed necessary to protect the concrete. When dry heat is used, means of maintaining atmospheric moisture shall be provided.

At the option of the Contractor with the approval of the Engineer, when concrete is placed during cold weather and there is a probability of ambient temperatures lower that 40°F, an approved maturity meter may be used to determine concrete strengths by inserting probes into concrete placed in a structure. The minimum number of maturity meter probes required for each structural component shall be in accordance with Table 7. An approved insulating blanketing material shall be used to protect the work when ambient temperatures are less than 40°F and shall remain in place until the required concrete strength in Table 6 is achieved. Procedures for using the maturity meter and developing the strength/maturity relationship shall follow the requirements of AASHTO Designation: T 325 and ASTM Designation: C 1074 specifications. Technicians using the maturity meter or calculating strength/maturity graphs shall be required to have at least two hours of training prior to using the maturity equipment.

One or more of the aggregates and/or mixing water may be heated. The aggregates may be heated by steam, dry heat, or by placing in the mixing water which has been heated. Frozen aggregates shall not be used. When either aggregates or water are heated above 100°F, the aggregates and water shall be combined first in the mixer before the cement is added to avoid flash set. Cement shall not be mixed with water or with a mixture of water and aggregate having a temperature greater than 100°F.

The use of salt or other chemical admixtures in lieu of heating will not be permitted.

Before placing concrete, all ice or frost shall be removed from the forms and reinforcement.

In the case of concrete placed directly on or in the ground, such as for footings or bottom slabs, protection and curing during cold weather may be provided as set for concrete pavement under Subsection 501.03.20.3.

The Contractor shall assume all risk and added cost connected with the placing and protecting of concrete during cold weather. Permission given by the Engineer to place concrete during such time will in no way relieve the Contractor of responsibility for satisfactory results. Should it be determined at any time that the concrete placed under such conditions is unsatisfactory, it shall be removed and replaced with satisfactory concrete by the Contractor without extra compensation.

TABLE 8
COLD WEATHER TEMPERATURE LIMITATIONS ON CONCRETE WHEN DELIVERED TO JOB SITE

Section thickness in the least dimension inches	Jobsite Acceptance Temperature Range °F
Less than 12	55 to 75
12 to 36	50 to 70
36 to 72	45 to 65
Greater than 72	40 to 60

907-804.03.16.2--Hot Weather Concreting. The manufacture, placement, and protection of concrete during hot weather requires special attention to ensure that uniform slump ranges and satisfactory placement qualities are maintained, that surface cracking is held to a minimum, and that design strengths are produced.

When the ambient temperature is above 90°F, the forms, reinforcing steel, steel beam flanges, and other surfaces which will come in contact with the concrete shall be cooled to below 90°F by means of a water spray or other approved methods.

When the atmospheric temperature is predicted to be 90°F or above based on the latest information available from the National Weather Service any time during the day of placement or day after placement, the time of placement shall not begin until 5:00 p.m. on the day of placement and shall be completed by 6:00 a.m. the following day.

907-804.03.17--Curing Concrete. Curing is defined as all actions taken to ensure the moisture and temperature conditions of freshly placed concrete exist so the concrete may develop its potential properties. Curing shall take place from the time of placement until its potential properties have developed. The Contractor shall use the guidance in ACI 308R-01 to:

a) cure the concrete in such a manner as to prevent premature moisture loss from the concrete,
b) supply additional moisture to the concrete as required in order to ensure sufficient moisture within the concrete, and
c) maintain a concrete temperature beneficial to the concrete.

Curing in accordance with the requirements in either Subsection 907-804.03.17.1 or Subsection 907-804.03.17.2 shall be completely established within 20 minutes after finishing, except as noted for bridge decks. Finishing is complete when the pan drag, burlap drag, or other finishing method is complete.

When stay-in-place (SIP) metal forms are used in accordance with Subsection 907-804.03.14.2 in conjunction with the Transverse Method in accordance with Subsection 804.03.19.7.3, if the concrete mixture contains lightweight aggregate (LWA) meeting the requirements of Subsection 907-703.19.2 and an internal curing water content of 8.0 pounds or greater per 100 pounds of total cementitious materials, curing shall be accomplished in accordance with either Subsection 907-804.03.17.1 or Subsection 907-804.03.17.2. The minimum amount of LWA shall be established following the information in the Department's *Concrete Field Manual*, Paragraph 5.5.5. If the concrete mixture does not meet or exceed this internal curing water content, curing shall be accomplished in accordance with Subsection 907-804.03.17.1.

When SIP metal forms are not used or used in conjunction with the Longitudinal Method in accordance with Subsection 804.03.19.7.2, curing shall be accomplished in accordance with either Subsection 907-804.03.17.1 or Subsection 907-804.03.17.2.

The length of time for curing shall be maintained in accordance with either of the following:

1. Prescribed Length of Time:

a) Curing following the requirements of Subsection 907-804.03.17.1 shall continue uninterrupted for at least 14 days.
b) Curing following the requirements of Subsection 907-804.03.17.2 shall continue uninterrupted for at least 10 days.

OR

2. Length of Time Defined by Development of Compressive Strength:
Curing following the application requirements of Subsection 907-804.03.17.1 or Subsection 907-804.03.17.2 shall continue uninterrupted for each day's production until the compressive strength of the concrete exceeds 75% of the 28-day compressive strength submitted as the Basis of Proportioning per Subsection 907-804.02.10.1. Therefore, if an area is being cured in accordance with Subsection 907-804.03.17.1, the curing by wet burlap shall continue until the concrete in that area has attained a minimum of 75% of the 28-day compressive strength submitted as the Basis of Proportioning per Subsection 907-804.02.10.1. Likewise, if an area is being cured in accordance with Subsection 907-804.03.17.2, the curing by liquid membrane shall continue until the concrete in that area has attained a minimum of 75% of the 28-day compressive strength submitted as the Basis of Proportioning per Subsection 907-804.02.10.1.

The compressive strength of the concrete may be determined by the use of maturity meter in accordance with Subsection 907-804.03.15.

907-804.03.17.1--Water With Waterproof Cover. All burlap shall be completely saturated and wet prior to placing it on the concrete. The burlap shall have been fully soaked in water for a minimum of 12 hours prior to placement on the concrete.

For bridge decks, the Contractor shall apply one (1) layer of saturated burlap within 20 minutes of the initial strike-off for bridges without a skew and 25 minutes of the initial strike-off for bridges with a skew. For all other concrete, the Contractor shall apply one (1) layer of saturated burlap within 20 minutes of completing finishing.

For bridge decks, following the first layer of burlap, the Contractor shall apply a second layer of saturated burlap within five (5) minutes of applying the first layer.

The applied burlap shall completely cover all exposed concrete surfaces. In areas where the burlap may not be directly applied due to the concrete surface, for example, in areas where reinforcing steel protrudes thru the concrete surface, like in the areas of a bridge deck where the bridge railing will be constructed at a later time, the saturated burlap shall be draped over the steel. The concrete surface shall not be allowed to dry after strike-off or at any time during the curing period.

The Contractor shall maintain the burlap in a fully wet condition using powered fogging equipment capable of producing a fog spray of atomized droplets of water until the concrete has gained sufficient strength to allow foot traffic without the foot traffic marring the surface of the concrete. Burlap shall not be maintained in the fully wet condition using equipment which does not produce a fog spray of atomized droplets of water or by use of manually pressurized sprayers.

For bridge decks, once the concrete has gained sufficient strength to allow foot traffic which does not mar the surface of the concrete, soaker hoses shall be placed on the burlap. The soaker hoses shall then be supplied with running water continuously to maintain continuous saturation of all burlap and the entire concrete surface.

If there is a delay in the placement of the first layer of saturated burlap outside the time limit, the struck-off and finished concrete shall be kept wet by use of the powered fogging equipment used to keep the burlap wet.

White polyethylene sheets shall be placed on top of the wet burlap and, as applicable, soaker hoses, covering the entire concrete surface as soon as practical and not more than 12 hours after the placement of the concrete. White polyethylene sheets of the widest practical width shall be used, overlapping adjacent sheets a minimum of six inches (6") and tightly sealed with an adhesive like pressure sensitive tape, mastic, glue, or other approved methods to form a complete waterproof cover of the entire concrete surface. White polyethylene sheets which overlap a minimum of two feet (2') may be held in place using means other than an adhesive. The white polyethylene sheets shall be secured so that wind will not displace them. The Contractor shall immediately repair the broken or damaged portions or replace sections that have lost their waterproof qualities.

If burlap and/or white polyethylene sheets are temporarily removed for any reason during the curing period, the Contractor shall keep the entire exposed area continuously wet. The saturated burlap and white polyethylene sheets shall be replaced, resuming the specified curing conditions, as soon as possible.

The Contractor shall inspect the bridge deck surface once every eight (8) hours for the entirety of the curing period, so that all areas remain wet for the entire curing period and all curing requirements are satisfied and document the inspection in accordance with Subsection 907-804.03.17.1.1.

At the end of the curing period, one coating of liquid membrane shall be applied following the requirements of Subsection 907-804.03.17.1.2. The purpose of the coating of liquid membrane is to allow for slow drying of the concrete. The application of liquid membrane to any area shall be complete within 30 minutes of the beginning of removal of the white polyethylene sheets, soaker hoses, and burlap from this area.

907-804.03.17.1.1--Documentation for Bridge Decks. The Contractor shall provide the Engineer with a daily inspection report that includes:

- documentation that identifies any deficiencies found (including location of deficiency);
- documentation of corrective measures taken;
- a statement of certification that all areas are wet and all curing material is in place on the entire bridge deck;
- documentation showing the time and date of all inspections and the inspector's signature;
- documentation of any temporary removal of curing materials including location, date and time, length of time curing was removed, and means taken to ensure exposed area was kept continuously wet.

907-804.03.17.1.2--Liquid Membrane. At the end of the 14-day wet curing period the wet burlap and polyethylene sheets shall be removed and within 30 minutes, the Contractor shall apply white liquid membrane to the deck. The liquid membrane shall be thoroughly mixed within the time recommended by the liquid membrane producer but no more than an hour before use. If the use of liquid membrane results in a streaked or blotched appearance, the method shall be stopped and water curing applied until the cause of defective appearance is corrected.

The liquid membrane shall be applied when no free water remains on the surface but while the surface is still wet. The liquid membrane shall be applied according to the manufacturer's instructions with a minimum spreading rate per coat of one (1) gallon per 200 square feet of concrete surface. If the concrete is dry or becomes dry, the Contractor shall thoroughly wet it with water applied as a fog spray by means of approved equipment.

The application of liquid membrane shall be accomplished by the use of power applied spray equipment using nozzles and other equipment recommended by the liquid membrane producer. Manually pressurized or manual pump-up type sprayers shall not be used to apply the first application of liquid membrane.

As a visual guide, the color of concrete covered with the required amount of liquid membrane should be indistinguishable from a sheet of commercially available standard "letter" size white copier paper placed on top of it when viewed from a distance of about five feet (5') away horizontally if standing on the same grade as the concrete. The appearance of the concrete does not supersede applying the minimum spreading rate.

The coating shall be protected against marring for at least seven (7) days after the application of the curing compound. The coating on bridge decks shall receive extra attention and may require additional protection as required by the Engineer. All membrane marred or otherwise disturbed shall be given an additional coating. Manually pressurized or manual pump-up type sprayers may be used for giving marred areas the required additional application of liquid membrane. Should the surface coating be subjected repeatedly to injury, the Engineer may require that the water curing method be applied at once.

The 7-day period during which the liquid membrane is applied and protected shall not be reduced even if the period of wet curing is extended past the required 14 days.

907-804.03.17.1.2.1--Liquid Membrane Documentation. The Contractor shall make available to the Engineer an application rate verification method and any information necessary during application of the liquid membrane to verify that the rate of application meets the prescribed rate for the various surfaces of the concrete, including, but not limited to, the top surface of the bridge deck and exposed sides of the bridge deck after any forms are removed. The Contractor shall submit this application verification method to the Engineer in accordance with Subsection 907-804.02.12.1.1.

One method of verifying the rate of application is as follows:

1. Determine the volume of liquid membrane in the container. For a container with a uniform cross-sectional area, for example a 55-gallon drum, determine the area of the cross-section. Determine the height of the surface of the liquid membrane from the bottom of the container. This may be accomplished by inserting a sufficiently long, clean dip-stick parallel with the axis of the container into the liquid membrane until the inserted end of the dip-stick contacts the bottom of the container. On removing the dip-stick, measure the length from the end which was inserted to the point on the dip-stick where the liquid membrane ceases to coat the dip-stick. Multiply the area of the cross-section by the height of the level of liquid membrane, maintaining consistent units, to determine the volume.
2. Perform step 1 prior to beginning applying the liquid membrane to establish the initial volume.
3. During the period of application, perform step 1 each 100 square feet of bridge deck.
4. In order to meet the required application rate of one (1) gallon per 200 square feet, the amount in the container shall be at least 0.5 gallon less than the previous volume in the previous 100 square feet. Other changes in volume may apply depending on the manufacturer's recommended application rate.
5. Additional applications to an area shall be applied until the required rate is satisfied. Areas which are not visually satisfactory to the Engineer shall have additional liquid membrane applied as directed by the Engineer.

The amount of liquid membrane applied shall be determined each day using the application verification method. This information shall be submitted to the Engineer within 24 hours of applying the liquid membrane.

907-804.03.17.2--Liquid Membrane Method. All surfaces on which curing is to be by liquid membrane shall be given the required surface finish prior to the application of liquid membrane. Concrete surfaces cured by liquid membrane shall receive two applications of white liquid membrane. Neither application shall be made from a position supported by or in contact with the freshly placed concrete. Both applications shall be applied perpendicularly to the surface of the concrete.

When using liquid membrane, the liquid membrane shall be thoroughly mixed within the time recommended by the liquid membrane producer but no more than an hour before use. If the use of liquid membrane results in a streaked or blotched appearance, the method shall be stopped and water curing applied until the cause of defective appearance is corrected.

The application of liquid membrane shall accomplished by the use of power applied spray equipment using nozzles and other equipment recommended by the liquid membrane producer. Manually pressurized or manual pump-up type sprayers shall not be used to apply the first two applications of liquid membrane.

The liquid membrane shall be applied when no free water remains on the surface but while the surface is still wet. The liquid membrane shall be applied according to the manufacturer's instructions with a minimum spreading rate per coat of one (1) gallon per 200 square feet of concrete surface. If the concrete is dry or becomes dry, the Contractor shall thoroughly wet it with water applied as a fog spray by means of approved equipment.

The first application of the liquid membrane shall be made as the work progresses. For bridge decks, the first application shall be completed in each area of the deck, including the area in which the bridge railing will be later constructed, within 20 minutes of initial strike-off for bridges with no skew and within 25 minutes of initial strike-off for bridges with skew. For all other concrete, the first application of the liquid membrane shall be completed within 20 minutes of finishing.

The second application shall be applied within 30 minutes after the first application. The liquid membrane shall be uniformly applied to all exposed concrete surfaces.

As a visual guide, the color of concrete covered with the required amount of liquid membrane should be indistinguishable from a sheet of commercially available standard "letter" size white copier paper placed on top of it when viewed from a distance of about five feet (5') away horizontally if standing on the same grade as the concrete. The appearance of the concrete does not supersede applying the minimum spreading rate.

The Contractor shall make available to the Engineer an application rate verification in accordance with Subsection 907-804.03.17.1.2.1.

The coating shall be protected against marring for at least 10 days after the application of the curing compound. The coating on bridge decks shall receive extra attention and may require additional protection as required by the Engineer. All membrane marred or otherwise disturbed shall be given an additional coating. Manually pressurized or manual pump-up type sprayers may be used for giving marred areas the required additional application of liquid membrane. Should the surface coating be subjected repeatedly to injury, the Engineer may require that the water curing method be applied at once.

After the specified time for curing, but prior to constructing the bridge railing, all liquid membrane shall be removed from both the exposed surfaces of the reinforcing steel and the concrete surfaces on which bridge rail will be constructed. This removal of liquid membrane may be accomplish by high pressure washing or other methods approved by the Engineer.

907-804.03.18--Expansion and Fixed Joints, Bearings, Anchor Bolts, Plates, Castings, Pipes, Drains, Conduits, Etc. All joints shall be constructed according to details shown on the plans. The edges of the concrete at open or filled joints shall be chamfered or edged as indicated on the plans.

907-804.03.18.1--Open Joints. Open joints shall be placed in the locations shown on the plans and shall be constructed by the insertion and subsequent removal of a wood strip, metal plate, or other approved material. The insertion and removal of the template shall be accomplished without chipping or breaking the corners of the concrete. Reinforcement shall not extend across an open joint unless so specified on the plans.

907-804.03.18.2--Filled Joints. Poured expansion joints and joints to be sealed with premolded materials shall be constructed similar to open joints. When premolded types are specified, the filler shall be placed in correct position as the concrete on one side of the joint is placed. When

the form is removed, the concrete on the other side shall be placed. Adequate water stops of metal, rubber, or plastic shall be carefully placed as shown on the plans.

907-804.03.18.3--Premolded and Preformed Joint Seals. When preformed elastomeric compressive joint seals are specified, the previously formed and cured open joint shall be thoroughly cleaned of all foreign matter, the required adhesive uniformly applied, and the seal installed in accordance with the recommendations of the manufacturer of the seal.

When premolded filler is used for the joints in the roadway slab, the tops shall be adequately sealed with poured joint filler in accordance with details on the plans. Premolded filler shall be permanently fastened to an adjacent concrete surface by appropriate use of copper wire, copper nails, or galvanized nails.

907-804.03.18.4--Steel Joints. The plates, angles, or other structural shapes shall be accurately shaped at the shop to conform to the section of the concrete floor. Fabrication and painting shall conform to the specifications covering those items. When called for on the plans or in the special provisions, the material shall be galvanized in lieu of painting. Care shall be taken to ensure that the surface in the finished plane is true and free of warping. Positive methods shall be employed in placing the joints to keep them in correct position during the placing of the concrete. The opening at expansion joints shall be that designated on the plans at normal temperature, and care shall be taken to avoid impairment of the clearance in any manner.

907-804.03.18.5--Water Stops. Adequate water stops of metal, rubber, or plastic shall be placed as shown on the plans. Where movement at the joint is provided for, the water stops shall be of a type permitting movement without injury. They shall be spliced, welded, or soldered to form continuous watertight joints.

907-804.03.18.6--Bearing Devices. Bearing plates, rockers, and other bearing devices shall be constructed according to details shown on the plans. Unless otherwise specified or set in plastic concrete, they shall be set in grout to insure uniform bearing. Structural steel and painting shall conform to the requirements of Sections 810 and 814. When specified, the material shall be galvanized in lieu of painting. The rockers or other expansion bearing devices shall be set, considering the temperature at the time of erection, so that the required position of the device is provided.

At all points of bearing contact, concrete members shall be separated from underlying members by dimensioned bearing pads or by methods and/or materials specified on the plans.

When not otherwise specifically provided, contact areas between concrete super-structures and substructures shall be separated by three layers of No. 15, Type I, roofing felt.

907-804.03.18.7--Friction Joints. Metal friction joints shall consist of plates as indicated on the plans and shall be securely anchored in correct position. All sliding surfaces shall be thoroughly coated with an approved graphite grease. Movement shall not be impeded by the concrete in which the plates are embedded.

907-804.03.18.8--Placing Anchor Bolts, Plates, Castings, Grillage, Conduits, Etc. All anchor bolts, plates, castings, grillage, conduits, etc. indicated on the plans to be placed in or on the concrete shall be placed, set, or embedded as indicated or as directed. These items of the construction shall be set in portland cement mortar as referenced in Subsection 714.11.5, except that anchor bolts may, as permitted by the Engineer, be built into the masonry, set in drilled holes, or placed as the concrete is being constructed by inserting encasing pipe or oiled wooden forms of sufficient size to allow for adjustment of the bolts. After removal of the pipe or forms, the space around the bolts shall be filled with portland cement mortar completely filling the holes. The bolt shall be set accurately and perpendicular to the plane of the seat.

Anchor bolts which are to be set in the masonry prior to the erection of the superstructure shall be carefully set to proper location and elevation with a template or by other suitable means.

When bed plates are set in mortar, no superstructure or other load shall be placed thereon until this mortar has been allowed to set for a period of at least 96 hours, subject to the restrictions for cold weather concreting in Subsection 907-804.03.16.1. The mortar shall be kept well moistened during this period.

Weep hole drains shall be installed in abutments and retaining walls, and roadway drains or scuppers shall be installed in the roadway slabs in accordance with the details shown on the plans.

Where backfill is to be made at weep holes or openings in the structure, sand or stone chimneys or French drains shall be constructed as specified and shall extend through the portion of the backfill to be drained. Except as otherwise provided, the sand, stone, or slag used in this construction shall meet the requirements of Subsection 704.04.

907-804.03.19--Finishing Concrete Surfaces.

804.03.19.1--Classes of Finishes. Surface finishes of exposed concrete surfaces shall be classified as follows:

Class 1 - Ordinary Surface Finish
Class 2 - Rubbed or spray Finish
Class 3 - Tooled Finish
Class 4 - Sand-Blast Finish
Class 5 - Wirebrush or Scrubbed Finish
Class 6 - Floated Surface Finish

907-804.03.19.2--Class 1, Ordinary Surface Finish. Immediately following the removal of forms, all fins and irregular projections shall be removed from all surfaces except from those which are not to be exposed or not to be waterproofed. On all surfaces, the cavities produced by form ties and all other holes, honeycomb spots, broken corners or edges, and other defects shall be thoroughly cleaned, and after having been kept saturated with water for at least three hours shall be carefully pointed and trued with a mortar of cement and fine aggregate mixed in the proportions used in the class of the concrete being finished. Mortar used in pointing shall be not more than one hour old. The mortar patches shall be cured as specified under Subsection 907-804.03.17. All

construction and expansion joints shall be left carefully tooled and free of mortar and concrete. The joint filler shall be left exposed for its full length with clean and true edges.

The resulting surfaces shall be true and uniform. All surfaces which cannot be repaired to the satisfaction of the Engineer shall be given a Class 2 rubbed finish.

907-804.03.19.3--Class 2, Rubbed or Spray Finish.

907-804.03.19.3.1--Rubbed Finish. After removal of forms, the Class 1 finish shall be completed and the rubbing of concrete shall be started as soon as its condition will permit. Immediately before starting this work, the concrete shall be kept thoroughly saturated with water for at least three hours. Surfaces shall be rubbed with a medium course Carborundum stone using a small amount of mortar on its face. The mortar shall be composed of cement and sand mixed in the proportions used in the concrete being finished. Rubbing shall be continued until all form marks, projections, and irregularities have been removed, all voids are filled, and a uniform surface has been obtained. The paste produced by this rubbing shall be left in place at this time.

After all concrete above the surface being treated has been cast, the final finish shall be obtained by rubbing with a fine Carborundum stone and water. This rubbing shall continue until the entire surface is of a smooth texture and uniform color.

After the final rubbing is completed and the surface has dried, it shall be rubbed with burlap to remove loose powder and objectionable marks.

907-804.03.19.3.2--Spray Finish. Prior to the spray finish, the concrete shall be given a Class 1 finish in accordance with Subsection 907-804.03.19.2, supplemented if necessary with a grout meeting the requirements of Subsection 714.11 with fine aggregate modified to require 100 percent passing the No. 16 Sieve.

Grout shall be applied with burlap pads or float sponges, and as soon as the grout has dried the surface shall be brushed to remove all loose grout and the surface left smooth and free of air holes. Surfaces to be sprayed shall be free of efflorescence, flaking coatings, dirt, oil, and other foreign substances. Prior to application of the spray finish, the surfaces shall be free of moisture, as determined by sight and touch, and in a condition consistent with the manufacturer's published recommendations.

The spray finish material shall meet the requirements of Subsection 714.12 and shall be listed on of Approved Sources of Materials. The spray finish shall be applied with heavy duty spray equipment capable of maintaining a constant pressure as necessary for proper application. The material shall be applied as recommended by the manufacturer except the rate of application shall not be less than one gallon per 50 square feet of surface area without prior written approval of the Engineer.

The completed finish shall be tightly bonded to the structure and present a uniform appearance and texture equal to or better than a rubbed finish. If necessary, additional coats shall be sprayed to produce the desired surface texture and uniformity. Upon failure to adhere positively to the

structure without chipping or cracking or to attain the desired surface appearance, the coatings shall be completely removed and the surface given a rubbed finish in accordance with 907-804.03.19.3.1, or other approved methods shall be used to obtain the desired surface finish to the satisfaction of the Engineer without additional cost to the State.

907-804.03.19.4--Classes 3, 4, and 5 Finishes. If required, specifications for these finishes will be contained in the special provisions.

907-804.03.19.5--Class 6, Floated Surface Finish. After the concrete has been deposited in place, it shall be consolidated and the surface shall be struck off by means of a strike board and floated with a wooden or cork float. An edging tool shall be used on edges and expansion joints. The surface shall not vary more than 1/8 inch under a 10-foot straightedge. The surface shall have a granular or matte texture which will not be slick when wet.

907-804.03.19.6--Required Finishes for Various Surfaces.

907-804.03.19.6.1--General. Unless otherwise specified, the top surface of sidewalks, the top horizontal surfaces of footings, and top slabs of box bridges, box culverts, or other structures shall be given a Class 6 finish. All formed concrete surfaces shall be given a Class 1 finish, except on surfaces which are completely enclosed, such as the inside surfaces of cells of box girders, the removal of fins and form marks and the rubbing of mortared surfaces to a uniform color will not be required.

In reference to finishing, exposed surfaces are surfaces or faces which may be seen after all backfill has been placed. Exposed surfaces requiring a Class 2 finish shall be finished at least one foot below the ground line or the low water elevation, whichever is higher.

The Class 2 finish shall be made upon a Class 1 finish. After the removal of forms the Class 1 finish shall be completed and the rubbing of concrete shall be started as soon as the condition of the concrete will permit.

Bridge floors shall be finished in accordance with Subsection 907-804.03.19.7.

907-804.03.19.6.2--Finishing Formed Concrete Surfaces of Box Bridges, Box Culverts, Pipe Headwalls, and Minor Structures. The exposed surfaces of wing walls and parapets of box bridges and box culverts to be used as vehicular or pedestrian underpasses shall be given a Class 2 finish. Exposed surfaces of other box culverts or box bridges, pipe culvert headwalls, and other minor structures shall be given a Class 1 finish unless otherwise indicated on the plans.

The exposed surfaces of retaining walls including copings and parapets shall receive a Class 2 finish.

907-804.03.19.6.3--Finishing Formed Concrete Surface of Bridges. All formed concrete bridge surfaces which are exposed shall have a Class 1 or 2 finish as set forth herein unless designated otherwise on the plans.

Bridges with designated surfaces for Class 2 finish are classified as follows:

Group A - Bridges over highways, roads and streets.
Group B - Bridges over waterways and railroads.
Group BB - Twin or adjacent bridges of Group B category.

When a Group B or BB bridge also spans a highway, road or street, exposed concrete surfaces shall be finished in accordance with Group A requirements.

(A) Superstructures. Concrete surfaces to be given a Class 2 finish shall be the exposed surfaces of wings and rails and other exposed surfaces indicated by a double line in Figures 804-1, 804-2, and 804-3.

When a Group B or BB also spans a highway, road or street, the superstructure of spans over and extending one span in each direction beyond the lower level highway, road or street shall be given a Class 2 finish as shown for Group A.

(B) Substructures. Concrete surfaces to be given a Class 2 finish are as follows:

Group A. Exposed surfaces of abutments, end bents, end bent posts, wing walls, railing, retaining walls, parapets, copings, piers, columns, piles, caps, struts or walls between columns or piles, encasement of steel piles, arch rings and spandrel walls.

Group B and BB. Exposed surfaces of abutments, wing walls, end bent posts, railing, retaining walls, parapets and copings.

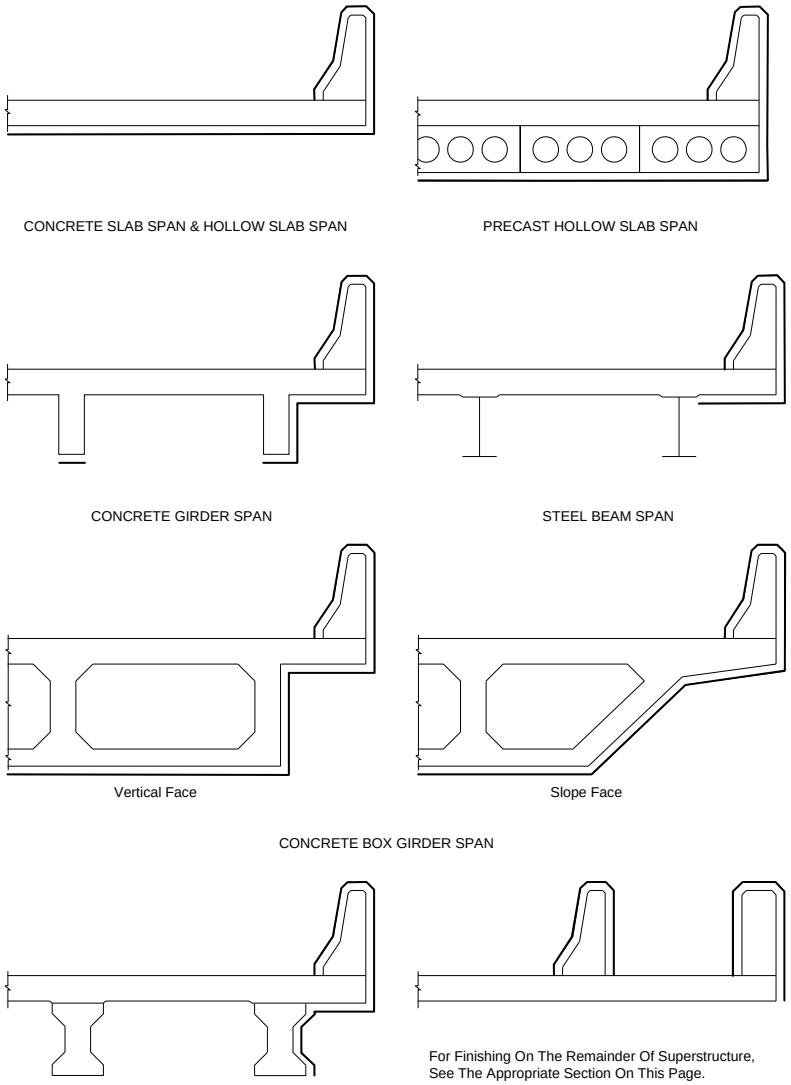

GROUP "A"

BRIDGES OVER HIGHWAYS, ROADS & STREETS

CLASS 2 FINISH - BRIDGE SUPERSTRUCTURES - FIG. 804-1

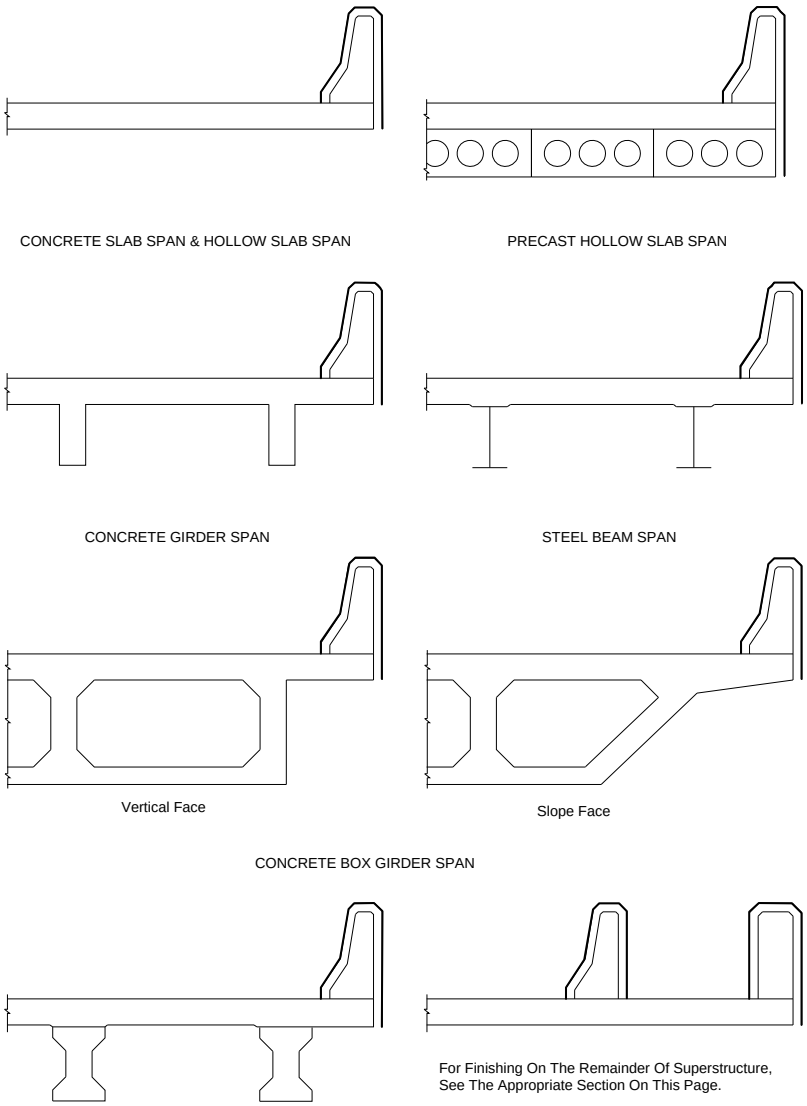

GROUP "B"

BRIDGES OVER WATERWAYS AND BRIDGES OVER RAILROAD TRACKS

CLASS 2 FINISH - BRIDGE SUPERSTRUCTURES - FIG. 804-2

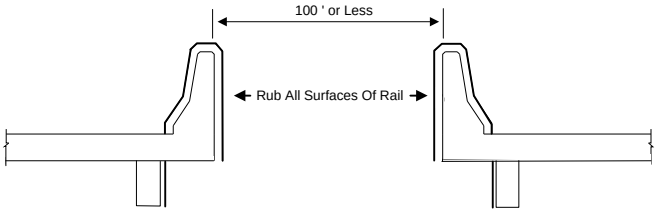

GROUP "B B" - ADJACENT BRIDGES

GROUP "B B"

TWIN or DUAL BRIDGES

CLASS 2 FINISH - BRIDGE SUPERSTRUCTURES - FIG. 804-3

907-804.03.19.7--Finishing Bridge Decks.

907-804.03.19.7.1--General. Concrete bridge decks shall be struck off and finished by the method(s) designated on the plans.

In the event a method is not designated, the Contractor may use either the longitudinal or transverse method subject to the requirements contained in these specifications.

Except when indicated otherwise on the plans, the finish of the bridge deck shall be either a belt finish, a broom finish, or one of the following drag methods: pan, double pan, burlap, or pan and burlap. Manual finishing of the bridge deck shall be performed only in areas inaccessible by the finishing equipment mounted to the strike-off screed, but shall not hinder the requirements for curing in accordance with Subsection 907-804.03.17.1. The surface texture specified and surface requirements shall be in accordance with the applicable requirements of Subsections 501.03.17 and 501.03.18 modified only as the Engineer deems necessary for bridge deck construction operations.

At no time shall water on the surface of the concrete from bleeding, fogging, curing, or other sources be worked into the concrete or used as an aid for finishing.

Regardless of the method of finishing selected, requirements for curing per Subsection 907-804.03.17 shall be completed within the specified time limits. If the requirements in Subsection 907-804.03.17 are not completed within the specific time limits, the Contractor shall cease operations, revise his operations up to and including acquiring new or additional equipment or additional personnel in order to satisfy the requirements in Subsection 907-804.03.17, and, on approval from the Engineer, resume operations

907-804.03.19.7.2--Longitudinal Method. The longitudinal method may be used for repairs to bridge decks or bridge widening projects. For bridge widening projects, curing in accordance with Subsections 907-804.03.17 shall be completed within 30 minutes of initial strike-off for bridges without skew and within 35 minutes of initial strike-off for bridges with skew.

The longitudinal method requires that the strike-off screed be supported on accurately graded and supported bulkheads or templates placed across the full width at the end(s) of the pour. Before the concrete is placed, approved fixed templates or wooden bulkheads of not less than 1¼-inch lumber shall be placed perpendicular to the centerline of the roadway, or in the case of skew bridges at the angle of skew. At least one dry run shall be made the length of each pour with a "tell-tale" device attached to the screed to assure the specified clearance to the reinforcing steel. The upper surface of the template or bulkheads shall be accurately set to conform to the required grade and crown.

Special attention shall be given to the gutter lines where the strike-off screed cannot reach. The gutters shall be finished by hand and tested with the straight edge. Floor drains shall be set lower than the finished gutter line and finished over. After initial set, the concrete shall be dished out and finished around the drains to form an outlet.

After the concrete has been deposited and rough graded, it shall be struck off by means of a strike-off screed resting on the bulkheads or fixed templates. The strike-off screed shall be of a type satisfactory to the Engineer and shall have sufficient strength to retain its shape under all working conditions. The final surface shall comply with the applicable requirements of Subsections 501.03.17.6 and 501.03.18, and unless otherwise specified in the contract, the final finish under this method shall be the belt finish.

In general, the overall strike-off screed should be trussed, with bracing heavy enough to support the weight of a man without deflecting, and should be adjustable for camber and correction of sag.

The strike-off screed will ride on the bulkheads or fixed templates at the ends of the section being finished. Care shall be taken to see that the bulkhead or fixed template elevations are accurately set since the entire span surface will be controlled by them. The manipulation of the screed shall be such that neither end is raised from the bulkheads or templates during the process.

The concrete shall be struck off by beginning at one curb and proceeding entirely across the span. A slight excess of concrete shall be kept in front of the cutting edge at all times. This operation shall be repeated at least three times. In each case, the strike-off screed shall be picked up and carried back to the point of beginning. No backward strokes will be allowed. The strike-off screed shall be moved along the bulkheads or fixed templates with a combined longitudinal and transverse motion. This operation may be manual or mechanical. Standing or walking in the fresh concrete ahead of the strike-off screed will not be permitted.

907-804.03.19.7.3--Transverse Method. The transverse method requires that the screeding equipment be supported on accurately graded and supported rails placed beyond the gutter lines and parallel with the centerline of the bridge.

The machine shall be so constructed and operated as to produce a bridge deck of uniform density with minimum manipulation of the fresh concrete and achieved in the shortest possible time. Manual transverse methods of screeding will not be permitted.

The finishing machine shall be supported on vertically adjustable rails set a sufficient distance from the gutter line to allow free movement of the screed from gutter line to gutter line. Satisfactory means of load distribution with minimum rail deflection shall be provided. The screed rails for a deck pour shall be completely in place for the full length of the pour and shall be firmly secured prior to placing concrete. The screed rails shall be adjusted as necessary to compensate for settlement and deflection occurring during the screeding operations. Supports for the screed rail shall be located directly over slab overhang support brackets as referenced in Subsection 907-804.03.14.1.

At least one dry run shall be made the length of each pour with a "tell-tale" device attached to the screed carriage to assure the specified clearance to the reinforcing steel.

The screed shall be equipped with a metal cutting edge or other approved mechanical means for accurately fine grading the plastic concrete to the required grade and surface smoothness and shall be supported by a bridging structure sufficiently rigid and heavy to perform operations

satisfactorily on concrete of minimum slump without vibration, distortion, and wrecking of forms. The screed shall be mechanically actuated to deliver the screeding action and for travel in a longitudinal direction at a uniform rate along the bridge deck.

The screed shall complete sufficient passes to strike off all of the excess concrete with ample mortar along the entire leading edge to assure filling of low spots. Care shall be taken to remove all objectionable material from the gutters where final hand finishing will be required.

The selection of the transverse method may require the Contractor to furnish bridge deck concrete which contains an approved water-reducing set-retarding admixture in the quantities approved by the Engineer at no additional cost to the State. See Subsection 713.02 for more information.

Other finishing requirements shall be in accordance with the general requirements in Subsection 907-804.03.19.7.1 and as specified on the plans.

907-804.03.19.7.4--Acceptance Procedure for Bridge Deck Smoothness. After the bridge decks and bridge end slabs are completed and preferably before the construction of the bridge railing, they shall be tested for ride quality using a Contractor furnished profilograph. Profile Index Values shall be determined in accordance with Department SOPs and these specifications. The profilograph shall meet the requirements of Subsection 907-804.03.19.7.5. Profiles will be obtained in the wheel paths of the main thru lanes and, where conditions allow, in the wheel paths of any auxiliary lanes or tapers. Profile Index Values for bridge decks and bridge end slabs shall be obtained for all state roads with four lanes or more, on state roads three lanes or less where the current traffic count is 2000 ADT or higher, or as designated on the plans. Ride quality tests will begin at a point where the rearmost wheel of the profilograph is as close to the beginning of the bridge end slab as possible and shall proceed forward across the remainder of the bridge end slab, across the bridge deck and continue across the next bridge end slab to a point where the front-most wheel of the profilograph reaches the far-most edge of the bridge end slab. Bridges and bridge end slabs not requiring a ride quality test must meet a 1/8 inch in 10-foot straightedge requirement in longitudinal and transverse directions. Bridges in horizontal curves having a radius of less than 1000 feet at the centerline and bridges within the superelevation transition of such curves are excluded from a test with the profilograph.

The Profile Index Value for bridge decks including the bridge end slabs shall be averaged for the left and right wheel path for each lane and where applicable, each auxiliary lane and taper, and shall not exceed 65 inches per mile for each lane. Auxiliary lanes, tapers, shoulders and other areas that are not checked with the profilograph, shall meet a 1/8 inch in 10-foot straightedge check made transversely and longitudinally across the deck or slab. In addition, individual bumps or depressions exceeding 0.3 of an inch, when measured from a chord length of 25 feet, shall be corrected and the surface shall meet a 1/8 inch in 10-foot straightedge check made transversely across the deck or slab.

Bridge decks and bridge end slabs not meeting the preceding requirements shall be corrected. Corrective work shall be done at no additional cost to the Department. Corrective work shall consist of grinding the bridge deck in accordance with this specification. All corrective work shall precede final surface texturing. After completion of final surface texturing, all surface areas

corrected by grinding shall be sealed with a nonstaining 40% minimum alkylalkoxysilane penetrating sealant applied per the manufacturer's directions.

In case the bridge end slabs are to be constructed on a future project, the bridge deck(s) alone shall be tested for ride quality using the acceptance procedure outlined above, except that the ride quality test will begin at a point where the rearmost wheel of the profilograph is as close to the beginning of the bridge as possible and shall proceed forward across the bridge deck to a point where the front-most wheel of the profilograph reaches the far-most edge of the bridge.

Expansion joint installation shall be delayed and the joint temporarily bridged to facilitate operation of the profilograph and grinding equipment across the joint wherever feasible.

It shall be the Contractor's responsibility to schedule profilograph testing. The Contractor shall notify the Department at least five (5) days in advance of profilograph testing. The Contractor shall ensure that the area to be tested has been cleaned and cleared of all obstructions. Profilograph testing of bridge decks and bridge end slabs shall be performed by the Contractor under supervision of the Engineer. All profilograph testing shall be performed at no additional cost to the Department. The Contractor will be responsible for traffic control associated with this testing operation.

907-804.03.19.7.4.1--Grinding Bridge Decks.

907-804.03.19.7.4.1.1--Equipment. The grinding equipment shall be a power driven, self-propelled machine that is specifically designed to smooth and texture portland cement concrete pavement with diamond blades. The effective wheel base of the machine shall not be less than 12.0 feet. It shall have a set of pivoting tandem bogey wheels at the front of the machine and the rear wheels shall be arranged to travel in the track of the fresh cut pavement. The center of the grinding head shall be no further than 3.0 feet forward from the center of the back wheels.

The equipment shall be of a size that will cut or plane at least 3.0 feet wide. It shall also be of a shape and dimension that does not encroach on traffic movement outside of the work area. The equipment shall be capable of grinding the surface without causing spalls at cracks, joints, or other locations.

907-804.03.19.7.4.1.2--Grinding. The grinding areas will be determined by the Contractor and approved by the Engineer. The Contractor shall develop and submit to the Engineer for approval a Grinding Plan. The Contractor shall allow up to 45 days for the Department to review the Plan prior to starting any grinding operations. This plan shall include as a minimum:

1) Name of the project superintendent in responsible charge of the grinding operation.
2) List and description of all equipment to be used.
3) Maximum depth of each pass allowed by the grinding equipment.
4) Maximum width of each pass allowed by the grinding equipment.
5) Details of a sequence of the grinding operation.
6) Complete data from Profilograph runs, based on a 0.3 inch bump height, for each wheel path over the entire bridge including bridge end slabs, which shall include profile index,

bump locations (in stations), bump heights and proposed final cross-slopes. When a computerized profilograph is used, a complete printout of the profile including the header information for each wheel path will be required.

7) Data showing reinforcing steel clearance in all areas to be ground.
8) A detailed drawing of the deck showing areas to be ground with station numbers and grinding depths clearly indicated.
9) A description of grinding in areas where drains are in conflict with grind areas.
10) Details of any changes in deck drainage, anticipated ponding, etc.

The Engineer will evaluate the grinding plan for conformance with the plans and specifications, after which the Engineer will notify the Contractor of any additional information required and/or changes that may be needed. Any part of the plan that is unacceptable will be rejected and the Contractor shall submit changes for reevaluation. All approvals given by the Engineer shall be subject to trial and satisfactory performance in the field, and shall not relieve the Contractor of the responsibility to satisfactorily complete the work.

The construction operation shall be scheduled and proceed in a manner that produces a uniform finished surface. Grinding will be accomplished in a manner that eliminates joint or crack faults while providing positive lateral drainage by maintaining a constant cross-slope between grinding extremities in each lane. Auxiliary or ramp lane grinding shall transition as required from the mainline edge to provide positive drainage and acceptable riding surface.

The operation shall result in a finished surface that conforms as close as possible to the typical cross-section and the requirements specified in Subsection 907-804.03.19.7.4.1.3.

The Contractor shall establish positive means for removal of grinding residue. Residue shall not be permitted to flow across lanes used by public traffic or into gutters or drainage facilities.

907-804.03.19.7.4.1.3--Final Surface Texture. The grinding process shall produce a finish surface that is as close as possible to grade and uniform in appearance with a longitudinal line type texture. The line type texture shall contain parallel longitudinal corrugations that present a narrow ridge corduroy type appearance. The peaks of the ridges shall be approximately 1/16 inch higher than the bottoms of the grooves with approximately 53 to 57 evenly spaced grooves per foot. Grinding chip thickness shall be a minimum of 0.080 inches thick.

The finished bridge decks and bridge end slabs shall be retested for riding quality using a Contractor furnished profilograph meeting the requirements of Subsection 907-804.03.19.7.5. The finished results shall meet the following conditions:

(a) Individual bumps or depressions shall not exceed 0.3 inches when measured from a chord length of 25 feet.
(b) The final index value for the bridge deck and bridge end slabs shall be an average of both the right and left wheel paths of each lane and shall not exceed 65 inches per mile.

The final profilogram will be furnished to the Engineer for informational purposes.

907-804.03.19.7.5--Profilograph Requirements. The smoothness of the bridge deck will be determined by using a California Profilograph to produce a profilogram (profile trace) at each designated location. The surface shall be tested and corrected to a smoothness index as described herein with the exception of those locations or specific projects that are excluded from a smoothness test with the profilograph.

The profilograph, furnished and operated by the Contractor under supervision of the Engineer, shall consist of a frame at least 25 feet in length supported upon multiple wheels having no common axle. The wheels shall be arranged in a staggered pattern so that no two wheels will simultaneously cross the same bump. A profile is to be recorded from the vertical movement of a sensing mechanism. This profile is in reference to the mean elevation of the contact points established by the support wheels. The sensing mechanism, located at the mid-frame, may consist of a single bicycle-type wheel or a dual-wheel assembly consisting of either a bicycle-type (pneumatic tire) or solid rubber tire vertical sensing wheel and a separate bicycle-type (pneumatic tire) longitudinal sensing wheel. The wheel(s) shall be of such circumference(s) to produce a profilogram recorded on a scale of one (1) inch equal to 25 feet longitudinally and one (1) inch equal to one (1) inch (full scale) vertically. Motive power may be provided manually or by the use of a propulsion unit attached to the center assembly. In operation, the profilograph shall be moved longitudinally along the pavement at a speed no greater than 3 MPH so as to reduce bounce as much as possible. The testing equipment and procedure shall comply with the requirements of Department SOP.

The Contractor may elect to use a computerized version of the profilograph in lieu of the standard profilograph. If the computerized version of the profilograph is used, it shall meet the requirements of Subsection 907-804.03.19.7.5.1.

907-804.03.19.7.5.1--Computerized Profilograph.

907-804.03.19.7.5.1.1--General The computerized profilograph, furnished and operated by the Contractor under the supervision of the Engineer, shall be equipped with an on-board computer capable of meeting the following conditions.

Vertical displacement shall be sampled every three (3) inches or less along the bridge deck. The profile data shall be bandpass filtered in the computer to remove all spatial wavelengths shorter than two (2) feet. This shall be accomplished by a third order, low pass Butterworth filter. The resulting band limited profile will then be computer analyzed according to the California Profilograph reduction process to produce the required inches per mile index. This shall be accomplished by fitting a linear regression line to the length of bridge. This corresponds to the perfect placement of the blanking band bar by a human trace reducer. Scallops above and below the blanking band are then detected and totaled according to the California protocol. Bump/Dip analysis shall take place according to the California Profilograph reduction process.

The computerized profilograph shall be capable of producing a plot of the profile and a printout which will give the following data: Stations every twenty five (25) feet, bump/dip height and bump/dip length of specification (3/10 of an inch and 25 feet respectively), the blanking band width, date of measurement, total profile index in inches per mile for the measurement, total length

of the measurement, and the raw inches for each segment.

907-804.03.19.7.5.1.2--Mechanical Requirements. The profilograph shall consist of a frame twenty five (25) feet long supported at each end by multiple wheels. The frame shall be constructed to be easily dismantled for transporting. The profilograph shall be constructed from aluminum, stainless steel and chromed parts. The end support wheels shall be arranged in a staggered pattern such that no two wheels cross a transverse joint at the same time. The relative smoothness shall be measured by the vertical movement of an eight (8) inch or larger diameter sensing wheel at the midpoint of the 25-foot frame. The horizontal distance shall be measured by a twenty (20) inch or larger diameter pneumatic wheel. This profile shall be the mean elevation referenced to the twelve points of contact with the pavement established by the support wheels. Recorded graphical trace of the profile shall be on a scale of one inch equals one inch (full scale) vertical motion of the sensing wheel and one inch equals 25 feet horizontal motion of the profilograph.

907-804.03.19.7.5.1.3--Computer Requirements. The computer shall have the ability to produce output on sight for verification. The computerized output shall indicate the profile index for each specified section of bridge deck. Variable low and high pass third-order Butterworth filtering options shall be available. The printout shall be capable of showing station marks automatically on the output. Blanking band positioning for each specified section of the bridge deck shall be placed according to the least squares fit line of the collected data. Variable bump and dip tests shall be available to show "must correct" locations on the printout. The computer must have the ability to display on screen "must correct" conditions and alert the user with an audible warning when a "must correct" location has been located. The computer must have the ability to store profile data for later reanalysis. The measurement program must be menu driven and PC compatible. User selected options, identification, calibration factors, and time and date stamps shall be printed at the top of each printed report for verification. The control software must be upgradeable. A power source shall be included for each profilograph and be capable of supplying all power needs for a full days testing.

907-804.03.19.8--Finishing Horizontal Surfaces of Footings or Top Slabs of Box Bridges, Culverts, or Other Structures. The finishing of horizontal surfaces of footing or top slabs of box bridges, culverts, or other structures shall be achieved by placing an excess of material in the form and removing or striking off the excess with a template, forcing the coarse aggregate below the mortar surface. After the concrete has been struck off the surface shall be given a Class 6 finish.

907-804.03.19.9--Finishing Exposed Surfaces of Sidewalks. After the concrete has been deposited in place it shall be consolidated and the exposed surface shall be given a Class 6 finish. An edging tool of the required radius shall be used on all edges and at all expansion joints. The surface shall have a granular texture which will not be slick when wet.

Sidewalk surfaces shall be laid out in blocks with an approved grooving tool as shown on the plans or as directed.

907-804.03.20--Opening Bridges.

907-804.03.20.1--Public Traffic. Unless otherwise specified, concrete bridge decks shall be closed to public highway traffic for a period of at least 21 days after placing concrete.

907-804.03.20.2--Construction Traffic. Unless otherwise specified, concrete bridge decks shall be closed to construction traffic for the time required for curing in Subsection 907-804.03.17 and the minimum required compressive strength for the concrete placed is obtained.

907-804.03.21--Final Cleanup. Upon completion of the work all equipment, surplus materials, forms, and waste material shall be removed, the bridge cleaned, and the site of the work given a final cleanup.

907-804.03.22--Precast-Prestressed Concrete Bridge Members.

907-804.03.22.1--General. All installations and plants for the manufacture of precast-prestressed bridge members shall be PCI (Precast / Prestressed Concrete Institute) Certified. Bridge members manufactured in plants or installations not so approved will not be accepted for use in the work. The Contractor or other manufacturer shall employ a technician skilled in the adopted system of prestressing to supervise the manufacturing operations. This technician shall be certified according to the guidelines of this specification. The Contractor shall develop and implement a Quality Control Program as per Division I of PCI Quality Control Manual, 4th Edition. The Quality Control Program shall be submitted to the District Materials Engineer for approval.

907-804.03.22.2--Stressing Requirements. The jacks for stressing shall be equipped with accurate calibrated gauges for registering the jacking pressure. Means shall be provided for measuring elongation of strands to at least the nearest 1/16 inch.

Prior to beginning work, the Contractor or manufacturer shall have all jacks to be used, together with their gauges, calibrated by an approved laboratory. All jacks and gauges shall have an accuracy of reading within two percent. The testing agency shall furnish the Engineer a statement certifying that the jacks and gauges meet this requirement. During the progress of the work, if a gauge appears to be giving erratic results or if the gauge pressure and elongations indicate materially differing stresses, recalibration will be required.

Calibration of jacks and gauges shall be repeated at intervals deemed necessary by the Engineer. These intervals for calibration shall not exceed one year.

Shop drawings of prestressed beams, including an erection plan, shall be submitted in duplicate to the Bridge Engineer for approval prior to manufacture of members.

907-804.03.22.2.1--Methods. Plans for the particular bridge members will show prestressing by one of the following methods:

(A) Pretensioning. The prestressing strands are stressed initially. After the concrete is placed, cured, and has attained the compressive strength shown on the plans, the stress is transferred to the member. The method used for pretensions shall be in accordance to Division V of PCI Quality Control Manual, 4th Edition.

(B) Posttensioning. The posttensioning tendons are installed in voids or ducts and are stressed and anchored after development of the compressive strength specified on the plans. The voids or ducts are then pressure grouted.

(C) Combined Method. Part of the reinforcing is pretensioned and part posttensioned. Under this method all applicable requirements for the two methods specified shall apply to the respective stressing elements being used.

907-804.03.22.2.2--Alternate Details for Prestressed Members. In the event that the Contractor / Manufacturer desires to use materials or methods that differ in any respect from those shown on the plans or described in these specifications, the Contractor shall submit for approval full plan details on acceptable tracings suitable for reproduction and specifications which shall become the property of the Department. In order for alternate materials and/or methods to be considered, they will be required to comply fully with the following:

A. Provisions equal to those stipulated in these specifications.
B. Current AASHTO Specifications.
C. Recommendations of materials manufacturer.
D. Camber tolerance of beams and spans shown on plans.

Note: Alternate materials and methods will not be authorized on Federal-Aid Projects.

The Engineer shall be the sole judge as to the adequacy and propriety of any variation of materials or methods.

907-804.03.22.2.3--Stressing Procedure.

(A) General. Stressing shall be performed by suitable jacks working against unyielding anchorages and capable of maintaining the required stress for an indefinite period without movement or yielding. Strands may be stressed singularly or in a group.

The tension to be applied to each strand shall be as shown on the plans. The tension shall be measured by both jacking gauges and elongations in the strands and the result shall check within close limits.

It is anticipated that there will possibly be a difference in indicated tension between jack pressure and elongation of about five (5) percent. In this event, the discrepancy shall be placed on the side of slight overstress rather than understress.

In the event of an apparent discrepancy between gauge pressure and elongation of as much as five (5) percent, the entire operation shall be carefully checked, and the source of error determined before proceeding further.

Elongation is to be measured after the strands have been suitably anchored, and all possible slippage at the anchorages has been eliminated.

In all stressing operations, the stressing force shall be kept as nearly symmetrical about the vertical axis of the member as practicable.

(B) Pretensioning. All strands to be prestressed shall be brought to a uniform initial tension prior to being given their full pretensioning. This uniform initial tension of approximately 1000 to 2000 pounds shall be measured by suitable means such as a dynamometer so that its value can be used as a check against elongation computed and measured.

After the initial tensioning, the strand or group shall be stressed until the required elongation and jacking pressure is within the limits specified.

When the strands are stressed in accordance with the plan requirements and these specifications and all other reinforcing is in place, the concrete shall be placed in the prepared forms.

Strand stress shall be maintained until the concrete between anchorages has attained the required compressive strength as determined by cylinder tests, after which the strands shall be cut off flush with the ends of column members, and cut as shown on the plans for beams, girders, etc. Strands shall be cut or released in such a manner that eccentricity of prestress will be kept to a minimum and no damage to the member will result. The strand cutting pattern shall be as shown on the plans or as approved by the Bridge Engineer.

(C) Posttensioning. For all posttensioning tendons/bars the anchor plates shall set exactly normal in all directions to the axis of the tendon/bar. Parallel wire anchorage cones shall be recessed within the beams. Tensioning shall not take place until the concrete has reached the compressive strength shown on the plans.

Elongation and jacking pressures shall make appropriate allowance for all possible slippage or relaxation of the anchorage. Posttensioning tendons/bars shall be stressed in the order and manner shown on the plans.

The units shall be tensioned until the required elongations and jacking pressures are attained and reconciled within the limits specified in Subsection 907-804.03.22.2.3(A) with such overstresses as approved by the Engineer for anchorage relaxation.

Independent references shall be established adjacent to each anchorage to indicate any yielding or slippage that may occur between the time of initial stressing and final release of the strands.

Straight tendons/bars may be tensioned from one end. Unless otherwise specified, curved tendons shall be stressed by jacking from both ends of the tendons.

(D) Combined Method. In the event that girders are manufactured with part of the reinforcement pretensioned and part posttensioned, the applicable portions of the requirements listed herein shall apply to each type.

907-804.03.22.3--Manufacture.

907-804.03.22.3.1--Forms. The forms used for precast-prestressed bridge members shall meet the requirements of Division II of the PCI Quality Control Manual, 4th Edition.

907-804.03.22.3.2--Placing and Fastening Steel. Placing and fastening of all steel used for precast-prestressed bridge members shall meet the requirements of Division V of the PCI Quality Control Manual, 4th Edition.

907-804.03.22.3.3--Holes for Prestressing Tendons/Bars. Holes provided in girders for prestressing tendons/bars shall be formed by means of inflatable rubber tubing, flexible metal conduit, metal tubing, or other approved means.

907-804.03.22.4--Placing and Curing Concrete.

907-804.03.22.4.1--Placing. The placing of concrete shall meet the applicable requirements of Division III of PCI Quality Control Manual, 4th Edition.

907-804.03.22.4.2--Curing. Initial and accelerated curing of all members shall meet the applicable requirements of Division IV of PCI Quality Control Manual, 4th Edition except for the following listed requirements.

The source of heat for accelerated cure shall be steam. Calibrated thermocouples shall be implanted into the concrete members to monitor areas expected to have maximum and minimum heat. Curing methods and procedures listed in the prestress producer's PCI Quality System Manual shall be approved by the Department before their implementation.

907-804.03.22.4.3--Removal of Side Forms. Side forms may be removed after the concrete has attained sufficient strength to maintain a true section. In order to obtain "sufficient strength", it may be necessary to cure members for 12 hours or more as prescribed in Subsection 907-804.03.22.4.2, or to attain a minimum compressive strength of 1000 psi.

If high-early-strength concrete is obtained by use of low slump (0 to 1.5-inch) concrete, vacuum process, or other approved methods, side forms may be removed earlier; however, approval of the methods and revision from normal schedules will be made only after inspections by the District Materials Engineer and Materials Division have determined that satisfactory results will be attained by the methods and schedules proposed.

907-804.03.22.4.4--Grouting. The holes through posttensioned members in which the tendons are installed shall be equipped with approved grouting vents. All prestressing tendons to be bonded shall be free of dirt, loose rust, grease, or other deleterious substances. Before grouting, the ducts shall be free of water, dirt, and other foreign substances. The ducts shall be blown out with compressed air until no water comes through the ducts. For long members with draped tendons an open tap at low points may be necessary. After completion of stressing, the annular space between sides of tendon and sides of hole shall be grouted as set in the following paragraphs.

With the grouting vent open at one end of the core hole, grout shall be applied continuously under moderate pressure at the other end until all entrapped air is forced out through the open grout vent, as evidenced by a steady stream of grout at the vent. Whereupon, the open vent shall be closed under pressure. The grouting pressure shall be gradually increased to a refusal of at least 75 psi and held at this pressure for approximately 10 seconds, and the vent shall then be closed under this pressure.

Portland cement grout shall consist of a mixture of:

1	part Type 1 portland cement
1/4	part fly ash
3/4	part washed sand *
4 to 6	gallons of water per bag of cement.

* all passing No. 16 sieve and not more than 5% retained on No. 30

Water-reducing admixtures, subject to approval by the Engineer, shall be used in accordance with the manufacturer's recommendations.

The grout shall be mixed in a mechanical mixer, shall have the consistency of heavy paint, and shall be kept agitated until placed.

Members shall not be moved before the grout has set, ordinarily at least 24 hours at 80°F or higher.

907-804.03.22.5--Finishing and Marking. Units shall be given a Class 1 finish at the plant and shall be given a Class 2 finish after erection when required.

Recesses in girders at end of diaphragm bars, holes left by form ties, and other surface irregularities shall be carefully cleaned and patched with an approved non-shrink commercial grout or a non-shrinkage mortar of the following composition:

1 part Type 1 portland cement
1 1/2 to 2 parts fine sand
1/2 to 3/4 ounces aluminum powder per bag of cement
Approved admixture per Subsection 713.02.
Sufficient water to produce a workable but rather stiff mix.

The units shall be clearly marked in accordance with Department's *Materials Division Inspection, Certification and Testing Manual*.

907-804.03.22.6--Handling, Storage, and Installation. Posttensioned members may be handled immediately after completion of stressing and grout has set. Pretensioned members may be handled immediately after release of tensioning. In either case, the members shall have developed a minimum compressive strength of 4000 psi prior to handling. In the event stressing is not done in a continuous operation, members shall not be handled before they are sufficiently stressed, as determined by the Engineer, to sustain all forces and bending moments due to handling. In the

handling, storage, and transporting of beams or girders, they shall be maintained in an upright position (position as cast) at all times and shall be picked up from points within distance from beam ends equal to beam depth or at pick-up points designated on the plans. Disregard of this requirement and dropping of units may be cause for rejection, whether or not injury to the unit is apparent. Piles shall be picked up and loaded for shipment at points shown by the suspension diagram on the plans. Extreme care shall be used in handling and storing piles to prevent damage. The dropping of a pile may be cause for rejection of same, whether or not there is apparent injury to the member.

Care shall be exercised during the storage, hoisting, and handling of precast units to prevent damage. Damaged units shall be replaced by the Contractor at no additional costs to the State.

When members are stacked for storage, each layer shall be supported at or near the pick-up points. Supports shall be carefully placed in a vertical line in order that the weight of any member will not stress an underlying member. To prevent damage in moving members it is suggested that rigid supports be covered with a cushion of wood or other resilient material.

Members shall not be transported until at least one day after the concrete has reached a compressive strength of 5000 psi or greater strength when shown on the plans.

Piles used in salt water shall not be driven until concrete is seven days old, and air-entrained concrete shall be used in such piles.

After prestressed concrete voided slab units are set, doweled and bolted in their final position the keyways and dowel holes shall be filled with an approved non-shrink grout. Traffic shall not be permitted on the spans for 24 hours after grouting, and heavy construction equipment exceeding 15 tons will not be permitted on the spans for a period of 72 hours after grouting.

Adjacent slab units that mismatch more than one-fourth inch shall be adjusted prior to grouting of the shear keys. The maximum deviation from cross-section and grade (exclusive of camber) at any point shall not exceed one-fourth inch; and when the surface is checked with a ten-foot straightedge applied both parallel and perpendicular to the centerline, the variance shall not exceed one-fourth inch.

In addition to the requirements set out in this section, the applicable requirements of Section 803 shall apply.

907-804.03.22.7--Tolerances for Accepting Precast Prestressed Concrete. Member shall meet the dimension tolerances set by Division VII of PCI Quality Control Manual, 4th Edition.

907-804.03.22.8--Testing of Materials. Concrete and aggregate testing shall meet the requirements of Division VI of PCI Quality Control Manual, 4th Edition, except that the concrete mixture design shall meet the requirements of Subsection 907-804.02.10. Also, in addition to concrete compressive tests samples made for detensioning and 28-day strength, test samples shall be made and tested in order to prove compliance to the requirements of Subsection 907-804.03.22.6 for handling and shipping prestressed members. Compressive strength test cylinders

for detensioning, handling and shipping shall receive the same type curing as the prestressed members for which they represent. Compressive strength samples shall be made each day for each prestress casting bed.

907-804.03.22.9--Testing Personnel. Technicians testing portland cement concrete used in the production of precast-prestressed members shall be PCI Quality Control Technician/Inspector Certified. Each producer of precast-prestressed members shall have at least one PCI Level II certified technician on site during production for Department projects.

907-804.03.22.10--Documentation. The Precast-Prestressed Producer for each precast-prestressed concrete bridge member shall maintain documentation as set forth in the Department's *Materials Division Inspection, Certification and Testing Manual*. Testing and inspection record forms shall be approved by the Central Laboratory and as a minimum contain information listed in Division VI of PCI Quality Control Manual, 4th Edition.

907-804.03.22.11--Use in the Work. Before any precast-prestressed member is incorporated into the work, documentation as described in Subsection 907-804.03.22.10 is required along with visual inspection of the member at the bridge construction site. Project Office personnel as per the Department's *Materials Division Inspection, Certification and Testing Manual* will make visual inspection of the precast-prestressed member at the bridge construction site.

907-804.04--Method of Measurement. Concrete, complete and accepted, will be measured in cubic yards. The concrete volume will be computed from the neat dimensions shown on the plans, except for such variations as may be ordered in writing by the Engineer. The quantity of concrete involved in fillets, scorings, and chamfers one square inch or less in cross-sectional area will be neglected. Deductions shall be made for the following:

(1) The volume of structural steel, including steel piling encased in concrete.
(2) The volume of timber piles encased in concrete, assuming the volume to be 0.80 cubic foot per linear foot of pile.
(3) The volume of concrete piles encased in concrete.

No deduction will be made for the volume of concrete displaced by steel reinforcement, floor drains, or expansion joint material that is one inch or less in width normal to the centerline of the joint. Where railing is bid as a separate item, that portion of the railing above the top of the curb, above the surface of the sidewalk, or above the bridge roadway, as the case may be, will not be included in the measurement of concrete, but will be measured as railing. Massive pylons or posts which are to be excepted from payment for railing and are intended to be measured for as concrete will be so noted on the plans.

When shown on the plans or directed by the Engineer, concrete placed as a seal for cofferdams will be measured by the cubic yard actually in place, except that no measurement will be made of seal concrete placed outside of an area bounded by vertical planes 18 inches outside the neat lines of the footing as shown on the plans or as directed and parallel thereto.

Reinforcing steel will be measured and paid for in pounds as set out in Section 805.

Unless otherwise specified, structural steel will be measured and paid for as set out in Section 810.

Excavation for bridges will be measured and paid for as in Section 801.

Piling will be measured and paid for as set out in Sections 802 and 803.

Railing will be measured and paid for as set out in Section 813.

Prestressed concrete beams and plank will be measured by the linear foot.

Prestressed concrete voided slab units, interior and exterior with railing, and precast concrete caps, intermediate and end cap with winged abutment wall, of the size and type specified will be measured by the unit complete in place and accepted. Railing, winged abutment walls, grout, tie rods, nuts, washers, bearing pads and other appurtenances will not be measured for separate payment.

907-804.05--Basis of Payment. Concrete will be paid for at the contract unit price per cubic yard for the class or classes specified, complete in place. Prestressed concrete beams and plank will be paid for at the contract unit per linear foot of specified size and type.

Prestressed concrete voided slab units and precast caps will be paid for at the contract unit price per each for the specified types and sizes, complete in place and accepted; which price shall be full compensation for furnishing, hauling and erecting the members; including all prestressing reinforcement and other reinforcement in the members. Payment at the contract unit prices bid shall be full compensation for furnishing all materials, equipment, tools, labor and incidentals necessary to complete the work.

Payment will be made under:

907-804-A:	Bridge Concrete, Class ____	- per cubic yard
907-804-B:	Box Bridge Concrete, Class ___	- per cubic yard
907-804-C:	Length Prestressed Concrete Beam, Type ___	- per linear foot
907-804-D:	Length Prestressed Concrete Plank	- per linear foot
907-804-E:	Length Prestressed Concrete Voided Slab, Size Interior	- per each
907-804-F:	Length Prestressed Concrete Voided Slab, Size Exterior	- per each
907-804-G:	Length Precast Concrete Caps, End Unit with Wall	- per each
907-804-H:	Length Precast Concrete Caps, Intermediate Unit	- per each

MISSISSIPPI DEPARTMENT OF TRANSPORTATION

SPECIAL PROVISION NO. 907-815-2 **CODE: (SP)**

DATE: 06/03/2014

SUBJECT: Sediment Control Stone

Section 815, Riprap And Slope Paving, of the 2004 Edition of the Standard Specifications for Road and Bridge Construction, is hereby amended as follows.

907-815.02--Materials. Delete the last paragraph of Subsection 815.02 on page 966, and substitute the following.

Material used for sediment control stone shall be crushed stone or gravel meeting the requirements of Subsection 703.03 for Size No. 57.

907-815.05--Basis of Payment. Delete pay item 815-F on page 970 and substitute the following.

907-815-F: Sediment Control Stone - per cubic yard or ton

S E C T I O N 9 0 5 - P R O P O S A L

Date _____

Mississippi Transportation Commission
Jackson, Mississippi

Sirs: The following proposal is made on behalf of _____
_____ of _____
_____
for constructing the following designated project(s) within the time(s) hereinafter specified.

The plans are composed of drawings and blue prints on file in the offices of the Mississippi Department of Transportation, Jackson, Mississippi.

The Specifications are the current Standard Specifications of the Mississippi Department of Transportation approved by the Federal Highway Administration, except where superseded or amended by the plans, Special Provisions and Notice(s) to Bidders attached hereto and made a part thereof.

I (We) certify that I (we) possess a copy of said Standard and any Supplemental Specifications.

Evidence of my (our) authority to submit the Proposal is hereby furnished. The proposal is made without collusion on the part of any person, firm or corporation. I (We) certify that I (we) have carefully examined the Plans, the Specifications, including the Special Provisions and Notice(s) to Bidders, herein, and have personally examined the site of the work. On the basis of the Specifications, Special Provisions, Notice(s) to Bidders, and Plans, I (we) propose to furnish all necessary machinery, tools, apparatus and other means of construction and do all the work and furnish all the materials in the manner specified. I (We) understand that the quantities mentioned herein are approximate only and are subject to either increase or decrease, and hereby propose to perform any increased or decreased quantities of work at the unit prices bid, in accordance with the above.

I (We) acknowledge that this proposal will be found irregular and/or non-responsive unless a certified check, cashier's check, or Proposal Guaranty Bond in the amount as required in the Advertisement (or, by law) is submitted electronically with the proposal or is delivered to the Contract Administration Engineer prior to the bid opening time specified in the advertisement.

INSTRUCTION TO BIDDERS: Alternate and Optional Items on Bid Schedule.

1. Two or more items entered opposite a single unit quantity WITHOUT DEFINITE DESIGNATION AS "ALTERNATE ITEMS" are considered as "OPTIONAL ITEMS". Bidders may or may not indicate on bids the Optional Item proposed to be furnished or performed WITHOUT PREJUDICE IN REGARD TO IRREGULARITY OF BIDS.
2. Items classified on the bid schedule as "ALTERNATE ITEMS" and/or "ALTERNATE TYPES OF CONSTRUCTION" must be preselected and indicated on bids. However, "Alternate Types of Construction" may include Optional Items to be treated as set out in Paragraph 1, above.
3. Optional items not preselected and indicated on the bid schedule MUST be designated in accordance with Subsection 102.06 prior to or at the time of execution of the contract.
4. Optional and Alternate items designated must be used throughout the project.

I (We) further propose to perform all "force account or extra work" that may be required of me (us) on the basis provided in the Specifications and to give such work my (our) personal attention in order to see that it is economically performed.

I (We) further propose to execute the attached contract agreement (Section 902) as soon as the work is awarded to me (us), and to begin and complete the work within the time limit(s) provided for in the Specifications and Advertisement. I (We) also propose to execute the attached contract bond (Section 903) in an amount not less than one hundred (100) percent of the total of my (our) part, but also to guarantee the excellence of both workmanship and materials until the work is finally accepted.

I (We) shall submit electronically with our proposal or deliver prior to the bid opening time a certified check, cashier's check or bid bond for **five percent (5%) of total bid** and hereby agree that in case of my (our) failure to execute the contract and furnish bond within Ten (10) days after notice of award, the amount of this check (bid bond) will be forfeited to the State of Mississippi as liquidated damages arising out of my (our) failure to execute the contract as proposed. It is understood that in case I am (we are) not awarded the work, the check will be returned as provided in the Specifications.

For Informational Purposes Only

SECTION 905 -- PROPOSAL (CONTINUED)

I (We) hereby certify by digital signature and electronic submission via Bid Express of the Section 905 proposal below, that all certifications, disclosures and affidavits incorporated herein are deemed to be duly executed in the aggregate, fully enforceable and binding upon delivery of the bid proposal. I (We) further acknowledge that this certification shall not extend to the bid bond or alternate security which must be separately executed for the benefit of the Commission. This signature does not cure deficiencies in any required certifications, disclosures and/or affidavits. I (We) also acknowledge the right of the Commission to require full and final execution on any certification, disclosure or affidavit contained in the proposal at the Commission's election upon award. Failure to so execute at the Commission's request within the time allowed in the Standard Specifications for execution of all contract documents will result in forfeiture of the bid bond or alternate security.

Respectfully Submitted,

DATE _____

_____
Contractor

BY _____
Signature

TITLE _____

ADDRESS _____

CITY, STATE, ZIP _____

PHONE _____

FAX _____

E-MAIL _____

(To be filled in if a corporation)

Our corporation is chartered under the Laws of the State of _____ and the names, titles and business addresses of the executives are as follows:

_____
President Address

_____
Secretary Address

_____
Treasurer Address

The following is my (our) itemized proposal.

For Informational Purposes Only

Bridge Repair on I-55 over Hickahala Creek Bridge Nos. 266.8A & 266.8B, known as Federal Aid Project No. BR-0055-04(103) / 107214302 in Tate County.

Line no.	Item Code	Adj Code	Quantity	Units	Description[Fixed Unit Price]
					Roadway Items
0010	201-A001		1	Lump Sum	Clearing and Grubbing
0020	202-B076		2,747	Linear Feet	Removal of Traffic Stripe
0030	203-EX017	(E)	1,000	Cubic Yard	Borrow Excavation, AH, FME, Class B9
0040	203-G003	(E)	450	Cubic Yard	Excess Excavation, FM, AH
0050	209-A004		6,692	Square Yard	Geotextile Stabilization, Type V, Non-Woven
0060	213-B001		1	Ton	Combination Fertilizer, 13-13-13
0070	213-C001		1	Ton	Superphosphate
0080	217-A001		1,312	Square Yard	Ditch Liner
0090	223-A001		1	Acre	Mowing ($50.00)
0100	234-A001		6,500	Linear Feet	Temporary Silt Fence
0110	606-B001		275	Linear Feet	Guard Rail, Class A, Type 1
0120	606-D001		2	Each	Guard Rail, Bridge End Section, Type A
0130	606-E003		2	Each	Guard Rail, Terminal End Section, Non-Flared
0140	619-A5002		7,372	Linear Feet	Temporary Traffic Stripe, Detail, Paint
0150	619-A5005		8,982	Linear Feet	Temporary Traffic Stripe, Detail, Type 2 Tape
0160	619-D1001		48	Square Feet	Standard Roadside Construction Signs, Less than 10 Square Feet
0170	619-D2001		488	Square Feet	Standard Roadside Construction Signs, 10 Square Feet or More
0180	619-F1001		4,320	Linear Feet	Concrete Median Barrier, Precast
0190	619-F2001		4,320	Linear Feet	Remove and Reset Concrete Median Barrier, Precast
0200	619-G4001		96	Linear Feet	Barricades, Type III, Single Faced
0210	619-G5001		25	Each	Free Standing Plastic Drums
0220	619-G7001		2	Each	Warning Lights, Type "B"
0230	620-A001		1	Lump Sum	Mobilization
0240	627-F001		154	Each	One-Way Yellow Reflective Raised Markers
0250	630-F001		14	Each	Delineators, Guard Rail, White
0260	630-F007		240	Each	Delineators, Post Mounted, Single Yellow
0270	907-225-A001		1	Acre	Grassing
0280	907-225-B001		1	Ton	Agricultural Limestone
0290	907-225-C001		2	Ton	Mulch, Vegetative Mulch
0300	907-226-A001		1	Acre	Temporary Grassing
0310	907-234-D001		4	Each	Inlet Siltation Guard
0320	907-234-F001		320	Linear Feet	Turbidity Barrier
0330	907-237-A003		372	Linear Feet	Wattles, 20"
0340	907-249-A001		21	Ton	Riprap for Erosion Control

For Informational Purposes Only

Line no.	Item Code	Adj Code	Quantity	Units	Description[Fixed Unit Price]
0350	907-304-B009	(GT)	4,320	Ton	Granular Material, Class 3, Group D
0360	907-403-A027	(BA1)	445	Ton	9.5-mm, HT, Asphalt Pavement
0370	907-403-A028	(BA1)	593	Ton	12.5-mm, HT, Asphalt Pavement
0380	907-403-A029	(BA1)	890	Ton	19-mm, HT, Asphalt Pavement
0390	907-407-A001	(A2)	539	Gallon	Asphalt for Tack Coat
0400	907-603-ALT22	(S)	1,048	Linear Feet	12" Type A Alternate Pipe
0410	907-618-A001		1	Lump Sum	Maintenance of Traffic
0420	907-619-E3001		2	Each	Changeable Message Sign
0430	907-619-P1001		3,766	Linear Feet	Glare Paddles
0440	907-626-E003		3,950	Linear Feet	6" Thermoplastic Traffic Stripe, Continuous Yellow
0450	907-630-O006		1	Each	Remove and Reset Signs, Post Mounted
0460	907-815-F001	(S)	21	Ton	Sediment Control Stone
				ALTERNATE GROUP AA NUMBER 1	
0470	907-304-F002	(GT)	5,315	Ton	Size 610 Crushed Stone Base
				ALTERNATE GROUP AA NUMBER 2	
0480	907-304-F003	(GT)	5,315	Ton	3/4" and Down Crushed Stone Base
				ALTERNATE GROUP AA NUMBER 3	
0490	907-304-F004	(GT)	5,315	Ton	Size 825B Crushed Stone Base
				Bridge Items	
0500	801-A001	(S)	110	Cubic Yard	Foundation Excavation for Bridges
0510	801-B001	(S)	1	Lump Sum	Cofferdams
0520	803-J001	(S)	2	Each	Pile Restrike
0530	805-A001	(S)	7,742	Pounds	Reinforcement
0540	815-A009	(S)	224	Ton	Loose Riprap, Size 300
0550	815-E001	(S)	332	Square Yard	Geotextile under Riprap
0560	907-803-PP006		1,080	Linear Feet	20" Steel Pipe Piling, Wall Thickness 0.500"
0570	907-804-A018	(S)	73	Cubic Yard	Bridge Concrete, Substructure, Class AA
0580	907-824-PP098		2,800	Square Feet	Bridge Repair, Remove & Reset Riprap, Per Plans

For Informational Purposes Only

CONDITIONS FOR COMBINATION BID

If a bidder elects to submit a combined bid for two or more of the contracts listed for this month's letting, the bidder must complete and execute these sheets of the proposal in each of the individual proposals to constitute a combination bid. In addition to this requirement, each individual contract shall be completed, executed and submitted in the usual specified manner.

Failure to execute this Combination Bid Proposal in each of the contracts combined will be just cause for each proposal to be received and evaluated as a separate bid.

It is understood that the Mississippi Transportation Commission not only reserves the right to reject any and all proposals, but also the right to award contracts upon the basis of lowest separate bids or combination bids most advantageous to the State.

It is further understood and agreed that the Combination Bid Proposal is for comparison of bids only and that each contract shall operate in every respect as a separate contract in accordance with its proposal and contract documents.

I (We) agree to complete each contract on or before its specified completion date.

* * * *

SECTION 905 - COMBINATION BID PROPOSAL (Continued)

Project Number	Pay Item Number	Unit	Unit Price Reduction	Total Item Reduction	Total Contract Reduction
1.					
2.					
3.					
4.					
5.					
6.					
7.					
8.					

For Informational Purposes Only

Project Number	Pay Item Number	Unit	Unit Price Reduction	Total Item Reduction	Total Contract Reduction
9. _____	_____ _____	_____ _____	_____ _____	_____ _____	
10. _____	_____ _____	_____ _____	_____ _____	_____ _____	

(c) If Combination C has been selected, then initial and complete ONE of the following.

_____ I (We) desire to be awarded work not to exceed a total monetary value of $ _____.

_____ I (We) desire to be awarded work not to exceed _____ number of contracts.

For Informational Purposes Only

Certification with regard to the Performance of Previous Contracts or Subcontracts subject to the Equal Opportunity Clause and the filing of Required Reports

The Bidder hereby certifies that he has ____, has not ____, participated in a previous contract or subcontract subject to the Equal Opportunity Clause, as required by Executive Orders 10925, 11114, or 11246, and that he has ____, has not ____, filed with the Joint Reporting Committee, the Director of the Office of Federal Contract Compliance, a Federal Government contracting or administering agency, or the former President's Committee on Equal Employment Opportunity, all reports due under the applicable filing requirements.

_____
(COMPANY)

DATE: _____

NOTE: The above certification is required by the Equal Employment Opportunity Regulations of the Secretary of Labor (41 CFR 60-1.7 (b) (1)), and must be submitted by bidders and proposed subcontractors only in connection with contracts and subcontracts which are subject to the Equal Opportunity Clause. Contracts and Subcontracts which are exempt from the Equal Opportunity Clause are set forth in 41 CFR 60-1.5. (Generally only contracts or subcontracts of $10,000 or under are exempt.)

Currently, Standard Form 100 (EEO-1) is the only report required by the Executive Orders or their implementing regulations.

Proposed prime Contractors and Subcontractors who have participated in a previous contract or subcontract subject to the Executive orders and have not filed the required reports should note that 41 CFR 60-1.7 (b) (1) prevents the award of contracts and subcontracts unless such Contractors submit a report covering the delinquent period or such other period specified by the Federal Highway Administration or by the Director, Office of Federal Contract Compliance, U. S. Department of Labor.

For Informational Purposes Only

MISSISSIPPI DEPARTMENT OF TRANSPORTATION

CERTIFICATION

I,_____,
(Name of person signing bid)

individually, and in my capacity as_____ of
(Title of person signing bid)

_____do hereby certify under
(Name of Firm, partnership, or Corporation)

penalty of perjury under the laws of the United States and the State of Mississippi that_____

_____, Bidder
(Name of Firm, Partnership, or Corporation)

on Project No. **BR-0055-04(103)/ 107214302000**

in **Tate**_____County(ies), Mississippi, has not either

directly or indirectly entered into any agreement, participated in any collusion; or otherwise taken any action in restraint of free competitive bidding in connection with this contract; nor have any of its corporate officers or principal owners.

Except as noted hereafter, it is further certified that said legal entity and its corporate officers, principal owners, managers, auditors and others in a position of administering federal funds:

a) Are not presently debarred, suspended, proposed for debarment, declared ineligible, or voluntarily excluded from covered transactions by any Federal department or agency;

b) Have not within a three-year period preceding this proposal been convicted of or had a civil judgment rendered against them for commission of fraud or a criminal offense in connection with obtaining, attempting to obtain, or performing a public (Federal, State or local) transaction or contract under a public transaction; violation of Federal or State antitrust statutes or commission of embezzlement, theft, forgery, bribery, falsification or destruction of records, making false statements, or receiving stolen property;

c) Are not presently indicted for or otherwise criminally or civilly charged by a governmental entity (Federal, State or local) with commission of any of the offenses enumerated in (b) above; and

d) Have not within a three-year period preceding this application/ proposal had one or more public transactions (Federal, State or local) terminated for cause or default.

Do exceptions exist and are made a part thereof? Yes / No

Any exceptions shall address to whom it applies, initiating agency and dates of such action.

For Informational Purposes Only

Note: Exceptions will not necessarily result in denial of award but will be considered in determining bidder responsibility. Providing false information may result in criminal prosecution or administrative sanctions.

The bidder further certifies that the certification requirements contained in Section XI of Form FHWA 1273, will be or have been included in all subcontracts, material supply agreements, purchase orders, etc. except those procurement contracts for goods or services that are expected to be less than the Federal procurement small purchase threshold fixed at 10 U.S.C. 2304(g) and 41 U.S.C. 253(g) (currently $25,000) which are excluded from the certification requirements.

The bidder further certifies, to the best of his or her knowledge and belief, that:

1) No Federal appropriated funds have been paid or will be paid to any person for influencing or attempting to influence an officer or employee of any Federal agency, a Member of Congress, an officer or employee of Congress, or an employee of a Member of Congress in connection with the awarding of any Federal contract, the making of any Federal grant, the making of any Federal loan, the entering into of any cooperative agreement, and the extension, continuation, renewal, amendment, or modification of any Federal contract, grant, loan, or cooperative agreement.

2) If any funds other than Federal appropriated funds have been paid or will be paid to any person for influencing or attempting to influence an officer or employee of any Federal agency, a Member of Congress, an officer or employee of Congress, or an employee of a Member of Congress in connection with this contract, Standard Form-LLL, Disclosure Form to Report Lobbying, in accordance with its instructions will be completed and submitted.

The certification contained in (1) and (2) above is a material representation of fact upon which reliance is placed and a prerequisite imposed by Section 1352, Title 31, U.S. Code prior to entering into this contract. Failure to comply shall be subject to a civil penalty of not less than $10,000 and not more than $100,000. The bidder shall include the language of the certification in all subcontracts exceeding $100,000 and all subcontractors shall certify and disclose accordingly.

All of the foregoing is true and correct.

Executed on _____ _____

Signature

For Informational Purposes Only

MISSISSIPPI DEPARTMENT OF TRANSPORTATION

SAM.GOV Registration and DUNS Number

Bidders are advised that the Prime Contractor must maintain current registration in the **System for Award Management** (http://www.sam.gov) at all times during the project. A Dun and Bradstreet Data Universal Numbering System (DUNS) Number (http://www.dnb.com) is one of the requirements for registration in the System for Award Management.

Bidders are advised that prior to the award of this contract, they MUST be registered in the System for Award Management.

I (We) acknowledge that this contract cannot be awarded if I (We) are not registered in the System for Award Management prior to the award of this contract. _____ (Yes / No)

I (We) have a DUNS Number . _____ (Yes / No)

DUNS Number: _____

Company Name: _____

Company e-mail address: _____

(6/2015F)

For Informational Purposes Only

SECTION 902

CONTRACT FOR **BR-0055-04(103)/ 107214302000**

LOCATED IN THE COUNTY(IES) OF **Tate**

STATE OF MISSISSIPPI,
COUNTY OF HINDS

This contract entered into by and between the Mississippi Transportation Commission on one hand, and the undersigned contractor, on the other witnesseth;

That, in consideration of the payment by the Mississippi Transportation Commission of the prices set out in the proposal hereto attached, to the undersigned contractor, such payment to be made in the manner and at the time of times specified in the specifications and the special provisions, if any, the undersigned contractor hereby agrees to accept the prices stated in the proposal in full compensation for the furnishing of all materials and equipment and the executing of all the work contemplated in this contract.

It is understood and agreed that the advertising according to law, the Advertisement, the instructions to bidders, the proposal for the contract, the specifications, the revisions of the specifications, the special provisions, and also the plans for the work herein contemplated, said plans showing more particularly the details of the work to be done, shall be held to be, and are hereby made a part of this contract by specific reference thereto and with like effect as if each and all of said instruments had been set out fully herein in words and figures.

It is further agreed that for the same consideration the undersigned contractor shall be responsible for all loss or damage arising out of the nature of the work aforesaid; or from the action of the elements and unforeseen obstructions or difficulties which may be encountered in the prosecution of the same and for all risks of every description connected with the work, exceptions being those specifically set out in the contract; and for faithfully completing the whole work in good and workmanlike manner according to the approved Plans, Specifications, Special Provisions, Notice(s) to Bidders and requirements of the Mississippi Department of Transportation.

It is further agreed that the work shall be done under the direct supervision and to the complete satisfaction of the Executive Director of the Mississippi Department of Transportation, or his authorized representatives, and when Federal Funds are involved subject to inspection at all times and approval by the Federal Highway Administration, or its agents as the case may be, or the agents of any other Agency whose funds are involved in accordance with those Acts of the Legislature of the State of Mississippi approved by the Governor and such rules and regulations issued pursuant thereto by the Mississippi Transportation Commission and the authorized Federal Agencies.

The Contractor agrees that all labor as outlined in the Special Provisions may be secured from list furnished by

It is agreed and understood that each and every provision of law and clause required by law to be inserted in this contract shall be deemed to be inserted herein and this contract shall be read and enforced as though it were included herein, and, if through mere mistake or otherwise any such provision is not inserted, then upon the application of either party hereto, the contract shall forthwith be physically amended to make such insertion.

The Contractor agrees that he has read each and every clause of this Contract, and fully understands the meaning of same and that he will comply with all the terms, covenants and agreements therein set forth.

Witness our signatures this the____ day of _____,_____.

_____
Contractor(s)

By_____

Title_____

Signed and sealed in the presence of:
(names and addresses of witnesses)

_____

MISSISSIPPI TRANSPORTATION COMMISSION

By_____
Executive Director

_____
Secretary to the Commission

Award authorized by the Mississippi Transportation Commission in session on the ____ day of _____,_____, Minute Book No. _____, Page No. _____.

Revised 8/06/2003

For Information Purposes Only

S E C T I O N 9 0 3
PERFORMANCE AND PAYMENT BOND

CONTRACT BOND FOR: **BR-0055-04(103)/ 107214302000**

LOCATED IN THE COUNTY(IES) OF: **Tate**

STATE OF MISSISSIPPI,
COUNTY OF HINDS

Know all men by these presents: that we, _____
(Contractor)
_____ Principal, a _____

residing at_____ in the State of _____

and _____
(Surety)
residing at _____ in the State of _____,

authorized to do business in the State of Mississippi, under the laws thereof, as surety, effective as of the contract date shown below, are held and firmly bound unto the State of Mississippi in the sum of _____

_____

($_____) Dollars, lawful money of the United States of America, to be paid to it for which payment well and truly to be made, we bind ourselves, our heirs, administrators, successors, or assigns jointly and severally by these presents.

The conditions of this bond are such, that whereas the said _____

_____

principal, has (have) entered into a contract with the Mississippi Transportation Commission, bearing the date of _____ day of _____ A.D. _____ hereto annexed, for the construction of certain projects(s) in the State of Mississippi as mentioned in said contract in accordance with the Contract Documents therefor, on file in the offices of the Mississippi Department of Transportation, Jackson, Mississippi.

Now therefore, if the above bounden _____ _____in all things shall stand to and abide by and well and truly observe, do keep and perform all and singular the terms, covenants, conditions, guarantees and agreements in said contract, contained on his (their) part to be observed, done, kept and performed and each of them, at the time and in the manner and form and furnish all of the material and equipment specified in said contract in strict accordance with the terms of said contract which said plans, specifications and special provisions are included in and form a part of said contract and shall maintain the said work contemplated until its final completion and acceptance as specified in Subsection 109.11 of the approved specifications, and save harmless said Mississippi Transportation Commission from any loss or damage arising out of or occasioned by the negligence, wrongful or criminal act, overcharge, fraud, or any other loss or damage whatsoever, on the part of said principal (s), his (their) agents, servants, or employees in the performance of said work or in any manner connected therewith, and shall be liable and responsible in a civil action instituted by the State at the instance of the Mississippi Transportation Commission or any officer of the State authorized in such cases, for double any amount in money or property, the State may lose or be overcharged or otherwise defrauded of, by reason of wrongful or criminal act, if any, of the Contractor(s), his (their) agents or employees, and shall promptly pay the said agents, servants and employees and all persons furnishing labor, material, equipment or supplies therefor, including premiums incurred, for Surety Bonds, Liability Insurance, and Workmen's Compensation Insurance; with the additional obligation that such Contractor shall promptly make payment of all taxes, licenses, assessments, contributions, damages,

For Informational Purposes Only

any liquidated damages which may arise prior to any termination of said principal's contract, any liquidated damages which may arise after termination of the said principal's contract due to default on the part of said principal, penalties and interest thereon, when and as the same may be due this state, or any county, municipality, board, department, commission or political subdivision: in the course of the performance of said work and in accordance with Sections 31-5-51 et seq. Mississippi Code of 1972, and other State statutes applicable thereto, and shall carry out to the letter and to the satisfaction of the Executive Director of the Mississippi Department of Transportation, all, each and every one of the stipulations, obligations, conditions, covenants and agreements and terms of said contract in accordance with the terms thereof and all of the expense and cost and attorney's fee that may be incurred in the enforcement of the performance of said contract, or in the enforcement of the conditions and obligations of this bond, then this obligation shall be null and void, otherwise to be and remain in full force and virtue.

_____	_____
(Contractors) Principal	Surety
By _____	By _____
	(Signature) Attorney in Fact
	Address _____
	_____
Title _____	_____
(Contractor's Seal)	(Printed) MS Agent
	_____
	(Signature) MS Agent
	Address _____
	_____
	_____
	(Surety Seal)
	_____
	Mississippi Insurance ID Number

For Informational Purposes Only

Revised 9/02/2014

BID BOND

KNOW ALL MEN BY THESE PRESENTS, that we_____
Contractor

_____
Address

_____
City, State ZIP

As principal, hereinafter called the Principal, and _____
Surety

a corporation duly organized under the laws of the state of _____

as Surety, hereinafter called the Surety, are held and firmly bound unto **State of Mississippi, Jackson, Mississippi**

As Obligee, hereinafter called Obligee, in the sum of **Five Per Cent (5%) of Amount Bid**

Dollars($_____)

for the payment of which sum will and truly to be made, the said Principal and said Surety, bind ourselves, our heirs, executors, administrators, successors and assigns, jointly and severally, firmly by these presents.

WHEREAS, the Principal has submitted a bid for **Bridge Repair on I-55 over Hickahala Creek Bridge Nos. 266.8A & 266.8B, known as Federal Aid Project No. BR-0055-04(103) / 107214302 in Tate County.**

NOW THEREFORE, the condition of this obligation is such that if the aforesaid Principal shall be awarded the contract, the said Principal will, within the time required, enter into a formal contract and give a good and sufficient bond to secure the performance of the terms and conditions of the contract, then this obligation to be void; otherwise the Principal and Surety will pay unto the Obligee the difference in money between the amount of the bid of the said Principal and the amount for which the Obligee legally contracts with another party to perform the work if the latter amount be in excess of the former, but in no event shall liability hereunder exceed the penal sum hereof.

Signed and sealed this _____day of _____, 20___

_____
(Principal) (Seal)

_____ By:_____
(Witness) (Name) (Title)

_____
(Surety) (Seal)

_____ By:_____
(Witness) (Attorney-in-Fact)

_____
(MS Agent)

_____
Mississippi Insurance ID Number

OCR-485

REV. 1/2016

MISSISSIPPI DEPARTMENT OF TRANSPORTATION
OFFICE OF CIVIL RIGHTS
JACKSON, MISSISSIPPI

LIST OF FIRMS SUBMITTING QUOTES

I/we received quotes from the following firms on: Letting Date: **July 26, 2016**

Project No: **BR-0055-04(103)/ 107214302000**

County: **Tate**

Disadvantaged Business Enterprise (DBE) Regulations as stated in 49 CFR 26.11 require the Mississippi Department of Transportation (MDOT) to create and maintain a comprehensive list of all firms quoting/bidding subcontracts on prime contracts and quoting/bidding subcontracts on federally-funded transportation projects. For every firm, we require the following information:

Firm Name: _____
Contact Name/Title: _____
Firm Mailing Address: _____
Phone Number: _____
_____ DBE Firm _____ Non-DBE Firm

Firm Name: _____
Contact Name/Title: _____
Firm Mailing Address: _____
Phone Number: _____
_____ DBE Firm _____ Non-DBE Firm

Firm Name: _____
Contact Name/Title: _____
Firm Mailing Address: _____
Phone Number: _____
_____ DBE Firm _____ Non-DBE Firm

Firm Name: _____
Contact Name/Title: _____
Firm Mailing Address: _____
Phone Number: _____
_____ DBE Firm _____ Non-DBE Firm

Firm Name: _____
Contact Name/Title: _____
Firm Mailing Address: _____
Phone Number: _____
_____ DBE Firm _____ Non-DBE Firm

_____
SUBMITTED BY (Signature)

_____
FIRM NAME

For Informational Purposes Only

Rev. 6/98

MISSISSIPPI DEPARTMENT OF TRANSPORTATION
PILE AND DRIVING EQUIPMENT DATA FORM

Project No.: _____ Bridge No.: _____

Termini: _____ Pile Driving Contractor: _____

County: _____

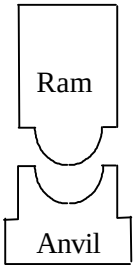

Hammer

Manufacture: _____ Model No.: _____

Hammer Type: _____ Serial No.: _____

Manufacturers Maximum Rated Energy: _____ (Kip-ft.)

Stroke at Maximum Rated Energy: _____ (ft.)

Range in Operating Energy: _____ to _____ (Kip-ft.)

Range in Operating Stroke: _____ to _____ (ft.)

Modifications: _____

_____

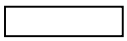

Striker Plate

Weight: _____ (N) Diameter: _____ (in.)

Thickness: _____ (mm)

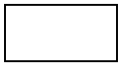

Hammer Cushion

Material #1	Material #2
Name: _____	Name: _____
Area: _____ (in.^{2})	Area: _____ (in.^{2})
Thickness/Plate: _____ (in.)	Thickness/Plate: _____ (in.)
No. of Plates: _____	No. of Plates: _____

Total Thickness of Hammer Cushion: _____ (in.)

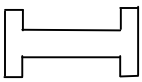

Helmet (Drive Head)

Weight: _____ (lbs.)

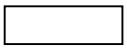

Pile Cushion

Material: _____

Area: _____ (in.^{2}) Total Thickness: _____ (in.)

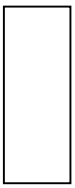

Pile

Submitted By: _____ ***Date:*** _____

Telephone No.: _____