| STATE | PROJECT NUMBER | SHEET NO. |
|---|---|---|
| MISSISSIPPI | ER–0246–00(015) | 1 |

## GENERAL INDEX


| INCLUDED THIS PROJECT | | BEGIN WITH SHEET |
|---|---|---|
| ☒ | ROADWAY | 1 |
| ☐ | PERMANENT SIGNS | 1001 |
| ☐ | TRAFFIC SIGNALS | 2001 |
| ☐ | ITS COMPONENTS | 3001 |
| ☐ | LIGHTING | 4001 |
| ☐ | (RESERVED) | 5001 |
| ☐ | ROADWAY STANDARD DWGS | 6001 |
| ☐ | BOX CULVERT STD. DRAWINGS (LRFD) | 7001 |
| ☐ | BOX CULVERT STD. DRAWINGS (STD. SPEC.) | 7501 |
| ☐ | BRIDGE | 8001 |
| ☐ | CROSS SECTIONS | 9001 |


**BRIDGE STRUCTURES REQ'D.**

**BOX BRIDGES REQ'D.**

**STATE OF MISSISSIPPI**

**MISSISSIPPI DEPARTMENT OF TRANSPORTATION**

# PLAN AND PROFILE OF PROPOSED STATE HIGHWAY FEDERAL AID PROJECT NO. ER–0246–00(015)

**SR 575 Between Progress and SR 48**

**Pike County**

FMS. CONST. NO. 107382/301000

**SCALES**

| | | |
|---|---|---|
| PLAN | | 1 IN. = 100 FT. |
| PROFILE | HOR. | 1 IN. = 100 FT. |
| | VERT. | 1 IN. = 10 FT. |
| LAYOUT | | 1 IN. = 1626 FT. |

**SITE 1 @ Sta. 73+23**

**SITE 2 @ Sta. 92+62**

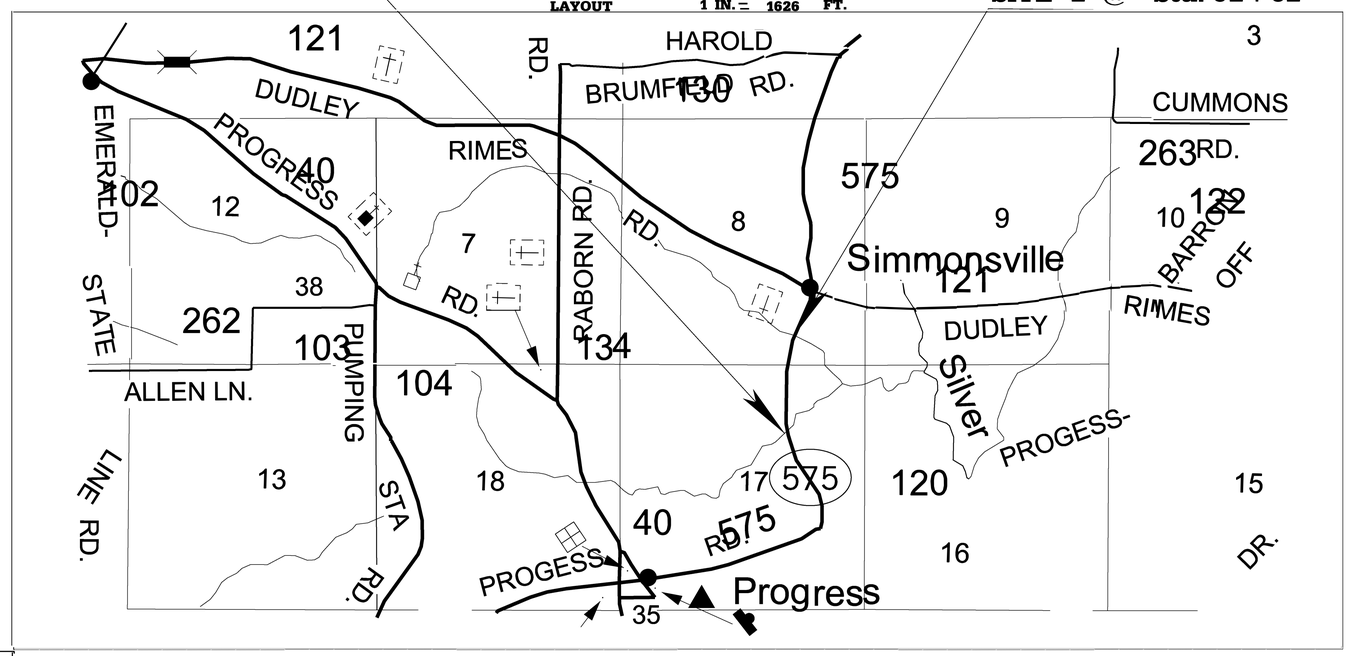


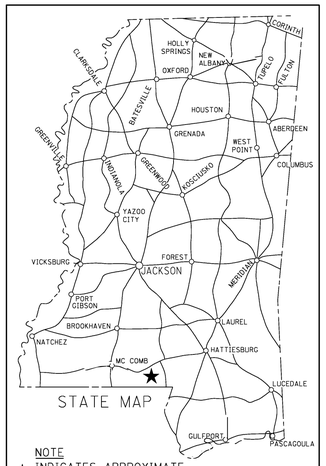


NOTE
★ INDICATES APPROXIMATE LOCATION OF PROJECT.

LAT. 31° 03' 20.61" LONG. 90° 18' 52.00"
(APPROX. MIDDLE OF PROJECT)

**DESIGN CONTROL**

_____ MPH = V (SPEED DESIGN)

ADT (____) = _____ : ADT (____) = _____

DHV = _____ : D = _____% T = _____%

**PERMITS ACQUIRED BY MDOT**

WETLANDS AND WATERS PERMITS (NECESSARY FOR ULTIMATE IMPROVEMENTS ONLY):

| | WATERS | WETLANDS |
|---|---|---|
| NATIONWIDE #14 | N | N |
| NATIONWIDE (OTHER)* | N | N |
| GENERAL* | N | N |
| INDIVIDUAL (404)* | N | N |

* ACQUISITION OF PERMITS FOR TEMPORARY IMPACTS DURING CONSTRUCTION ARE THE RESPONSIBILITY OF THE CONTRACTOR

STORMWATER PERMIT [S]

| | |
|---|---|
| Y | REQUIRED, CNOI SUBMITTED BY MDOT (DISTURBED AREA = 5 ACRES) |
| S | REQUIRED, SCNOI TO BE SUBMITTED BY CONTRACTOR (1 TO 4.99 ACRES) |
| N | NO STORMWATER PERMIT REQUIRED (<1 ACRE) |

APPROVED BY: _____

**GPS CONTROL NOTES**

HORIZONTAL DATUM: NAD MS WEST ZONE (US SURVEY FEET)

| HORIZONTAL MONUMENT | NORTH | EAST |
|---|---|---|
| MIA1 | 546956.800 | 2253630.280 |
| M361 | 612067.540 | 2253047.990 |
| 98V91 | 587339.080 | 2360278.750 |

VERTICAL DATUM: NAVD 88 (12A) (US SURVEY FEET)

| VERTICAL MONUMENT | ELEVATION |
|---|---|
| M361 | 405.50 |
| 98V91 | 264.73 |

ALL AZIMUTHS AND DISTANCES ARE GRID VALUES, US SURVEY FEET

| CONVERSION VALUES | PROJECT AVERAGE |
|---|---|
| GROUND TO GRID (COMBINED) FACTOR | 0.999938098 |
| GRID TO GEODETIC AZIMUTH | (00°00'33.575") |

**EQUATIONS**

**EXCEPTIONS**

**LENGTH DATA**

| | | | |
|---|---|---|---|
| LENGTH OF ROADWAY | 865 FT. | .164 | MI. |
| LENGTH OF BRIDGES | 0 FT. | | MI. |
| LENGTH OF PROJECT (NET) | 865 FT. | .164 | MI. |
| LENGTH OF EXCEPTIONS | 0 FT. | | MI. |
| LENGTH OF PROJECT (GROSS) | 865 FT. | .164 | MI. |

P S & E DATE:

APPROVED:

DEPUTY EXECUTIVE DIRECTOR / CHIEF ENGINEER

EXECUTIVE DIRECTOR

| DATE | REVISIONS | BY |
|---|---|---|

MISSISSIPPI DEPARTMENT OF TRANSPORTATION

MDOT MISSISSIPPI DEPARTMENT OF TRANSPORTATION

TITLE ROADWAY DESIGN DIVISION
MISSISSIPPI DEPARTMENT OF TRANSPORTATION

8/16/2016 2:28:18 PM ILESHEET.DGN

| STATE | PROJECT NO. |
|---|---|
| MISS. | ER-0246-00(015) |

| DESCRIPTION OF SHEET | WKG. NO. | SH. NO. |
|---|---|---|
| TITLE SHEET (1) | | |
| DETAILED INDEX & GENERAL NOTES (2) | | 1 |
| DETAILED INDEX | | |
| GENERAL NOTES | DI-1 | 2 |
| | GN-1 | 3 |
| TYPICAL SECTION SHEETS (1) | TS-1 | 4 |
| TYPICAL SECTION - S.R. 575 NEW CONSTRUCTION & OVERLAY SECTION | | |
| QUANTITY SHEETS (6) | | |
| SUMMARY OF QUANTITIES | SQS-1 | 5 |
| SUMMARY OF QUANTITIES | SQS-2 | 6 |
| BOX CULVERT & TRAFFIC CONTROL ITEMS | EQ-1 | 7 |
| SUMMARY OF REMOVAL ITEMS | EQ-2 | 8 |
| ESTIMATED QUANTITIES - EARTHWORK | EQ-3 | 9 |
| ESTIMATED QUANTITIES FOR TRAFFIC CONTROL SIGNS | TCQ-1 | 10 |
| PLAN & PROFILE SHEETS (1) | | |
| STA. 65+00 TO STA. 95+00 - (S.R. . 575) | WK-3 | 11 |
| DETAIL OF CONSTRUCTION SIGNING | DCS-1 | 12 |
| EROSION CONTROL SHEETS | | |
| TYPICAL TEMPORARY EROSION/SEDIMENT CONTROL APPLICATIONS | ECD-1 | 13 |
| DETAILS OF SEDIMENT BARRIER APPLICATIONS | ECD-2 | 14 |
| DETAILS OF SILT FENCE INSTALLATION | ECD-3 | 15 |
| DITCH CHECK STRUCTURES, TYPICAL APPLICATIONS AND DETAILS | ECD-4 | 16 |
| TEMPORARY EROSION, SEDIMENT AND WATER POLLUTION CONTROL MEASURES | ECD-5 | 17 |
| DETAILS OF EROSION CONTROL WATTLE DITCH CHECK | ECD-6 | 18 |
| DETAILS OF EROSION CONTROL SILT DIKE DITCH CHECK | ECD-7 | 19 |
| ROCK DITCH CHECK | ECD-8 | 20 |
| ROCK DITCH CHECK WITH SUMP EXCAVATION | ECD-9 | 21 |
| ROCK FILTER DAM | ECD-10 | 22 |
| INLET PROTECTION TYPICAL APPLICATIONS AND DETAILS | ECD-11 | 23 |
| INLET PROTECTION DETAILS FOR COARSE AGGREGATE ON GRADES AND SAGS | ECD-12 | 24 |
| INLET PROTECTION DETAILS OF WATTLES | ECD-13 | 25 |
| INLET PROTECTION DETAILS OF MANUFACTURED INLET PROTECTION DEVICE | ECD-14 | 26 |
| INLET PROTECTION DETAILS OF SAND BAG | ECD-15 | 27 |
| STABILIZED CONSTRUCTION ENTRANCE | ECD-16 | 28 |
| TEMPORARY CULVERT STREAM CROSSING | ECD-17 | 29 |
| TEMPORARY STREAM DIVERSION | ECD-18 | 30 |
| TEMPORARY STREAM DIVERSION (BOX EXTENSIONS) | ECD-19 | 31 |
| FLOATING TURBIDITY CURTAIN | ECD-20 | 32 |
| DETAILS OF EROSION CONTROL SANDBAG DITCH CHECK | ECD-21 | 33 |
| SEDIMENT RETENTION BARRIER | ECD-22 | 34 |
| EROSION CONTROL PLAN | ECP-3 | 35 |
| SPECIAL DESIGN SHEETS | | |
| HIGHWAY SIGN AND BARRICADE DETAILS FOR CONSTRUCTION PROJECTS | SDTCP-10 | 36 |
| PROPOSED FENCING PHASES | PFP-1 | 37 |
| FENCE: BARBED WIRE OR WOVEN WIRE ON TEE POSTS. | BB-1 | 38 |
| VEGETATION SCHEDULE | VS-1 | 39 |
| STANDARD DRAWINGS | | |
| PAVEMENT MARKING DETAILS FOR 2-LANE AND 4 LANE DIVIDED HIGHWAYS | PM-1 | 6120 |
| EROSION CONTROL | EC-1 | 6140 |
| TRAFFIC CONTROL PLAN WITH FLAGGER | TCP-1 | 6250 |
| SHORT DURATION CLOSING OF TWO-LANE TWO-WAY HIGHWAYS | TCP-8 | 6257 |
| TRAFFIC CONTROL PLAN MOBILE OPERATIONS MULTILAN ROADS AND TWO-LANE ROADS | TCP-11 | 6160 |
| TEMPORARY STRIPING FOR TRAFFIC CONTROL 2 LANE 4-LANE DIVIDED HIGHWAYS | TCP-15 | 6264 |
| TYPICAL GRADING TRANSITION BETWEEN CUTS AND FILLS | GT-1 | 6272 |
| SUPERELEVATION TRANSITION CASE I ROTATION ABOUT CENTERLINE | SE-2B | 6277 |
| MISCELLANEOUS DETAIL SHEET | MDS-1 | 6290 |
| TEMPORARY EROSION CONTROL MEASURES | TEC-1 | 6142 |
| FENCE: TYPICAL INSTALLATION AT DITCH CROSSINGS AND FENCE ENDINGS | FI-3 | 6166 |

| DESCRIPTION OF SHEET | WKG. NO. | SH. NO. |
|---|---|---|
| STANDARD DRAWINGS - BRIDGE SHEETS | | |
| BASIC CULVERT DRAWING: COLLAR LOCATIONS NORMAL AND SKEWED CULVERTS | IBJL-1 | 7005 |
| BASIC BARREL DETAILS FOR DOUBLE CELL BOX CULVERT HEIGHT: 6 FT. SPANS 16-32 (1 OF 3) | IBD-6 | 7115 |
| BASIC BARREL DETAILS FOR DOUBLE CELL BOX CULVERT HEIGHT: 6 FT. SPANS 16-32 (2 OF 3) | IBD-6 | 7116 |
| BASIC BARREL DETAILS FOR DOUBLE CELL BOX CULVERT HEIGHT: 6 FT. SPANS 16-32 (3 OF 3) | IBD-6 | 7117 |
| WINGS WITH 2:1 SLOPE FOR BASIC CULVERT DRAWING | | |
| BASIC BARREL DETAILS FOR DOUBLE CELL BOX CULVERT HEIGHT: 8FT SPANS 16-32 FT. (1 OF 3) | IBD-8 | 7118 |
| BASIC BARREL DETAILS FOR DOUBLE CELL BOX CULVERT HEIGHT: 8FT SPANS 16-32 FT. (2 OF 3) | IBD-8 | 7119 |
| BASIC BARREL DETAILS FOR DOUBLE CELL BOX CULVERT HEIGHT: 8FT SPANS 16-32 FT. (3 OF 3) | IBD-8 | 7120 |
| DOUBLE CELL 0° SKEW DETAILS | IWD-2W | 7127 |
| WINGS WITH 2:1 SLOPE FOR BASIC CULVERT DRAWING 0° SKEW DETAILS (1 OF 2) | IWD-6-2W | 7128 |
| WINGS WITH 2:1 SLOPE FOR BASIC CULVERT DRAWING 0° SKEW DETAILS (2 OF 2) | IWD-6-2W | 7129 |
| BASIC CULVERT DRAWING: COLLAR LOCATIONS NORMAL AND SKEWED CULVERTS | | |
| WINGS WITH 2:1 SLOPE FOR BASIC CULVERT DRAWING DOUBLE CELL 30° SKEW DETAILS (1 OF 2) | IWS-2W-30 | 7172 |
| WINGS WITH 2:1 SLOPE FOR BASIC CULVERT DRAWING DOUBLE CELL 30° SKEW DETAILS (2 OF 2) | IWS-2W-30 | 7173 |
| HEIGHT: 8 FT. SPANS 16-32 (1 OF 3) | IWD-8-2W-30 | 7176 |
| BASIC BARREL DETAILS FOR DOUBLE CELL BOX CULVERT HEIGHT: 8 FT. SPANS 16-32 (2 OF 3) | IWD-8-2W30 | 7177 |
| BASIC BARREL DETAILS FOR DOUBLE CELL BOX CULVERT HEIGHT: 8 FT. SPANS 16-32 (3 OF 3) | IWD-8-2W-30 | 7178 |
| CROSS SECTIONS (4) | | |
| STA. 70+00.000 TO STA. 76+00.000 (S.R. 575) | | |
| STA. 90+00.000 TO STA. 95+00.000 (S.R. 575) | | |

BARNES

| PS & E PLANS-DATE (08/12/2016) | | |
|---|---|---|
| FMS CON. # 107382/301000 | | |
| REVISIONS | | |
| DATE | SHEET NO. | BY |
| | | |
| | | |
| | | |
| | | |
| | | |

MISSISSIPPI DEPARTMENT OF TRANSPORTATION

**DETAIL INDEX**

PIKE COUNTY

PROJECT NO.: ER-0246-00(015)

WORKING NUMBER DI-1

SHEET NUMBER 2

FILENAME: (02)DETAILINDEX.DGN

DESIGN TEAM ROBERTS CHECKED DATE

12/20/11 DATE REVISION BY

PLAN ROADWAY DESIGN DIVISION MISSISSIPPI DEPARTMENT OF TRANSPORTATION

8/16/2016 2:28:18 PM (02)DETAILINDEX.DGN

| STATE | PROJECT NO. |
|---|---|
| MISS. | ER–0246–00(015) |

# GENERAL NOTES

1. FOR LIST OF PUBLIC UTILITIES SEE WK–3

2. THE LOCATION AND SPACING OF SIGNS, SHOWN ON THE TRAFFIC CONTROL PLANS, ARE APPROXIMATE AND MAY BE ADJUSTED AS NECESSARY TO FIT FIELD CONDITIONS.

3. IT SHALL BE THE RESPONSIBILITY OF THE CONTRACTOR TO PROTECT EXISTING STRUCTURES SUCH AS PIPES, INLETS, APRONS, BRIDGES, ETC. FROM DAMAGE WHICH MIGHT OCCUR DURING CONSTRUCTION. EXTREME CARE SHOULD BE EXERCISED IN UNDERCUT AREAS AND UNDERCUT DEPTH MAY BE ADJUSTED AT CROSS DRAINS, AS DIRECTED BY THE ENGINEER. THE CONTRACTOR SHALL REPLACE OR REPAIR, AS DIRECTED BY THE ENGINEER, ANY STRUCTURES DAMAGED DURING THE LIFE OF THE CONTRACT. NO PAYMENT WILL BE MADE FOR REPLACEMENT OR REPAIR OF DAMAGED STRUCTURES.

4. SEPERATE PAYMENT FOR THE DISPOSAL OF ALL EXISTING RIP RAP AND MISC. MATERIALS AT THE ENDS OF BOX CULVERTS & BOX BRIDGES WILL NOT BE MADE. THESE MATERIALS SHALL BE INCLUDED IN PAY ITEM 201–A CLEARING & GRUBBING (LUMP SUM).

5. EXISTING UNDERGROUND UTILITY LINES ARE SHOWN ON THE DRAWINGS BASED UPON THE BEST INFORMATION AVAILABLE TO THE ENGINEER. THE ENGINEER CAN NOT AND DOES NOT WARRANT THAT THIS INFORMATION IS COMPLETE OR ACCURATE. THE CONTRACTOR MUST COORDINATE DIRECTLY WITH THE INVOLVED UTILITY OWNERS TO GET UNDERGROUND UTILITY LINES FIELD LOCATED IN ADVANCE OF CONSTRUCTION.

6. ALL TRAFFIC CONTROL DEVICES ON THIS PROJECT SHALL COMPLY WITH PART VI OF THE MUTCD (LATEST EDITION)

7. ALL POST LENGTHS FOR SIGNS SHALL BE VERIFIED I THE FIELD PRIOR TO FABRICATION.

8. SMALL AMOUNTS OF EXCAVATION MAY BE NECESSARY AT SOME OF THE SITES. THIS MATERIAL MAY BE USED AS E.S.F.E. MATERIAL AND WILL BE PAID FOR AS BORROW. NO E.S.F.E. MATERIAL SHALL BE REMOVED FROM THE PROJECT WITHOUT THE APPROVAL OF THE ENGINEER.

9. WIRE FENCE BACKING WILL BE REQUIRED FOR ALL SILT FENCE. (SEE WK. NO. ECD–3)

10. FLUORESCENT ORANGE SHEETING SHALL BE USED ON ALL CONSTRUCTION AND TRAFFIC CONTROL SIGNS EXCEPT FOR THOSE DESIGNATED IN PLANS TO BE BLACK LEGEND AND BORDER ON WHITE BACKGROUND.

11. 25% SHRINKAGE FACTOR USED IN EARTHWORK CALCULATIONS IS FOR DESIGN ESTIMATING PURPOSES ONLY.

12. WORK ON STRUCTURES FOR THIS PROJECT REQUIRES EXCAVATION IN THE IMMEDIATE VICINITY OF TRAFFIC AND ADJACENT PROPERTIES. THEREFORE, THE RISK OF FAILURE OCCURING DURING EXCAVATION REQUIRES THAT EXTREME CAUTION BE EXERCISED. IT SHALL BE THE CONTRACTOR'S RESPONSIBILITY TO PLACE WHAT BRACING, SHORING, OR GROUND SUPPORT SYSTEM THAT IS DEEMED NECCESSARY TO PREVENT A FAILURE AND PROTECT

13. VEGETATIVE MATERIAL WILL BE REMOVED PRIOR TO PLACEMENT OF GRANULAR MATERIALS BY LIGHTLY BLADING OR CLOSELY MOWING. COST TO BE ABSORBED IN OTHER ITEMS.

14. REMOVAL OF RAISED PAVEMENT MARKERS IS NOT CONSIDERED A SEPERATE PAY ITEM.

12. THE EROSION CONTROL DEVICES REFERENCED IN THESE PLANS ARE A MINIMUM REQUIREMENT. IT IS THE RESPONSIBILITY OF THE CONTRACTOR TO INSURE THAT SILT DOES NOT LEAVE THE RIGHT OF WAY OR CONTAMINATE WATERS OF THE U. S. DURING CONSTRUCTION. THE CONTRACTOR SHALL SUBMIT AN EROSION CONTROL PLAN PRIOR TO COMMENCEMENT OF WORK AND MAINTAIN THE PLAN DURING CONSTRUCTION.

13. WORK WILL BE DONE @ STA. 73 + 23 (SITE 1) FIRST TO ALLOW ACCESS FOR LANDOWNERS, ONCE ACCESS CAN BE OPEN TO PUBLIC, THEN WORK CAN START @ STA. 92 + 62 (SITE 2)

14. ROADWAY SIGNS THAT ARE IN CONFLICT WITH CONSTRUCTION OF THIS PROJECT SHALL BE REMOVED AND RELOCATED BY THE CONTRACTOR AS DIRECTED BY THE ENGINEER, THE COST OF WHICH SHALL BE ABSORBED IN OTHER BID ITEMS.

15. WHERE MILLING IS REQUIRED, THE CONTRACTOR SHALL PROVIDE OUTLETS IN THE ESISTING SHOULDERS AT SUFFICIENT INTERVALS TO PREVENT POOLING OR STANDING WATER ON THE MILLED SURFACE, THE COST OF WHICH SHALL BE ABSORBED IN OTHER ITEMS BID.

| DATE | REVISION | BY |
|---|---|---|
| | | |

MISSISSIPPI DEPARTMENT OF TRANSPORTATION

GENERAL NOTES

PROJECT NO.: ER–0246–00(015)
PIKE COUNTY

FILENAME: gnotes.dgn
DESIGN TEAM REINIKE CHECKED DATE

WORKING NUMBER GN-1
SHEET NUMBER 3

| STATE | PROJECT NO. |
|---|---|
| MISS. | ER-0246-00(015) |

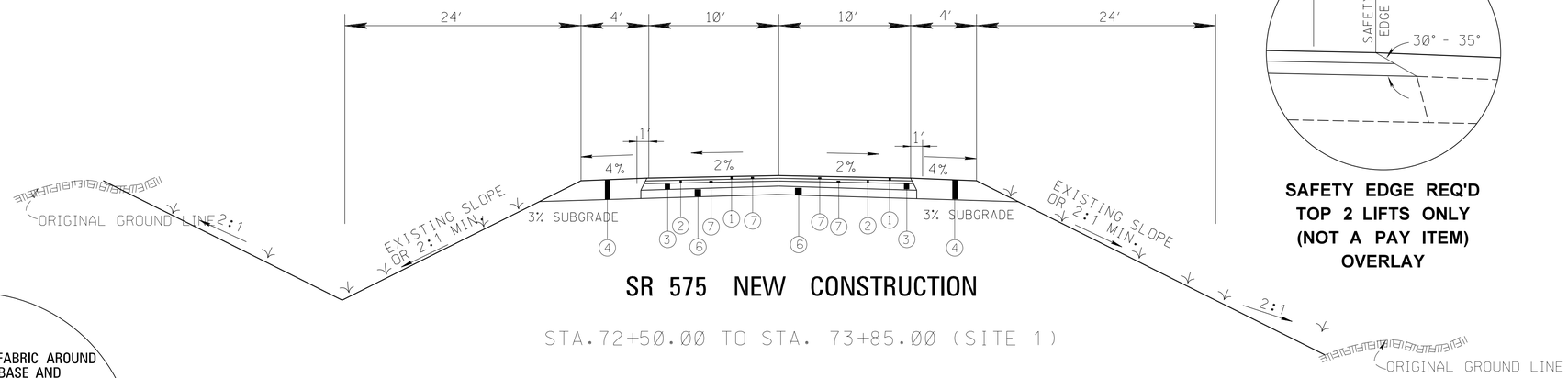


## SR 575 NEW CONSTRUCTION

STA.72+50.00 TO STA. 73+85.00 (SITE 1)

STA. 92+00.00 TO STA. 93+30.00 (SITE 2)

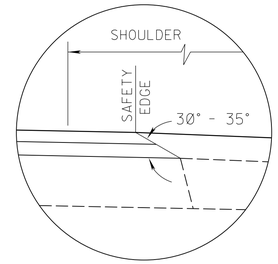


**SAFETY EDGE REQ'D TOP 2 LIFTS ONLY (NOT A PAY ITEM) OVERLAY**

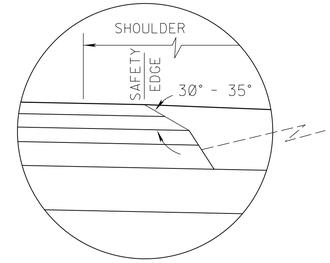


**SAFETY EDGE REQ'D TOP 2 LIFTS ONLY (NOT A PAY ITEM) NEW CONSTRUCTION**

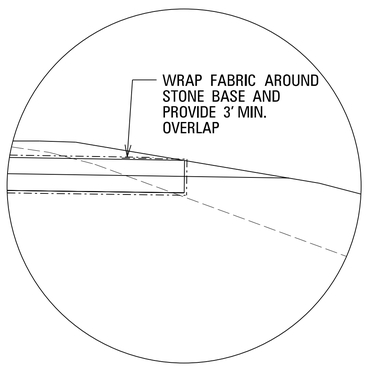


1. 1.50" ASPHALT. ST (1 @ 1 ½") (9.5mm MIXTURE) REQ'D.
2. 2.00" ASPHALT. ST (12.5mm MIXTURE) (1 @ 2") REQ'D.
3. 4.50" ASPHALT. ST. (19mm MIXTURE) (2@2.25") REQ'D.
4. 14.00" & VARIABLE GRANULAR SHOULDER MATERIAL (CLASS 6, GROUP C) REQ'D
5. 1.50" & VARIABLE DEPTH GRANULAR MATERIAL (CLASS 6, GROUP C) REQ'D.
6. 6.00" CRUSHED STONE W/GEOTEXTILE FABRIC TYPE V (NON-WOVEN) REQ'D.
7. TACK COAT (REQ'D)
8. MILLING (REQ'D)

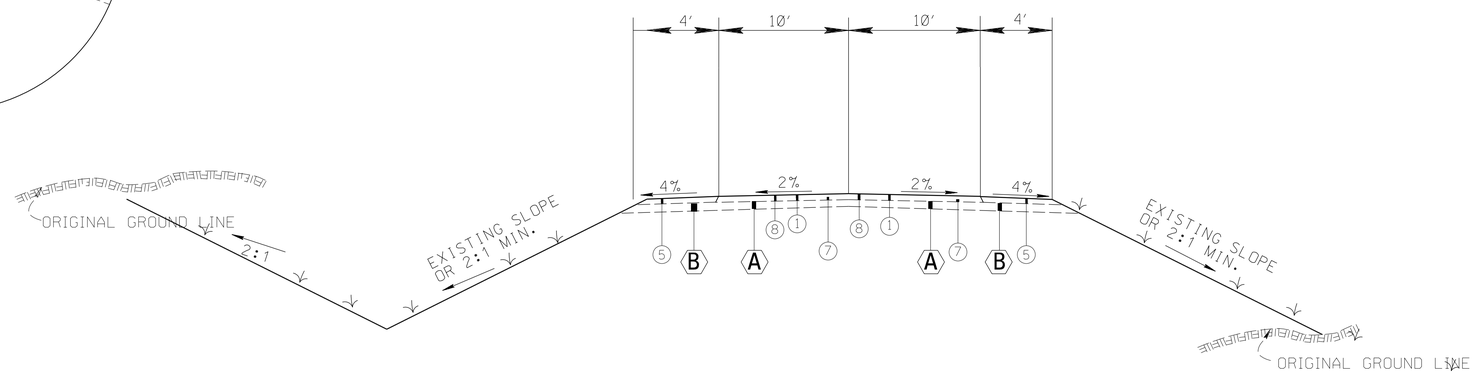


## SR 575 (OVERLAY SECTION)

STA. 71+00.00 TO STA. 72+50.00 (SITE 1)
STA. 73+85.00 TO STA. 75+35.00 (SITE 1)
STA. 90+50.00 TO STA. 92+00.00 (SITE 2)
STA. 93+30.00 TO STA. 94+80.00 (SITE 2)

A. EXISTING ASPHALT PAVEMENT (3" & VARIABLE)

B. EXISTING GRANULAR MATERIAL (VARIABLE DEPTH)

| | | | | | |
|---|---|---|---|---|---|
| | | | | BY | MISSISSIPPI DEPARTMENT OF TRANSPORTATION |
| | | | | REVISION | **TYPICAL SECTIONS** |
| | | | | | COUNTY: PIKE<br>PROJ. NO.: ER-0246-00(015) |
| | | | | DATE | FILENAME: RWD.CEL<br>DESIGN TEAM_____ CHECKED_____ DATE_____ |

WORKING NUMBER: TS-1

SHEET NUMBER: 4

PLAN
ROADWAY DESIGN DIVISION
MISSISSIPPI DEPARTMENT OF TRANSPORTATION

8/16/2016 2:28:24 PM 04)TS-1.DGN

| STATE | PROJECT NO. |
|---|---|
| MISS. | ER-0246-00(015) |

# SUMMARY OF QUANTITIES (SHEET 1)

| PAY ITEM NO. | PAY ITEM | UNIT | PRELIMINARY | FINAL |
|---|---|---|---|---|
| 201-B001 | CLEARING AND GRUBBING | ACRE | 1 | |
| 202-B064 | REMOVAL OF PIPE, 8" AND ABOVE | LF | 280 | |
| 202-B005 | REMOVAL OF ASPHALT PAVEMENT, ALL DEPTHS | SY | 909 | |
| 202-B041 | REMOVAL OF FENCE, ALL TYPES | LF | 520 | |
| 203-EX040 | BORROW EXCAVATION, AH, LVM, CLASS B9-6 | CY | 739 | |
| 206-A001 | STRUCTURE EXCAVATION | CY | 1,706 | |
| 206-B001 | SELECT MATERIAL FOR UNDERCUTS, CONTRACTOR FURNISHED, FM | CY | 186 | |
| 209-A004 | GEOTEXTILE STABILIZATION, TYPE V, NON-WOVEN | SY | 6,247 | |
| 907-225-B001 | AGRICULTURAL LIMESTONE | TON | 5 | |
| 213-C001 | SUPERPHOSPHATE | TON | 2 | |
| 907-225-A001 | GRASSING | ACRE | 2 | |
| 907-225-C001 | MULCH, VEGETATIVE MULCH | TON | 4 | |
| 907-226-A001 | TEMPORARY GRASSING | ACRE | 2 | |
| 234-A001 | TEMPORARY SILT FENCE | LF | 2,128 | |
| 907-237-A003 | WATTLES, 20" | LF | 440 | |
| 907-246-B002 | ROCKBAGS | EA | 540 | |
| 907-304-A004 | GRANULAR MATERIAL, LVM, CLASS 6, GROUP C | CY | 200 | |
| | ** ALTERNATE ITEMS ** | | | |
| 907-304-H002 | 3/4" AND DOWN CRUSHED STONE BASE, LVM | CY | 722 | |
| 907-304-H003 | SIZE 610 CRUSHED STONE BASE, LVM | CY | 722 | |
| | OR | | | |
| 907-304-H004 | SIZE 825B CRUSHED STONE BASE, LVM | CY | 722 | |
| | OR | | | |
| 907-403-A017 | 9.5-MM, ST, ASPHALT PAVEMENT | TON | 171 | |
| 907-403-A018 | 12.5-MM, ST, ASPHALT PAVEMENT | TON | 65 | |
| 907-403-A019 | 19-MM, ST, ASPHALT PAVEMENT | TON | 146 | |
| 907-406-A001 | COLD MILLING OF BITUMINOUS PAVEMENT, ALL DEPTHS | SY | 1,333 | |
| 907-407-A001 | ASPHALT FOR TACK COAT | GAL | 144 | |
| 907-601-A001 | CLASS "B" STRUCTURAL CONCRETE | CY | 344 | |
| 602-A001 | REINFORCING STEEL | LBS | 66,117 | |
| 607-D004 | BARBED WIRE FENCE, 5 STRANDS, GALVANIZED STEEL | LF | 1,120 | |
| 607-P1014 | LINE POST, 9' TEE POST STEEL | EA | 95 | |
| 607-P2002 | BRACE POST, 10' X 6" TIMBER | EA | 32 | |
| 607-P2003 | BRACE POST, 12' X 6" TIMBER | EA | 32 | |
| 607-Z001 | CONCRETE ANCHORS | EA | 32 | |
| 607-P1023 | LINE POST, 16' X 2 1/2" GALVANIZED STEEL | EA | 18 | |

REVISION | BY | DATE

MISSISSIPPI DEPARTMENT OF TRANSPORTATION

## SUMMARY OF QUANTITIES

COUNTY: PIKE

PROJ. NUM.: ER-0246-00(015)

FILENAME: (05)SQS_SH.DGN

DESIGN TEAM _____ CHECKED _____ DATE _____

WORKING NUMBER SQS-1

SHEET NUMBER 5

PLAN
ROADWAY DESIGN DIVISION
MISSISSIPPI DEPARTMENT OF TRANSPORTATION

8/16/2016 2:28:26 PM (05)SQS_SH.DGN

| STATE | PROJECT NO. |
|---|---|
| MISS. | ER-0246-00(015) |

# SUMMARY OF QUANTITIES (SHEET 2)

| PAY ITEM NO. | PAY ITEM | UNIT | PRELIMINARY | FINAL |
|---|---|---|---|---|
| 907-618-A001 | MAINTENANCE OF TRAFFIC | LS | 1 | |
| 619-D1001 | STANDARD ROADSIDE CONSTRUCTION SIGNS, LESS THAN 10 SQUARE FEET | SF | 149 | |
| 619-D2001 | STANDARD ROADSIDE CONSTRUCTION SIGNS, 10 SQUARE FEET OR MORE | SF | 210 | |
| 907-619-E3001 | CHANGEABLE MESSAGE SIGN | EA | 2 | |
| 619-G7001 | WARNING LIGHTS, TYPE "B" | EA | 25 | |
| 619-A2001 | TEMPORARY TRAFFIC STRIPE, CONTINUOUS YELLOW | LF | 1,295 | |
| 619-A1001 | TEMPORARY TRAFFIC STRIPE, CONTINUOUS WHITE | LF | 1,730 | |
| 619-A4001 | TEMPORARY TRAFFIC STRIPE, SKIP YELLOW | LF | 435 | |
| 619-G4005 | BARRICADES, TYPE III, DOUBLE FACED | LF | 270 | |
| 620-A001 | MOBILIZATION | LS | 1 | |
| 625-B001 | TRAFFIC STRIPE, SKIP YELLOW | LF | 435 | |
| 625-C001 | TRAFFIC STRIPE, CONTINUOUS WHITE | LF | 1,730 | |
| 625-D001 | TRAFFIC STRIPE, CONTINUOUS YELLOW | LF | 1,295 | |
| 627-L001 | TWO-WAY YELLOW REFLECTIVE HIGH PERFORMANCE RAISED MARKERS | EA | 20 | |
| 907-699-A002 | ROADWAY CONSTRUCTION STAKES | LS | 100% | |
| 815-A009 | LOOSE RIPRAP, SIZE 300 | TON | 824 | |
| 815-E001 | GEOTEXTILE UNDER RIPRAP | SY | 1,067 | |

MISSISSIPPI DEPARTMENT OF TRANSPORTATION

## SUMMARY OF QUANTITIES

COUNTY: PIKE

PROJ. NUM.: ER-0246-00(015)

FILENAME: (05)SQS_SH.DGN

DESIGN TEAM ____ CHECKED ____ DATE ____

WORKING NUMBER SQS-2

SHEET NUMBER 6

REVISION | BY | DATE

PLAN
ROADWAY DESIGN DIVISION
MISSISSIPPI DEPARTMENT OF TRANSPORTATION

8/16/2016 2:29:17 PM (05)SQS_SH.DGN

| STATE | PROJECT NO. |
|---|---|
| MISS. | ER-0246-00(015) |

# BOX CULVERTS REQUIRED

| WORK. NO. | STATION | SIZE | LENGTH | MAX. COVER | COVER OVER STRUCT. | MOD –IFIED | DRAWINGS REQUIRED STANDARD | DRAWINGS REQUIRED SPECIAL DESIGNED | WGWLS. | CLASS "B" CONCRETE | REINF. STEEL | EST. AVERAGE DEPTH | STRUC. EXCAV. | SELECT MATER. | REMARKS |
|---|---|---|---|---|---|---|---|---|---|---|---|---|---|---|---|
| 3 | STA. 73+23.00 | DBL 10'X8' | 50' | 5' | 4.59' LT 4.46' RT | | IBJL–1, IBD–8, IWS–2W–3, IWD–8–2W–30 | | 2 | 148.98 | 23,532.15 | | 853 | 86 | DBL 10' X 8' R.C.B.C. REQ'D. |
| | | | | | | | | | | | | | | | |
| 3 | STA. 92+62.00 | DBL 16'X6' | 45' | 5' | 3.90' LT 3.81' RT | | IBJL–1, IBD–6, IWD–2W, IWD–6–2W | | 2 | 194.79 | 42,585.164 | | 852 | 100 | DBL 16'X6' R.C.B.C. REQ'D. |
| UNITS | | | | | | | | | | CU. YD. | LB. | | CU. YD. | CU. YD. | |
| TOTAL | | | 95' | | | | | | 4 | 343.77 | 66,117.314 | | 1,706 | 186 | |

# SUMMARY OF TRAFFIC CONTROL ITEMS REQUIRED

| WORKING NUMBER | PHASE OF CONST. | PAVEMENT MARKING ITEMS TEMPORARY (PAINT) CONTINUOUS WHITE | TEMPORARY CONTINUOUS YELLOW | TEMPORARY SKIP YELLOW | TEMPORARY LEGEND SQ. FT. | TEMPORARY LEGEND LIN. FT. | TEMPORARY LEGEND EACH | PERMANENT (PAINT) CONTINUOUS WHITE | PERMANENT CONTINUOUS YELLOW | PERMANENT SKIP YELLOW | PERMANENT DETAIL YELLOW | PERMANENT DETAIL BLUE | PERMANENT LEGEND SQ. FT. | PERMANENT LEGEND LIN. FT. | PERMANENT LEGEND EACH | PAVEMENT MARKERS RED CLEAR | PAVEMENT MARKERS TWO–WAY YELLOW | BARRICADES TYPE III SINGLE FACE | BARRICADES TYPE III DOUBLE FACE | WARNING LIGHTS TYPE B | FREE STANDING PLASTIC DRUMS | MEDIAN BARRIER |
|---|---|---|---|---|---|---|---|---|---|---|---|---|---|---|---|---|---|---|---|---|---|---|
| | 1 | 1,730 | 1,295 | 435 | | | | 1,730 | 1,295 | 435 | | | | | | | 20 | | 258 | 14 | | |
| UNIT | | LIN. FT. | LIN. FT. | LIN. FT. | SQ. FT. | LIN. FT. | EACH | LIN. FT. | LIN. FT. | LIN. FT. | LIN. FT. | LIN. FT. | SQ. FT. | LIN. FT. | EACH | EACH | EACH | LIN. FT. | LIN. FT. | EACH | EACH | LIN. FT. |
| TOTAL | | 1,730 | 1,295 | 435 | | | | 1,730 | 1,295 | 435 | | | | | | | 20 | | 258 | 14 | | |

| WORKING NUMBER | TRAFFIC CONTROL SIGNS G20–1 | G20–2a | M1–5 | M2–1 | M6–4 | R1–1 | R2–1 | R4–7 | R11–2 | R11–3A | R11–4 | R16–3 | W1–4aL | W1–4aR | W1–6L | W1–6R | W1–9L | W1–9R | W3–1A | W3–5A | W8–9 | W9–2R | W13–1 | W20–1 | W20–3 | OM–3L | OM–3R | REMARKS |
|---|---|---|---|---|---|---|---|---|---|---|---|---|---|---|---|---|---|---|---|---|---|---|---|---|---|---|---|---|
| | | | | | | 18 | | | 16 | 4 | 2 | | | | | | | | | | | | | | | | | |
| UNIT | EACH | EACH | EACH | EACH | EACH | EACH | EACH | EACH | EACH | EACH | EACH | EACH | EACH | EACH | EACH | EACH | EACH | EACH | EACH | EACH | EACH | EACH | EACH | EACH | EACH | EACH | EACH | |
| TOTAL | | | | | | 18 | | | 16 | 4 | 2 | | | | | | | | | | | | | | | | | |

PLAN
ROADWAY DESIGN DIVISION
MISSISSIPPI DEPARTMENT OF TRANSPORTATION

8/16/2016 2:30:05 PM 06) EQUAN.DGN

MISSISSIPPI DEPARTMENT OF TRANSPORTATION

**ESTIMATED QUANTITIES**

**BOX CULVERT REQUIRED**

**TRAFFIC CONTROL ITEMS**

PIKE COUNTY
PROJECT NO.: ER-0246-00(015)

FILENAME: EQUAN.DGN
DESIGN TEAM ROBERTS CHECKED ____ DATE ____

REVISION | BY | DATE

WORKING NUMBER EQ-1
SHEET NUMBER 7

| STATE | PROJECT NO. |
|---|---|
| MISS. | ER-0246-00(015) |

# SUMMARY OF REMOVAL ITEMS

| WORKING NUMBER | STATION TO STATION | | 202–A AND 202–B PAY ITEMS | | | | | | | | | | | | | | | | |
|---|---|---|---|---|---|---|---|---|---|---|---|---|---|---|---|---|---|---|---|
| | | | OBSTRUCTION (BRIDGE) | BOX CULVERT | BOX CULVERT WINGWALL | PIPE (8" & ABOVE) | INLET | HEADWALL & 1 SECTION OF PIPE | ASPHALT PAVEMENT | CONCRETE PAVEMENT | CONC. PAVM'T. W/VAR. DEPTH OVERLAY | TRAFFIC STRIPE | CURB (ALL TYPES) | FENCE | GUARDRAIL | TYPE "H" BRIDGE END SECTION | TYPE "2" CABLE ANCHORAGE | GUARDRAIL DELINEATORS | REMARKS |
| 3 | | 73+07.00 | | | | 45' – 60" CMP | | | | | | | | | | | | | |
| 3 | | 73+25.00 | | | | 43' – 60" CMP | | | | | | | | | | | | | |
| ① 3 | | 73+40.00 | | | | 59' – 36" CPP | | | | | | | | | | | | | |
| | | | | | | | | | | | | | | | | | | | |
| ② 3 | | 92+52.00 | | | | 10' – 60" CMP | | | | | | | | | | | | | |
| 3 | | 92+62.00 | | | | 41' – 60" CMP | | | | | | | | | | | | | |
| 3 | | 92+71.00 | | | | 41' – 60" CMP | | | | | | | | | | | | | |
| 3 | | 92+80.00 | | | | 41' – 60" CMP | | | | | | | | | | | | | |
| | | | | | | | | | | | | | | | | | | | |
| | | | | | | | | | | | | | | | | | | | |
| | 91+65.00 | 93+60.00 | | | | | | | | | | | | 200' | | | | | |
| | 91+65.00 | 93+00.00 | | | | | | | | | | | | 320' | | | | | |
| UNIT | | | LUMP SUM | LIN. FT. | EACH | LIN. FT. | LIN. FT. | EACH | SQ. YD. | SQ. YD. | SQ. YD. | LIN. FT. | LIN. FT. | SQ. YD. | LIN. FT. | EACH | EACH | EACH | |
| TOTAL | | | | | | 280 | | | | | | | | 520' | | | | | |

① ** INSIDE OF THE ORIGINAL 60" CMP THERE IS A 36" CPP **

② ** PIPE AT STA. 92+52.00 HAS BLOWN OUT AND IS SILTED **

MISSISSIPPI DEPARTMENT OF TRANSPORTATION
**SUMMARY OF REMOVAL ITEMS**

COUNTY : PIKE COUNTY
PROJECT NO.: ER-0246-00(015)

WORKING NUMBER EQ-2

FILENAME: EQUAN.DGN
DESIGN TEAM ROBERTS CHECKED DATE

SHEET NUMBER 8

REVISION BY DATE

PLAN
ROADWAY DESIGN DIVISION
MISSISSIPPI DEPARTMENT OF TRANSPORTATION

8/16/2016 2:30:06 PM (06) EQUAN.DGN

| STATE | PROJECT NO. |
|---|---|
| MISS. | ER-0246-00(015) |

# EARTHWORK QUANTITIES

| WORKING NUMBER | STATION TO STATION | | PLAN & PROFILE | | E.S.F.E. | BORROW EXCAVATION | EXCESS EXCAVATION | REMARKS |
|---|---|---|---|---|---|---|---|---|
| | | | CUT | FILL | | | | |
| 3 | 73+07.00 | 73+40.00 | 0 | 363 | | 363 | | SITE 1 |
| | | | | | | | | |
| | | | | | | | | |
| | | | | | | | | |
| 3 | 92+52.00 | 92+80.00 | 0 | 376 | | 376 | | SITE 2 |
| | | | | | | | | |
| | | | | | | | | |
| | | | | | | | | |
| | | | | | | | | |
| | | | | | | | | |
| | | | | | | | | |
| | | | | | | | | |
| | | | | | | | | |
| | | | | | | | | |
| | | | | | | | | |
| UNIT | | | CU. YD | CU. YD | CU. YD | CU. YD | CU. YD | |
| TOTAL | | | 0 | 739 | | 739 | | |

**MAINLINE QUANTITIES (SITE 1)**

TOTAL CUT = 0

TOTAL FILL = 363

**EARTHWORK TOTALS (SITE 1)**

BORROW = 363

**MAINLINE QUANTITIES (SITE 2)**

TOTAL CUT = 0

TOTAL FILL = 376

**EARTHWORK TOTALS (SITE 2)**

BORROW = 376

MISSISSIPPI DEPARTMENT OF TRANSPORTATION

**SUMMARY OF**

**DRAINAGE ITEMS &**

**TRAFFIC CONTROL ITEMS**

PIKE COUNTY

PROJECT NO.: ER-0246-00(015)

FILENAME: EQUAN.DGN

DESIGN TEAM ROBERTS CHECKED DATE

DATE 12/XX/11 REVISION BY

WORKING NUMBER EQ-3

SHEET NUMBER 9

PLAN
ROADWAY DESIGN DIVISION
MISSISSIPPI DEPARTMENT OF TRANSPORTATION

8/16/2016 2:30:06 PM 06:EQUAN.DGN

| STATE | PROJECT NO. |
|---|---|
| MISS. | ER-0246-009(015) |

## SIGNS REQUIRED

| | SIGN NO. | SIZE | UNIT AREA SQ.FT. | QUAN. REQ'D. | TOTAL SIGN AREA SQ.FT. | REMARKS |
|---|---|---|---|---|---|---|
| | G20 - 1 | 60" X 24" | 10.00 ♦ | | | ROAD WORK NEXT X X MILES |
| | G20 - 2a | 48" X 24" | 8.00 | | | END ROAD WORK |
| | G20 - 4 | 36" X 18" | 4.50 | | | PILOT CAR FOLLOW ME |
| | | | | | | |
| 1 | M1 - 1 | 24" X 24" | 4.00 | | | 1 OR 2 DIGIT |
| 1 | M1 - 1 | 30" X 24" | 5.00 | | | 3 DIGIT |
| 2 | M1 - 4 | 24" X 24" | 4.00 | | | 1 OR 2 DIGIT |
| 2 | M1 - 4 | 30" X 24" | 5.00 | | | 3 DIGIT |
| | | | | | | |
| 3 | M1 - 5 | 24" X 24" | 4.00 | | | 1 OR 2 DIGIT |
| 3 | M1 - 5 | 30" X 24" | 5.00 | | | 3 DIGIT |
| | | | | | | |
| 4 | M3 - 1 | 24" X 12" | 2.00 | | | NORTH- 1 OR 2 DIGIT RTE. MARKER |
| 4 | M3 - 1 | 30" X 15" | 3.13 | | | NORTH- 3 DIGIT RTE. MARKER |
| 4 | M3 - 2 | 24" X 12" | 2.00 | | | EAST- 1 OR 2 DIGIT RTE. MARKER |
| 4 | M3 - 2 | 30" X 15" | 3.13 | | | EAST- 3 DIGIT RTE. MARKER |
| 4 | M3 - 3 | 24" X 12" | 2.00 | | | SOUTH- 1 OR 2 DIGIT RTE. MARKER |
| 4 | M3 - 3 | 30" X 15" | 3.13 | | | SOUTH- 3 DIGIT RTE. MARKER |
| 4 | M3 - 4 | 24" X 12" | 2.00 | | | WEST- 1 OR 2 DIGIT RTE. MARKER |
| 4 | M3 - 4 | 30" X 15" | 3.13 | | | WEST- 3 DIGIT RTE. MARKER |
| | | | | | | |
| | | | | | | |
| | M4 - 8 | 24" X 12" | 2.00 | | | DETOUR- 1 OR 2 DIGIT RTE. MARKER |
| | M4 - 8 | 30" X 15" | 3.13 | | | DETOUR- 3 DIGIT RTE. MARKER |
| | M4 - 9 | 48" X 36" | 12.00 ♦ | | | DETOUR ↑ |
| | M4 - 9L | 48" X 36" | 12.00 ♦ | | | DETOUR ← |
| | M4 - 9BL | 48" X 36" | 12.00 ♦ | | | DETOUR |
| | M4 - 9SL | 48" X 36" | 12.00 ♦ | | | DETOUR |
| | M4 - 9BSL | 48" X 36" | 12.00 ♦ | | | DETOUR |
| | M4 - 9R | 48" X 36" | 12.00 ♦ | | | DETOUR → |
| | M4 - 9BR | 48" X 36" | 12.00 ♦ | | | DETOUR |
| | M4 - 9SR | 48" X 36" | 12.00 ♦ | | | DETOUR |
| | M4 - 9BSR | 48" X 36" | 12.00 ♦ | | | DETOUR |
| | M4 - 10L | 48" X 18" | 6.00 | | | DETOUR |
| | M4 - 10R | 48" X 18" | 6.00 | | | DETOUR |
| | | | | | | |
| 4 | M4 - 5 | 24" X 12" | 2.00 | | | TO |
| 4 | M5 - 1L | 21" X 15" | 2.19 | | | |
| 4 | M5 - 1R | 21" X 15" | 2.19 | | | |
| 4 | M5 - 2L | 21" X 15" | 2.19 | | | |
| 4 | M5 - 2R | 21" X 15" | 2.19 | | | |
| 4 | M6 - 1L | 21" X 15" | 2.19 | | | |
| 4 | M6 - 1R | 21" X 15" | 2.19 | | | |
| 4 | M6 - 2L | 21" X 15" | 2.19 | | | |
| 4 | M6 - 2R | 21" X 15" | 2.19 | | | |
| 4 | M6 - 3 | 21" X 15" | 2.19 | | | |
| | | | | | | |
| | | | | | | |
| | R1 - 1 | 36" OCTAGON | 7.46 | 20 | 149.20 | STOP (1) |
| | R1 - 1 | 48" OCTAGON | 13.25 ♦ | | | STOP (2) |
| | R1 - 2 | 48" X 48" X 48" | 6.93 | | | YIELD (1) |
| | R1 - 2 | 60" X 60" X 60" | 10.83 ♦ | | | YIELD (2) |

## SIGNS REQUIRED (CONT'D)

| | SIGN NO. | SIZE | UNIT AREA SQ.FT. | QUAN. REQ'D. | TOTAL SIGN AREA SQ.FT. | REMARKS |
|---|---|---|---|---|---|---|
| | R1 - 3 | 18" X 9" | 1.13 | | | 3-WAY, 4 WAY ETC. (1) |
| | R1 - 3 | 24" X 12" | 2.00 | | | (2) |
| | R2 - 1 | 24" X 30" | 5.00 | | | SPEED LIMIT (1) |
| | R2 - 1 | 36" X 48" | 12.00 ♦ | | | (2) |
| 6 | R2 - 1 | 48" X 60" | 20.00 ♦ | | | |
| | R3 - 1 | 36" X 36" | 9.00 | | | (1) |
| | R3 - 1 | 48" X 48" | 16.00 ♦ | | | (2) |
| | R3 - 2 | 36" X 36" | 9.00 | | | (1) |
| | R3 - 2 | 48" X 48" | 16.00 ♦ | | | (2) |
| | R3 - 4 | 36" X 36" | 9.00 | | | (1) |
| | R3 - 4 | 48" X 48" | 16.00 ♦ | | | (2) |
| | R3 - 5L | 30" X 36" | 7.50 | | | ONLY |
| | R3 - 5R | 30" X 36" | 7.50 | | | ONLY |
| | R3 - 6L | 30" X 36" | 7.50 | | | |
| | R3 - 6R | 30" X 36" | 7.50 | | | |
| | R3 - 7L | 30" X 30" | 6.25 | | | LEFT LANE MUST TURN LEFT |
| | R3 - 7R | 30" X 30" | 6.25 | | | RIGHT LANE MUST TURN RIGHT |
| | R4 - 1 | 24" X 30" | 5.00 | | | DO NOT PASS (1) |
| | | 48" X 60" | 20.00 ♦ | | | (2) |
| | R4 - 2 | 24" X 30" | 5.00 | | | PASS WITH CARE (1) |
| | | 48" X 60" | 20.00 ♦ | | | (2) |
| | R4 - 7 | 48" X 60" | 20.00 ♦ | | | |
| | R4 - 8 | 48" X 60" | 20.00 ♦ | | | |
| | R5 - 1 | 48" X 48" | 16.00 ♦ | | | DO NOT ENTER |
| | R5 - 1a | 42" X 30" | 8.75 | | | WRONG WAY |
| | R6 - 1L | 36" X 12" | 3.00 | | | ONE WAY |
| | R6 - 1R | 36" X 12" | 3.00 | | | ONE WAY |
| | R6 - 2L | 24" X 30" | 5.00 | | | ONE WAY |
| | R6 - 2R | 24" X 30" | 5.00 | | | ONE WAY |
| | | | | | | |
| | R11 - 2 | 48" X 30" | 10.00 ♦ | 16 | 160.00 | ROAD CLOSED |
| | R11 - 3a | 60" X 30" | 12.50 ♦ | 2 | 25.00 | ROAD CLOSED XX MILES AHEAD |
| | R11 - 3b | 60" X 30" | 12.50 ♦ | | | BRIDGE OUT XX MILES AHEAD |
| | R11 - 4 | 60" X 30" | 12.50 ♦ | 2 | 25.00 | ROAD CLOSED TO THRU TRAFFIC |
| | | | | | | |
| | R12 - 1 | 36" X 48" | 12.00 ♦ | | | WEIGHT LIMIT XX TONS |
| | | | | | | |
| 7 | R16- 3 | 36" X 48" | 12.00 ♦ | | | WHEN WORKERS ARE PRESENT SPEEDING FINES DOUBLED |
| 6 7 | | 48" X 60" | 20.00 ♦ | | | |
| | | | | | | |
| | W1 - 1L | 48" X 48" | 16.00 ♦ | | | |
| | W1 - 1R | 48" X 48" | 16.00 ♦ | | | |
| | W1 - 2L | 48" X 48" | 16.00 ♦ | | | |
| | W1 - 2R | 48" X 48" | 16.00 ♦ | | | |
| | W1 - 3L | 48" X 48" | 16.00 ♦ | | | |
| | W1 - 3R | 48" X 48" | 16.00 ♦ | | | |
| | W1 - 4aL | 48" X 48" | 16.00 ♦ | | | |
| | W1 - 4aR | 48" X 48" | 16.00 ♦ | | | |
| | W1 - 5L | 48" X 48" | 16.00 ♦ | | | |
| | W1 - 5R | 48" X 48" | 16.00 ♦ | | | |
| | W1 - 6L | 48" X 24" | 8.00 | | | (1) |
| | W1 - 6L | 60" X 30" | 12.50 ♦ | | | (2) |
| | W1 - 6R | 48" X 24" | 8.00 | | | (1) |
| | W1 - 6R | 60" X 30" | 12.50 ♦ | | | (2) |
| | W1 - 7 | 48" X 24" | 8.00 | | | (1) |

## SIGNS REQUIRED (CONT'D)

| SIGN NO. | SIZE | UNIT AREA SQ.FT. | QUAN. REQ'D. | TOTAL SIGN AREA SQ.FT. | REMARKS |
|---|---|---|---|---|---|
| W1 - 7 | 60" X 30" | 12.50 ♦ | | | (2) |
| W1 - 8L | 18" X 24" | 3.00 | | | (1) |
| W1 - 8L | 36" X 48" | 12.00 ♦ | | | (2) |
| W1 - 8R | 18" X 24" | 3.00 | | | (1) |
| W1 - 8R | 36" X 48" | 12.00 ♦ | | | (2) |
| W1 - 9L | 48" X 48" | 16.00 ♦ | | | |
| W1 - 9R | 48" X 48" | 16.00 ♦ | | | |
| W3 - 1a | 48" X 48" | 16.00 ♦ | | | |
| | | | | | |
| W3 - 2a | 48" X 48" | 16.00 ♦ | | | |
| W3 - 3 | 48" X 48" | 16.00 ♦ | | | |
| W3 - 5 | 48" X 48" | 16.00 ♦ | | | SPEED REDUCTION |
| W4 - 1L | 48" X 48" | 16.00 ♦ | | | |
| W4 - 1R | 48" X 48" | 16.00 ♦ | | | |
| W4 - 2L | 48" X 48" | 16.00 ♦ | | | |
| W4 - 2R | 48" X 48" | 16.00 ♦ | | | |
| W5 - 1a | 48" X 48" | 16.00 ♦ | | | PAVEMENT NARROWS |
| W6 - 1 | 48" X 48" | 16.00 ♦ | | | |
| W6 - 2 | 48" X 48" | 16.00 ♦ | | | |
| W6 - 3 | 48" X 48" | 16.00 ♦ | | | |
| W8 - 1 | 48" X 48" | 16.00 ♦ | | | BUMP |
| W8 - 4 | 48" X 48" | 16.00 ♦ | | | SOFT SHOULDER |
| W8 - 6 | 48" X 48" | 16.00 ♦ | | | TRUCK CROSSING |
| W8 - 7 | 48" X 48" | 16.00 ♦ | | | LOOSE GRAVEL |
| W8 - 9 | 48" X 48" | 16.00 ♦ | | | LOW SHOULDER |
| W8 - 11 | 36" X 36" | 9.00 | | | UNEVEN LANES |
| W8 - 12 | 48" X 48" | 16.00 ♦ | | | NO CENTER STRIPE |
| W10 - 1 | 36" DIA. | 7.07 | | | (1) |
| W10 - 1 | 48" DIA. | 12.56 ♦ | | | (2) |
| W13 - 1 | 24" X 24" | 4.00 | | | XX MPH |
| W14 - 3 | 36"X48"X48" | 5.56 | | | NO PASSING ZONE (1) |
| | 48"X64"X64" | 9.89 | | | (2) |
| W16-2 | 24" X 18" | 3.00 | | | XXX FEET |
| W19 - 2 | 48" X 48" | 16.00 ♦ | | | BRIDGE MAY ICE IN COLD WEATHER |
| W20 - 1 | 48" X 48" | 16.00 ♦ | | | ADVANCE ROAD WORK (1) |
| W20 - 1 | 36" X 36" | 9.00 | | | (2) |
| W20 - 2 | 48" X 48" | 16.00 ♦ | | | ADVANCE DETOUR |
| W20 - 3 | 48" X 48" | 16.00 ♦ | | | ADVANCE ROAD CLOSED |
| | | | | | |
| W20 - 4 | 48" X 48" | 16.00 ♦ | | | ADVANCE ONE-LN. RD. |
| W20 - 4B | 48" X 48" | 16.00 ♦ | | | ADVANCE ONE-LN. BR. |
| W20 - 5L | 48" X 48" | 16.00 ♦ | | | ADVANCE LT. LN. CLOSED |
| W20 - 5R | 48" X 48" | 16.00 ♦ | | | ADVANCE RT. LN. CLOSED |
| | | | | | |
| | | | | | |
| W20 - 7a | 48" X 48" | 16.00 ♦ | | | |
| W21 - 1 | 36" X 36" | 9.00 | | | WORKERS |
| W21 - 1a | 36" X 36" | 9.00 | | | |

## SIGNS REQUIRED (CONT'D)

| | SIGN NO. | SIZE | UNIT AREA SQ.FT. | QUAN. REQ'D. | TOTAL SIGN AREA SQ.FT. | REMARKS |
|---|---|---|---|---|---|---|
| | W21 - 2 | 36" X 36" | 9.00 | | | FRESH OIL ( TAR ) |
| | W21 - 3 | 48" X 48" | 16.00 ♦ | | | ADVANCE ROAD MACHINERY |
| | | | | | | |
| | W21 - 5 | 48" X 48" | 16.00 ♦ | | | SHOULDER WORK |
| | W21 - 6 | 36" X 36" | 9.00 | | | SURVEY CREW |
| | | | | | | |
| | | | | | | |
| | | | | | | |
| | | | | | | |
| | VP - 1L | 12" X 36" | 3.00 | | | |
| | VP - 1R | 12" X 36" | 3.00 | | | |
| | | | | | | |
| 5 | OM - 3L | 12" X 36" | 3.00 | | | |
| 5 | OM - 3R | 12" X 36" | 3.00 | | | |
| | TOTAL SIGN AREA | | | LESS THAN 10 SQ. FT. | | 149.20 SQ. FT. |
| | | | | | | |
| | TOTAL SIGN AREA | | | 10 SQ. FT. OR MORE ♦ | | 210.00 SQ. FT. |

(1) STANDARD
(2) SPECIAL (USE WHERE WARRANTED)

## NOTES

1. INTERSTATE ROUTE MARKER
2. UNITED STATES ROUTE MARKER
3. STATE ROUTE MARKER
4. COLORS OF CARDINAL DIRECTION MARKERS AND DIRECTIONAL ARROWS SHALL BE APPROPRIATE TO MATCH ACCOMPANYING ROUTE MARKERS.
5. BLACK STRIPES ON YELLOW BACKGROUND
6. INTERSTATE USE ONLY
7. TOP OF SIGN - BLACK LETTERING ON ORANGE BACKGROUND, BOTTOM OF SIGN - BLACK LETTERING ON WHITE BACKGROUND

THE BACKGROUND OF ALL WARNING SIGNS ("W" SERIES) EXCEPT W10-1 SHALL BE ORANGE. THE W10-1 BACKGROUND SHALL BE YELLOW IN ALL CASES.

MISSISSIPPI DEPARTMENT OF TRANSPORTATION
**ESTIMATED QUANTITIES**
**FOR TRAFFIC CONTROL SIGNS**

PIKE COUNTY
PROJECT NO.: ER-0246-00(015)

FILENAME: EQUAN.DGN
DESIGN TEAM ROBERTS CHECKED DATE 09-13-10

DATE | REVISION | BY

WORKING NUMBER TCQ-1
SHEET NUMBER 10

PLAN
ROADWAY DESIGN DIVISION
MISSISSIPPI DEPARTMENT OF TRANSPORTATION

8/16/2016 2:30:07 PM 06) EQUAN.DGN

| STATE | PROJECT NO. |
|---|---|
| MISS. | ER-0246-00(015) |

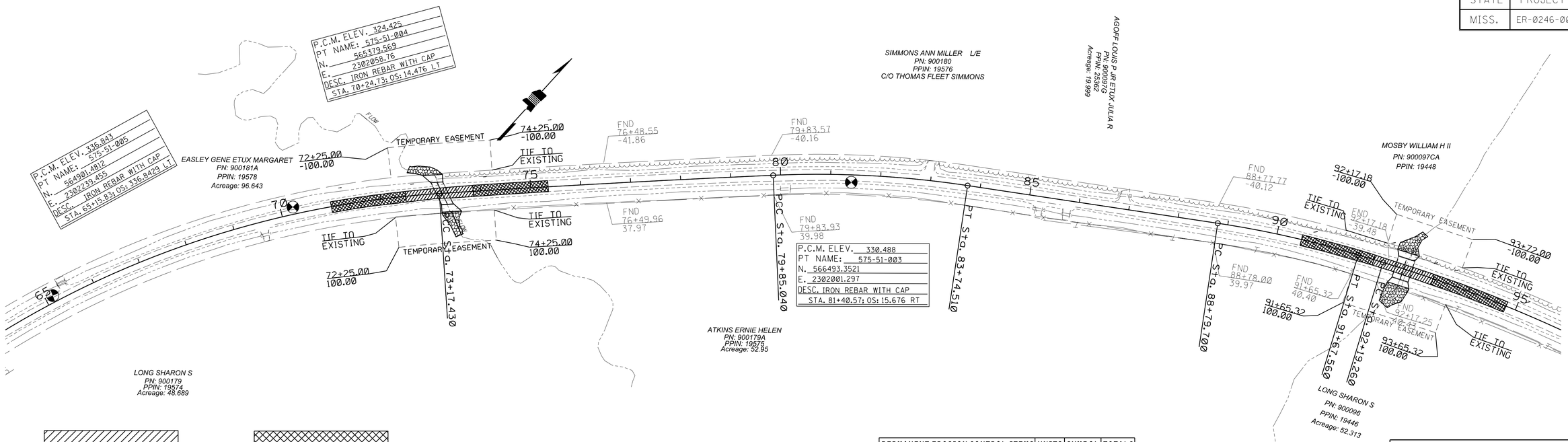


**REMOVAL OF ASPHALT PAVEMENT ALL DEPTHS (UNDER PAY ITEM 202–B)**

**1.50" MILLING REQ'D**

| PERMANENT EROSION CONTROL ITEMS | UNITS | SYMBOL | TOTALS |
|---|---|---|---|
| DITCH LINER | S.Y. | | |
| SOIL REINF. MATERIAL | S.Y. | | |
| PAVED DITCH | C.Y. | | |
| RIPRAP | TON | | 440 |
| GEOTEXTILE | S.Y. | | 549 |
| SOLID SOD | S.Y. | | |

| EARTHWORK TOTAL THIS SHEET | | |
|---|---|---|
| Cut | 1,565 | Cu.Yds |
| Fill | 68 | Cu.Yds |
| Excess | 2,440 | Cu.Yds |
| Surplus | | Cu.Yds |
| Borrow( ) | 1,390 | Cu.Yds |

**UTILITIES**

**AT&T**
**MARTY DAVIS**
**100 BRUNIE ST.**
**HATTIESBURG, MS 39401**
**(601) 833–7697**

**MAGNOLIA ELECTRIC**
**JAMES JACKSON**
**3012 HWY 98E**
**MCCOMB, MS 39648**
**(601) 684–4011**

**NOTE:**
**50' OF COLD MILLING ESTIMATED AT EACH END FOR TIE DOWN OF GRADES**

**STA. 73+23**
**50' – DBL 10'X8' R.C.B.B (REQ'D)**
**25' RT (REQ'D) 25' LT (REQ'D)**
**SKEW BOX 22° RT FWD**
**2 – 30° SKEWED 2:1 WINGWALLS REQ'D**
**2 – APRONS (REQ'D)**

**STA. 73+07 45' – 60" CMP (IN PLACE)(TO BE REMOVED)**
**STA. 73+25 43' – 60" CMP (IN PLACE)(TO BE REMOVED)**
**STA. 73+40 59' – 36" CPP (IN PLACE)(TO BE REMOVED)**
**INSIDE 60" CMP**

**STA. 92+52.00 – 10' 60" CMP (IN PLACE)(TO BE REMOVED)**
**STA. 92+62.00 – 41' 60" CMP (IN PLACE)(TO BE REMOVED)**
**STA. 92+71.00 – 41' 60" CMP (IN PLACE)(TO BE REMOVED)**
**STA. 92+80.00 – 41' 60" CMP (IN PLACE)(TP BE REMOVED)**

**STA. 92+62.000**
**45' – DBL 16'x6' R.C.B.C (REQ'D)**
**22' RT (REQ'D) 23' LT (REQ'D)**
**2 – 0° 2:1 WINGWALLS (REQ'D)**
**2 – APRONS (REQ'D)**

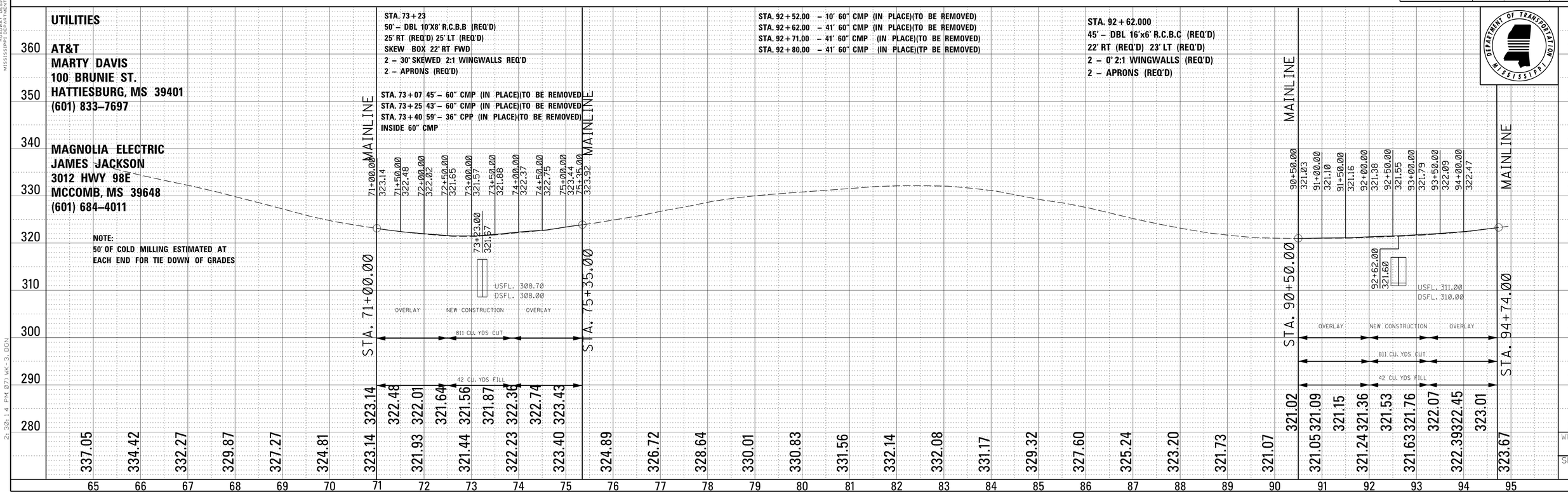




PLAN-PROFILE
ROADWAY DESIGN DIVISION
MISSISSIPPI DEPARTMENT OF TRANSPORTATION
21:30:14 PM 07/ WK-3.DGN

FMS CON: 107382/301000

| STATE | PROJECT NO. |
|---|---|
| MISS | ER-0246-00(015) |

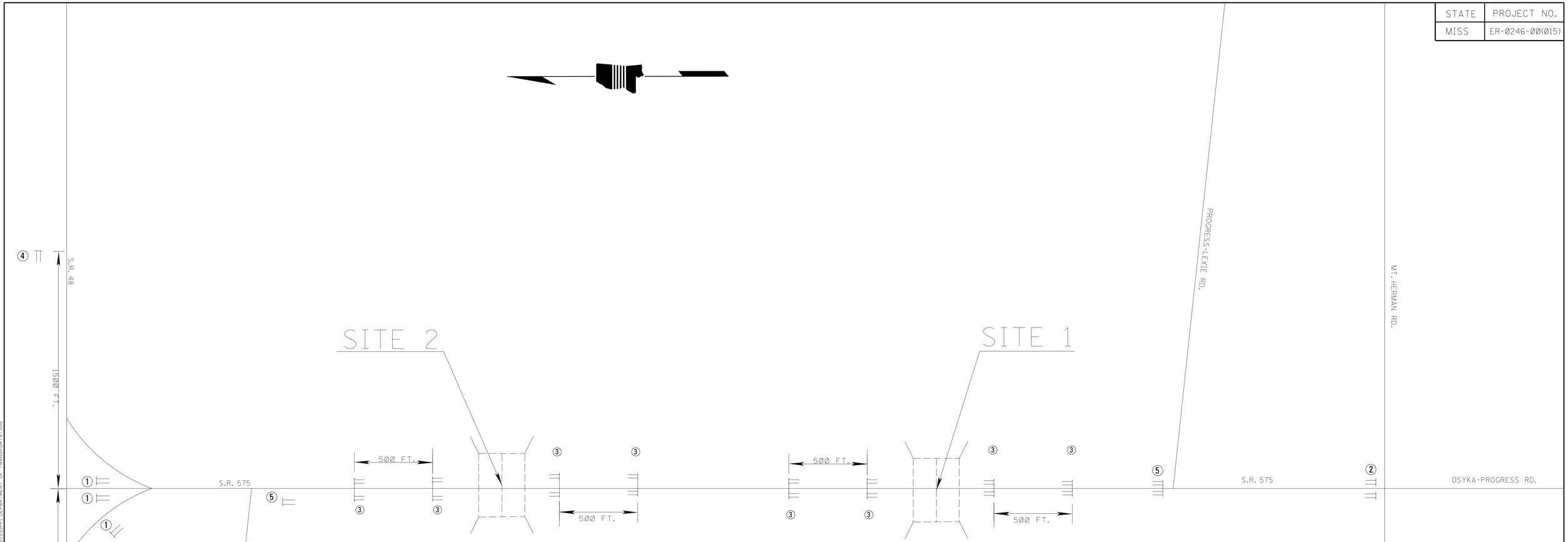


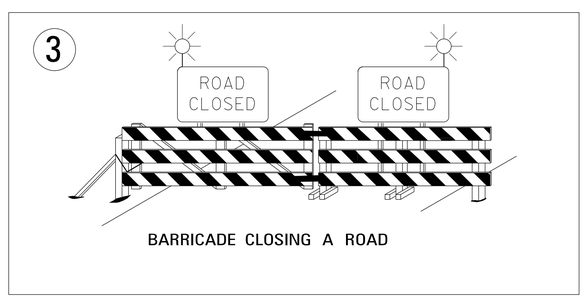


1 TYPE "B" WARNING LIGHTS
1 - R11-4 (60"X30")(3 MILES)
MOUNTED ON TYPE III BARRICADE
(6' WIDE)(DBL. FACED)

2 TYPE "B" WARNING LIGHTS
R11-3A (60"X30")
ROAD CLOSED
3/4 MILE AHEAD
MOUNTED ON TYPE III BARRICADE
(6' WIDE)(DBL. FACED)

3 TYPE "B" WARNING LIGHTS
2 - R11-2 (48"X30")
2 - R1-1 ( 36")
24' - TYPE III BARRICADE

4 MESSAGE SIGN

5 TYPE "B" WARNING LIGHTS
2 - R11-4 (60"X30")
2 - R1-1 (36")
24' - TYPE III BARRICADE

** NOT TO SCALE **

MISSISSIPPI DEPARTMENT OF TRANSPORTATION

**DETAIL OF CONSTRUCTION SIGNING**

COUNTY: PIKE
PROJ. NUM.: ER-0246-00(015)

WORKING NUMBER DCS-1

SHEET NUMBER 12

FILENAME: RWD.CEL
DESIGN TEAM ____ CHECKED ____ DATE ____

REVISION | BY | DATE

PLAN
ROADWAY DESIGN DIVISION
MISSISSIPPI DEPARTMENT OF TRANSPORTATION

8/16/2016 2:30:19 PM (08) DCS_1.DGN

| STATE | PROJECT NO. |
|---|---|
| MISS. | ER-0246-00(015) |

NOTES:

1. "J-HOOK" CONFIGURATION SILT FENCE APPLICATIONS ARE TO BE USED IN CONJUNCTION WITH PERIMETER SILT FENCE WHEN STORMWATER RUNOFF IS IN TWO DIRECTIONS (DOWN A FILL SLOPE AND DOWN GRADIENT ALONG THE RIGHT-OF-WAY).
2. "SMILE CONFIGURATION" APPLICATIONS ARE TO BE USED AS PERIMETER SILT FENCE WHEN THERE IS ONE-DIRECTIONAL FLOW DOWN A SLOPE.
3. SAND BAGS CAN BE USED AS DIVERSION BERMS TO PREVENT SEDIMENT FROM BEING WASHED ONTO OR ACROSS HARD SURFACES, OR TO HELP SLOW SHEET FLOW VELOCITY WHEN DRAINING AWAY FROM HARD SURFACES.
4. FOR SHORTER SLOPES AND/OR SLOPES THAT ARE LESS STEEP, DIVERSION BERMS CAN BE USED TO SAFELY CONVEY STORMWATER AWAY FROM OR AROUND A DENUDED AREA. THEY CAN BE CONSTRUCTED USING A MANUFACTURED SILT DIKE OR BY CONSTRUCTING A TEMPORARY EARTH BERM AND TRENCH WITH GEOTEXTILE OR POLYETHYLENE SHEETING PROTECTION.
5. TEMPORARY DEWATERING STRUCTURES CAN BE USED DURING CULVERT CONSTRUCTION. STREAM DIVERSIONS, OR OTHER CONSTRUCTION ACTIVITIES WHERE TURBID WATERS NEED TO BE CLARIFIED BEFORE RELEASE.
6. THE ABUTMENT SLOPE TOE BERM SHALL BE 3 FEET TALL. THE BERM MAY BE CONSTRUCTED WITH ROCK IN ACCORDANCE WITH REQUIREMENTS FOR ROCK DITCH CHECKS ON ECD-8 OR WITH SOIL IN ACCORDANCE WITH TEC-2 IF BERM IS USED. IT MUST BE GRASSED

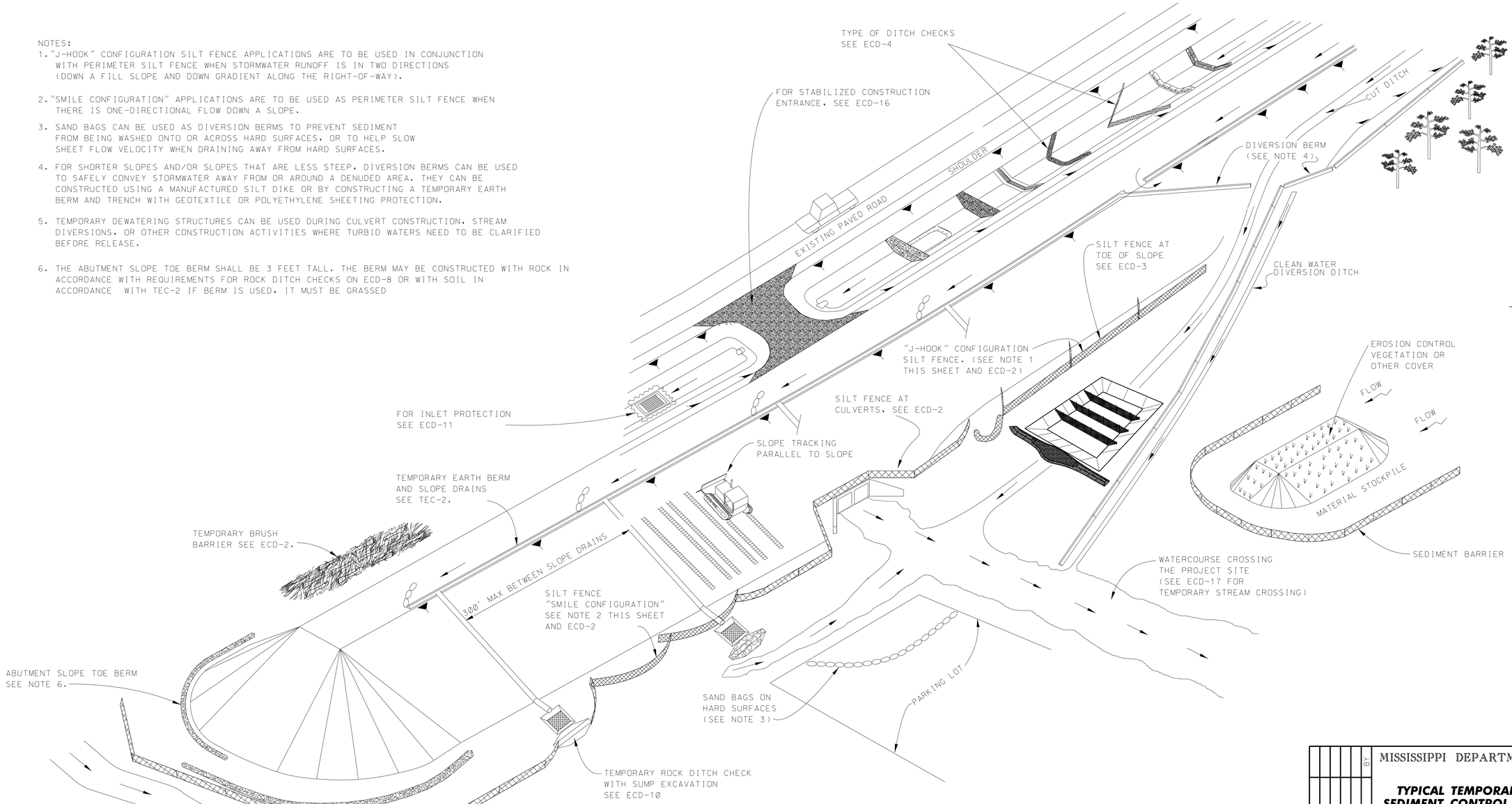


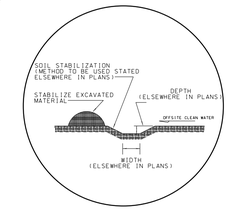


CLEAN WATER DIVERSION DITCH

| DATE | REVISION | BY |
|---|---|---|
| | | |

MISSISSIPPI DEPARTMENT OF TRANSPORTATION

**TYPICAL TEMPORARY EROSION/ SEDIMENT CONTROL APPLICATIONS**

COUNTY: PIKE

PROJ. NUM.: ER-0246-00(015)

FILENAME: ECD-1.DGN

DESIGN TEAM _____ CHECKED _____ DATE 9/29/15

WORKING NUMBER ECD-1

SHEET NUMBER 13

PLAN
ROADWAY DESIGN DIVISION
MISSISSIPPI DEPARTMENT OF TRANSPORTATION

8/16/2016 2:30:22 P:\ECD-1.DGN

| STATE | PROJECT NO. |
|---|---|
| MISS. | ER-0246-00(015) |

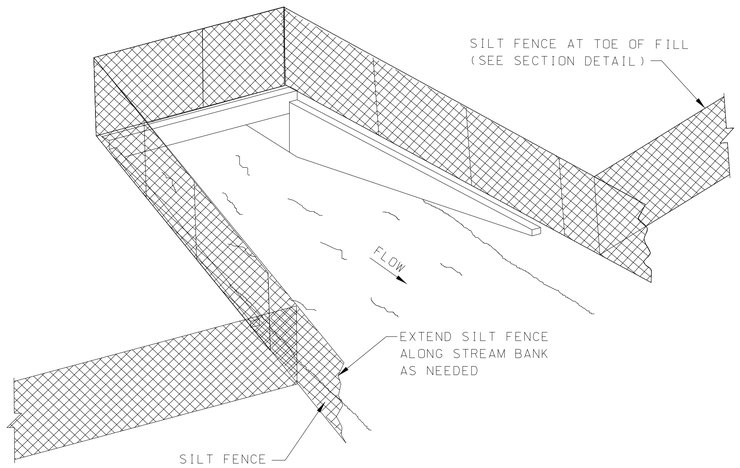


## SEDIMENT BARRIER AT CROSS DRAIN

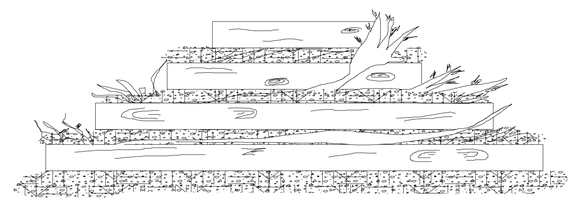

FRONT ELEVATION

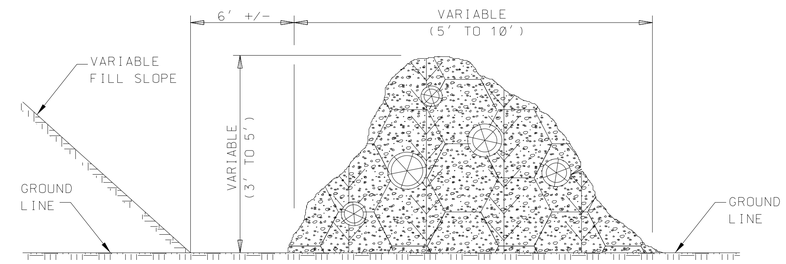


SIDE ELEVATION

## TEMPORARY BRUSH BARRIER

NOTES:
1. BRUSH BARRIER MAY BE USED WHERE NATURAL GROUND IS LEVEL OR SLOPING AWAY FROM PROJECT.
2. PLACE BRUSH, LOG AND TREE LAPS APPROXIMATELY PARALLEL TO TOE OF FILL SLOPE WITH SOME OF THE HEAVIER MATERIALS BEING PLACED ON TOP TO PROPERLY SECURE THE BARRIER AS DETAILED AT LOCATIONS SHOWN ON PLANS OR AS DIRECTED OR PERMITTED BY THE ENGINEER.
3. TO ALLOW WATER TO SEEP THROUGH BRUSH BARRIER, INTERMINGLE THE BRUSH, LOG AND TREE LAPS SO AS NOT TO FORM A SOLID DAM.
4. THE BRUSH BARRIER MAY BE CHOKED WITH FILTER FABRIC.
5. TEMPORARY BRUSH BARRIER WILL NOT BE MEASURED FOR SEPERATE PAYMENT

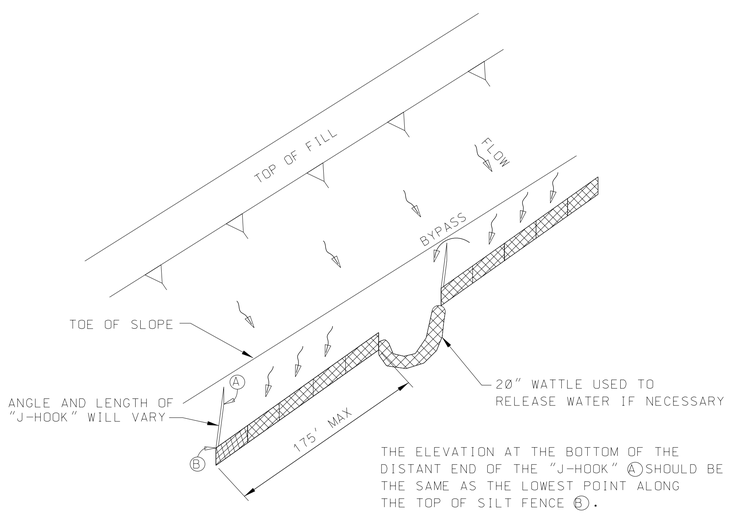


## "J-HOOK" SILT FENCE APPLICATION

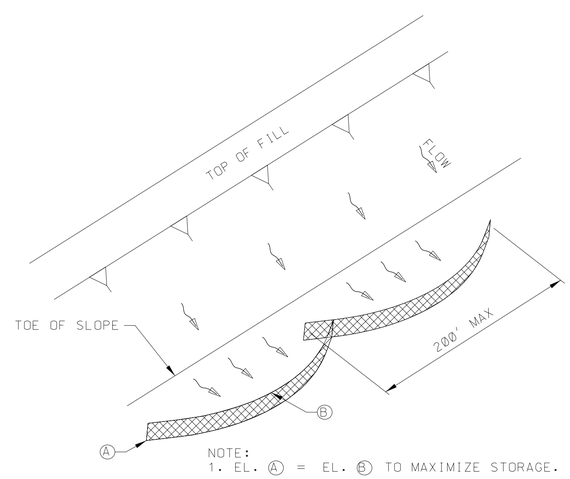


NOTE:
1. EL. (A) = EL. (B) TO MAXIMIZE STORAGE.

## "SMILE-CONFIGURATION" SILT FENCE APPLICATION

NOTE:
1. ANCHOR AND INSTALL SILT FENCE PER DETAILS SHOWN ON ECD-3

* SILT FENCE SHOULD BE LOCATED AWAY FROM THE TOE OF THE SLOPE TO PROVIDE SUFFICIENT SPACE TO ALLOW A BROAD, FLAT AREA FOR SEDIMENT ACCUMULATION AND MAINTENANCE ACTIVITIES. THE ENDS OF THE SILT FENCE SHOULD BE TURNED UP GRADIENT TO MAXIMIZE STORAGE.

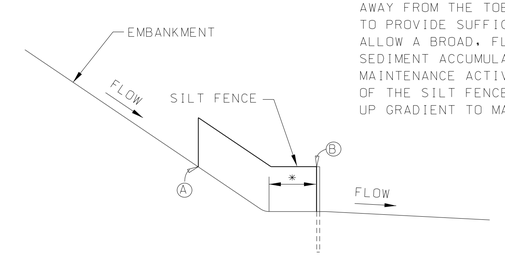


## SILT FENCE SECTION AT TOE OF FILL

| REVISION | BY | DATE |
|---|---|---|
| | | |

MISSISSIPPI DEPARTMENT OF TRANSPORTATION

**DETAILS OF SEDIMENT BARRIER APPLICATIONS**

COUNTY: PIKE
PROJ. NUM.: ER-0246-00(015)

FILENAME: ECD-2.DGN
DESIGN TEAM ____ CHECKED ____ DATE 9/29/15

WORKING NUMBER: ECD-2
SHEET NUMBER: 14

PLAN
ROADWAY DESIGN DIVISION
MISSISSIPPI DEPARTMENT OF TRANSPORTATION

8/16/2016 2:30:29 P:\ECD-2.DGN

| STATE | PROJECT NO. |
|---|---|
| MISS. | ER-0246-00(015) |

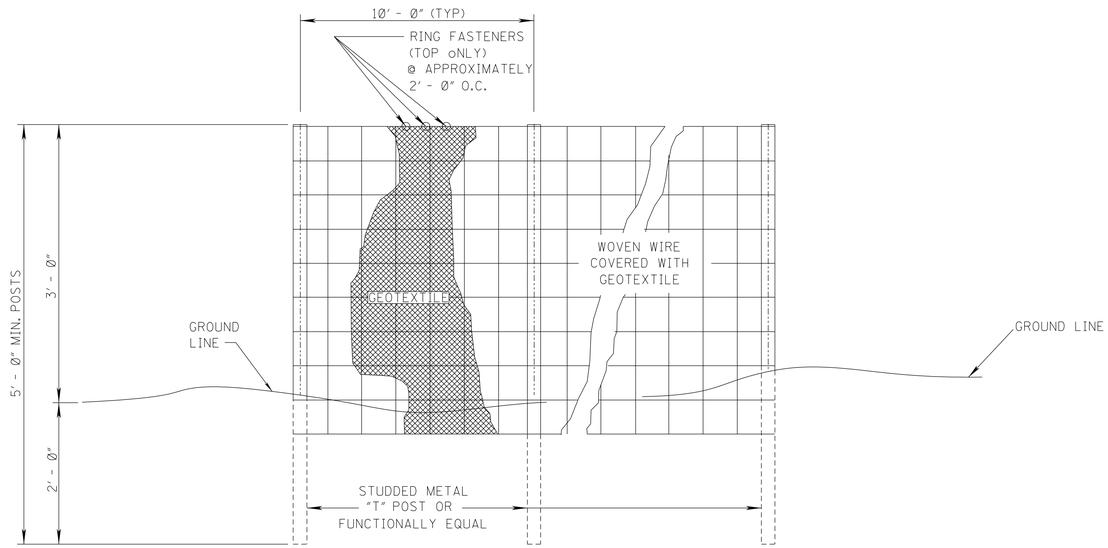


ELEVATION VIEW

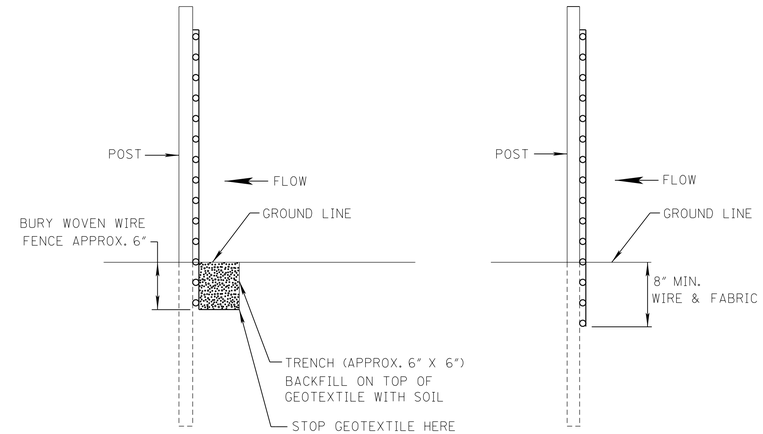


METHOD I

METHOD II
MECHANICAL INSTALLATION

SIDE VIEW

NOTES:

1. SILT FENCES SHALL BE USED IN AREAS WHERE FLOW IS NOT SEVERE.
2. SILT FENCES ARE TEMPORARY SEDIMENT CONTROL ITEMS THAT SHALL BE ERECTED OPPOSITE ERODIBLE AREAS SUCH AS NEWLY GRADED FILL SLOPES AND ADJACENT TO STREAMS AND CHANNELS.
3. SILT FENCE SHOULD BE PLACED WELL INSIDE RIGHT-OF-WAY AND ALONG EDGE OF CLEARING LIMITS. THIS WILL ALLOW ROOM FOR A BACK-UP FENCE IF FIRST FENCE BECOMES FULL.
4. WHEREVER POSSIBLE SILT FENCE SHALL BE CONSTRUCTED ACROSS A LEVEL AREA IN THE SHAPE OF A SMILE. THIS AIDS IN PONDING OF RUNOFF AND FACILITATES SEDIMENTATION.
5. THE CONTRACTOR MAY ELECT TO USE EITHER METHOD I OR METHOD II. COST TO BE LINEAR FEET OF SILT FENCE.
6. METHOD II INSTALLATION SHALL BE ACCOMPLISHED USING AN IMPLEMENT THAT IS MANUFACTUREED FOR THE APPLICATION AND PROVIDES A CONFIGURATION MEETING THE REQUIREMENTS OF THE DETAIL.
7. WIRE SHALL BE MINIMUM OF 32" IN WIDTH AND SHALL HAVE A MINIMUM OF 6 LINE WIRES WITH 12" STAY SPACING.
8. GEOTEXTILE FABRIC MEETING THE TYPE II MATERIAL REQUIREMENTS AND INSTALLED ACCORDING TO SPECIFICATION MAY BE USED WITHOUT WIRE FENCE,

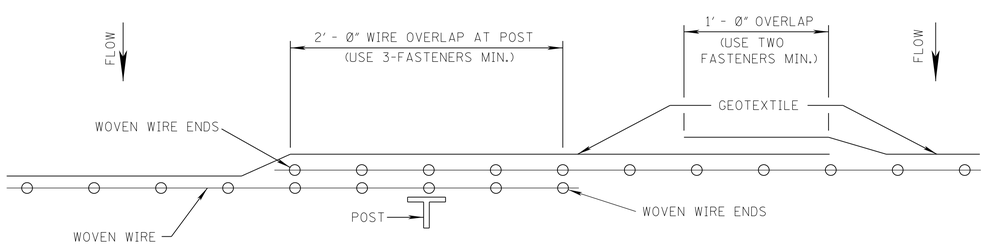


PLAN VIEW

REQUIRED LAPPING

| REVISION | BY | DATE |
|---|---|---|
| | | |

MISSISSIPPI DEPARTMENT OF TRANSPORTATION

**DETAILS OF SILT FENCE INSTALLATION**

COUNTY: PIKE

PROJ. NUM.: ER-0246-00(015)

FILENAME: ECD-3.DGN

DESIGN TEAM _____ CHECKED _____ DATE 9/29/15

WORKING NUMBER ECD-3

SHEET NUMBER 15

PLAN
ROADWAY DESIGN DIVISION
MISSISSIPPI DEPARTMENT OF TRANSPORTATION

8/16/2016 2:30:32 P:\ECD-3.DGN

| STATE | PROJECT NO. |
|---|---|
| MISS. | ER-0246-00(015) |

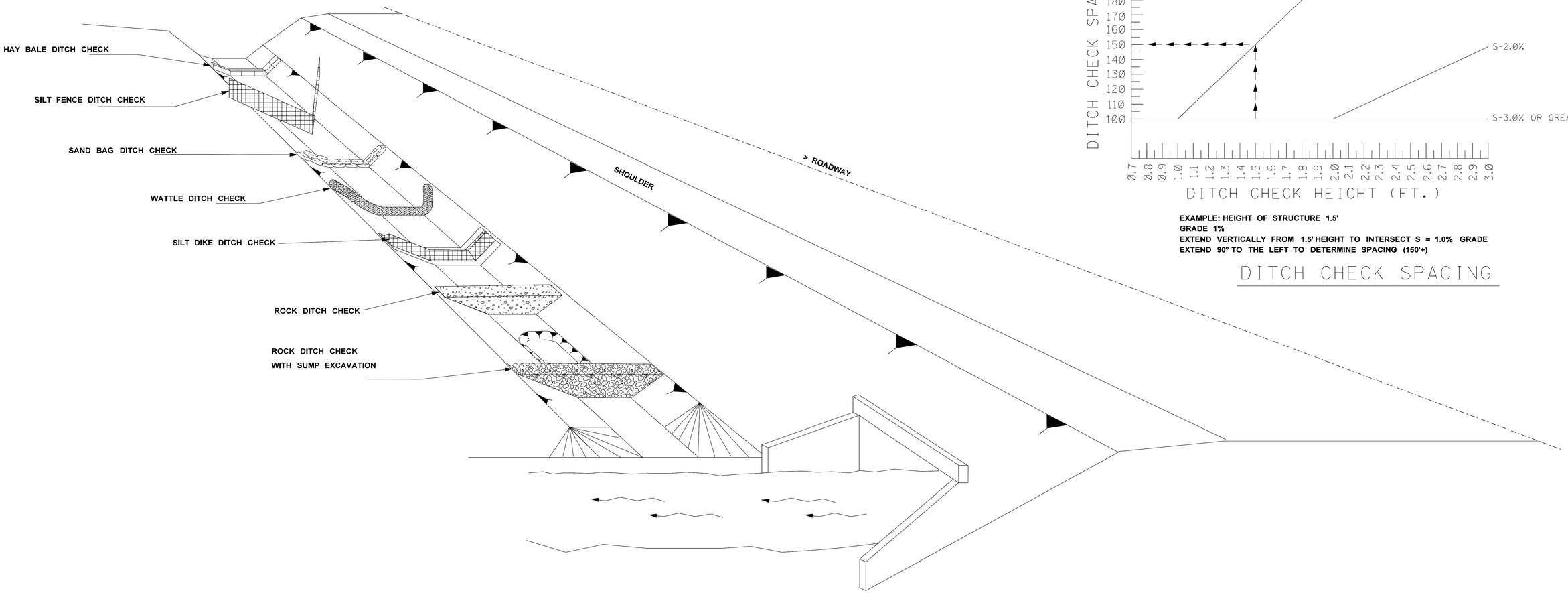


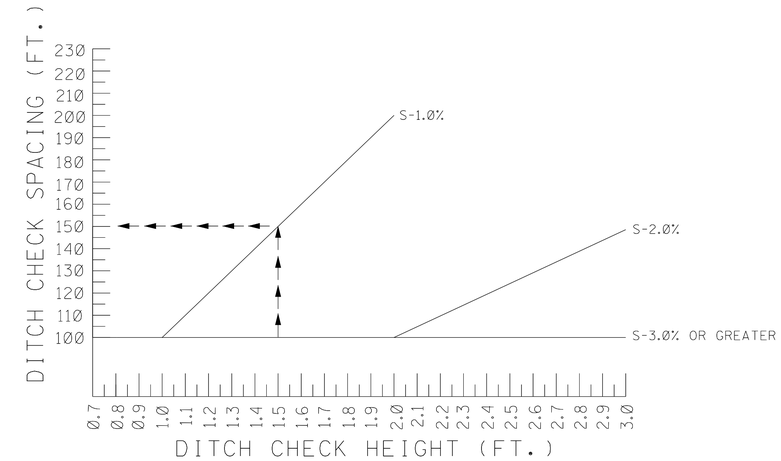


**EXAMPLE: HEIGHT OF STRUCTURE 1.5'**
**GRADE 1%**
**EXTEND VERTICALLY FROM 1.5' HEIGHT TO INTERSECT S = 1.0% GRADE**
**EXTEND 90° TO THE LEFT TO DETERMINE SPACING (150'+)**

## DITCH CHECK SPACING

NOTES:

1. THE DITCH CHECK PERSPECTIVE ILLUSTRATES A TOOL BOX OF TEMPORARY PRACTICES THAT MAY BE USED. DITCH CHECKS ARE INSTALLED TO CONTROL RUNOFF VELOCITY AND THUS REDUCE EROSION AND PROVIDE FOR TRAPPING OF SEDIMENTS.
2. SELECTION OF THE APPROPRIATE DITCH CHECK SHOULD BE A FUNCTION OF CONSTRUCTION PHASE, DRAINAGE AREA, DITCH GRADIENT, SOIL TYPE ECONOMY AND SAFETY.
3. DITCH CHECKS CAN BE REMOVED FOR MAINTENANCE AND/OR REPLACEMENT BUT MUST REMAIN IN PLACE UNTIL UPSLOPE AREAS HAVE BEEN PERMANENTLY STABILIZED. MAINTENANCE INCLUDES REMOVAL OF SEDIMENT BEGINNING WHEN SEDIMENT ACCUMULATION REACHES 1/3 THE CAPACITY OR HEIGHT OF THE STRUCTURE AND NEVER ALLOWING FOR SEDIMENT TO ACCUMULATE MORE THAN 1/2 THE VOLUME OR HEIGHT OF THE DITCH CHECK STRUCTURE.
4. HAY BALES ARE USED TO INTERCEPT LOW VOLUME FLOWS IN LOW TO MODERATE GRADIENT DITCHES.
5. SILT FENCE DITCH CHECKS ARE USED WHERE IT HAS BEEN DETERMINED THAT HAY BALE CHECKS ARE INADEQUATE. SILT FENCE DITCH CHECKS ARE USED TO INTERCEPT LOW VOLUME FLOWS IN LOW TO MODERATE GRADIENT DITCHES.
6. SAND BAG DITCH CHECKS ARE USED FOR VELOCITY REDUCTION AND MINIMAL SEDIMENT TRAPPING IN CONCRETE PAVED DITCHES OR IN DITCHES THAT HAVE ROCKY BOTTOMS.
7. WATTLE DITCH CHECKS ARE APPROPRIATE FOR VELOCITY REDUCTION AND CONTROL OF SEDIMENT TRANSPORT UNDER LOW TO MEDIUM FLOW CONDITIONS.
8. SILT DIKES CAN BE USED IN DITCHES WITH CONCENTRATED FLOWS WITHIN THE CLEAR ZONE WHERE RIPRAP CAN NOT BE USED. AS CONSTRUCTION PROGRESSES.
9. ROCK DITCH CHECK WITH SUMP EXCAVATION CAN BE PLACED IN DITCHES TO ASSURE ON-SITE SEDIMENT TRAPPING REQUIREMENTS ARE MET. DITCH CHECK WITH SUMP EXCAVATION IS USED WHEN DITCHES RECEIVE DRAINAGE FROM CUT OR FILL SLOPES OR OTHER CRITICAL AREAS WHERE SOIL EROSION IS EXPECTED. DRAINAGE AREA FOR A TEMPORARY SEDIMENT TRAP SHALL NOT EXCEED 3 ACRES. THEY CAN BE USED IN SERIES TO INCREASE ON-SITE SEDIMENT TRAPPING EFFICIENCY.
10. IN GENERAL, DITCH CHECKS SHOULD NOT BE PLACED IN LIVE STREAMS.
11. CONFIGURATION AND SPACING MAY BE ADJUSTED IF APPROVED BY THE ENGINEER TO ACCOMODATE TRAVELWAY SAFETY, WATER FLOW, OR SOIL AND INSTALLATION CHALLENGES.

| REVISION | BY | DATE |
|---|---|---|
| | | |

MISSISSIPPI DEPARTMENT OF TRANSPORTATION

**DITCH CHECK STRUCTURES, TYPICAL APPLICATIONS AND DETAILS**

COUNTY: PIKE
PROJ. NUM.: ER-0246-00(015)

FILENAME: ECD-4.DGN
DESIGN TEAM _____ CHECKED _____ DATE 9/29/15

WORKING NUMBER
ECD-4

SHEET NUMBER
16

PLAN
ROADWAY DESIGN DIVISION
MISSISSIPPI DEPARTMENT OF TRANSPORTATION

8/16/2016 2:30:34 PM ECD-4.DGN

| STATE | PROJECT NO. |
|---|---|
| MISS. | ER-0246-00(015) |

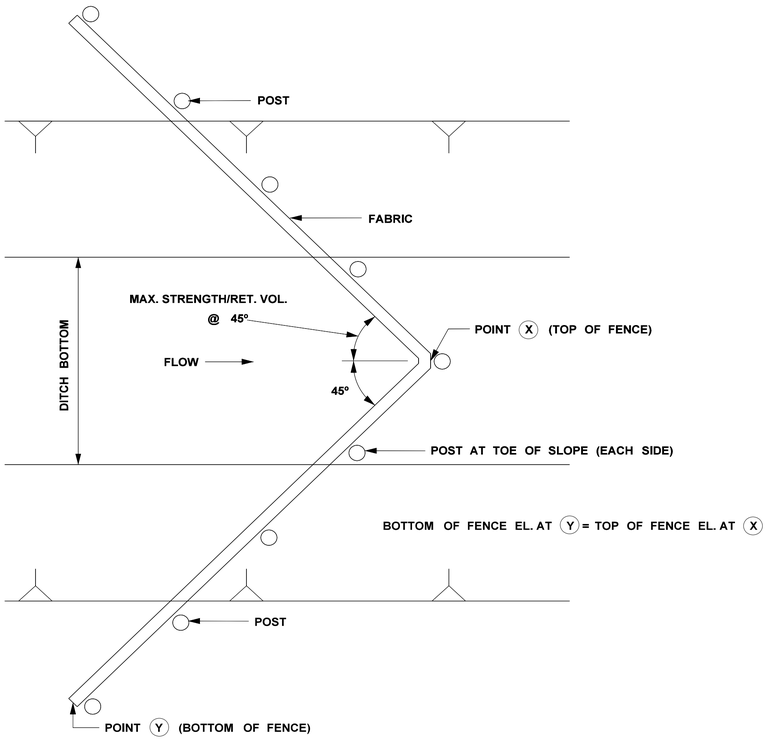


## PLAN VIEW

NOTES:

1. ANCHOR AND INSTALL PER DETAILS FOR SILT FENCE SPACING GUIDELINES ON ECD-4
2. A "W" SHAPE MAY BE USED FOR WIDER DITCHES.

### SILT FENCE DITCH CHECK SELECTION GUIDELINES

SILT FENCE DITCH CHECKS ARE USED WHERE IT HAS BEEN DETERMINED THAT HAY BALE CHECKS ARE INADEQUATE. SILT FENCE DITCH CHECKS ARE USED TO INTERCEPT LOW VOLUME FLOWS IN LOW TO MODERATE GRADIENT DITCHES.

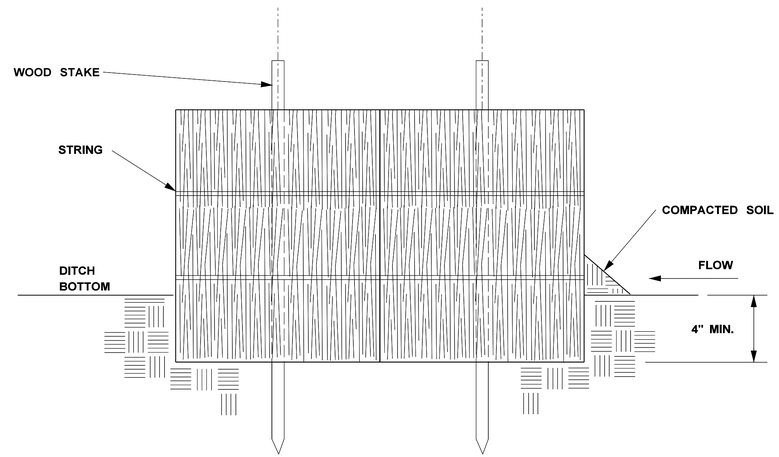


## SECTION A-A

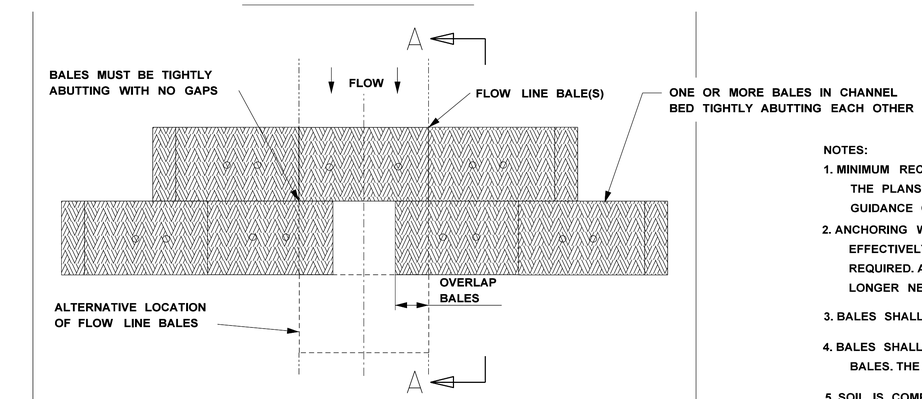


## PLAN VIEW
## TRAPEZOIDAL DITCH

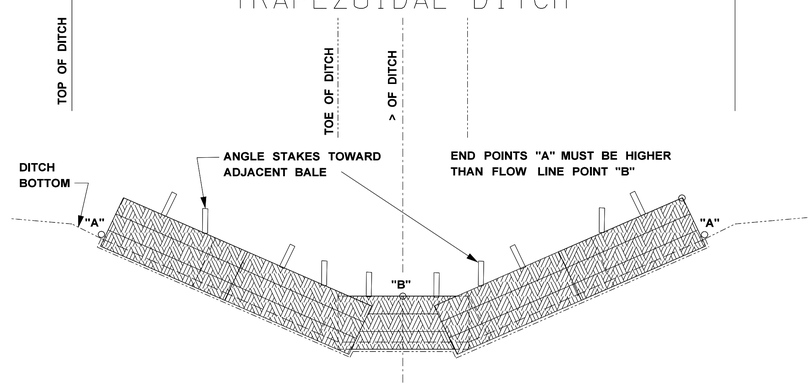


## PROFILE VIEW
## TRAPEZOIDAL DITCH

NOTES:

1. MINIMUM RECOMMENDED CHECK SPACING IS 100 FEET UNLESS SHOWN OTHERWISE ON THE PLANS OR EROSION CONTROL PLAN APPROVED BY THE ENGINEER, SEE SPACING GUIDANCE ON ECD-4.
2. ANCHORING WOOD STAKES SHALL BE SIZED, SPACED, AND BE OF A MATERIAL THAT EFFECTIVELY SECURES THE CHECK. A MINIMUM OF TWO STAKES PER BALE IS REQUIRED. ALL NON-DEGRADABLE MATERIALS SHALL BE REMOVED WHEN NO LONGER NEEDED.
3. BALES SHALL BE EMBEDDED IN THE SOIL A MIN. OF 4".
4. BALES SHALL BE PLACED IN A ROW WITH ENDS TIGHTLY ABUTTING THE ADJACENT BALES. THE BALES SHALL BE PLACED WITH BINDINGS PARALLEL TO THE GROUND.
5. SOIL IS COMPACTED ALONG THE BASE OF THE UPSTREAM FACE TO PREVENT PIPING.
6. MULTIPLE ADJACENT ROWS OF BALES ARE REQUIRED AS SHOWN.

### HAY BALE DITCH CHECK SELECTION GUIDELINES

HAY BALES ARE USED TO INTERCEPT LOW VOLUME FLOWS IN LOW TO MODERATE GRADIENT DITCHES.

| DATE | REVISION | BY |
|---|---|---|
| | | |

MISSISSIPPI DEPARTMENT OF TRANSPORTATION

**TEMPORARY EROSION, SEDIMENT AND WATER POLLUTION CONTROL MEASURES, SILT FENCE AND HAY BALE DITCH CHECKS**

COUNTY: PIKE

PROJ. NUM.: ER-0246-00(015)

FILENAME: ECD-5.DGN

DESIGN TEAM _____ CHECKED _____ DATE 9/29/15

WORKING NUMBER: ECD-5

SHEET NUMBER: 17

PLAN
ROADWAY DESIGN DIVISION
MISSISSIPPI DEPARTMENT OF TRANSPORTATION

8/16/2016 2:30:36 PM ECD-5.DGN

FMS CON: 107382/301000

| STATE | PROJECT NO. |
|---|---|
| MISS. | ER-0246-00(015) |

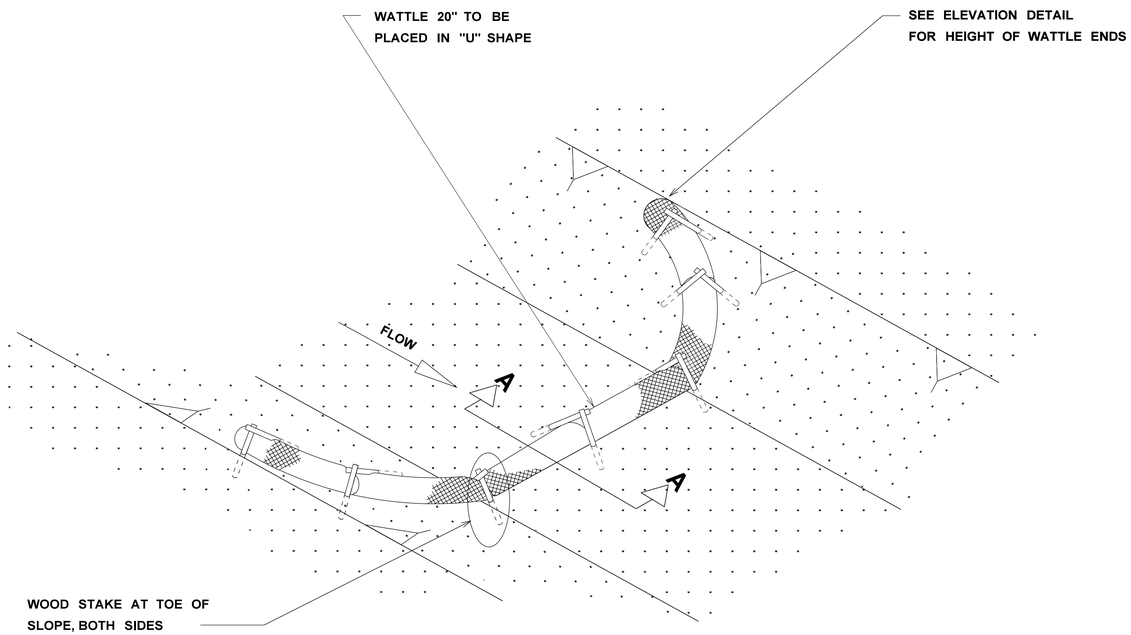


DETAIL (DITCH CHECK)

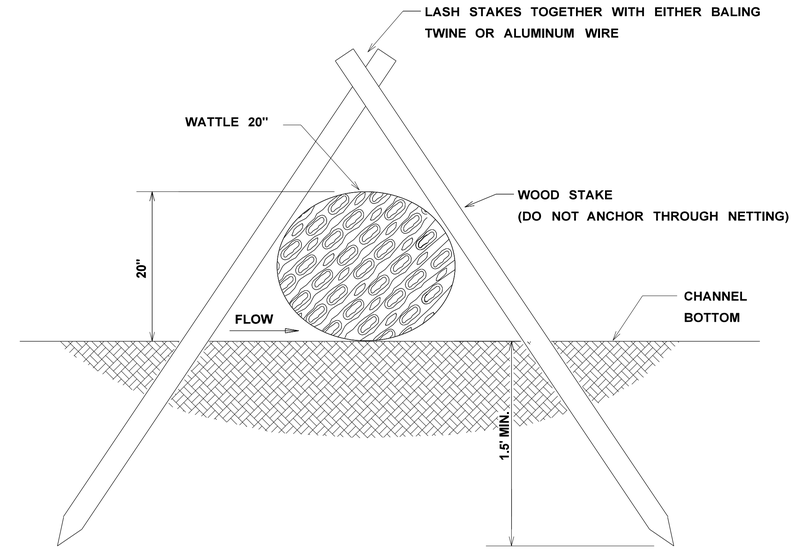


SECTION A-A

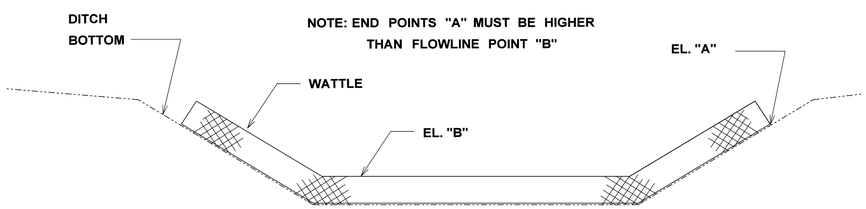


ELEVATION DETAIL

NOTES:

1. MINIMUM RECOMMENDED PLACEMENT INTERVAL BETWEEN WATTLE DITCH CHECK IS 100' UNLESS SHOWN OTHERWISE ON THE PLANS OR EROSION CONTROL PLAN APPROVED BY THE ENGINEER. SEE SPACING GUIDANCE ON ECD-4
2. ANCHORING WOOD STAKES SHALL BE SIZED, SPACED, DRIVEN, AND BE OF A MATERIAL THAT EFFECTIVELY SECURES THE CHECK. STAKE SPACING SHALL BE A MAXIMUM OF THREE FEET. ALL NON-DEGRADABLE MATERIALS SHALL BE REMOVED WHEN NO LONGER NEEDED.
3. TRENCHING OF WATTLES MAY BE NECESSARY IF PIPING BECOMES EVIDENT.
4. WATTLES SHOULD NOT BE USED IN HARD BOTTOM CHANNELS.
5. IN THE EVENT WATTLES CANNOT BE SECURED IN PLACE USING WOOD STAKES, SAND BAGS MAY BE USED IN LIEU OF WOOD STAKES IN ORDER TO SECURE WATTLES IN PLACE. IF SAND BAGS ARE USED IN THIS APPLICATION THEY WILL NOT BE A SEPERATE PAY ITEM.

WATTLE DITCH CHECK SELECTION GUIDELINES

WATTLE DITCH CHECKS ARE APPROPRIATE FOR VELOCITY REDUCTION AND CONTROL OF SEDIMENT TRANSPORT UNDER LOW TO MEDIUM FLOW CONDITIONS.

| DATE | REVISION | BY |
|---|---|---|

MISSISSIPPI DEPARTMENT OF TRANSPORTATION

**DETAILS OF EROSION CONTROL WATTLE DITCH CHECK**

COUNTY: PIKE

PROJ. NUM.: ER-0246-00(015)

FILENAME: ECD-6.DGN

DESIGN TEAM _____ CHECKED _____ DATE 9/29/15

WORKING NUMBER ECD-6

SHEET NUMBER 18

PLAN
ROADWAY DESIGN DIVISION
MISSISSIPPI DEPARTMENT OF TRANSPORTATION

8/16/2016 2:30:39 P:\ECD-6.DGN

| STATE | PROJECT NO. |
|---|---|
| MISS. | ER-0246-00(015) |

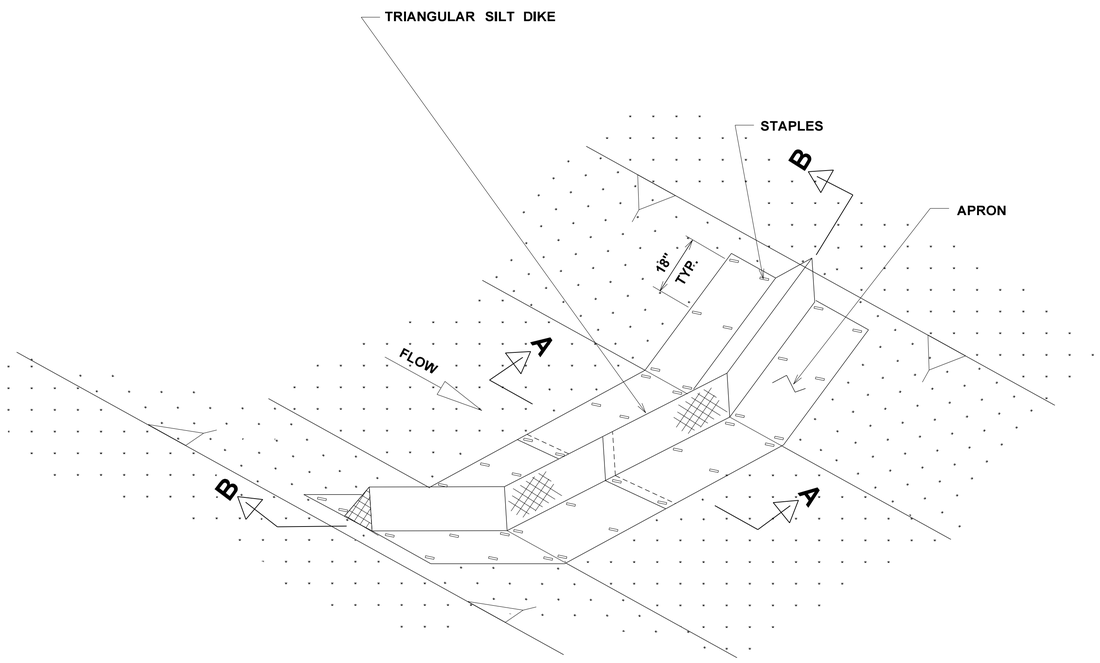


PLAN VIEW

## SILT DIKE DITCH CHECK SELECTION GUIDELINES

**SILT DIKES CAN BE USED IN DITCHES WITH CONCENTRATED FLOWS WITHIN THE CLEAR ZONE WHERE RIPRAP CAN NOT BE USED.**

**NOTE:**

1. **MINIMUM RECOMMENDED PLACEMENT INTERVAL BETWEEN SILT DIKE DITCH CHECK IS 100' UNLESS SHOWN OTHERWISE ON THE PLANS OR EROSION CONTROL PLAN APPROVED BY THE ENGINEER. SEE SPACING GUIDANCE ON ECD-4**
2. **INSTALLATION SHALL BE IN ACCORDANCE WITH MANUFACTURERS RECOMMENDATIONS.**

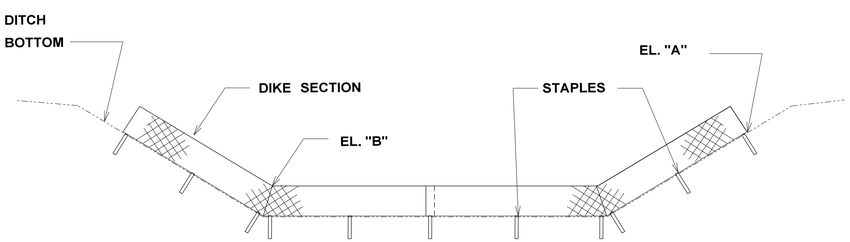


**POINT "A" MUST BE HIGHER THAN POINT "B" TO ENSURE THAT WATER FLOWS OVER THE DIKE AND NOT AROUND THE ENDS**

SECTION B-B

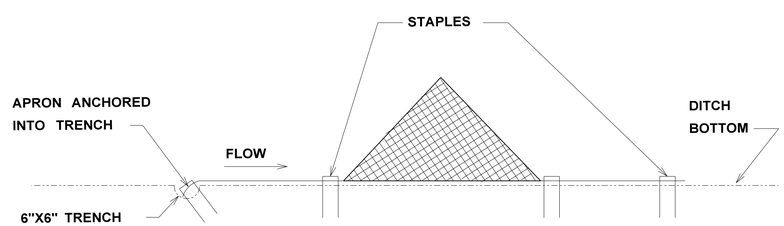


**NOTE: STAPLES SHALL BE PLACED WHERE THE UNITS OVERLAP AND IN THE CENTER OF THE UNIT**

SECTION A-A

# SILT DIKE INSTALLATION FOR ROADWAY DITCHES

| DATE | REVISION | BY |
|---|---|---|
| | | |

MISSISSIPPI DEPARTMENT OF TRANSPORTATION

**DETAILS OF EROSION CONTROL SILT DIKE DITCH CHECK**

COUNTY: PIKE

PROJ. NUM.: ER-0246-00(015)

FILENAME: ECD-7.DGN

DESIGN TEAM _____ CHECKED _____ DATE 9/29/15

WORKING NUMBER ECD-7

SHEET NUMBER 19

PLAN
ROADWAY DESIGN DIVISION
MISSISSIPPI DEPARTMENT OF TRANSPORTATION

8/16/2016 2:30:42 P:\ECD-7.DGN

| STATE | PROJECT NO. |
|---|---|
| MISS. | ER-0246-00(015) |

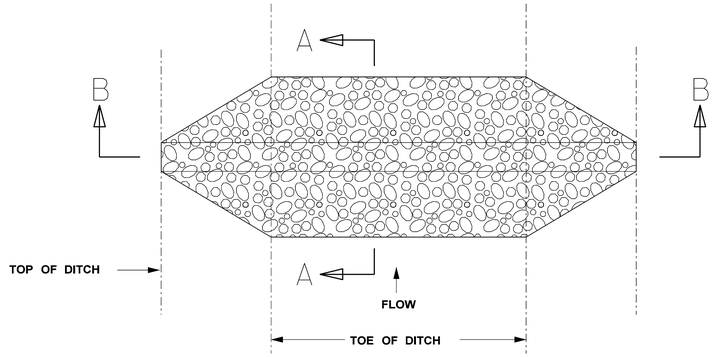


PLAN VIEW

DETAIL FOR TRAPEZOIDAL DITCH

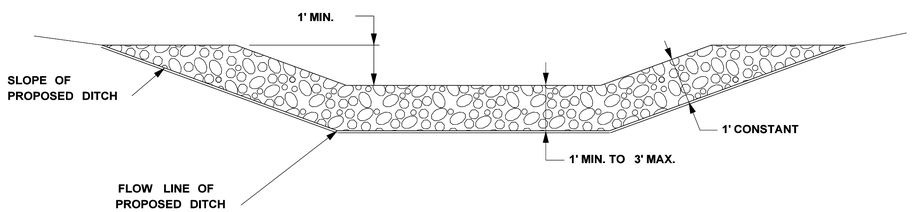


SECTION B-B

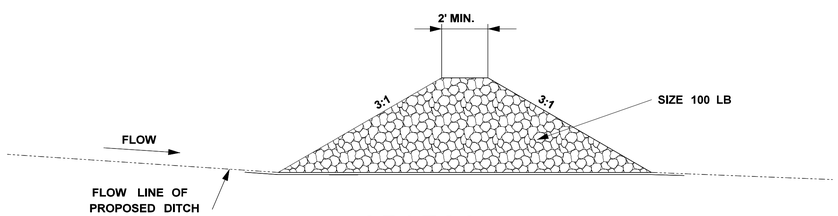


SECTION A-A

TEMPORARY ROCK DITCH CHECKS IN ROADSIDE DITCHES

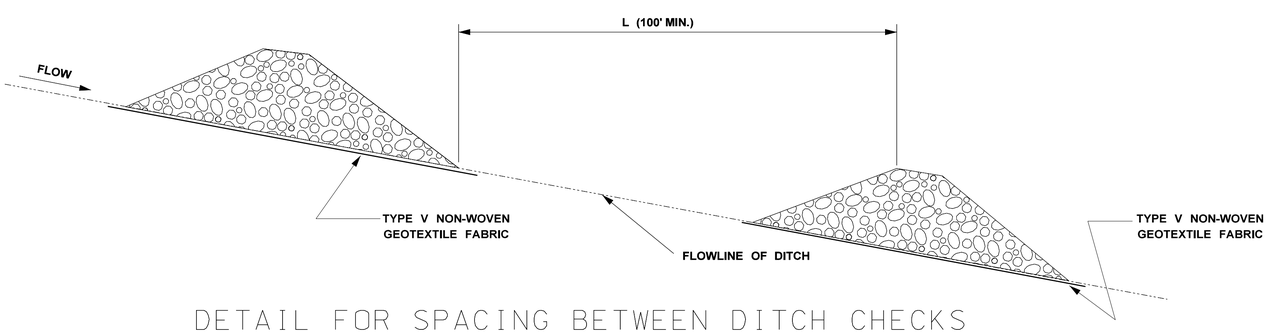


DETAIL FOR SPACING BETWEEN DITCH CHECKS

**NOTES:**

1. MINIMUM SPACING FOR ROCK DITCH CHECKS SHALL BE 100 FEET OR EROSION CONTROL PLAN APPROVED BY THE ENGINEER. SEE SPACING GUIDANCE ON ECD-4
2. ROCK DITCH CHECKS MAY ALSO BE CHOKED WITH FABRIC.
3. SIZE 300 LB RIP RAP MAY BE USED FOR SPECIFIED APPLICATIONS AS SHOWN ON EROSION CONTROL PLAN.
4. ROCK DITCH CHECKS SHOULD ONLY BE USED FOR REDUCING THE VELOCITY OF FLOWING WATER.
5. ROCK DITCH CHECKS SHOULD ONLY BE USED UP-GRADIENT OF AND ALONG WITH ADDITIONAL DOWN-GRADIENT SEDIMENT CONTROL BMP'S.
6. THE COST OF FABRIC SHALL BE INCLUDED IN OTHER ITEMS BID.

| DATE | REVISION | BY |
|---|---|---|
| | | |

MISSISSIPPI DEPARTMENT OF TRANSPORTATION

**ROCK DITCH CHECK**

COUNTY: PIKE

PROJ. NUM.: ER-0246-00(015)

FILENAME: ECD-8.DGN

DESIGN TEAM ____ CHECKED ____ DATE 9/29/15

WORKING NUMBER ECD-8

SHEET NUMBER 20

PLAN
ROADWAY DESIGN DIVISION
MISSISSIPPI DEPARTMENT OF TRANSPORTATION

8/16/2016 2:30:44 P:\ECD-8.DGN

| STATE | PROJECT NO. |
|---|---|
| MISS. | ER-0246-00(015) |

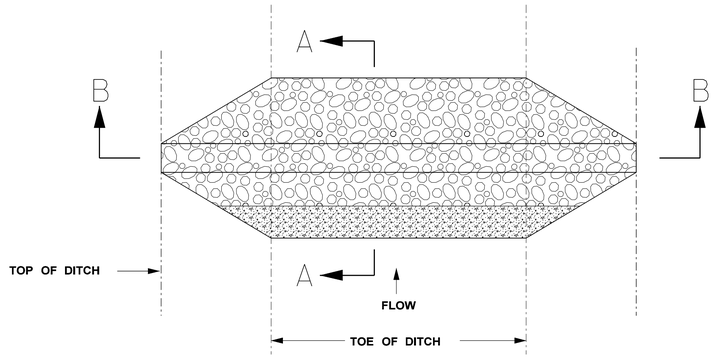


PLAN VIEW
DETAIL FOR TRAPEZOIDAL DITCH

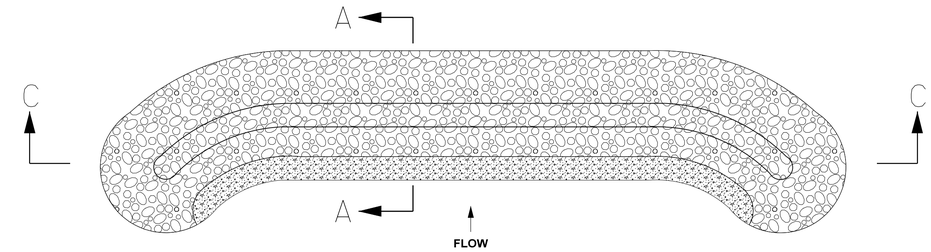


PLAN VIEW
DETAIL FOR USE OTHER THAN DITCH

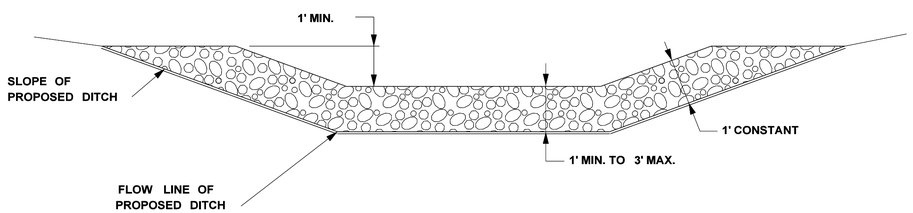


SECTION B-B

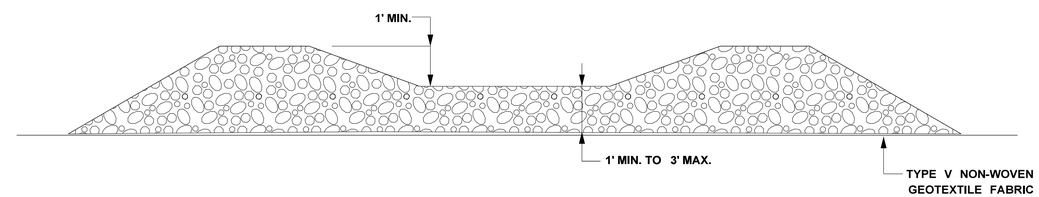


SECTION C-C

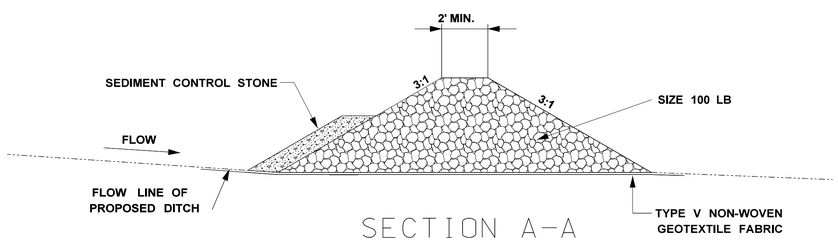


SECTION A-A

TEMPORARY ROCK DITCH CHECKS IN ROADSIDE DITCHES

**NOTES:**

1. ROCK FILTER DAMS (RFD) MAY BE USED AS A DISCHARGE STRUCTURE WHILE WORKING WITH HIGHLY EROSIVE SOIL. RFD's MAY BE USED AS PART OF A "BMP TRAIN" AND MAY BE USED IN SUCCESSION AT A MINIMUM SPACING OF 100 FT OR PER THE EROSION CONTROL PLAN APPROVED BY THE ENGINEER.
2. SIZE 300 LB RIP RAP MAY BE USED FOR SPECIFIED APPLICATIONS AS SHOWN ON EROSION CONTROL PLAN.
3. SEDIMENT CONTROL STONE SHALL BE PLACED BETWEEN ⅓ AND ½ UP THE FACE OF THE RIP-RAP FROM THE GROUND.
4. THE COST OF THE FABRIC SHALL BE INCLUDED IN OTHER ITEMS BID.

| DATE | REVISION | BY |
|---|---|---|

MISSISSIPPI DEPARTMENT OF TRANSPORTATION

ROCK FILTER DAM

COUNTY: PIKE
PROJ. NUM.: ER-0246-00(015)

FILENAME: ECD-9.DGN
DESIGN TEAM ____ CHECKED ____ DATE 9/29/15

WORKING NUMBER
ECD-9

SHEET NUMBER
21

PLAN
ROADWAY DESIGN DIVISION
MISSISSIPPI DEPARTMENT OF TRANSPORTATION
8/16/2016 21:30:47 P:\ECD-9.DGN

| STATE | PROJECT NO. |
|---|---|
| MISS. | ER-0246-00(015) |

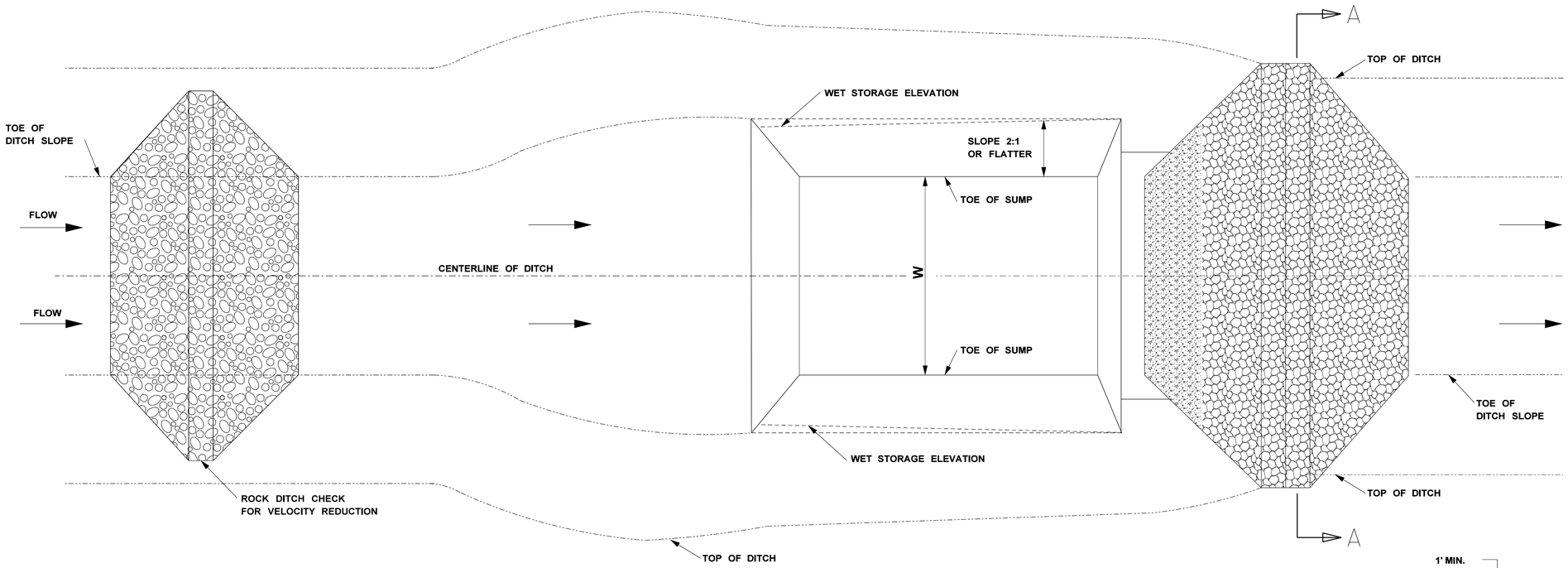


PLAN VIEW

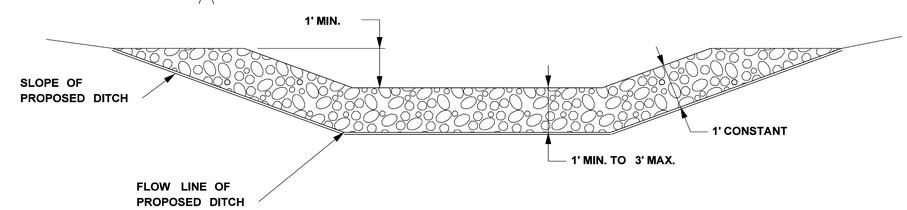


SECTION A-A

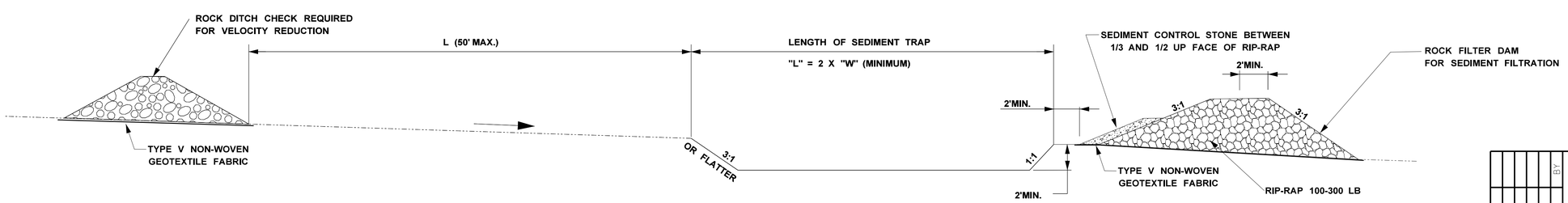


PROFILE VIEW

NOTE: THE COST OF FABRIC SHALL BE INCLUDED IN OTHER ITEMS BID.

MISSISSIPPI DEPARTMENT OF TRANSPORTATION

**ROCK DITCH CHECK WITH SUMP EXCAVATION AND ROCK FILTER DAM**

COUNTY: PIKE

PROJ. NUM.: ER-0246-00(015)

FILENAME: ECD-10.DGN

DESIGN TEAM _____ CHECKED _____ DATE 9/29/15

WORKING NUMBER: ECD-10

SHEET NUMBER: 22

REVISION | BY | DATE

PLAN
ROADWAY DESIGN DIVISION
MISSISSIPPI DEPARTMENT OF TRANSPORTATION

8/16/2016 2:30:49 P:\ECD-10.DGN

| STATE | PROJECT NO. |
|---|---|
| MISS. | ER-0246-00(015) |

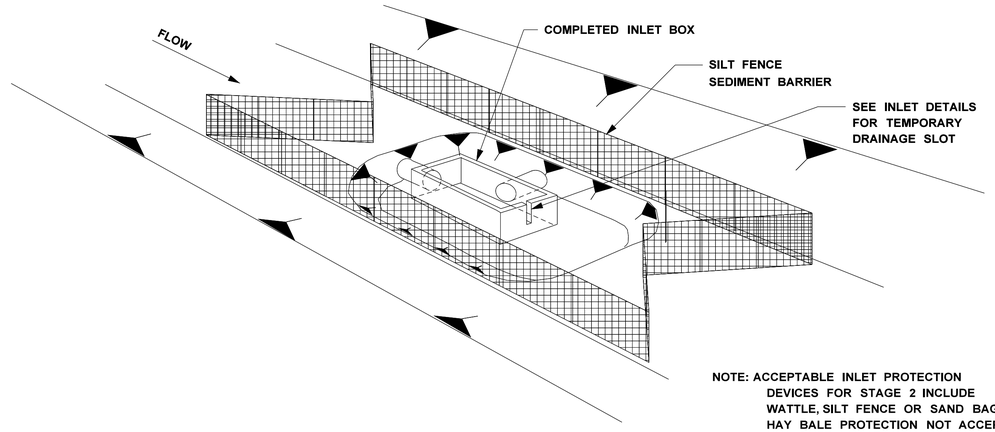


NOTE: ACCEPTABLE INLET PROTECTION DEVICES FOR STAGE 2 INCLUDE WATTLE, SILT FENCE OR SAND BAGS. HAY BALE PROTECTION NOT ACCEPTABLE DURING THIS PHASE.

## STAGE 2

INLET/JUNCTION BOX CONSTRUCTED BUT NOT BACKFILLED

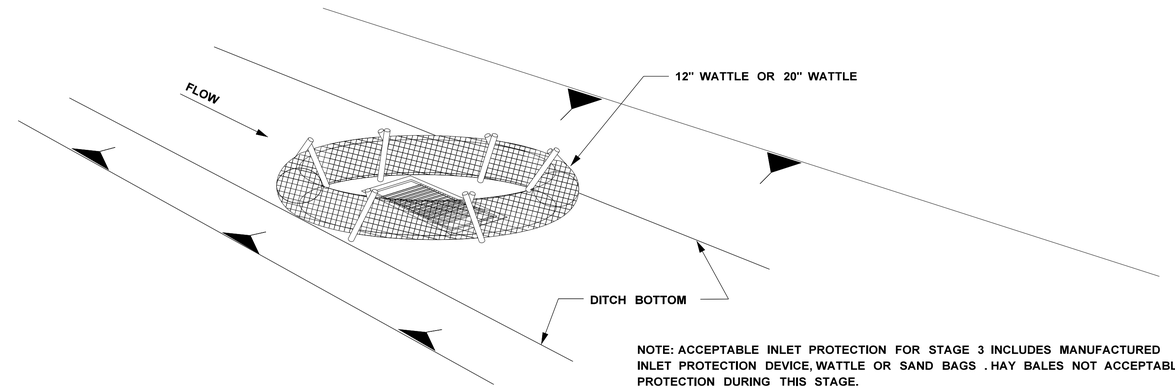


NOTE: ACCEPTABLE INLET PROTECTION FOR STAGE 3 INCLUDES MANUFACTURED INLET PROTECTION DEVICE, WATTLE OR SAND BAGS . HAY BALES NOT ACCEPTABLE PROTECTION DURING THIS STAGE.

## STAGE 3

INLET CONSTRUCTED AND BACKFILLED

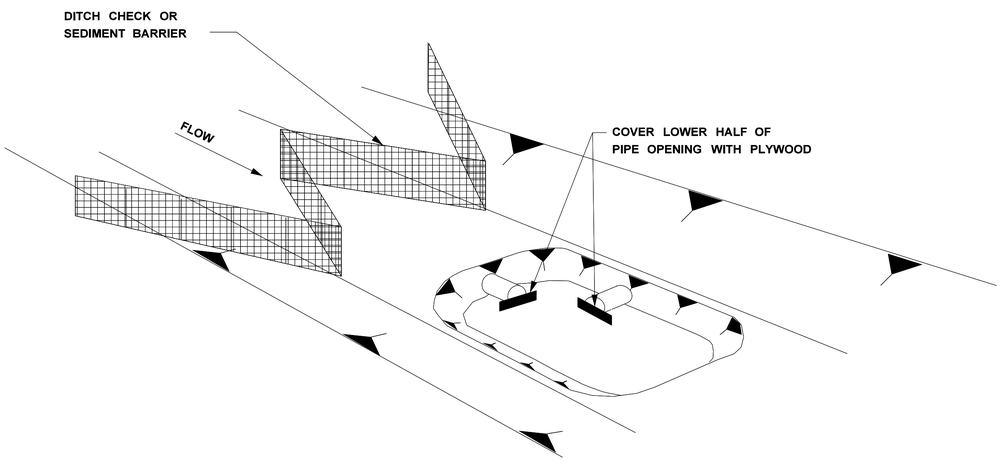


## STAGE 1

INLET/JUNCTION BOX LOCATION EXCAVATED

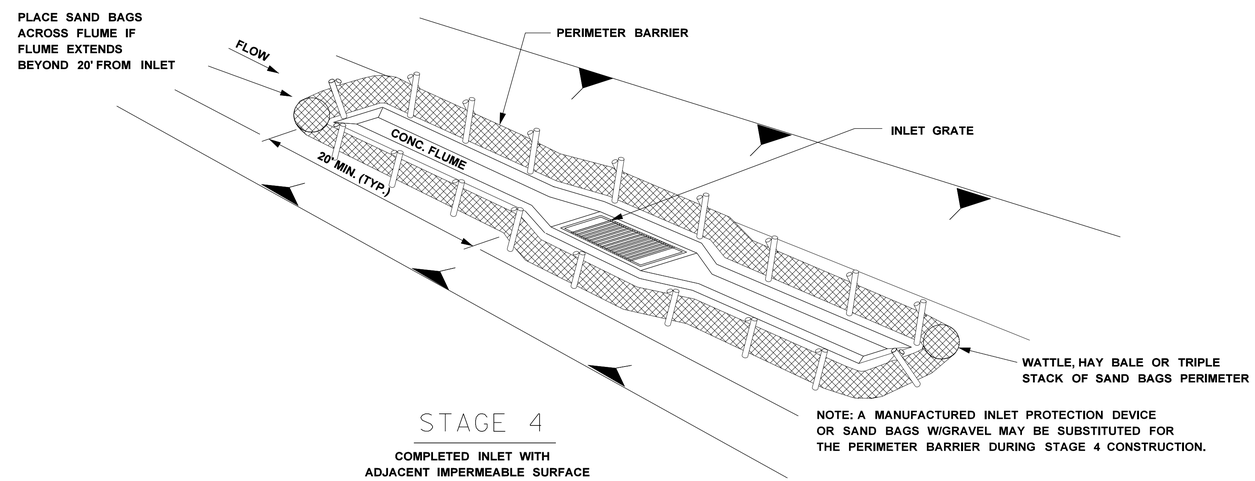


NOTE: A MANUFACTURED INLET PROTECTION DEVICE OR SAND BAGS W/GRAVEL MAY BE SUBSTITUTED FOR THE PERIMETER BARRIER DURING STAGE 4 CONSTRUCTION.

## STAGE 4

COMPLETED INLET WITH ADJACENT IMPERMEABLE SURFACE

# DITCH INLET CONSTRUCTION STAGES

NOTES:

1. FOUNDATION BACKFILL SHOULD BE PLACED IN STAGE 1 IMMEDIATELY AFTER PIPE INSTALLATION. INLET CONSTRUCTION SHOULD COMMENCE AS SOON AS POSSIBLE AND BE CONTINUOUS THROUGH COMPLETION.
2. CONFIGURATIONS MAY BE ADJUSTED WITH APPROVAL OF THE ENGINEER FOR TRAVELWAY SAFETY, WATER FLOW, SOIL OR INSTALLATION CHALLENGES.
3. DURING STAGE 1 AND STAGE 2, SILT FENCE MAY BE REQUIRED UPSLOPE OF THE INLET EXCAVATION AS DIRECTED BY THE ENGINEER.
4. IF SILT FENCING IS INSTALLED AROUND THE INLET EXCAVATION IT SHOULD BE PLACED IN A CONFIGURATION THAT WILL ALLOW INLET CONSTRUCTION.

| DATE | REVISION | BY |
|---|---|---|

MISSISSIPPI DEPARTMENT OF TRANSPORTATION

**INLET PROTECTION**
**TYPICAL APPLICATIONS AND DETAILS**

COUNTY: PIKE
PROJ. NUM.: ER-0246-00(015)

FILENAME: ECD-11.DGN
DESIGN TEAM _____ CHECKED _____ DATE 9/29/15

WORKING NUMBER
ECD-11

SHEET NUMBER
23

PLAN
ROADWAY DESIGN DIVISION
MISSISSIPPI DEPARTMENT OF TRANSPORTATION
8/16/2016 2:30:52 PM ECD-11.DGN

| STATE | PROJECT NO. |
|---|---|
| MISS. | ER-0246-00(015) |

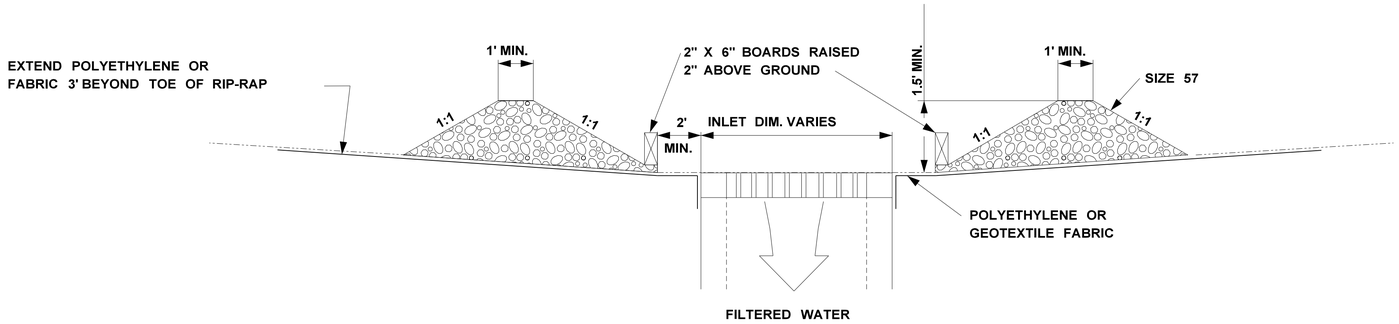


SECTION B-B

NOTES:

1. THE ELEVATION OF THE TOP OF THE REQUIRED STONE BERM SHALL BE A MINIMUM OF 1.5' ABOVE THE ELEVATION OF THE INLET WORKING POINT AND A MINIMUM OF 6" BELOW THE ELEVATION OF THE OUTSIDE EDGE OF THE INSIDE SHOULDER.
2. THIS COARSE AGGREGATE INLET PROTECTION SHALL NOT BE UTILIZED DURING STAGE 1 AND STAGE 2 INLET CONSTRUCTION. SEE INLET PROTECTION TYPICAL APPLICATIONS AND DETAILS)
3. 2" X 6" BOARDS MAY BE REPLACED WITH WIRE MESH W/OPENINGS LESS THAN 1" X 1". COST IS ABSORBED.
4. THE COST OF POLYETHYLENE AND/OR FABRIC SHALL BE INCLUDED IN OTHER ITEMS BID.

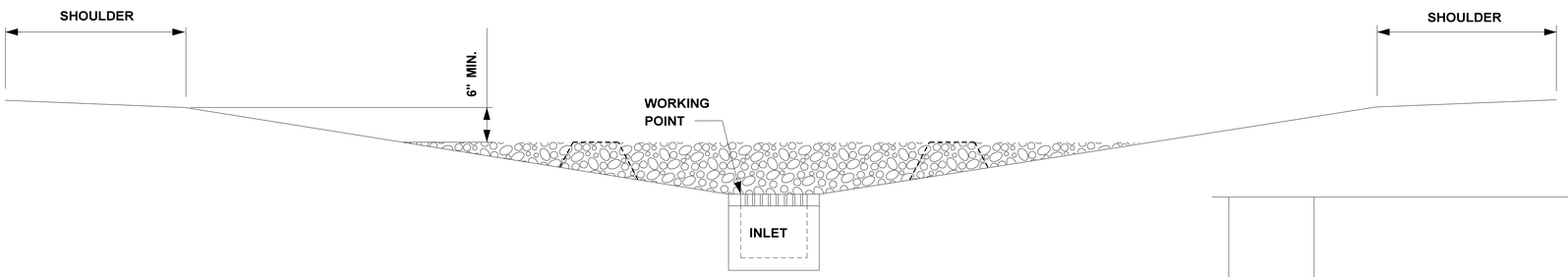


SECTION A-A

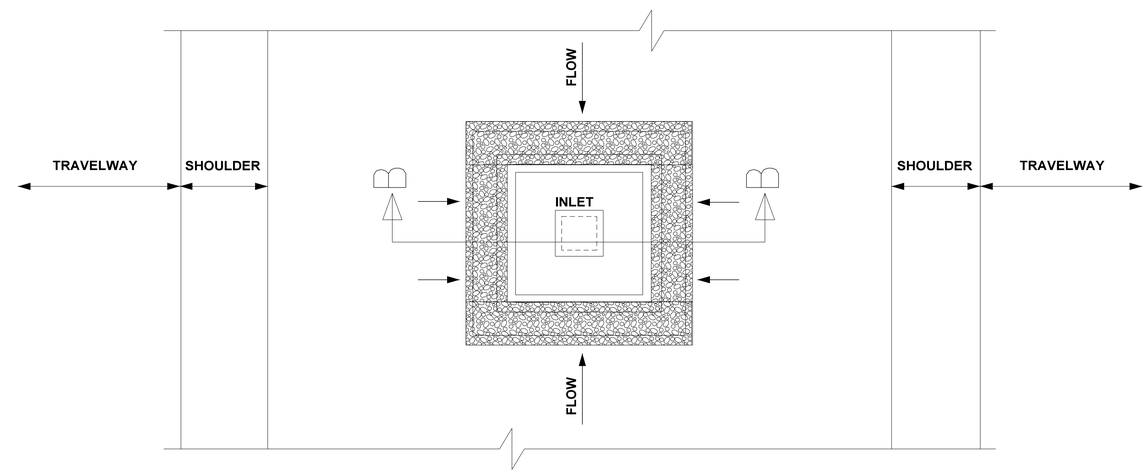


PLAN - IN SAG

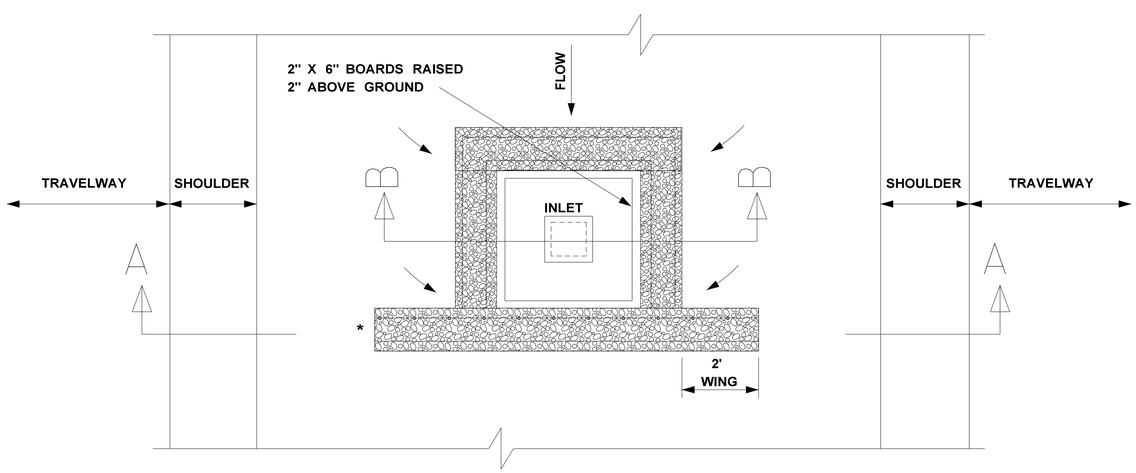


PLAN - ON GRADE

* CONSTRUCT WINGS TO PREVENT BYPASS

| DATE | REVISION | BY |
|---|---|---|
| | | |

MISSISSIPPI DEPARTMENT OF TRANSPORTATION

**INLET PROTECTION DETAILS FOR COARSE AGGREGATE ON GRADES & SAGS**

COUNTY: PIKE

PROJ. NUM.: ER-0246-00(015)

FILENAME: ECD-12.DGN

DESIGN TEAM _____ CHECKED _____ DATE 9/29/15

WORKING NUMBER ECD-12

SHEET NUMBER 24

PLAN
ROADWAY DESIGN DIVISION
MISSISSIPPI DEPARTMENT OF TRANSPORTATION

8/16/2016 2:30:54 P:\ECD-12.DGN

| STATE | PROJECT NO. |
|---|---|
| MISS. | ER-0246-00(015) |

NOTE:
SILT FENCE OR SAND BAGS MAY ALSO BE USED FOR THIS APPLICATION.
HAY BALES NOT ACCEPTABLE DURING THIS STAGE.

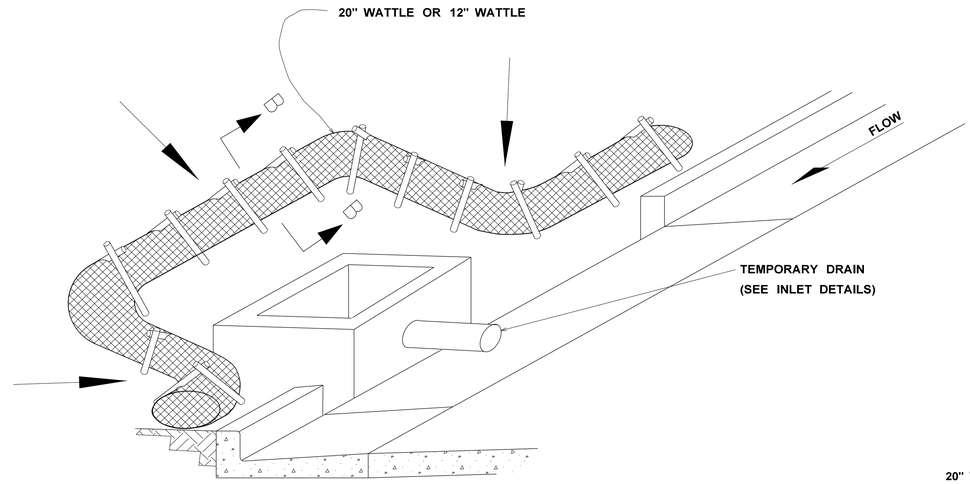


CURB INLET PROTECTION (STAGE 2)
SINGLE OR DOUBLE WING INLET

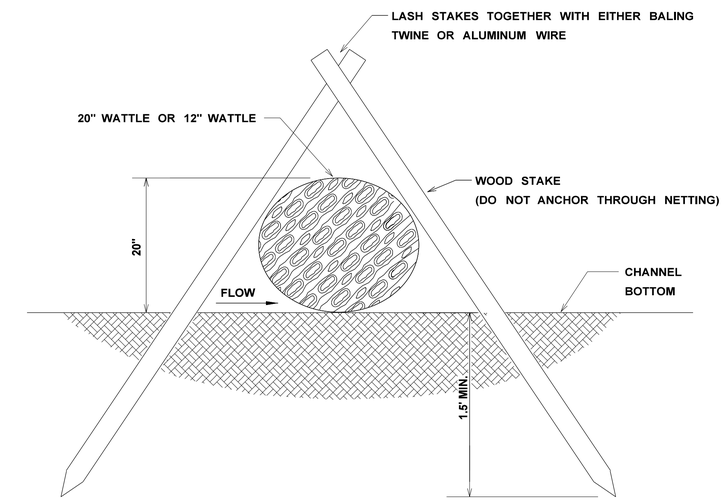


SECTION B-B

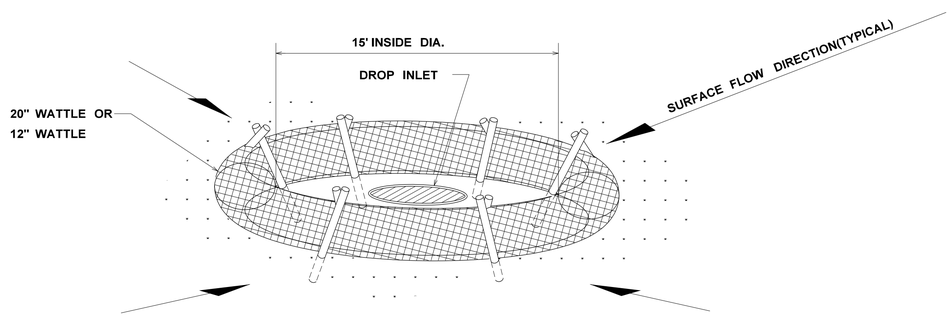


DROP INLET PROTECTION

NOTES:

1. ANCHORING STAKES SHALL BE SIZED, SPACED, AND BE OF A MATERIAL THAT EFFECTIVELY SECURES THE WATTLE. STAKE SPACING SHALL BE A MAXIMUM OF THREE FEET.
2. OVERLAP ENDS OF WATTLES PER MANUFACTURERS RECOMMENDATIONS (1'MIN.,3'MAX.).
3. TRENCHING OF WATTLES MAY BE NECESSARY IF PIPING BECOMES EVIDENT.
4. IN THE EVENT WATTLES CANNOT BE SECURED IN PLACE USING WOOD STAKES, SAND BAGS MAY BE USED IN LIEU OF WOOD STAKES IN ORDER TO SECURE WATTLES IN PLACE. IF SAND BAGS ARE USED IN THIS APPLICATION THEY WILL NOT BE A SEPERATE PAY ITEM.

| REVISION | BY | DATE |
|---|---|---|
| | | |

MISSISSIPPI DEPARTMENT OF TRANSPORTATION

**INLET PROTECTION DETAILS OF WATTLES**

COUNTY: PIKE
PROJ. NUM.: ER-0246-00(015)

WORKING NUMBER
ECD-13

FILENAME: ECD-13.DGN
DESIGN TEAM _____ CHECKED _____ DATE 9/29/15

SHEET NUMBER
25

FLN
ROADWAY DESIGN DIVISION
MISSISSIPPI DEPARTMENT OF TRANSPORTATION
8/16/2016 2:30:57 PM ECD-13.DGN

| STATE | PROJECT NO. |
|---|---|
| MISS. | ER-0246-00(015) |

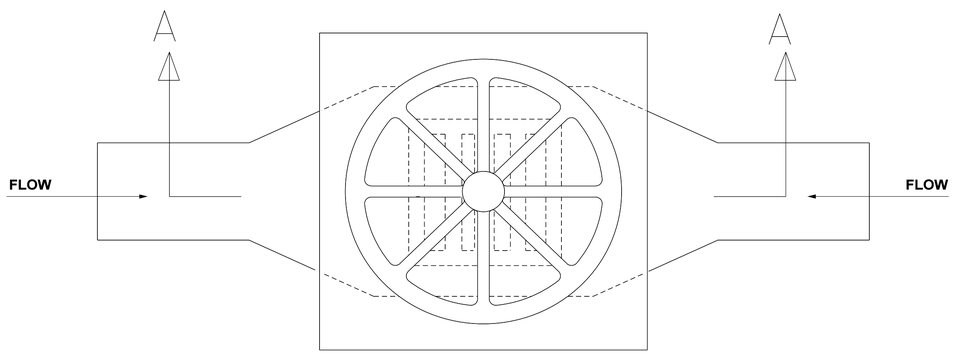


PLAN

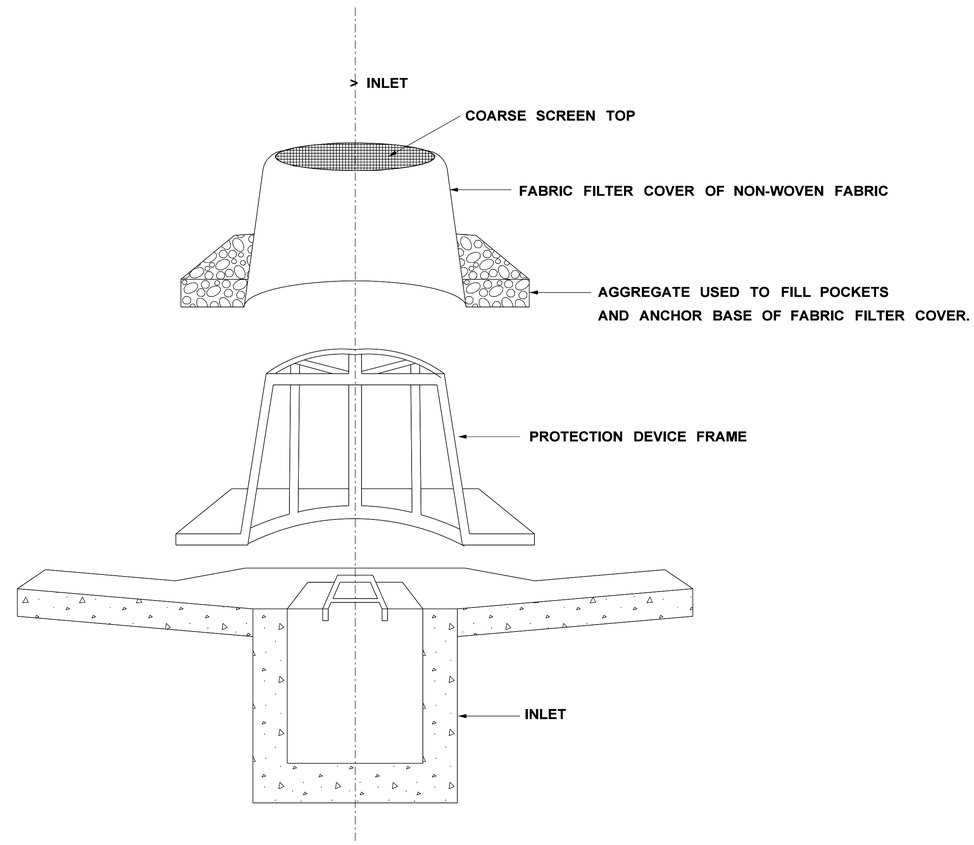


SECTION "A-A"

NOTES:

1. FRAMES WITH EITHER SQUARE OR CIRCULAR BASES MAY BE USED. SELECTED FRAME BASE SHOULD PROVIDE BEST SEAL AROUND INLET AS DIRECTED BY THE ENGINEER.
2. FILL POCKETS AROUND BASE OF FILTER COVER WITH #57 STONE OR SOIL. STONE IS REQUIRED WHEN ANCHORING THE MANUFACTURED INLET PROTECTION DEVICE OVER PAVED DITCH OR FLUME.
3. USE ONLY DURING STAGE 3 OR STAGE 4 INLET CONSTRUCTION.
4. FOR MEDIAN INLET PROTECTION, THE ELEVATION OF THE COARSE SCREEN TOP SHOULD BE A MINIMUM OF 6" BELOW THE ELEVATION OF THE OUTSIDE EDGE OF THE INSIDE SHOULDER.

MISSISSIPPI DEPARTMENT OF TRANSPORTATION

**INLET PROTECTION DETAILS OF MANUFACTURED INLET PROTECTION DEVICE**

COUNTY: PIKE

PROJ. NUM.: ER-0246-00(015)

WORKING NUMBER ECD-14

SHEET NUMBER 26

FILENAME: ECD-14.DGN

DESIGN TEAM ____ CHECKED ____ DATE 9/29/15

REVISION | BY | DATE

FLN
ROADWAY DESIGN DIVISION
MISSISSIPPI DEPARTMENT OF TRANSPORTATION

8/16/2016 2:30:59 PM ECD-14.DGN

| STATE | PROJECT NO. |
|---|---|
| MISS. | ER-0246-00(015) |

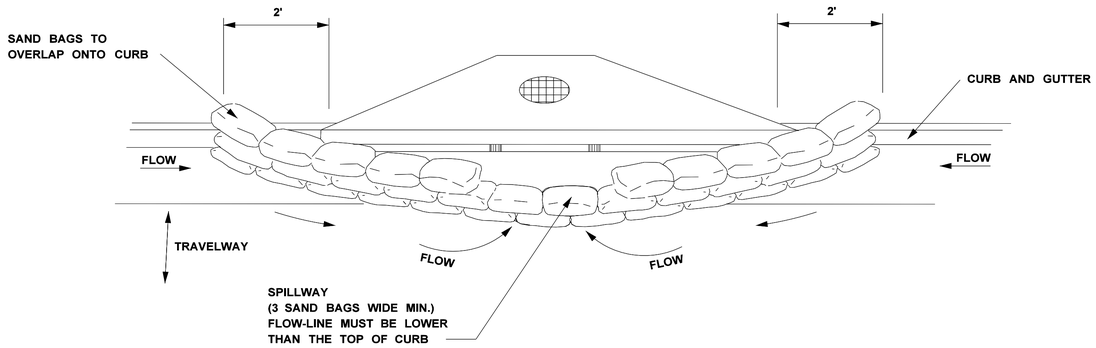


TYPICAL (SAND BAG) PROTECTION FOR INLET IN SAG

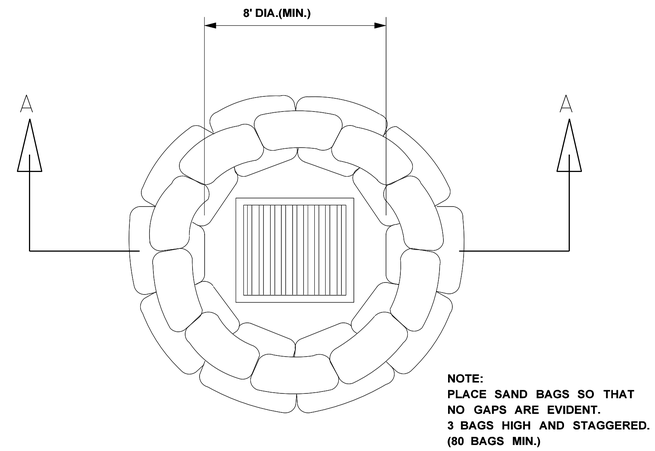


DROP INLET
PLAN VIEW

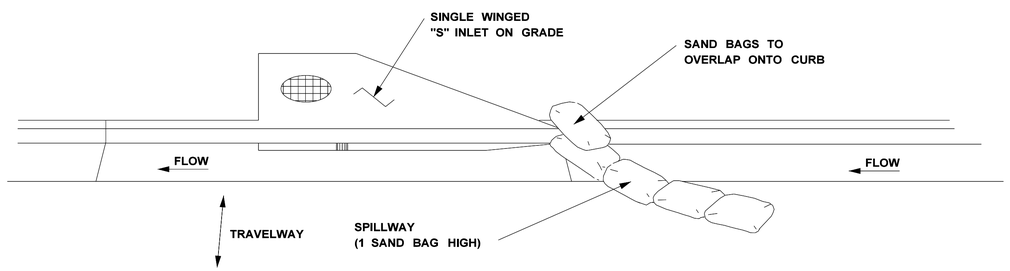


TYPICAL (SAND BAG) PROTECTION FOR INLET ON GRADE

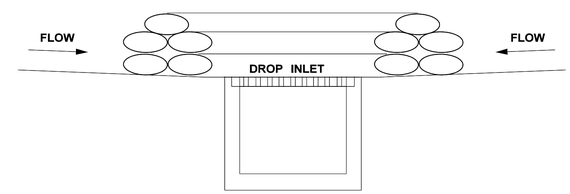


SECTION A-A
SAND BAG BARRIER

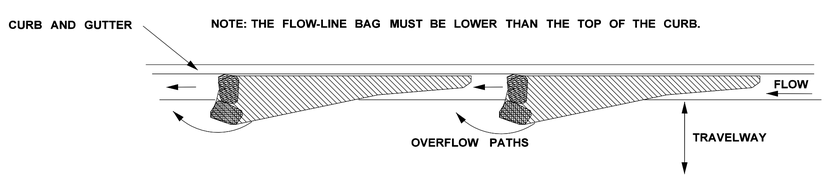


CURB AND GUTTER SEDIMENT
CONTAINMENT SYSTEM

CURB INLET PROTECTION NOTES:

1. THIS CURB INLET PROTECTION METHOD CAN BE USED DURING ANY STAGE OF BASE AND PAVEMENT CONSTRUCTION.
2. BAG HEIGHT AND NUMBER OF BAGS SHOULD BE BASED ON CURB HEIGHT AND USE OF TRAVELWAY.
3. SEDIMENT SHOULD BE CONTROLLED PRIOR TO ENTERING GUTTER. GUTTER CHECKS AND INLET PROTECTION ARE FOR SECONDARY CONTROL.
4. REMOVE ACCUMULATED SEDIMENT AFTER EVERY RAINFALL. SWEEP SEDIMENT FROM HARD SURFACES AND DISPOSE OF APPROPRIATELY AWAY FROM INLETS AND/OR WATER BODIES.
5. IF DENUDED AREAS EXIST BEHIND THE INLET, A SEDIMENT BARRIER SHOULD BE INSTALLED AROUND IT'S PERIMETER TO CONTROL SEDIMENT.

| DATE | REVISION | BY |
|---|---|---|
| | | |

MISSISSIPPI DEPARTMENT OF TRANSPORTATION

**INLET PROTECTION DETAILS OF SAND BAG**

COUNTY: PIKE
PROJ. NUM.: ER-0246-00(015)

FILENAME: ECD-15.DGN
DESIGN TEAM _____ CHECKED _____ DATE 9/29/15

WORKING NUMBER
ECD-15

SHEET NUMBER
27

PLAN
ROADWAY DESIGN DIVISION
MISSISSIPPI DEPARTMENT OF TRANSPORTATION
8/16/2016 2:31:01 P:\ECD-15.DGN

FMS CON: 107382/301000

| STATE | PROJECT NO. |
|---|---|
| MISS. | ER-0246-00(015) |

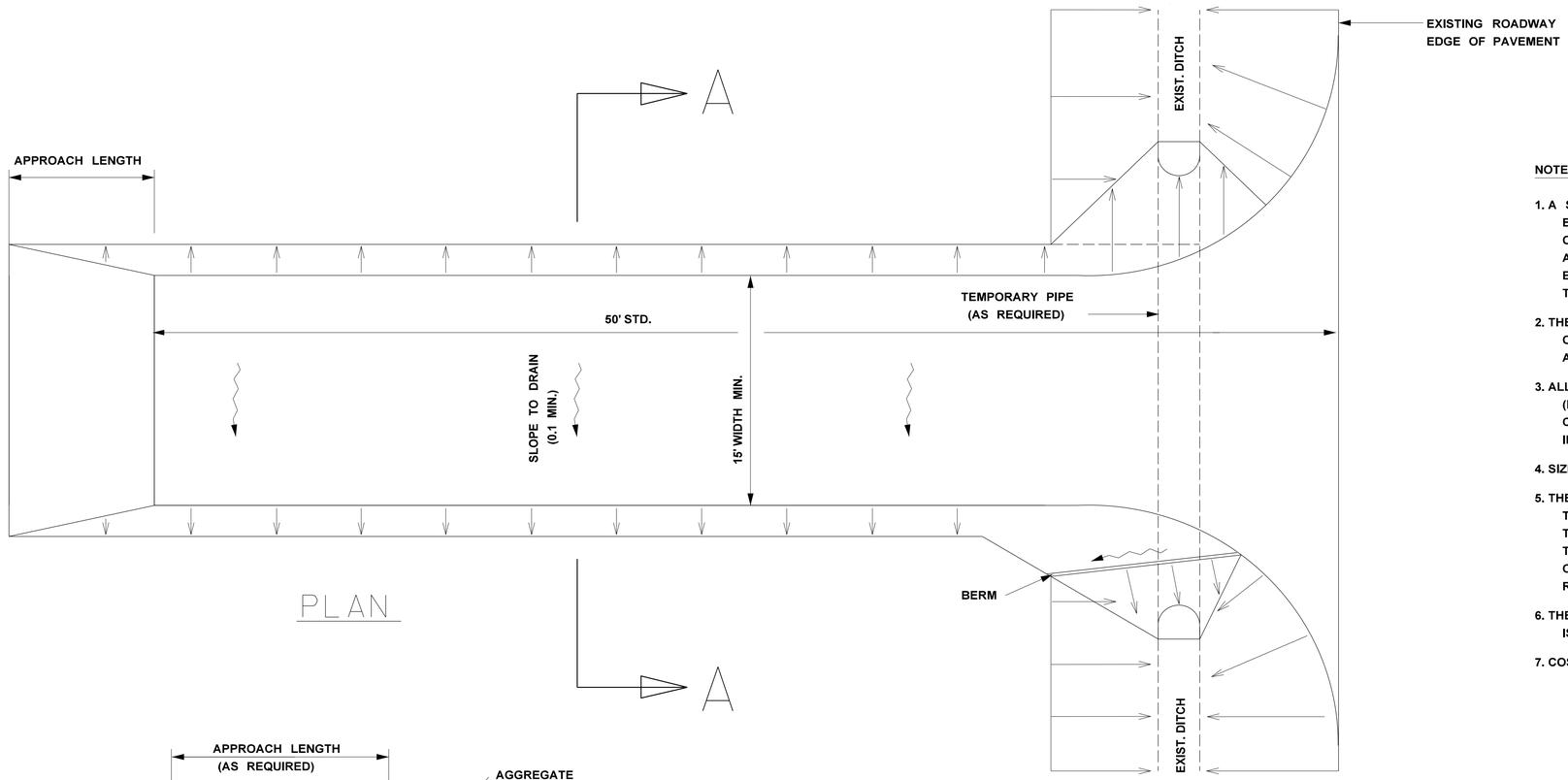


PLAN

NOTES:

1. A STABILIZED CONSTRUCTION ENTRANCE SHALL BE CONSTRUCTED AT POINTS OF EGRESS FROM UNSTABILIZED AREAS OF THE PROJECT TO PUBLIC ROADS WHERE OFFSITE TRACKING OF MUD COULD OCCUR. TRAFFIC FROM UNSTABILIZED AREAS OF THE PROJECT SHALL BE DIRECTED THRU THE STABILIZED ENTRANCE. BARRIERS, FLAGGING, OR OTHER POSITIVE MEANS SHALL BE USED AS REQUIRED TO LIMIT AND DIRECT VEHICULAR EGRESS ACROSS THE STABILIZED ENTRANCE.
2. THE CONTRACTOR MAY PROPOSE AN ALTERNATIVE TECHNIQUE TO MINIMIZE OFFSITE TRACKING OF SEDIMENT. THE ALTERNATIVE MUST BE REVIEWED AND APPROVED BY THE ENGINEER PRIOR TO ITS USE.
3. ALL MATERIALS SPILLED, DROPPED, OR TRACKED ONTO PUBLIC ROADS (INCLUDING THE STABILIZED CONSTRUCTION ENTRANCE AGGREGATE AND CONSTRUCTION MUD) SHALL BE REMOVED DAILY, OR MORE FREQUENTLY IF SO DIRECTED BY THE ENGINEER.
4. SIZE III STABILIZER AGGREGATE OR LARGER SHALL BE USED.
5. THE STABILIZED CONSTRUCTION ENTRANCE SHALL BE MAINTAINED IN A CONDITION THAT WILL ALLOW IT TO PERFORM IT'S FUNCTION TO PREVENT OFFSITE TRACKING, THE STABILIZED CONSTRUCTION ENTRANCE SHALL BE RINSED WHEN NECESSARY TO MOVE ACCUMULATED MUD DOWNWARD THRU THE STONE. ADDITIONAL STABILIZATION OF THE VEHICULAR ROUTE LEADING TO THE STABILIZED ENTRANCE MAY BE REQUIRED TO LIMIT THE MUD TRACKED.
6. THE NOMINAL SIZE OF A STANDARD STABILIZED CONSTRUCTION ENTRANCE IS 15' X 50' UNLESS OTHERWISE SHOWN IN THE EROSION CONTROL PLAN.
7. COSTS OF ALL ITEMS ON THIS SHEET ARE TO BE INCLUDED IN OTHER ITEMS BID.

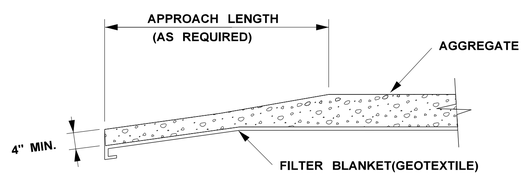


TRANSITION DETAIL

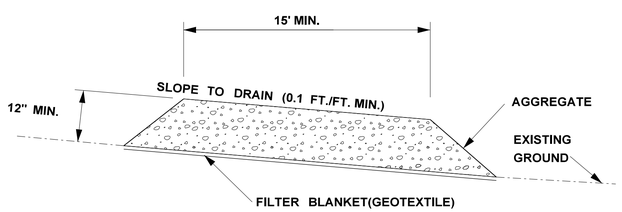


SECTION A-A

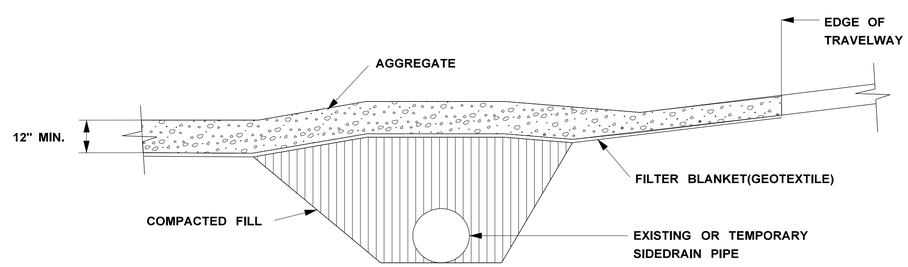


RURAL CONNECTION DETAIL

| DATE | REVISION | BY |
|---|---|---|

MISSISSIPPI DEPARTMENT OF TRANSPORTATION

**STABILIZED CONSTRUCTION ENTRANCE**

COUNTY: PIKE

PROJ. NUM.: ER-0246-00(015)

FILENAME: ECD-16.DGN

DESIGN TEAM _____ CHECKED _____ DATE 9/29/15

WORKING NUMBER ECD-16

SHEET NUMBER 28

PLAN
ROADWAY DESIGN DIVISION
MISSISSIPPI DEPARTMENT OF TRANSPORTATION

8/16/2016 2:31:03 P:\ECD-16.DGN

FMS CON: 107382/301000

| STATE | PROJECT NO. |
|---|---|
| MISS. | ER-0246-00(015) |

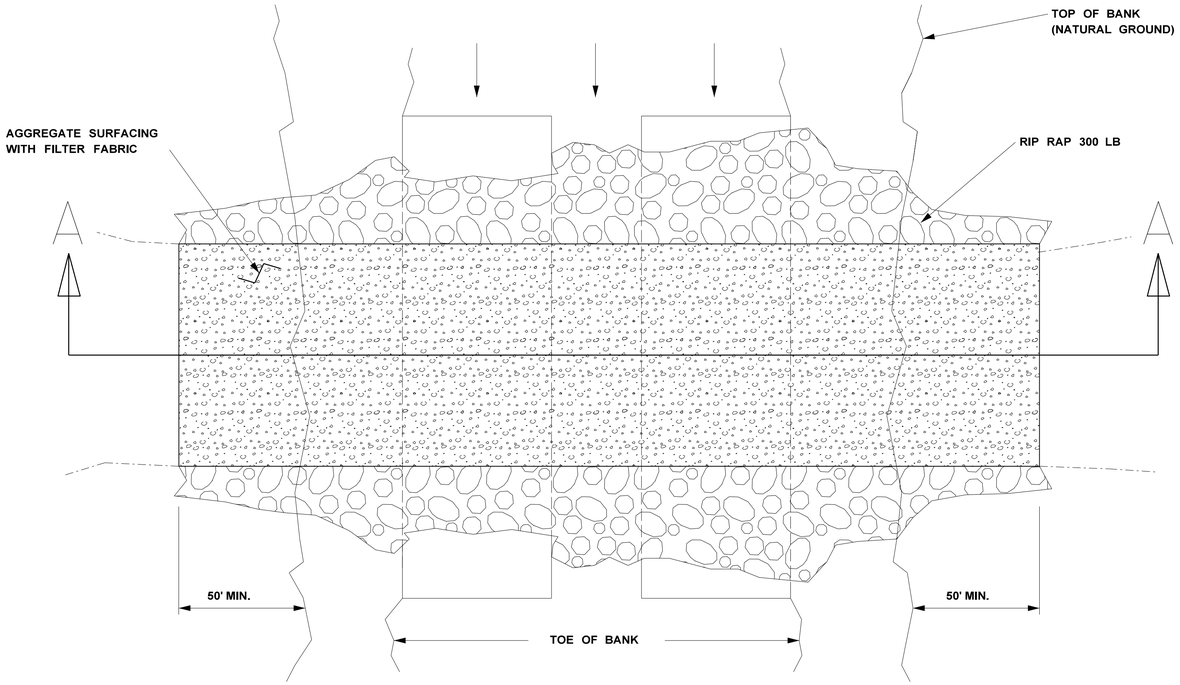


PLAN VIEW

TEMPORARY CULVERT STREAM CROSSING

NOTES:

1. TEMPORARY CULVERT STREAM CROSSINGS PROVIDE A MEANS FOR VEHICLES AND EQUIPMENT TO SAFELY CROSS A WATERCOURSE WHILE MINIMIZING DAMAGE TO THE CHANNEL AND/OR BANKS.

2. TEMPORARY CULVERT STREAM CROSSINGS, WHEN PERMITTED BY THE ENGINEER, SHALL BE CONSTRUCTED TO SAFELY PASS EXPECTED MEAN WATER FLOW OF THE STREAM FOR THE TIME OF YEAR AND LENGTH OF TIME THAT THEY ARE INSTALLED.

3. TEMPORARY STREAM CROSSINGS SHALL BE DESIGNED TO ENSURE STRUCTURAL INTEGRITY AND STABILITY, AND MAINTAIN NORMAL DOWNSTREAM FLOWS. THE USE OF INSTREAM CROSSINGS AND INSTREAM AGGREGATE FILL SHALL BE MINIMIZED TO THE EXTENT PRACTICABLE.

4. A CONTINUOUS PROGRAM OF EFFECTIVE EROSION AND SEDIMENT CONTROL MEASURES SHALL BE IMPLEMENTED PRIOR TO AND CONCURRENT WITH ANY TYPE OF CONSTRUCTION ACTIVITY WITHIN THE BANKS OF A STREAM. WHEN A CROSSING IS NO LONGER NEEDED, THE STREAMBED AND STREAM BANKS SHALL BE RESTORED TO PRE-DISTURBANCE CONDITIONS, OR SUCH A CONDITION THAT PROVIDES SUBSTANTIALLY EQUIVALENT PROTECTION OF WATER QUALITY.

5. LOCATIONS OR TYPES OF TEMPORARY CULVERT STREAM CROSSINGS WILL NOT BE SHOWN ON THE PLANS AS REQUIRED ITEMS .

6. THE CONTRACTOR MAY PROPOSE OTHER OPTIONS FOR TEMPORARY STREAM CROSSINGS SUCH AS STEEL/TIMBER BRIDGE OR MATS.

7. THE DETAILS PROVIDED DEPICT A TYPICAL TEMPORARY CULVERT STREAM CROSSING.

8. TEMPORARY STREAM CROSSINGS WILL NOT BE MEASURED FOR SEPERATE PAYMENT. ALL COSTS FOR MATERIALS, LABOR, EQUIPMENT, CONSTRUCTION, REMOVAL AND MAINTENANCE SHALL BE ABSORBED IN OTHER ITEMS OF WORK

TEMPORARY CULVERT STREAM CROSSING

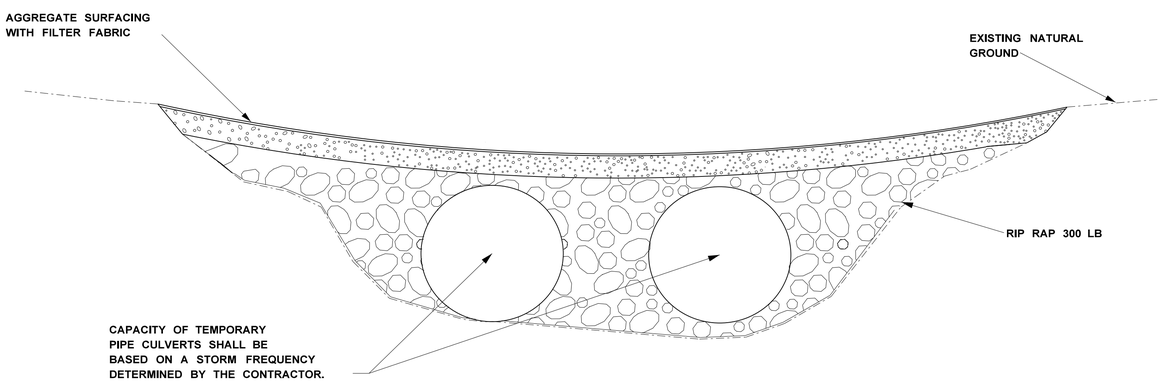


SECTION A-A

| DATE | REVISION | BY |
|---|---|---|
| | | |

MISSISSIPPI DEPARTMENT OF TRANSPORTATION

**TEMPORARY CULVERT STREAM CROSSING**

COUNTY: PIKE

PROJ. NUM.: ER-0246-00(015)

FILENAME: ECD-17.DGN

DESIGN TEAM _____ CHECKED _____ DATE 9/29/15

WORKING NUMBER ECD-17

SHEET NUMBER 29

PLAN
ROADWAY DESIGN DIVISION
MISSISSIPPI DEPARTMENT OF TRANSPORTATION

8/16/2016 2:31:05 PM ECD-17.DGN

FMS CON: 107382/301000

| STATE | PROJECT NO. |
|---|---|
| MISS. | ER-0246-00(015) |

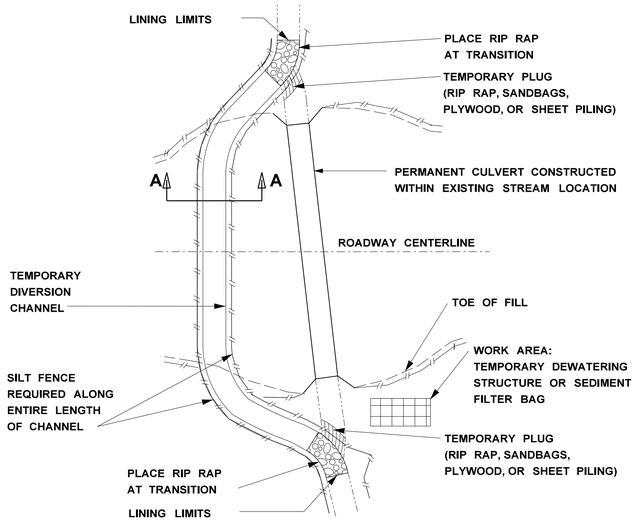


CULVERT CONSTRUCTED WITHIN EXISTING STREAM

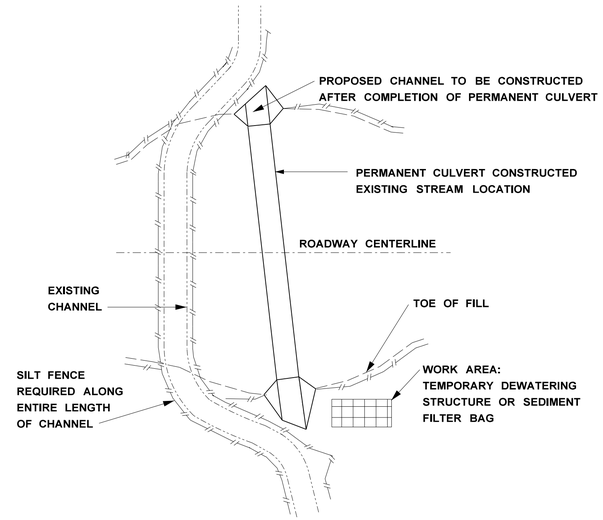


CULVERT CONSTRUCTED OUTSIDE EXISTING STREAM

NOTES:

1. TEMPORARY DIVERSION CHANNELS MAY BE USED TO DIVERT NORMAL STREAM PATH FLOW FROM AN ERODIBLE AREA UNTIL SUCH AREAS CAN BE STABILIZED.
2. TYPE III FILTER FABRIC OR PRE-FAB DITCH LINER MAY BE USED FOR CHANNEL LINING.
3. RIP-RAP WITH FILTER FABRIC MAY BE USED FOR CHANNEL FLOW VELOCITIES OF 3.0 FPS TO 9.0 FPS. THE RIP-RAP SHALL BE SIZED 300 LB
4. LOCATIONS OR TYPES OF TEMPORARY DIVERSION WILL NOT BE SHOWN ON THE PLANS
5. DIVERSION CHANNEL SHALL BE STABILIZED AND INSPECTED BY THE ENGINEER BEFORE FLOW IS DIVERTED.
6. DURING CONSTRUCTION OF DIVERSION CHANNEL, DAMAGE TO THE EXISTING STREAM, CANOPY REMOVAL, AND DEPTH OF THE CHANNEL CONSTRUCTION SHALL BE MINIMIZED.
7. CONSTRUCTION OF THE CHANNEL RELOCATIONS AND CULVERTS SHALL PROCEED AS FOLLOWS: 7.1.CONSTRUCT A MEANDERING TEMPORARY CHANNEL CHANGE ADJACENT TO THE PROPOSED CULVERT TO DIVERT WATER TEMPORARILY DURING THE CULVERT CONSTRUCTION. TEMPORARY EROSION CONTROL MEASURES SHALL BE INSTALLED IN ACCORDANCE WITH THE STANDARD SPECIFICATIONS.
   - 7.2. RELOCATE CHANNEL AND CONSTRUCT CULVERT SIMULTANEOUSLY.
   - 7.3. SOD AND/OR RIP-RAP RECONSTRUCTED BANKS AT TRANSITIONS. THE UPPER CHANNEL PLUG IS TO REMAIN IN PLACE UNTIL SUBNOTE (7.1) THROUGH (7.4) UNDER THIS HEADING ARE COMPLETED TO INSURE THAT ALL CONSTRUCTION IS IN THE DRY.
   - 7.4. IF AN EARTH PLUG IS NECESSARY AT THE DOWNSTREAM END OF THE CHANNEL IT SHOULD BE REMOVED FIRST, THEN REMOVE THE UPPER PLUG TO RELEASE WATER INTO THE RECONSTRUCTED CHANNEL.
   - 7.5 PLUGS SHOULD REMAIN IN PLACE UNTIL PERMANENT STABILIZATION OF THE NEW WATER COURSE IS COMPLETED. REMOVAL OF PLUGS SHOULD ONLY BE PERFORMED FOLLOWING ACCEPTANCE OF ALL STABILIZATION WORK BY THE ENGINEER.
8. THE DETAILS PROVIDED DEPICT TYPICAL TEMPORARY DIVERSION CHANNELS.
9. THE CONTRACTOR MAY PROPOSE THE USE OF OTHER DIVERSION OPTIONS SUCH AS PIPING, PUMPING OR STAGED CONSTRUCTION.
10. THE EFFECTIVE AREA OF FLOW IN THE TEMPORARY CHANNEL OR CULVERT SHALL BE AT LEAST ONE-HALF THAT OF THE EXISTING STRUCTURE.
11. INSTALLATION OF FILTER FABRIC SHALL BEGIN AT THE DOWNSTREAM END AND PROGRESSING UPSTREAM. EDGES OF ADJACENT FILTER FABRIC SHALL OVERLAP AT LEAST 1 FT. THE ENDS OF THE FILTER FABRIC SHALL BE SECURELY HELD IN PLACE WITH RIPRAP.
12. THE COST OF THE TEMPORARY DEWATERING STRUCTURE OR SEDIMENT FILTER BAG SHALL BE INCLUDED IN OTHER ITEMS BID.

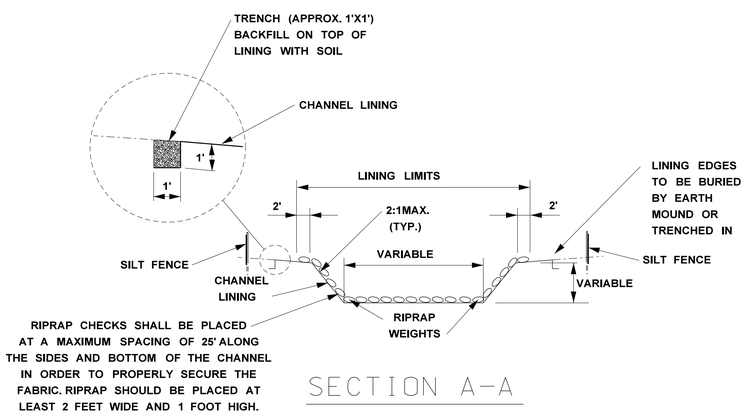


SECTION A-A

TEMPORARY DIVERSION CHANNEL WITH GEOTEXTILE FABRIC

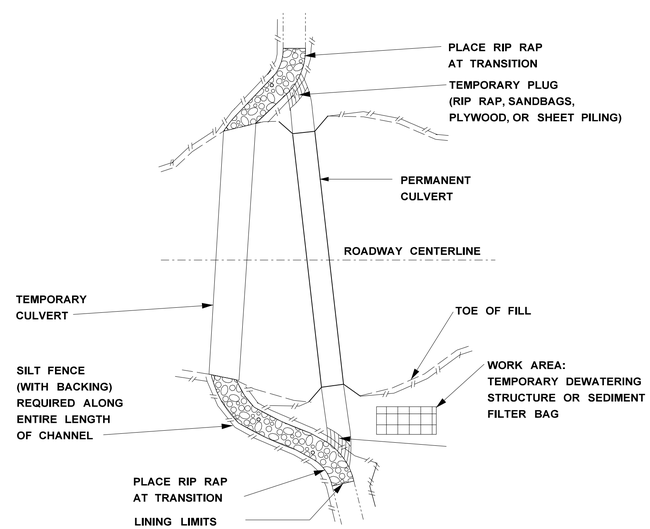


TEMPORARY CULVERT USED DURING CONSTRUCTION

| DATE | BY | REVISION |
|---|---|---|
| | | |

MISSISSIPPI DEPARTMENT OF TRANSPORTATION

**TEMPORARY STREAM DIVERSION**

COUNTY: PIKE

PROJ. NUM.: ER-2146-00(015)

FILENAME: ECD-18.DGN

DESIGN TEAM _____ CHECKED _____ DATE 9/29/15

WORKING NUMBER ECD-18

SHEET NUMBER 30

PLAN
ROADWAY DESIGN DIVISION
MISSISSIPPI DEPARTMENT OF TRANSPORTATION

8/16/2016 2:31:08 PM ECD-18.DGN

| STATE | PROJECT NO. |
|---|---|
| MISS. | ER-0246-00(015) |

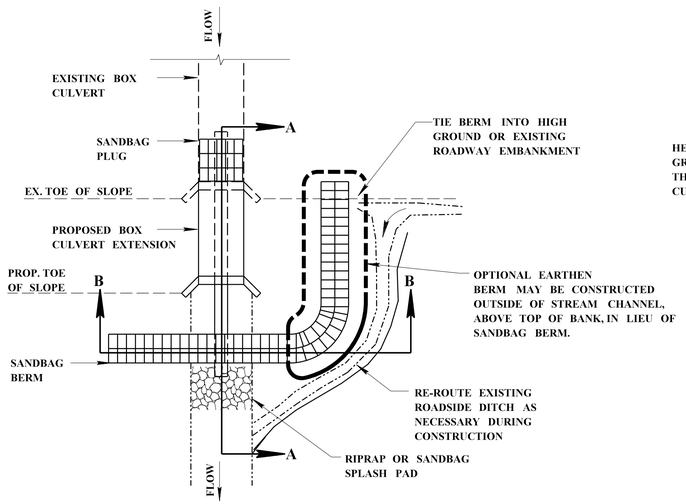


## PLAN VIEW

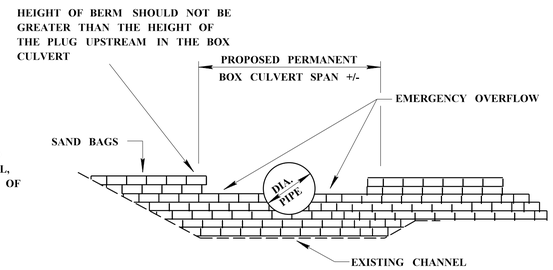


## SECTION B-B

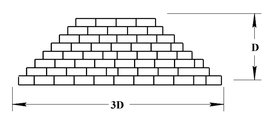


## SAND BAG PLUG & BERM CROSS SECTION

(SEE NOTE 4)

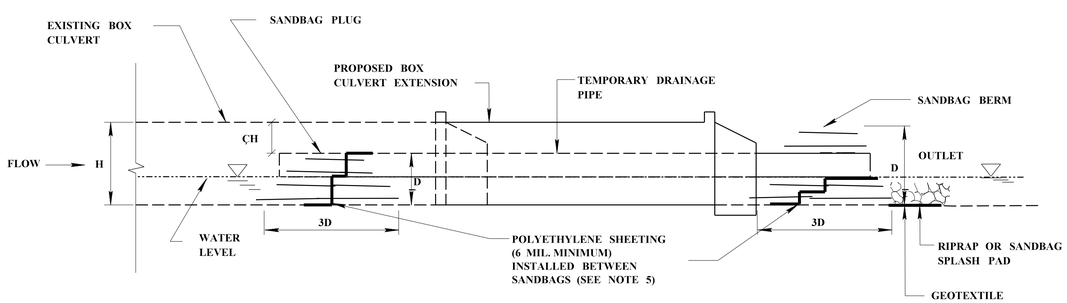


## SECTION A-A

### MAXIMUM SPAN FOR PIPE SUPPORTS, FEET

| DIAMETER OF PIPE (IN.) | STEEL THICKNESS (IN.) | | | | |
|---|---|---|---|---|---|
| | 0.064 | 0.079 | 0.109 | 0.138 | 0.168 |
| | 2" x 1/2" CORRUGATION | | | | |
| 24 | 13 | 15 | 20 | | |
| 36 | 12 | 15 | 20 | 25 | |
| 48 | 11 | 14 | 19 | 25 | 30 |
| 60 | | 14 | 19 | 24 | 29 |
| 72 | | | 18 | 24 | 29 |
| | 5" X 1" OR 3" X 1" CORRUGATION | | | | |
| 36 | 9 | 11 | | | |
| 48 | 9 | 11 | 15 | | |
| 60 | 8 | 10 | 14 | 18 | |
| 72 | 8 | 10 | 14 | 18 | 22 |

FOR PIPE SIZES NOT SHOWN REFER TO NEXT LARGER SIZE

## GENERAL NOTES

1 SUSPENDED PIPE DIVERSIONS MAY BE USED TO ALLOW BOX CULVERT EXTENSIONS TO BE CONSTRUCTED, WHILE SEPARATED FROM FLOWING WATER, THUS REDUCING SEDIMENTATION. OPTIONAL FLEXIBLE PIPE DIVERSION MAY BE UTILIZED ON STREAMS WITH INTERMITTENT FLOW WHERE THE DURATION OF CONSTRUCTION IS EXPECTED TO BE BRIEF.

2 EXCAVATION SLOPES FOR BOX CULVERT EXTENSIONS SHALL BE PROTECTED WITH TYPE III FILTER FABRIC PRIOR TO CONSTRUCTION OF THE BOX.

3 SUSPENDED PIPE DIVERSIONS MAY BE USED WHERE ADVERSE IMPACTS WILL NOT BE CAUSED BY WATER PONDED UPSTREAM OF THE PIPE.

4 THE SANDBAG PLUG AT THE UPSTREAM END OF THE SUSPENDED PIPE DIVERSION SHOULD BE CONSTRUCTED TO A HEIGHT EQUAL TO THREE QUARTERS OF THE RISE OF THE BOX CULVERT.

5 POLYETHYLENE SHEETING (6 MIL. MINIMUM) SHALL BE PLACED INSIDE THE SANDBAG PLUG IN THE BOX CULVERT AND IN THE SAND BAG BERM WITHIN THE CHANNEL IN ORDER TO PROVIDE THE BEST POSSIBLE SEAL. SANDBAGS ON THE DOWNSTREAM SIDE OF THE SHEETING SHOULD BE PLACED FIRST, AND THEN SHEETING PLACED ON THESE BAGS. AS MUCH AS POSSIBLE, THE SHEETING SHOULD BE FITTED AROUND THE PIPE. THE REMAINING SANDBAGS WOULD THEN BE PLACED ON THE SHEETING. WHERE MULTIPLE SHEETS ARE USED, THEY SHOULD OVERLAP A MINIMUM OF 18 INCHES.

6 THE PROPOSED CULVERT CONSTRUCTION SHALL BE SEALED FROM THE EXISTING STREAM BY MEANS OF A SANDBAG BERM WHICH SHOULD BE AT THE SAME HEIGHT AS THE PLUG INSIDE THE BOX CULVERT. THIS BERM SHALL BE TIED INTO EITHER HIGH GROUND ADJACENT TO THE CHANNEL OR THE EXISTING ROADWAY EMBANKMENT. IT SHALL BE PROVIDED WITH A SPILLWAY EQUAL IN WIDTH TO THE BOX CULVERT AND AT A HEIGHT LOWER THAN THE REST OF THE BERM.

7 THE TEMPORARY DRAINAGE PIPE SHALL BE SUPPORTED AT ALL JOINTS AND AT INTERVALS NOT TO EXCEED MAXIMUM VALUES SPECIFIED IN THE TABLE "MINIMUM SPAN FOR SUPPORTS." SUPPORTS MAY CONSIST OF SANDBAGS, CONCRETE BLOCKS, WOODEN FRAMES, OR ANY OTHER MATERIAL SUFFICIENT TO SUPPORT THE WEIGHT OF THE PIPE WHEN IT IS FLOWING FULL. SUPPORTS AT JOINTS SHALL BE A MINIMUM OF 18 INCHES IN LENGTH, ALONG THE TEMPORARY DRAINAGE PIPE AND CENTERED ON THE JOINT. SUPPORTS SHOULD "CRADLE" THE TEMPORARY DRAINAGE PIPE TO ENSURE THAT IT WILL NOT ROLL DURING CONSTRUCTION OF THE BOX CULVERT.

8 ALL PIPE JOINTS SHALL BE PROPERLY BANDED OR OTHERWISE PROVIDED WITH A REASONABLE SEAL AGAINST LEAKAGE.

9 THE OPTIONAL FLEXIBLE PIPE DIVERSION USING PUMPS MAY BE USED AS AN ALTERNATE FOR SUSPENDED PIPE DIVERSIONS (UPSTREAM AND DOWNSTREAM).

10 CONSTRUCTION SHALL PROCEED AS FOLLOWS:
- 10A. INSTALL TEMPORARY DRAINAGE PIPE ON ITS SUPPORTS INSIDE THE CULVERT TO BE EXTENDED.
- 10B. CONSTRUCT THE SANDBAG PLUG AT THE UPSTREAM END OF THE SUSPENDED PIPE DIVERSION.
- 10C. CONSTRUCT THE SANDBAG BERM AT THE DOWNSTREAM END OF THE SUSPENDED PIPE DIVERSION.
- 10D. ONCE THE BOX CULVERT EXTENSION HAS BEEN COMPLETED, REMOVE THE DOWNSTREAM SANDBAG STRUCTURE, EXCEPT FOR THOSE BAGS NEEDED TO SUPPORT THE END OF THE PIPE. THE UPSTREAM SANDBAG STRUCTURE SHOULD THEN BE REMOVED GRADUALLY, IN ORDER TO ALLOW THE UPSTREAM WATER LEVEL TO DRAW DOWN AT A SAFE RATE.
- 10E. REMOVE THE TEMPORARY DRAINAGE PIPE, SUPPORTS AND ANY REMAINING SANDBAGS.

11 TEMPORARY DRAINAGE PIPE, SANDBAG PLUGS, BERMS, AND SUPPORTS SHALL BE INSPECTED WEEKLY OR AFTER EVERY RAIN EVENT. ANY NEEDED REPAIRS SHALL BE DONE IMMEDIATELY. ANY DEBRIS WHICH HAS ACCUMULATED AT THE INLET OF THE SUSPENDED PIPE DIVERSION SHALL BE IMMEDIATELY REMOVED.

12 RIP RAP MAY BE SUBSTITUTED FOR SAND BAGS

| DATE | REVISION | BY |
|---|---|---|

MISSISSIPPI DEPARTMENT OF TRANSPORTATION

**TEMPORARY STREAM DIVERSION (BOX EXTENSIONS)**

COUNTY: PIKE

PROJ. NUM.: ER-0246-00(015)

FILENAME: ECD-19.DGN

DESIGN TEAM _____ CHECKED _____ DATE 9/29/15

WORKING NUMBER ECD-19

SHEET NUMBER 31

PLAN
ROADWAY DESIGN DIVISION
MISSISSIPPI DEPARTMENT OF TRANSPORTATION

8/16/2016 2:31:10 P:\ECD-19.DGN

| STATE | PROJECT NO. |
|---|---|
| MISS. | ER-0246-00(015) |

## FLOATING TURBIDITY CURTAIN

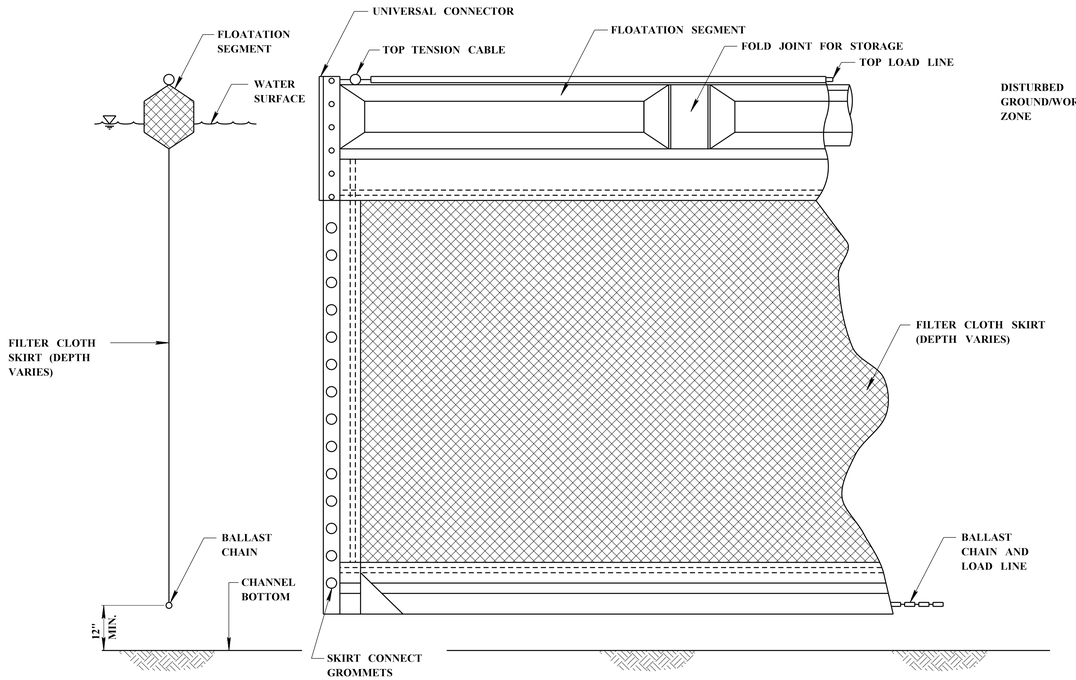


## TYPICAL ANCHORING PLAN FOR SHORELINE/RIVER EDGE WORK

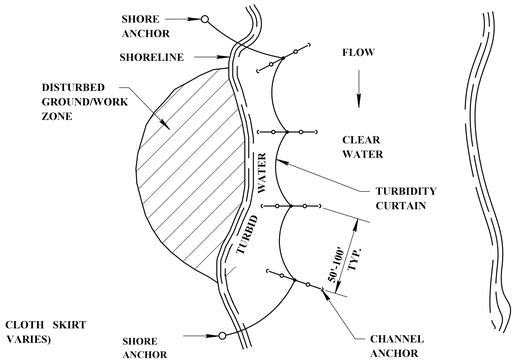


PLAN VIEW

## TYPICAL ANCHORING PLAN FOR MID CHANNEL WORK (BRIDGE PIER, CAISSON, ETC.)

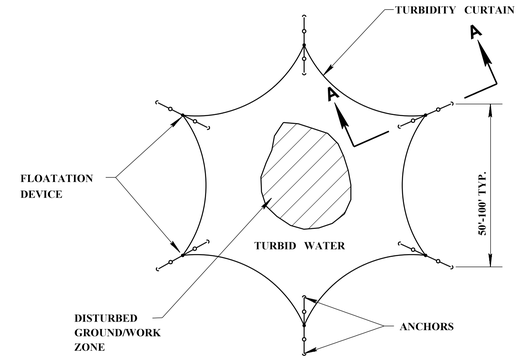


PLAN VIEW

## TYPICAL ANCHORING SECTION

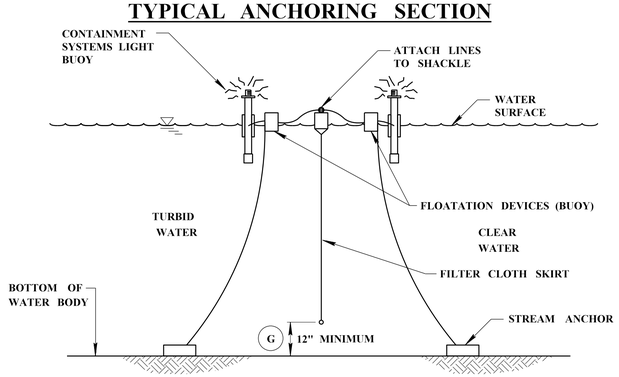


## SECTION A-A

AUTOMATIC FLASHING LIGHT BUOY (ON AT DUSK-OFF AT DAWN) 100' ON CENTER SHALL BE USED IN NAVIGABLE CHANNELS ONLY

EROSION CONTROL PLAN LEGEND: FLOATING TURBIDITY CURTAIN

## FLOATING TURBIDITY CURTAIN GENERAL NOTES

(A) FLOATING TURBIDITY CURTAINS (ALSO KNOWN AS TURBIDITY BARRIERS OR SILT CURTAINS) CREATE A BARRIER TO PREVENT TURBID WATER FROM ENTERING CLEAR WATER. FLOATING TURBIDITY CURTAINS SHOULD BE USED TO ISOLATE ACTIVE CONSTRUCTION AREAS WITHIN OR ADJACENT TO A BODY OF WATER TO MINIMIZE THE MIGRATION OF SILT LADEN WATER OUT OF THE CONSTRUCTION ZONE.

(B) TURBIDITY CURTAINS SHALL NOT BE INSTALLED PERPENDICULAR ACROSS THE MAIN FLOW OF A SIGNIFICANT BODY OF MOVING WATER.

(C) FLOATING TURBIDITY CURTAINS SHALL NO BE USED WHERE THE ANTICIPATED FLOW VELOCITIES WILL EXCEED 5 FT/SEC.

(D) TURBIDITY CURTAINS SHALL BE ANCHORED TO PREVENT DRIFT SHOREWARD OR DOWNSTREAM. ANCHORAGE SHALL BE INSTALLED ON BOTH SHORE AND STREAM SIDE. CURTAINS SHALL BE INSTALLED AS CLOSE TO PROJECT SITE AS POSSIBLE. BARRIERS SHOULD BE A BRIGHT COLOR (YELLOW OR "INTERNATIONAL" ORANGE ARE RECOMMENDED) THAT WILL ATTRACT THE ATTENTION OF NEARBY BOATERS.

(E) SHORE ANCHORS SHALL CONSIST OF A POST WITH DEADMAN OR APPROVED EQUAL. STREAM ANCHORS SHALL BE OF SUFFICIENT SIZE TO STABILIZE THE BARRIER WITH NUMBER AND SPACING DEPENDENT ON WATERWAY VELOCITIES AND MANUFACTURER'S RECOMMENDATIONS.

(F) IN SHALLOW WATER (2 FEET OF DEPTH OR LESS) A TURBIDITY CURTAIN MAY BE INSTALLED ON STAKES DRIVEN INTO THE BED OF THE WATER BODY.

(G) FABRIC SECTIONS SHALL BE CONNECTED END TO END WITH MINIMUM Ü" DIAMETER POLYPROPYLENE ROPE. FABRIC SHALL BE SEAMED TOGETHER IN A MANNER THAT RETAINS THE OVERALL TENSILE STRENGTH.

(H) DESIGN OF CURTAIN AND ANCHORAGE SHALL BE IN ACCORDANCE WITH MANUFACTURER'S RECOMMENDATIONS. FILTER CLOTH SKIRT SHOULD BE ABLE TO WITHSTAND THE FORCES IMPARTED ON IT DUE TO THE EXPECTED WIND VELOCITY OR STREAM VELOCITY. FABRIC SHALL BE MADE OF A NON-DETERIORATING MATERIAL, SUCH AS PLASTIC OR NYLON, WHICH WILL ALLOW WATER TO PASS THROUGH WHILE STILL RETAINING SEDIMENT.

(I) THE TURBIDITY CURTAIN AND ADJACENT WORK AREAS SHALL NOT BE DISTURBED 12 HOURS PRIOR TO REMOVAL FROM WATER BODY. MAINTENANCE SHALL BE PERFORMED AS NEEDED. CONTRACTOR SHALL REMOVE THE CURTAIN AT COMPLETION OF WORK IN A MANNER THAT WILL PREVENT SILTATION OF THE WATERWAY. DURING REMOVAL, EXTREME CARE SHOULD BE TAKEN NOT TO DISTURB ANY SEDIMENT DEPOSITS.

(J) MAINTAIN 12" MINIMUM GAP BETWEEN SKIRT BOTTOM AND CHANNEL BOTTOM TO PREVENT ACCUMULATED SEDIMENT FROM PULLING TOP OF CURTAIN BELOW WATER SURFACE.

(K) IN WIND OR WAVE ACTION SITUATIONS, THE MAXIMUM DEPTH OF THE CURTAIN SHALL BE 12 FEET.

(L) CONCENTRATED FLOWS SHALL NOT DISCHARGE BEYOND FLOATING TURBIDITY CURTAIN. CURTAINS ARE NOT TO BE INSTALLED ACROSS FLOWING BODY OF WATER.

(M) WHEN INSTALLED IN A NAVIGABLE WATERWAY, BUOYS SHOULD BE LIT ACCORDING TO REGULATORY AGENCY STANDARDS.

(N) WHEN ESTIMATING THE LENGTH OF TURBIDITY CURTAIN, ALLOW 10 TO 20 PERCENT VARIANCE IN STRAIGHT LINE MEASUREMENT.

(O) PAYMENT FOR FLOATING TURBIDITY CURTAIN SHALL INCLUDE ALL MATERIAL AND LABOR NECESSARY FOR CONSTRUCTION, MAINTENANCE, AND REMOVAL OF TURBIDITY CURTAINS

(P) ONLY FLOATING TURBIDITY CURTAINS LISTED ON THE APPROVED PRODUCTS LIST MAY BE USED.

| DATE | REVISION | BY |
|---|---|---|
| | | |

MISSISSIPPI DEPARTMENT OF TRANSPORTATION

**FLOATING TURBIDITY CURTAIN**

COUNTY: PIKE

PROJ. NUM.: ER-0246-00(015)

FILENAME: ECD-20.DGN

DESIGN TEAM _____ CHECKED _____ DATE 9/29/15

WORKING NUMBER ECD-20

SHEET NUMBER 32

PLAN
ROADWAY DESIGN DIVISION
MISSISSIPPI DEPARTMENT OF TRANSPORTATION

8/16/2016 2:31:12 PM ECD-20.DGN

FMS CON:

| STATE | PROJECT NO. |
|---|---|
| MISS. | |

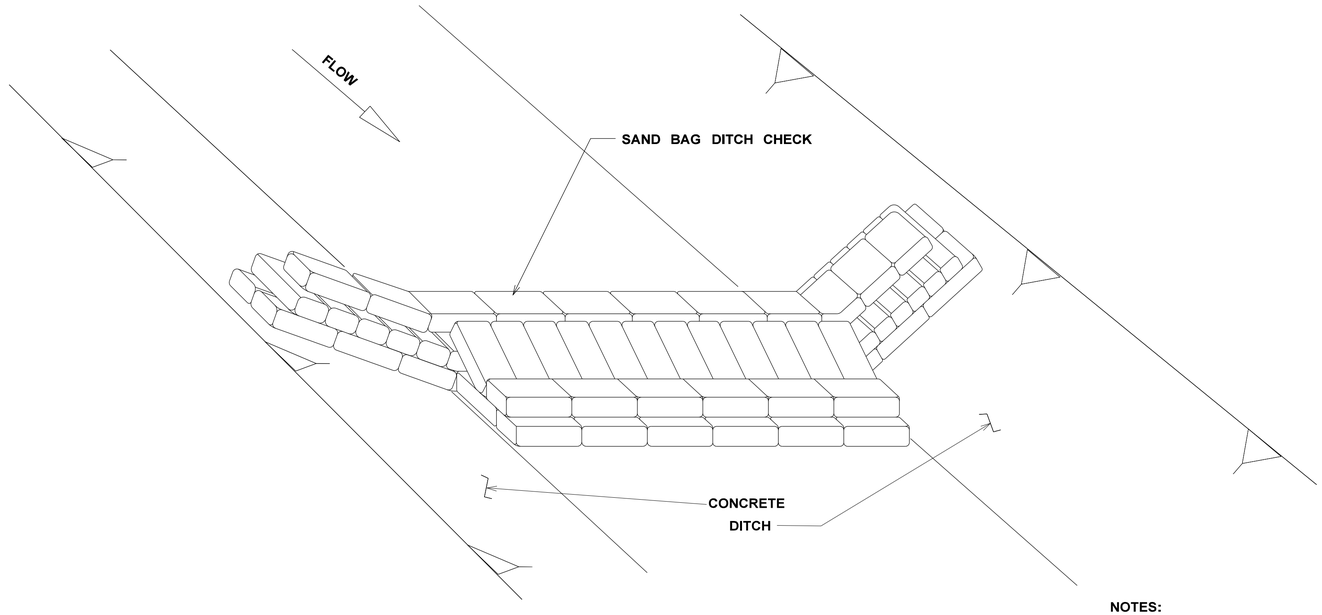


DETAIL (DITCH CHECK)

NOTES:

1. MINIMUM RECOMMENDED PLACEMENT INTERVAL BETWEEN SAND BAG DITCH CHECK IS 100' UNLESS SHOWN OTHERWISE ON THE PLANS OR APPROVED BY THE ENGINEER. SEE SPACING GUIDANCE ON ECD-4.

2. PREVENTING SEDIMENT FROM ENTERING A PAVED DITCH IS PREFERABLE TO CAPTURING SEDIMENT WITHIN PAVED DITCH.

## SAND BAG DITCH CHECK SELECTION GUIDELINES

SAND BAG DITCH CHECKS ARE USED FOR VELOCITY REDUCTION AND MINIMAL SEDIMENT TRAPPING IN CONCRETE PAVED DITCHES OR IN DITCHES THAT HAVE ROCKY BOTTOMS.

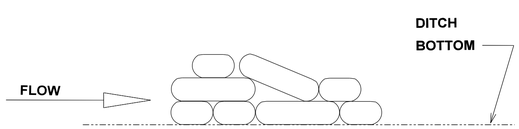


SIDE VIEW
(IN DITCH BOTTOM)

NOTE: END POINTS "A" MUST BE HIGHER THAN FLOWLINE POINT "B"

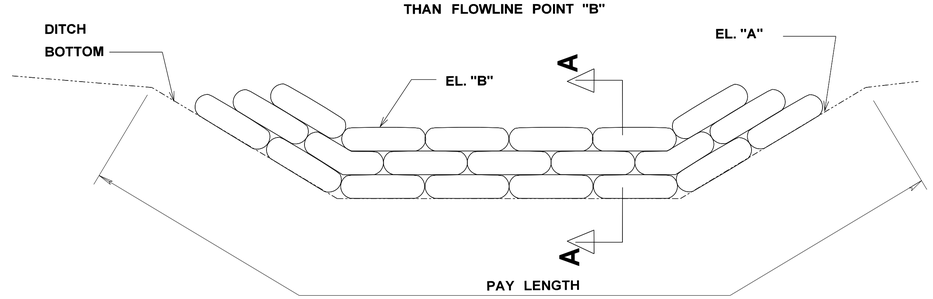


ELEVATION DETAIL

| | | | | | |
|---|---|---|---|---|---|
| | | | | BY | MISSISSIPPI DEPARTMENT OF TRANSPORTATION |
| | | | | REVISION | DETAILS OF EROSION CONTROL SANDBAG DITCH CHECK |
| | | | | | COUNTY: |
| | | | | | PROJ. NUM.: |
| | | | | DATE | FILENAME: ECD-21.DGN |
| | | | | | DESIGN TEAM ____ CHECKED ____ DATE 9/29/15 |

WORKING NUMBER ECD-21

SHEET NUMBER 33

PLAN
ROADWAY DESIGN DIVISION
MISSISSIPPI DEPARTMENT OF TRANSPORTATION

8/16/2016 2:31:15 P:\ECD-21.DGN

FMS CON:

| STATE | PROJECT NO. |
|---|---|
| MISS. | |

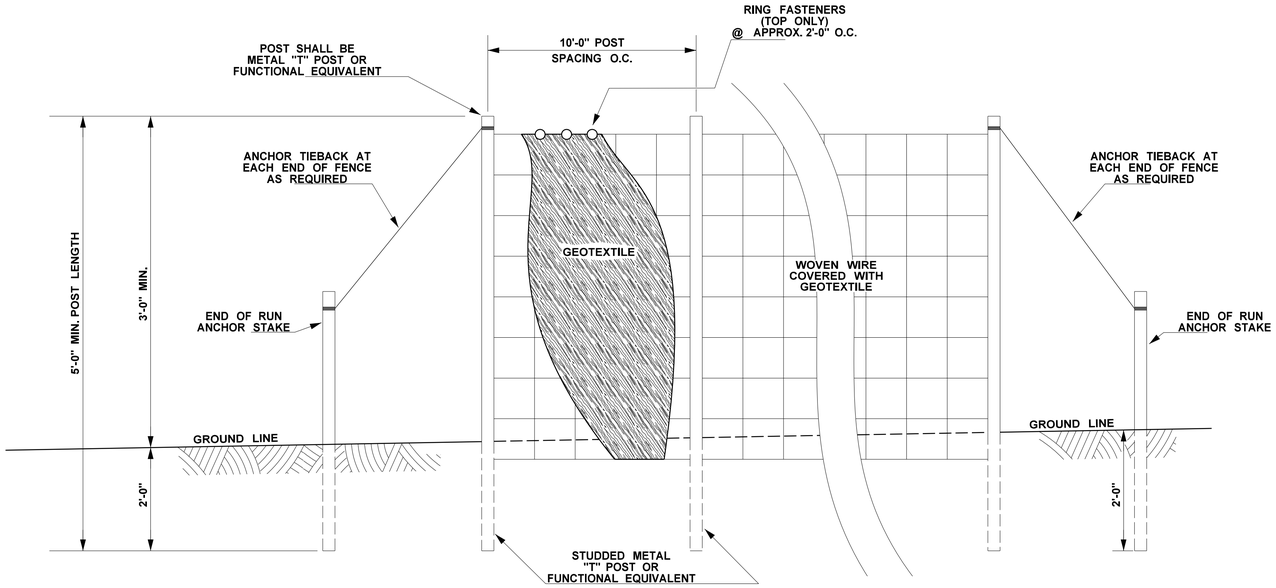


# ELEVATION VIEW

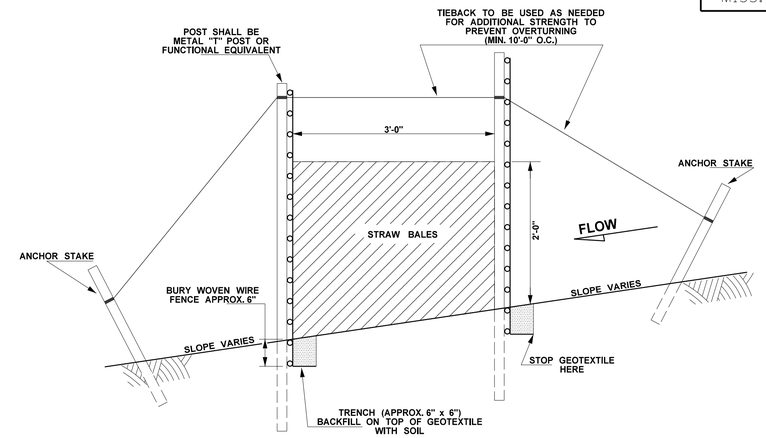


# SIDE VIEW SECTION A-A METHOD I

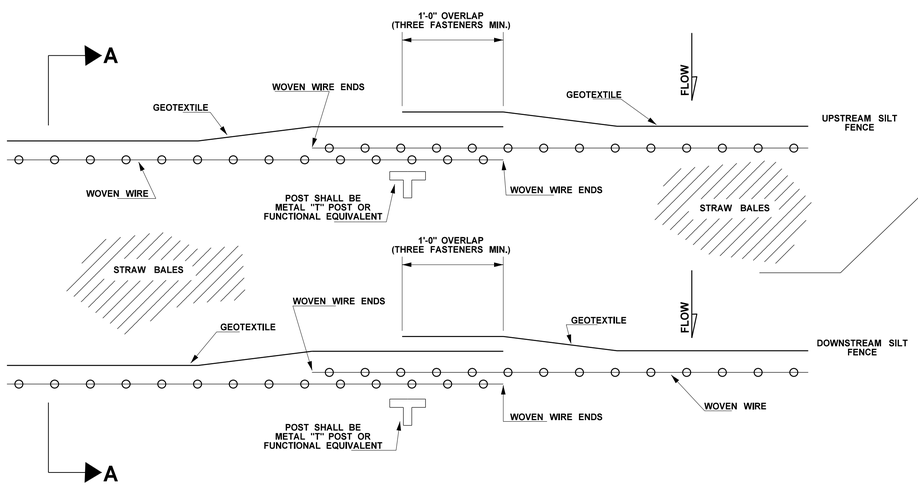


# PLAN VIEW REQUIRED LAPPING

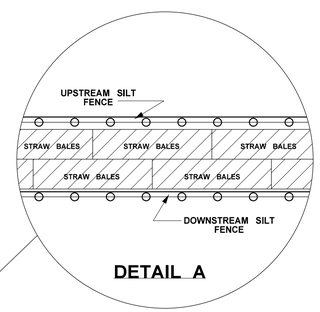


DETAIL A

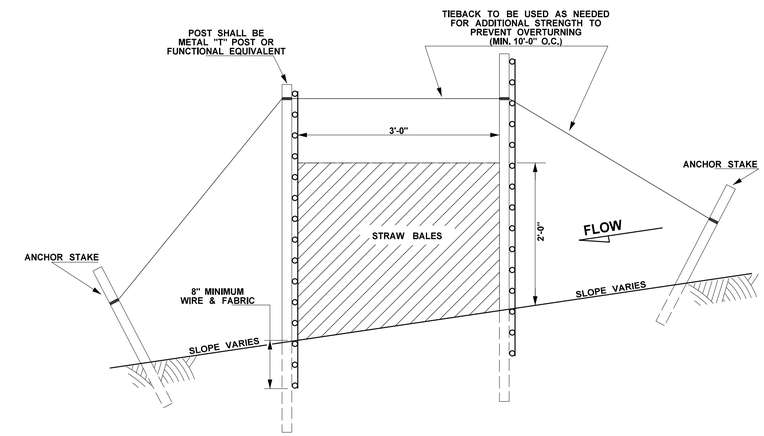


# SIDE VIEW SECTION A-A METHOD II MECHANICAL INSTALLATION

NOTES:

1. RETENTION BARRIERS SHALL BE USED IN AREAS WHERE FLOW IS NOT SEVERE.
2. RETENTION BARRIERS ARE TEMPORARY SEDIMENT CONTROL ITEMS THAT SHALL BE ERECTED OPPOSITE ERODIBLE AREAS SUCH AS NEWLY GRADED FILL SLOPES AND ADJACENT TO STREAMS AND CHANNELS.
3. RETENTION BARRIERS SHOULD BE PLACED WELL INSIDE RIGHT-OF-WAY AND ALONG EDGE OF CLEARING LIMITS. THIS WILL ALLOW ROOM FOR A BACK-UP FENCE IF FIRST FENCE BECOMES FULL.
4. THE CONTRACTOR MAY ELECT TO USE EITHER METHOD I OR METHOD II. COST TO BE LINEAR FEET OF SILT FENCE.
5. METHOD II INSTALLATION SHALL BE ACCOMPLISHED USING AN IMPLEMENT THAT IS MANUFACTURED FOR THE APPLICATION AND PROVIDES A CONFIGURATION MEETING THE REQUIREMENTS OF THE DETAIL.
6. WIRE SHALL BE MINIMUM OF 32" IN WIDTH AND SHALL HAVE A MINIMUM OF 6 LINE WIRES WITH 12" STAY SPACING.
7. GEOTEXTILE FABRIC MEETING THE TYPE II MATERIAL REQUIREMENTS AND INSTALLED ACCORDING TO SPECIFICATION MAY BE USED WITHOUT WIRE FENCE.

MISSISSIPPI DEPARTMENT OF TRANSPORTATION

REVISION | BY | DATE

**SEDIMENT RETENTION BARRIER**

COUNTY: ER-0246-00(015)

PROJ. NUM.: ER-0246-00(015)

WORKING NUMBER: ECD-22

FILENAME: ECD-22.DGN

DESIGN TEAM _____ CHECKED _____ DATE 9/29/15

SHEET NUMBER: 34

PLAN
ROADWAY DESIGN DIVISION
MISSISSIPPI DEPARTMENT OF TRANSPORTATION

8/16/2016 2:31:17 PM ECD-22.DGN

| STATE | PROJECT NO. |
|---|---|
| MISS. | ER-0246-00(015) |

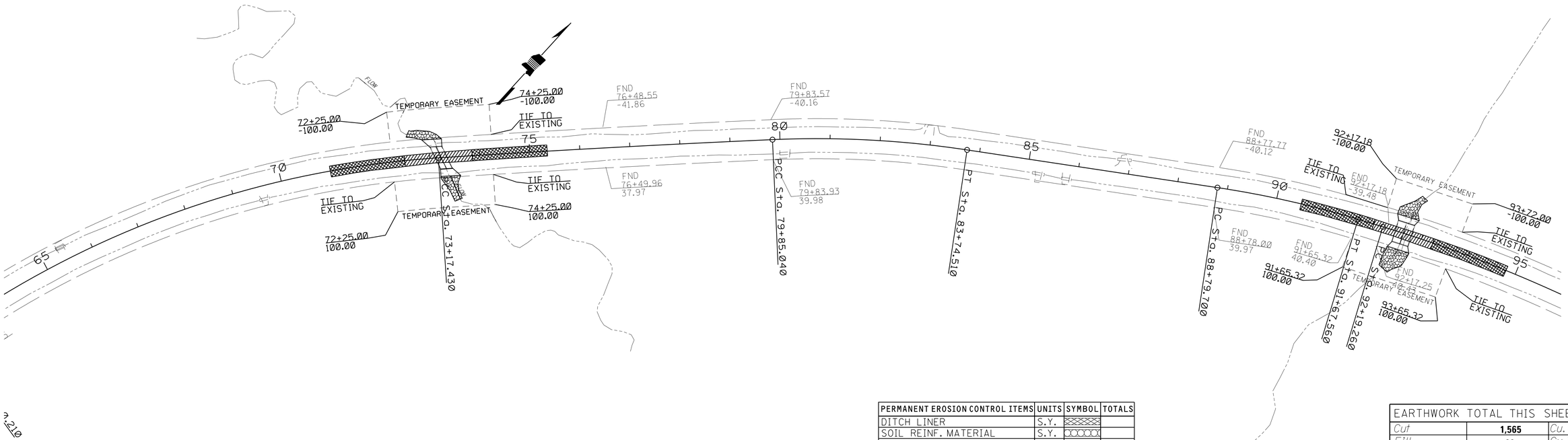


| PERMANENT EROSION CONTROL ITEMS | UNITS | SYMBOL | TOTALS |
|---|---|---|---|
| DITCH LINER | S.Y. | | |
| SOIL REINF. MATERIAL | S.Y. | | |
| PAVED DITCH | C.Y. | | |
| RIPRAP | TON | | 824 |
| GEOTEXTILE | S.Y. | | 1,067 |
| SOLID SOD | S.Y. | | |

| EARTHWORK TOTAL THIS SHEET | | |
|---|---|---|
| Cut | 1,565 | Cu.Yds |
| Fill | 68 | Cu.Yds |
| Excess | | Cu.Yds |
| Surplus | | Cu.Yds |
| Borrow( ) | 739 | Cu.Yds |

PLAN-PROFILE
ROADWAY DESIGN DIVISION
MISSISSIPPI DEPARTMENT OF TRANSPORTATION

2:31:22 PM 4/3 ECP-3.DGN

Wk. Sh.
ECP-3
Sh. No.
35

| STATE | PROJECT NO. |
|---|---|
| MISS. | MP-7044-46(007) |

TYPE I

TYPE II

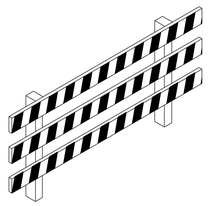

TYPE III

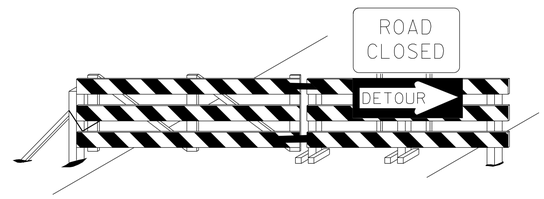


BARRICADE CLOSING A ROAD

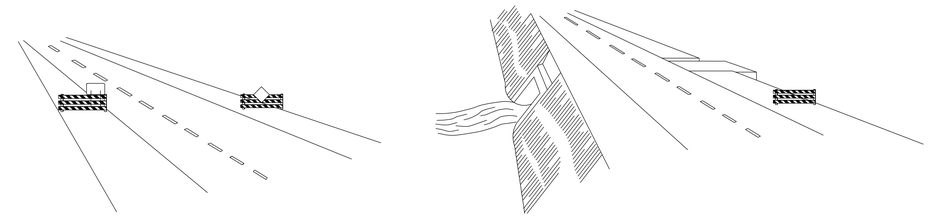

## STANDARD BARRICADES

1. A TYPE I BARRICADE CONSISTS OF ONE (1) HORIZONTAL RAIL SUPPORTED BY A DEMOUNTABLE FRAME OR A LIGHT "A" FRAME. A TYPE I BARRICADE NORMALLY WOULD BE USED ON CONVENTIONAL ROADS OR URBAN STREETS AND ARTERIALS.
2. A TYPE II BARRICADE CONSISTS OF TWO (2) HORIZONTAL RAILS ON A LIGHT "A" FRAME. TYPE II BARRICADES ARE INTENDED FOR USE ON EXPRESSWAYS AND FREEWAYS AND OTHER HIGH-SPEED ROADWAYS.
3. TYPE I AND TYPE II BARRICADES ARE INTENDED FOR USE WHERE THE HAZARD IS RELATIVELY SMALL AS, FOR EXAMPLE, ON CITY STREETS, OR FOR THE MORE OR LESS CONTINUOUS DELIMITING OF A RESTRICTED ROADWAY, OR FOR TEMPORARY DAYTIME USE.
4. A TYPE III BARRICADE CONSISTS OF THREE (3) HORIZONTAL RAILS SUPPORTED BY FIXED POSTS, A RIGID SKID, A HEAVY DEMOUNTABLE FRAME OR A HEAVY, HINGED "A" FRAME.
5. TYPE III BARRICADES ARE INTENDED FOR USE ON CONSTRUCTION AND MAINTENANCE PROJECTS AS WING BARRICADES AND AT ROAD CLOSURES, WHERE THEY MUST REMAIN IN PLACE FOR EXTENDED PERIODS.
6. THE MARKING FOR BARRICADE RAILS SHALL BE ORANGE AND WHITE (SLOPING DOWNWARD AT AN ANGLE OF 45° IN THE DIRECTION TRAFFIC IS TO PASS).
7. DO NOT PLACE SANDBAGS OR OTHER DEVICES TO PROVIDE MASS ON THE BOTTOM RAIL THAT WILL BLOCK VIEW OR RAIL FACE.
8. FOR ADDITIONAL INFORMATION OR DETAILS, SEE MUTCD, LATEST EDITION.

## BARRICADE CHARACTERISTICS

| | I | II | III |
|---|---|---|---|
| WIDTH OF RAIL ✱✱ | 8" MIN. - 12" MAX. | 8" MIN. - 12" MAX. | 8" MIN. - 12" MAX. |
| LENGTH OF RAIL ✱✱ | 24" MIN. | 24" MIN. | 48" MIN. |
| WIDTH OF STRIPE ✱ | 6" | 6" | 6" |
| HEIGHT | 36" MIN. | 36" MIN. | 60" MIN. |
| NUMBER OF REFLECTORIZED RAIL FACES | 2 (ONE EACH DIRECTION) | 4 (TWO EACH DIRECTION) | 3 IF FACING TRAFFIC IN ONE DIRECTION<br>6 IF FACING TRAFFIC IN TWO DIRECTIONS |
| TYPE OF FRAME | LIGHT | LIGHT "A" FRAME | POST OR SKID |

✱ 1. FOR RAILS LESS THAN 36" LONG, 4" WIDE STRIPES MAY BE USED.

✱✱ 2. BARRICADES INTENDED FOR USE ON EXPRESSWAYS, FREEWAYS AND OTHER HIGH SPEED ROADWAYS, SHALL HAVE A MINIMUM OF 270 $in^2$ OF REFLECTIVE AREA FACING TRAFFIC.

## WING BARRICADES

1. WING BARRICADES ARE TYPE III BARRICADES ERECTED ON THE SHOULDER ON ONE OR BOTH SIDES OF THE PAVEMENT TO GIVE THE SENSATION OF A NARROWING OR RESTRICTED ROADWAY. WING BARRICADES MAY BE USED AS A MOUNTING FOR THE ADVANCE WARNING SIGNS OR FLASHERS.
2. WING BARRICADES SHOULD BE USED:
   A. IN ADVANCE OF A CONSTRUCTION PROJECT EVEN WHEN NO PART OF THE ROADWAY IS ACTUALLY CLOSED.
   B. IN ADVANCE OF ALL BRIDGE OR CULVERT WIDENING OPERATIONS.

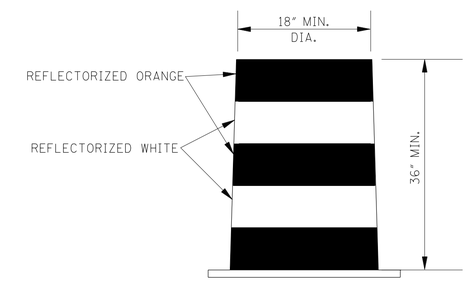


## PLASTIC DRUM STRIPING DETAIL

1. PLASTIC DRUMS SHALL BE ON END AND USED AS AN EXPEDIENT METHOD FOR TRAFFIC CHANNELIZATION. THE COLOR AND MARKING OF DRUMS SHALL BE CONSISTENT WITH MARKING STANDARDS FOR BARRICADE. THE PREDOMINANT COLOR ON DRUMS SHALL BE ORANGE WITH FOUR (4) REFLECTORIZED, HORIZONTAL, CIRCUMFERENTIAL STRIPES (2 ORANGE & 2 WHITE) 6" WIDE.
2. DRUMS SHOULD NEVER BE PLACED IN THE ROADWAY WITHOUT WARNING SIGNS.
3. WHERE PRACTICAL PLASTIC DRUMS SHALL BE PLACED NO CLOSER THAN 3'-0" FROM THE EDGE OF TRAVELED LANE.

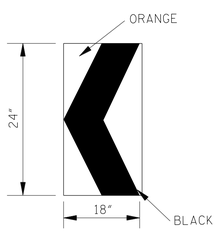


## CHEVRON SIGN DETAIL

1. A CHEVRON SIGN CONSISTS OF A BLACK CHEVRON TYPE MARKING ON AN ORANGE BACKGROUND AND SHALL POINT IN THE DIRECTION OF TRAFFIC FLOW.
2. THE CHEVRON SIGN SHALL BE MOUNTED ON FIXED POST OR RIGID SKID.
3. CHEVRON SIGNS MAY BE USED TO SUPPLEMENT OTHER STANDARD DEVICES WHERE ONE OR MORE LANES ARE CLOSED FOR CONSTRUCTION OR MAINTENANCE. THEY SHALL BE PLACED APPROXIMATELY 2'-0" BEHIND THE LANE TRANSITION STRIPE.

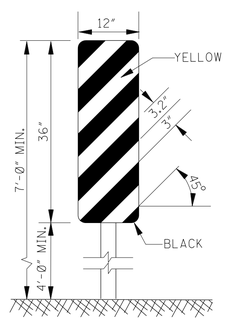


## TYPE 3 OBJECT MARKER

(OM–3R)

1. TYPE 3 OBJECT MARKERS SHALL BE USED AT ALL EXPOSED BRIDGE ABUTMENTS AND AT OTHER LOCATIONS AS DEEMED NECESSARY BY THE ENGINEER.
2. THE OM-3R IS SHOWN. THE OM-3L IS SIMILAR EXCEPT THE STRIPES SLOPE DOWNWARD FROM THE UPPER LEFT SIDE TO THE LOWER RIGHT SIDE AND SHALL BE PLACED ON THE LEFT SIDE OF THE OBJECT.
3. THE INSIDE EDGE OF THE MARKER SHALL BE IN LINE WITH THE INNER EDGE OF THE OBSTRUCTION.

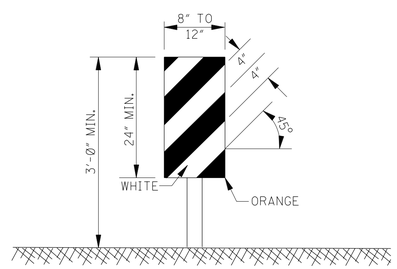


## VERTICAL PANEL

1. VERTICAL PANELS CONSIST OF AT LEAST ONE PANEL 8" TO 12" IN WIDTH AND A MINIMUM OF 24" IN HEIGHT.
2. THE DIAGONAL STRIPES SHALL SLOPE DOWNWARD IN THE DIRECTION THAT TRAFFIC IS TO PASS THE PANEL. THE PANELS SHALL BE MOUNTED WITH THE TOP A MINIMUM OF 36" ABOVE THE ROADWAY ON A SINGLE LIGHTMASS POST.
3. VERTICAL PANELS USED ON EXPRESSWAYS, FREEWAYS AND OTHER HIGH-SPEED ROADWAYS SHALL HAVE A MINIMUM OF 270 $in^2$ OF RETROREFLECTIVE AREA FACING TRAFFIC.
4. FOR TWO-WAY TRAFFIC OPERATIONS, BACK-TO-BACK PANELS SHALL BE USED.

GENERAL NOTES:

1. MARKINGS ON ALL DEVICES SHOWN ON THIS SHEET SHALL BE HIGH INTENSITY REFLECTIVE SHEETING.
2. THE TRAFFIC CONTROL PLAN WILL LIST THE VARIOUS TRAFFIC CONTROL DEVICES REQUIRED FOR EACH PROJECT.

MISSISSIPPI DEPARTMENT OF TRANSPORTATION

**HIGHWAY SIGN AND BARRICADE DETAILS FOR CONSTRUCTION PROJECTS**

**COUNTY: MARION**

**PROJ. NUM.: MP-7044-46(007)**

| REVISION | BY | DATE |
|---|---|---|
| | | |

FILENAME: SDTCP-10_06012012.DGN

DESIGN TEAM _____ CHECKED _____ DATE 6/1/2012

WORKING NUMBER SDTCP-10

SHEET NUMBER 36

PLAN
ROADWAY DESIGN DIVISION
MISSISSIPPI DEPARTMENT OF TRANSPORTATION

8/16/2016 2:31:36 PM (9) SDTCP-10_06012012.DGN

FMS CON:107382/301000

| STATE | PROJECT NO. |
|---|---|
| MISS. | ER-0246-00(015) |

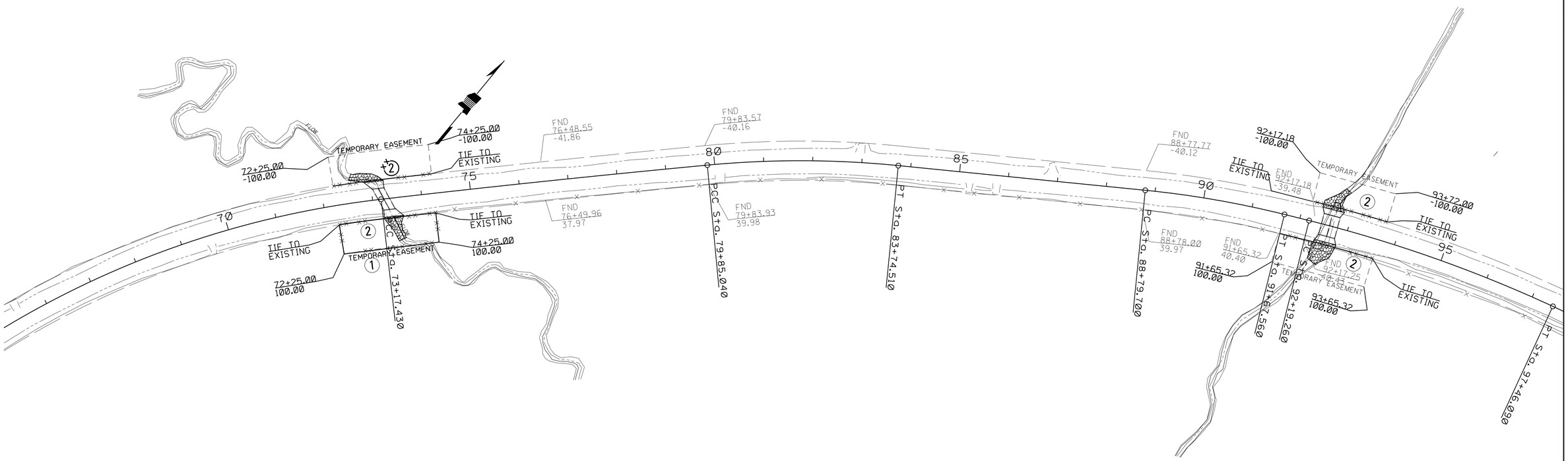


1 FENCE SHALL BE REQUIRED PRIOR TO ANY WORK ON THIS SITE.

2 FENCE SHALL BE REQUIRED AT THE COMPLETION OF ALL WORK ON BOTH SITES.

| REVISION | BY | DATE |
|---|---|---|
| | | |

MISSISSIPPI DEPARTMENT OF TRANSPORTATION

PROPOSED FENCING
PHASES

COUNTY: PIKE

PROJ. NO.: ER-0246-00(015)

FILENAME: RWD.CEL

DESIGN TEAM _____ CHECKED _____ DATE _____

WORKING NUMBER
PFP-1

SHEET NUMBER
37

PLAN
ROADWAY DESIGN DIVISION
MISSISSIPPI DEPARTMENT OF TRANSPORTATION

8/16/2016 2:31:38 PMWK-11.DGN

| STATE | PROJECT NO. |
|---|---|
| MISS. | |

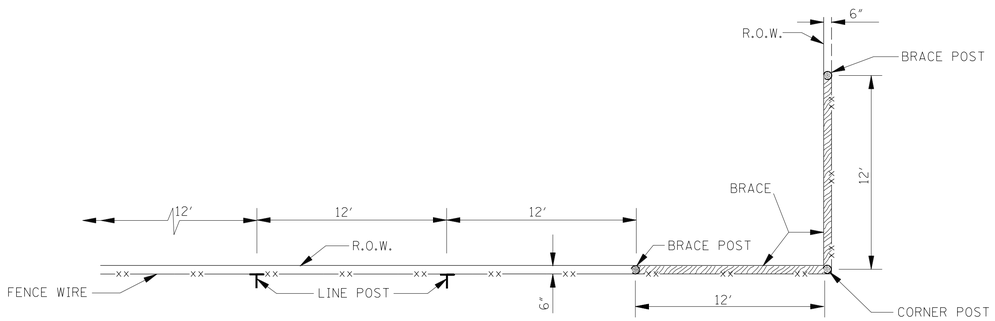


PLAN SHOWING PLACEMENT OF FENCE ALONG RIGHT OF WAY

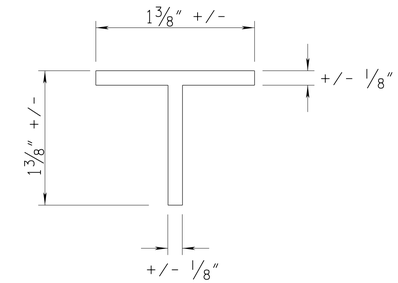


SECTION OF TEE POST

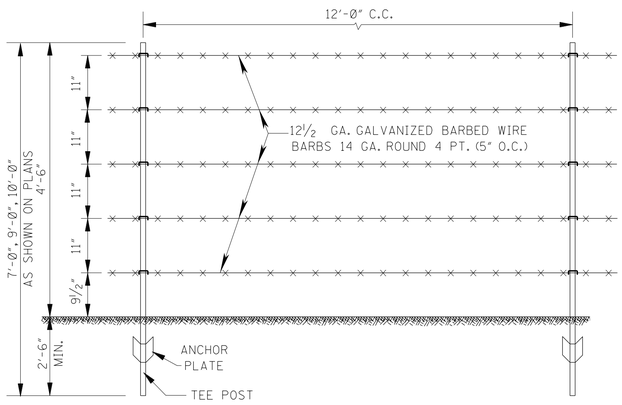


DETAILS OF LINE FENCE AND LINE POSTS

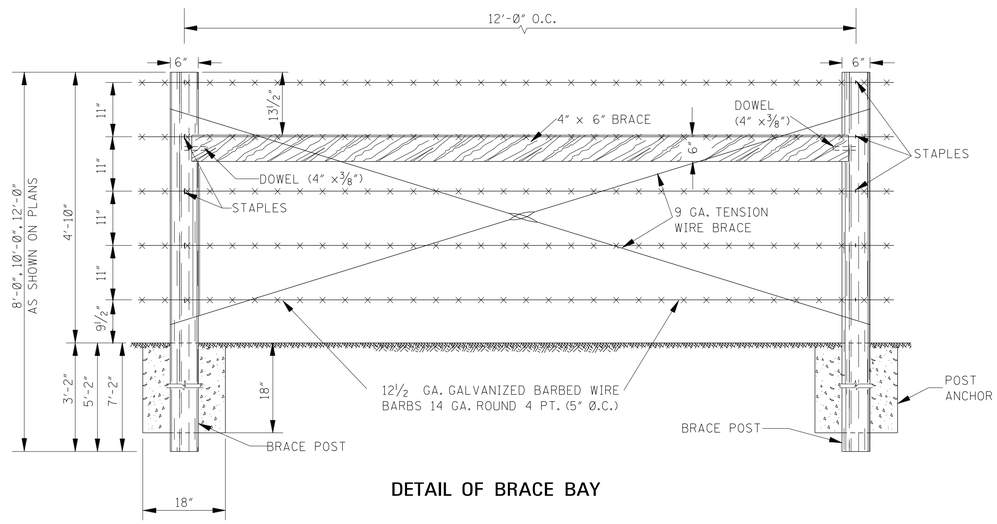


DETAIL OF BRACE BAY

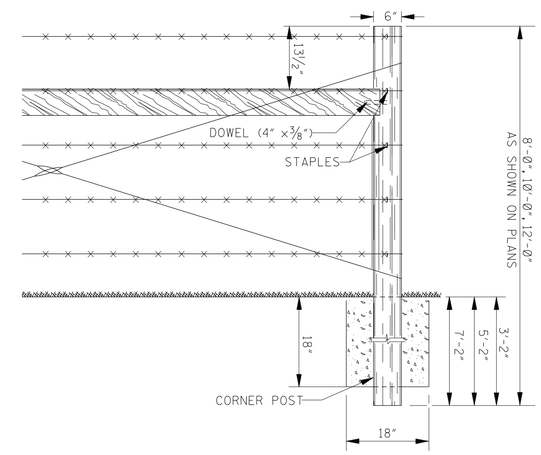


DETAIL OF CORNER BRACE

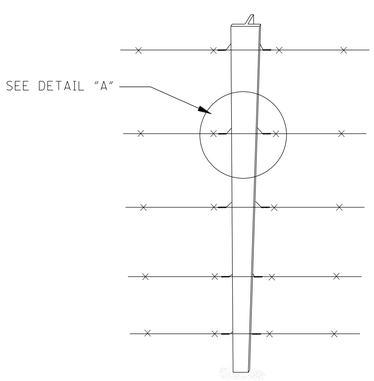


BIRDS–EYE VIEW

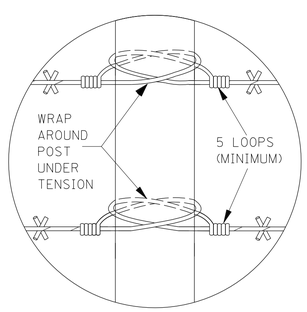


DETAIL "A"

SPLICING DETAILS AT POSTS

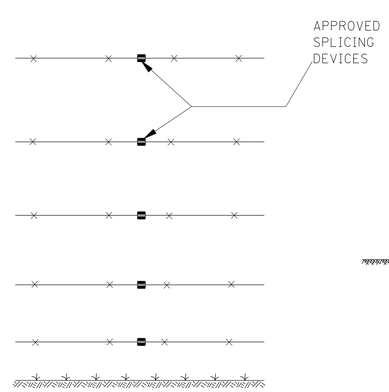


SPLICING DETAILS BETWEEN POSTS

NOTE: APPROVED SPLICING DEVICES FOR BARBED WIRE MAY IN ADDITION, BE PERMITTED AT OTHER LOCATIONS.

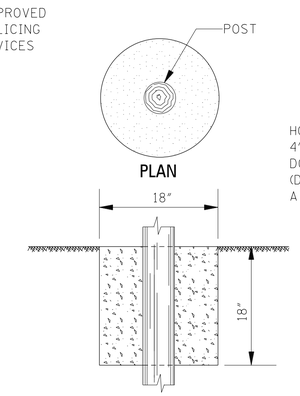


SECTION

POST ANCHOR DETAILS

NOTE: TO BE USED AT BRACE AND CORNER POSTS AND ELSEWHERE OR AS DIRECTED BY THE ENGINEER.

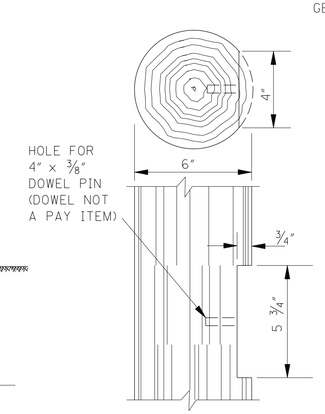


DETAILS OF BRACE JOINT

GENERAL NOTES:

1. BRACE BAYS TO BE SPACED 500 FT. APART ON TANGENTS AND 250 FT. APART ON CURVES OR AS DIRECTED BY THE ENGINEER.
2. TENSION WIRES TO BE DOUBLED AND LOOPED, TIGHTENED TO DESIRED TENSION.
3. TENSION WIRES ARE NOT A PAY ITEM. COST TO BE ABSORBED IN UNIT PRICES OF OTHER ITEMS.
4. STEEL TEE POSTS SHALL MEET THE REQUIREMENTS OF ASTM DESIGNATION : A 702, GALVANIZED IN ACCORDANCE WITH THE REQUIREMENTS OF ASTM DESIGNATION : A123
5. ANCHOR PLATES SHALL HAVE A MINIMUM AREA OF 18 $IN^2$ AND SHALL MEET THE REQUIREMENTS OF ASTM DESIGNATION : A702.
6. BARBED WIRE SHOWN. WOVEN WIRE MAY BE USED. SEE SHEET WW-1 FOR OTHER DETAILS.
7. EACH LINE POST SHALL BE PROVIDED WITH NOT LESS THAN FIVE SUITABLE FASTNERS FOR ATTACHING FENCE WIRE TO THE TEE-POSTS.

| DATE | REVISION | BY |
|---|---|---|

MISSISSIPPI DEPARTMENT OF TRANSPORTATION

**FENCE: BARBED WIRE OR WOVEN WIRE ON TEE POSTS**

WORKING NUMBER: BB-1

FILENAME: dgns/bb-1.dgn

DESIGN TEAM _____ CHECKED _____ DATE _____

SHEET NUMBER: 38

PLAN
ROADWAY DESIGN DIVISION C.A.D.D. SECTION
MISSISSIPPI DEPARTMENT OF TRANSPORTATION

| STATE | PROJECT NO. |
|---|---|
| MISS. | ER-0246-00(015) |

# VEGETATION SCHEDULE

| EROSION CONTROL ITEMS | | SEASONAL APPLICATIONS-DATES & RATES | | | | REQUIREMENTS |
|---|---|---|---|---|---|---|
| | | SPRING & SUMMER | | FALL & WINTER | | |
| PAY ITEM NO. | ITEMS | RATES | DATES | RATES | DATES | |
| 907-225-A001 | STANDARD GROUND PREPARATION | PER SQ.YD. | MARCH 1 TO SEPTEMBER 1 | PER SQ.YD. | SEPTEMBER 1 TO MARCH 1 | GROUND PREPARATION REQUIRED ON AREAS TO RECEIVE SOLID SODDING OR SEEDING, AS APPLICABLE. |
| 907-225-B001 | AGRICULTURAL LIMESTONE | 1000 TONS/ACRE | MARCH 1 TO SEPTEMBER 1 | 1000 TONS/ACRE | SEPTEMBER 1 TO MARCH 1 | LIMESTONE SHALL BE MECHANICALLY SPREAD UNIFORMLY AND INCORPORATED INTO THE SOIL PRIOR TO PLANTING. |
| 907-225-A001 | COMBINATION FERTILIZER (13-13-13) | 250 LBS./ACRE | MARCH 1 TO SEPTEMBER 1 | 250 LBS./ACRE | SEPTEMBER 1 TO MARCH 1 | FERTILIZER SHALL BE MECHANICALLY SPREAD UNIFORMLY AND INCORPORATED INTO THE SOIL PRIOR TO PLANTING. |
| ① 213-C001 | SUPERPHOSPHATE | 0.5 TONS/ACRE (EST.) | MARCH 1 TO DECEMBER 1 | 0.5 TONS/ACRE (EST.) | SEPTEMBER 1 TO MARCH 1 | SUPERPHOSPHATE (FOR BID ITEM PURPOSES). |
| ② 907-225-A001 | SEEDING (BERMUDAGRASS) | 80 LBS./ACRE | MARCH 1 TO SEPTEMBER 1 | 80 LBS./ACRE | SEPTEMBER 1 TO MARCH 1 | SEED REQUIRED ON DISTURBED AREAS. UNHULLED SEED MAY BE REQUIRED DURING THE DORMANT SEASON AS DIRECTED. |
| 907-225-A001 | SEEDING (TALL FESCUE) | -- LBS./ACRE | | 100 LBS./ACRE | SEPTEMBER 1 TO MARCH 1 | SEED REQUIRED ON DISTURBED AREAS. |
| ③ 907-225-A001 | SEEDING (BAHIAGRASS) | 80 LBS./ACRE | MARCH 1 TO SEPTEMBER 1 | -- LBS./ACRE | SEPTEMBER 1 TO MARCH 1 | SEED REQUIRED ON DISTURBED AREAS. UNHULLED SEED MAY BE REQUIRED DURING THE DORMANT SEASON AS DIRECTED. |
| ③ 907-225-A001 | SEEDING (CRIMSON CLOVER) | -- LBS./ACRE | MARCH 1 TO SEPTEMBER 1 | 20 LBS./ACRE | SEPTEMBER 1 TO MARCH 1 | SEED REQUIRED ON DISTURBED AREAS. UNHULLED SEED MAY BE REQUIRED DURING THE DORMANT SEASON AS DIRECTED. |
| 907-225-C001 | MULCH - VEGETATIVE MULCH | 2 TONS ACRE (EST.) | MARCH 1 TO SEPTEMBER 1 | 2 TONS/ACRE (EST.) | SEPTEMBER 1 TO MARCH 1 | THE ENGINEER WILL DESIGNATE THE RATES OF APPLICATION (SEE SUBSECTION 215.03.3). |
| ④ 220-A001 | INSECT PEST CONTROL | PER ACRE | | PER ACRE | | SEE SECTION 220. |
| | **TEMPORARY EROSION CONTROL ITEMS** | | | | | |
| 907-226-A001 | LIGHT GROUND PREPARATION | PER SQ.YD. | | PER SQ.YD. | | APPROXIMATELY HALF SQ. YD. STANDARD GROUND PREPARATION |
| 907-226-A001 | COMBINATION FERTILIZER (13-13-13) | 250 LBS./ACRE | | 250 LBS./ACRE | | QUANTITY BASED ON LIGHT GROUND PREPARATION |
| 907-226-A001 | SEEDING (BROWN TOP MILLET) | 20 LBS./ACRE | APRIL 1 TO AUGUST 31 | ——— | ——— | QUANTITY BASED ON LIGHT GROUND PREPARATION |
| 907-226-A001 | SEEDING (RYE GRASS) | ——— | ——— | 25 LBS./ACRE | SEPTEMBER 1 TO MARCH 31 | QUANTITY BASED ON LIGHT GROUND PREPARATION |
| 907-226-A001 | SEEDING (OATS) | ——— | ——— | 90 LBS./ACRE | SEPTEMBER 1 TO DECEMBER 15 | QUANTITY BASED ON LIGHT GROUND PREPARATION |
| 907-226-A001 | VEGETATIVE MATERIAL FOR MULCH | 2 TON /ACRE (EST.) | APRIL 1 TO AUGUST 31 | 2 TON /ACRE (EST.) | SEPTEMBER 1 TO DECEMBER 15 | QUANTITY BASED ON LIGHT GROUND PREPARATION |

① ALL AREAS THAT HAVE BEEN VEGETATED, UNDER THIS CONTRACT FOR AT LEAST (60) SIXTY DAYS, RECEIVE ADDITIONAL APPLICATION(S) OF FERTILIZER(S) OF THE TYPE(S) AND RATE(S) OF APPLICATIONS AS DETERMINED BY SOIL TESTS OR AS DIRECTED DURING THE GROWING SEASONS THE CONTRACT IS IN FORCE. GROUND PREPARATION WILL NOT BE REQUIRED FOR THE ADDITIONAL APPLICATIONS. PAYMENT FOR ALL FERTILIZERS ACCEPTABLY APPLIED AS AN ADDITIONAL APPLICATION(S) WILL BE MADE IN ACCORDANCE WITH SUPERPHOSPHATE BID ITEM 213-C001.

② PROPOSAL QUANTITIES ESTIMATED ON THE BASIS THAT 100% OF THE ACREAGE WILL BE SEEDED.

③ PROPOSAL QUANTITIES ESTIMATED ON THE BASIS THAT 50% OF THE ACREAGE WILL BE SEEDED.

④ QUANTITY ESTIMATED ON THE BASIS 50% OF THE ACREAGE VEGETATED MAY REQUIRE TREATMENT.

✳ BERMUDA GRASS SEED MIX - 50% HOLLED
50% UNHOLLED

| DATE | REVISION | BY |
|---|---|---|

MISSISSIPPI DEPARTMENT OF TRANSPORTATION

VEGETATION SCHEDULE

COUNTY: PIKE

PROJ. NO.: ER-0246-00(015)

FILENAME: RWD.CEL

DESIGN TEAM _____ CHECKED _____ DATE _____

WORKING NUMBER VS-1

SHEET NUMBER 39

PLAN
ROADWAY DESIGN DIVISION
MISSISSIPPI DEPARTMENT OF TRANSPORTATION

8/16/2016 2:31:42 PM:09\VEGETATIVE SCHEDULE.DGN

| STATE | PROJECT NO. |
|---|---|
| MISS. | |

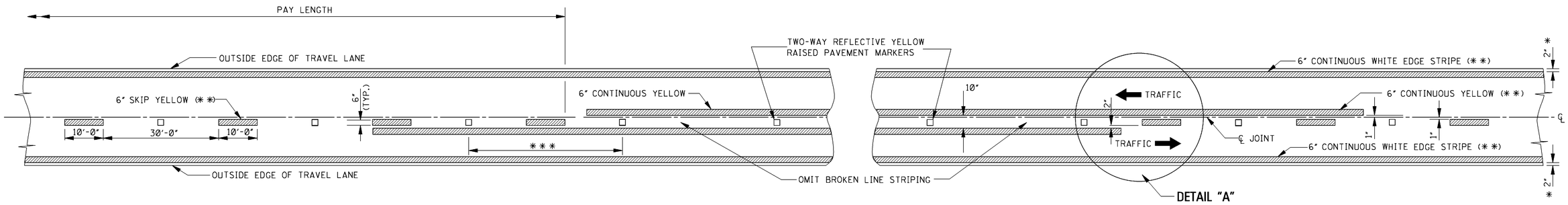


**TWO–WAY TRAFFIC**
**(ASPHALT OR CONCRETE PAVEMENT)**

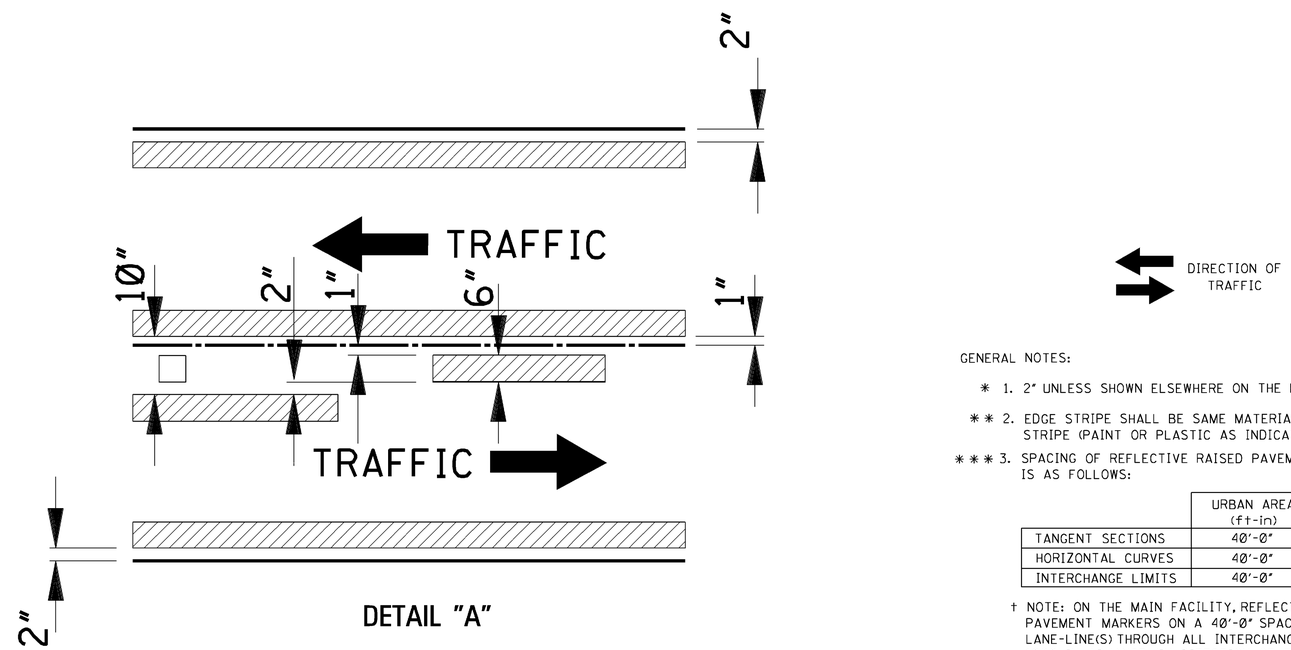


GENERAL NOTES:

* 1. 2" UNLESS SHOWN ELSEWHERE ON THE PLANS.

** 2. EDGE STRIPE SHALL BE SAME MATERIAL AS LANE-LINE STRIPE (PAINT OR PLASTIC AS INDICATED IN PAY ITEMS).

*** 3. SPACING OF REFLECTIVE RAISED PAVEMENT MARKERS IS AS FOLLOWS:

| | URBAN AREA (ft-in) | RURAL AREA (ft-in) |
|---|---|---|
| TANGENT SECTIONS | 40'-0" | 80'-0" |
| HORIZONTAL CURVES | 40'-0" | 40'-0" |
| INTERCHANGE LIMITS | 40'-0" | † 40'-0" |

† NOTE: ON THE MAIN FACILITY, REFLECTIVE RED-CLEAR RAISED PAVEMENT MARKERS ON A 40'-0" SPACING WILL BE REQUIRED ON LANE-LINE(S) THROUGH ALL INTERCHANGE AREAS BEGINNING 1000' IN ADVANCE (IN DIRECTION OF TRAFFIC) OF THE EXIT RAMP TAPER AND CONTINUING THROUGH THE INTERCHANGE TO THE END OF THE ENTRANCE RAMP TAPER.

4. PAVEMENT MARKERS SHALL BE HIGH PERFORMANCE REFLECTIVE RAISED PAVEMENT MARKERS AS LISTED IN THE MDOT "APPROVED SOURCES OF MATERIALS."

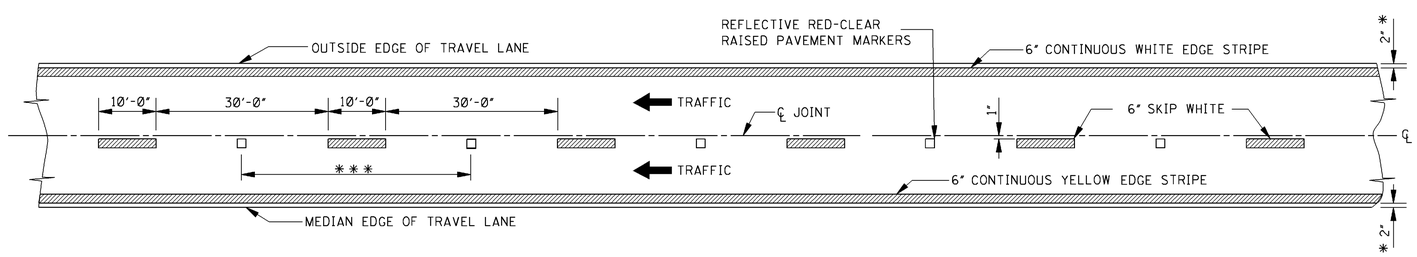


**4–LANE WITH ONE–WAY TRAFFIC**

| DATE | REVISION | BY |
|---|---|---|
| 12-1-99 | REVISE STRIPE WIDTH | S.W.R. |

MISSISSIPPI DEPARTMENT OF TRANSPORTATION
ROADWAY DESIGN DIVISION
STANDARD PLAN

# PAVEMENT MARKING DETAILS FOR 2–LANE AND 4–LANE DIVIDED HIGHWAYS

ENGLISH

WORKING NUMBER PM-1

ISSUE DATE: OCTOBER 1, 1998

SHEET NUMBER 6120

| STATE | PROJECT NO. |
|---|---|
| MISS. | |

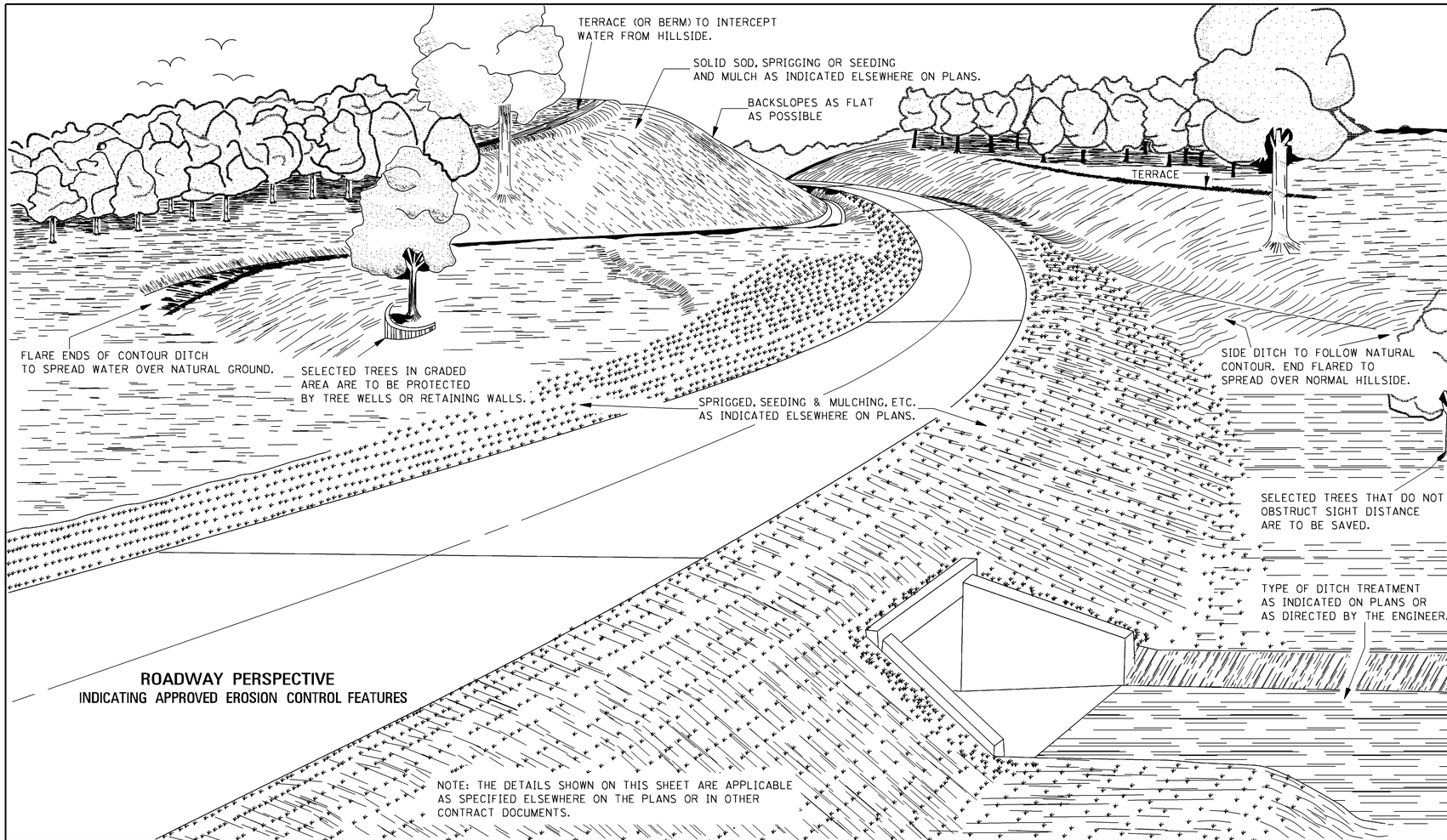


**ROADWAY PERSPECTIVE**
INDICATING APPROVED EROSION CONTROL FEATURES

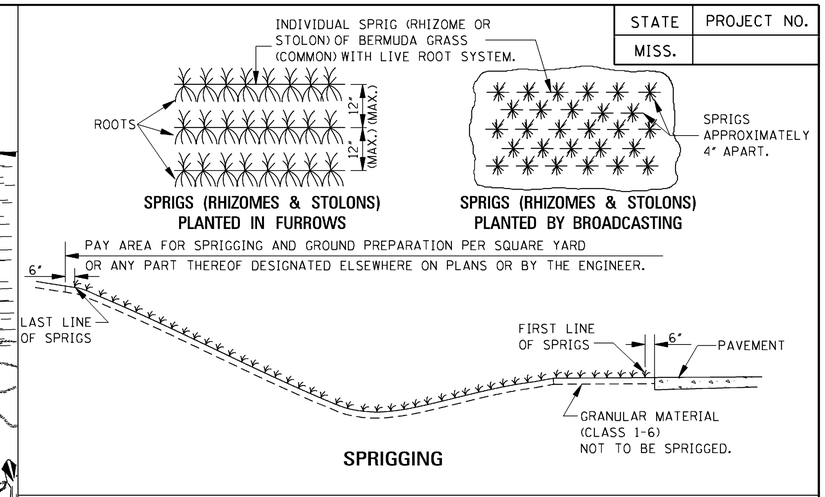


**SPRIGS (RHIZOMES & STOLONS) PLANTED IN FURROWS**

**SPRIGS (RHIZOMES & STOLONS) PLANTED BY BROADCASTING**

**SPRIGGING**

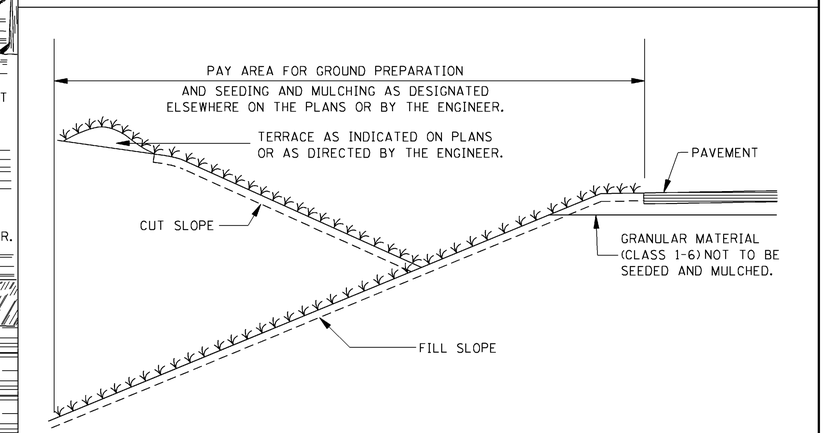


**SEEDING AND MULCHING**

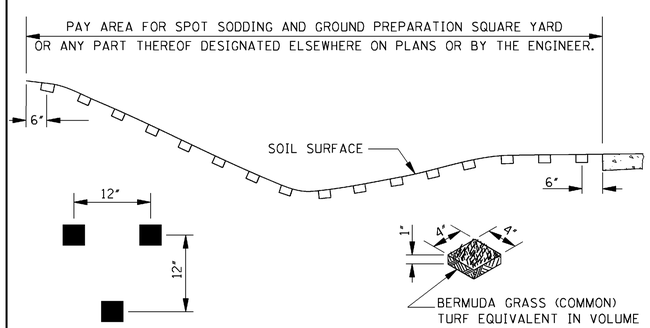


**ARRANGEMENT OF SOD TURFS**

**SPOT SODDING**

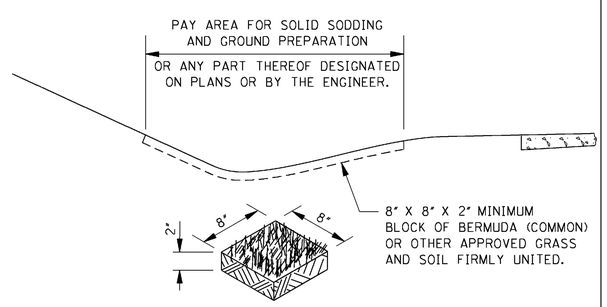


**SOLID SODDING**

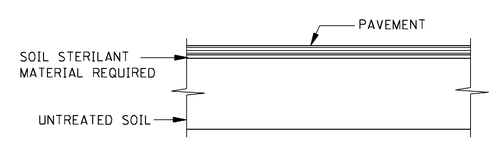


**SOIL STERILIZATION UNDER PAVED AREAS**
**(ISLANDS, MEDIANS OR SLOPE PAVEMENT)**

GENERAL NOTE:

1. LONGITUDINAL AND TRANSVERSE MEASUREMENTS FOR THE PAY AREA SHALL BE TAKEN ALONG THE SLOPES.

| DATE | REVISION | BY |
|---|---|---|
| | | |

MISSISSIPPI DEPARTMENT OF TRANSPORTATION
ROADWAY DESIGN DIVISION
STANDARD PLAN

***EROSION CONTROL***

ENGLISH

WORKING NUMBER EC-1

ISSUE DATE: OCTOBER 1, 1998

SHEET NUMBER 6140

| STATE | PROJECT NO. |
|---|---|
| MISS. | |

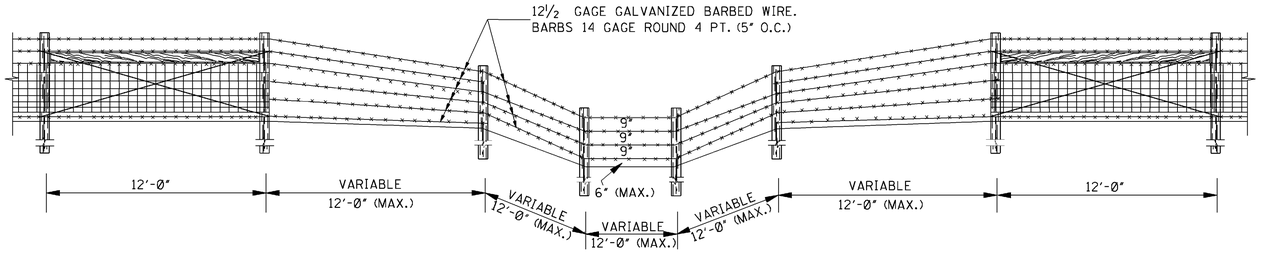


## CROSSING TYPE I

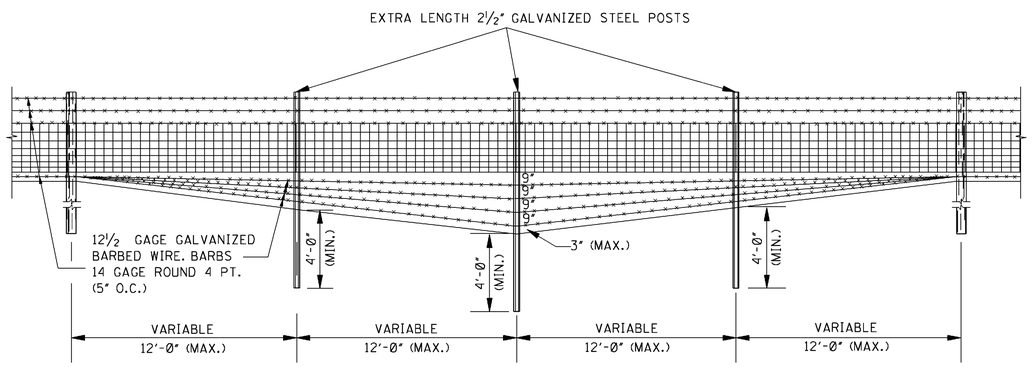


## CROSSING TYPE II

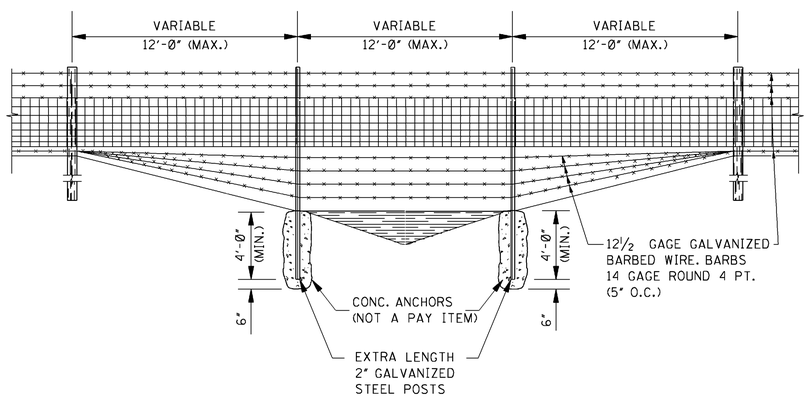


## CROSSING TYPE III

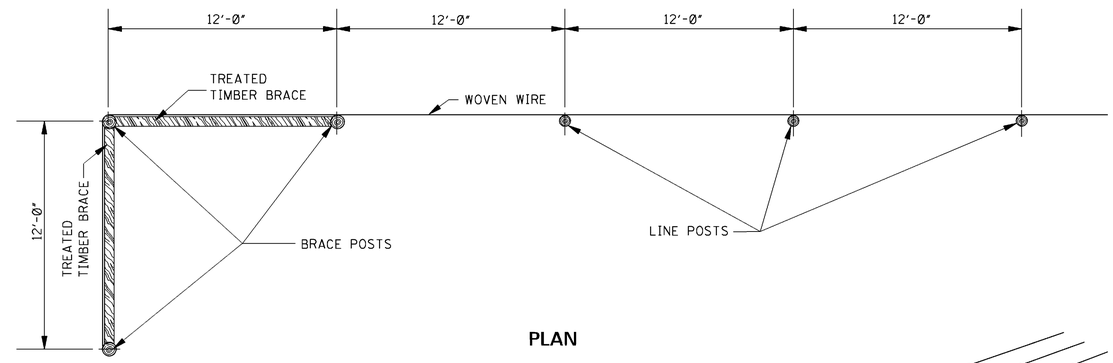


## PLAN

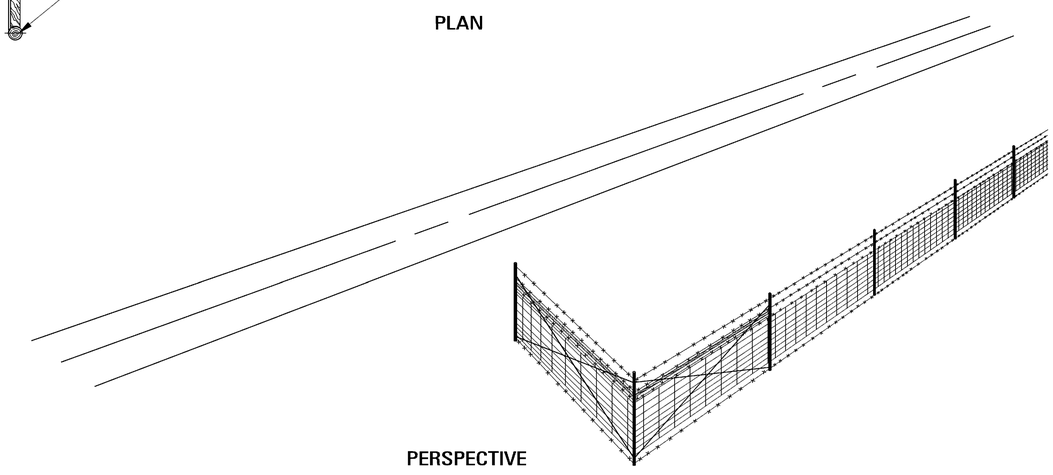

## PERSPECTIVE

GENERAL NOTES:

1. THE FENCE SHALL BE TURNED IN AT THE POINT OF "NO ACCESS" AS SHOWN IF THE R.O.W. IS MORE THAN 12'-0" OUTSIDE THE CLEAR ZONE
2. IF THE R.O.W. IS LESS THAN 12'-0" OUTSIDE THE CLEAR ZONE, THE FENCE WILL BE ENDED AT THE POINT OF "NO ACCESS" WITHOUT TURNING IN.
3. THE ILLUSTRATIONS ARE SHOWN FOR WOVEN WIRE FENCE BUT ARE ALSO APPLICABLE TO CHAIN LINK FENCE.
4. THESE INSTALLATION CONDITIONS ARE TYPICAL AND ARE NOT TO BE CONSTRUED AS REPRESENTATIVE OF ALL CONDITIONS WHICH WILL BE ENCOUNTERED. CONSTRUCTION WILL BE VARIED AS REQUIRED OR DIRECTED TO MEET FIELD CONDITIONS.

| DATE | REVISION | BY |
|---|---|---|
| | | |

MISSISSIPPI DEPARTMENT OF TRANSPORTATION
ROADWAY DESIGN DIVISION
STANDARD PLAN

# FENCE: TYPICAL INSTALLATION AT DITCH CROSSINGS AND FENCE ENDINGS

DEPARTMENT OF TRANSPORTATION ENGLISH MISSISSIPPI

WORKING NUMBER FI-3

ISSUE DATE: OCTOBER 1, 1998

SHEET NUMBER 6166

| STATE | PROJECT NO. |
|---|---|
| MISS. | |

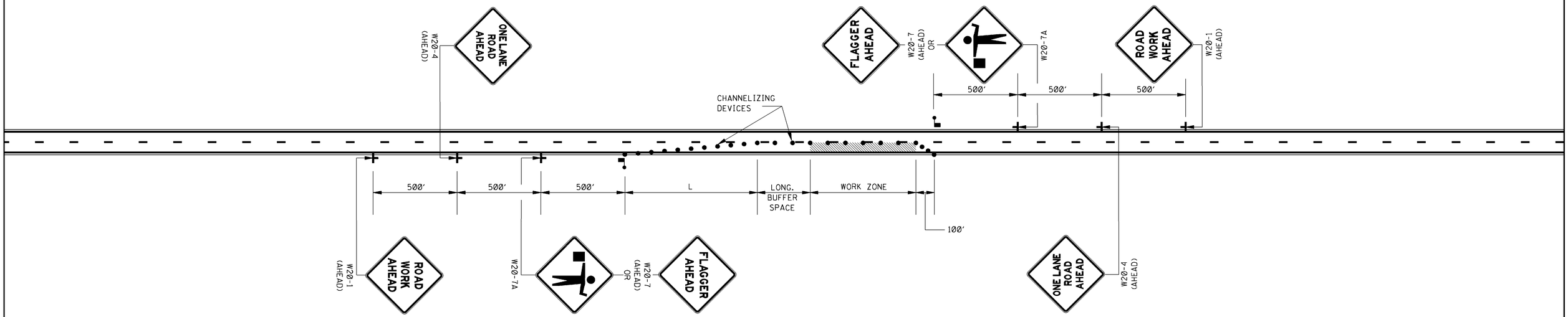


LEGEND

FLAGGER

● CHANNELIZING DEVICES

GENERAL NOTES:

1. THE LOCATION OF CHANNELIZING DEVICES AND THE WORK AREA LAYOUT SHALL BE BASED ON THE CRITERIA IN THE FOLLOWING TABLE:

| POSTED SPEED AND/OR DESIGN SPEED | MAXIMUM CHANNELIZING DEVICE SPACING (ft) | | MINIMUM LONGITUDINAL BUFFER SPACE (ft) | TAPER † RATES |
|---|---|---|---|---|
| mph | TAPER | ALONG LANE LINE & WORK ZONE | | |
| ≤40 | 40 | 80 | 170 | 27:1 |
| 45 | 45 | 90 | 220 | 45:1 |
| 50 | 50 | 100 | 280 | 50:1 |
| 55 | 55 | 110 | 335 | 55:1 |
| 60 | 60 | 120 | 415 | 60:1 |
| 65 | 65 | 130 | 485 | 65:1 |
| 70 | 70 | 140 | 575 | 70:1 |

† NOTE: TAPER RATES ARE DETERMINED USING THE FOLLOWING EQUATIONS:
$L = WS$ FOR SPEEDS OF 45 mph OR GREATER
$L = WS^2/60$ FOR SPEEDS OF 40 mph OR LESS
WHERE: L = MINIMUM LENGTH OF TAPER IN FEET
W = WIDTH OF OFFSET (USUALLY LANE WIDTH) IN FEET
S = DESIGN SPEED OR 85TH PERCENTILE SPEED IN MILES PER HOUR

2. ALL CHANNELIZING DEVICES SHALL BE A MINIMUM OF 24″ IN HEIGHT.

3. ALL TRAFFIC CONTROL ITEMS SHOWN ON THIS SHEET WILL NOT BE MEASURED FOR SEPARATE PAYMENT. THIS WORK IS TO BE INCLUDED IN THE PRICE BID FOR MAINTENANCE OF TRAFFIC.

4. DIAMOND SHAPED TRAFFIC CONTROL SIGNS SHALL BE A MINIMUM OF 48″ × 48″.

5. WHEN THERE IS NO EXISTING HAZARD OR AT THE END OF THE WORK DAY, ALL SIGNS SHALL BE COVERED OR REMOVED AND ALL CHANNELIZING DEVICES SHALL BE MOVED TO THE SHOULDER EDGE.

6. WHERE THE WORK ZONE IS STATIONARY, THE W20-7 (500 FT.) SIGN OR THE W20-7A SIGN TOGETHER WITH THE W20-7 (500 FT.) SUPPLEMENTAL PLATE SHOULD BE USED TO INDICATE THE DISTANCE TO THE FLAGGER.

| DATE | REVISION | BY |
|---|---|---|
| | | |

MISSISSIPPI DEPARTMENT OF TRANSPORTATION
ROADWAY DESIGN DIVISION
STANDARD PLAN

# TRAFFIC CONTROL PLAN WITH FLAGGER
## (ONE-LANE CLOSURE OF TWO-WAY TRAFFIC)

ENGLISH

WORKING NUMBER TCP-1

ISSUE DATE: OCTOBER 1, 1998

SHEET NUMBER 6250

| STATE | PROJECT NO. |
|---|---|
| MISS. | |

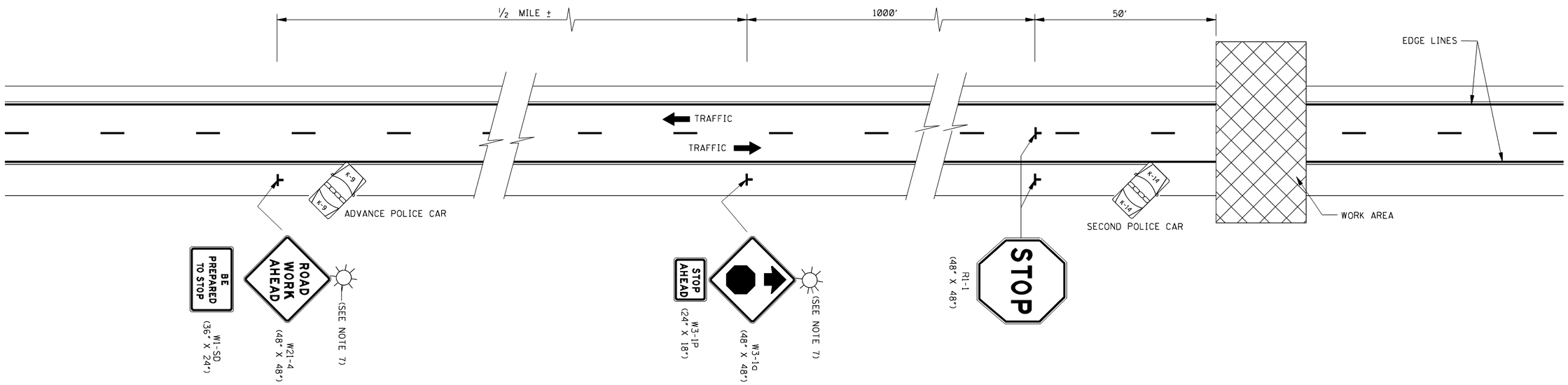


GENERAL NOTES:

1. THIS TYPE OF HIGHWAY CLOSURE SHALL ONLY BE USED FOR EMERGENCIES OR FOR CONSTRUCTION OPERATIONS WHEN THE DURATION OF CLOSURE WILL NOT EXCEED 30 MINUTES. AFTER THE HIGHWAY HAS BEEN CLOSED AND REOPENED VIA THIS PROCEDURE, A MINIMUM PERIOD OF 30 MINUTES SHALL ELAPSE BEFORE ANOTHER SHORT DURATION CLOSURE, EXCEPT WITH THE APPROVAL OF THE ENGINEER.

2. AT LEAST TWO POLICEMEN AND TWO POLICE CARS SHALL BE PROVIDED ON EACH APPROACH TO THE CLOSURE. EACH POLICE CAR SHALL HAVE A ROOF MOUNTED ROTATING BLUE LIGHT OR LIGHT BAR.

3. ROAD CLOSURES ARE NOT PERMITTED ON HOLIDAYS OR BETWEEN THE HOURS OF 6 AM TO 9 AM, 11 AM TO 1 PM AND 3 PM TO 6 PM ON MONDAY THROUGH FRIDAY, EXCEPT BY PERMISSION OF THE ENGINEER.

4. THE ADVANCE POLICE CAR AND THE "W21-4 (48" X 48")", "W1-SD (36" X 24")", "W3-1a (48" X 48")", AND "W3-1P (24" X 18")" SIGNS SHALL BE MOVED BACK AS REQUIRED BY THE QUEUING OF STOPPED VEHICLES.

5. TRAFFIC CONTROL FOR THE CLOSURE SHALL BE ACCOMPLISHED IN THE FOLLOWING ORDER:
   A. ADVANCE POLICE CAR, LIGHTS AND FLASHERS ON.
   B. "W21-4 (48" X 48")" AND "W1-SD (36" X 24")" SIGNS ERECTED.
   C. "W3-1a (48" X 48")" AND "W3-1P (24" X 18")" SIGNS ERECTED.
   D. SECOND POLICE CAR, LIGHTS AND FLASHERS ON.
   E. "R1-1 (48" X 48")" SIGNS ERECTED TO STOP TRAFFIC. THE ORDER OF ERECTION SHALL BE IN THE FOLLOWING ORDER: RIGHT SHOULDER THEN CENTER.

6. TRAFFIC CONTROL SHALL BE REMOVED IN THE FOLLOWING ORDER:
   A. WITH TRAFFIC STOPPED REMOVE THE "R1-1 (48" X 48")" SIGNS TOWARD THE RIGHT SHOULDER IN THE FOLLOWING ORDER: CENTER THEN SIGN ON THE RIGHT SHOULDER.
   B. AFTER ALL STOPPED VEHICLES HAVE STARTED MOVING, THE "W3-1a (48" X 48")" AND "W3-1P (24" X 18")" SIGNS SHALL BE REMOVED. THESE SIGNS MAY BE COVERED IF RE-USE IS IMMINENT.
   C. AFTER ALL CARS HAVE RESUMED APPROXIMATELY NORMAL SPEED, THE "W21-4 (48" X 48")" AND "W1-SD (36" X 24")" SIGNS SHALL BE REMOVED. THESE SIGNS MAY BE COVERED IF RE-USE IS IMMINENT.

7. UNILLUMINATED SECTIONS OF HIGHWAYS SHALL NOT BE CLOSED DURING HOURS OF DARKNESS EXCEPT FOR EMERGENCIES OR WITH THE APPROVAL OF THE ENGINEER. WHEN THE HIGHWAY MUST BE CLOSED DURING HOURS OF DARKNESS, A TYPE B HIGH INTENSITY FLASHING BARRICADE WARNING LIGHT SHALL BE USED ON EACH W21-4 AND W3-1a SIGN.

8. IF AN ENTRANCE RAMP IS LOCATED BETWEEN THE W21-4 AND R1-1, THE "W21-4 (48" X 48")", "W1-SD (36" X 24")", "W3-1a (48" X 48")", AND "W3-1P (24" X 18")" SIGNS SHALL ALSO BE ERECTED ON THE RAMP SHOULDER.

9. SIGN "W1-SD (36" X 24")" IS 4" SERIES "C" BLACK LEGEND AND BORDER ON ORANGE BACKGROUND.

10. ALL TRAFFIC CONTROL ITEMS SHOWN ON THIS SHEET WILL NOT BE MEASURED FOR SEPARATE PAYMENT. THIS WORK IS TO BE INCLUDED IN THE PRICE BID FOR MAINTENANCE OF TRAFFIC, INCLUDING SECURING POLICE SERVICES.

11. THE ABOVE DURATION WILL APPLY TO EACH APPROACH TO THE CLOSURE.

| DATE | REVISION | BY |
|---|---|---|
| | | |

MISSISSIPPI DEPARTMENT OF TRANSPORTATION
ROADWAY DESIGN DIVISION
STANDARD PLAN

# SHORT DURATION CLOSING OF TWO-LANE TWO-WAY HIGHWAYS

ENGLISH

WORKING NUMBER TCP-8

ISSUE DATE: OCTOBER 1, 1998

SHEET NUMBER 6257

| STATE | PROJECT NO. |
|---|---|
| MISS. | |

## MOBILE OPERATIONS ON MULTILANE ROAD △1

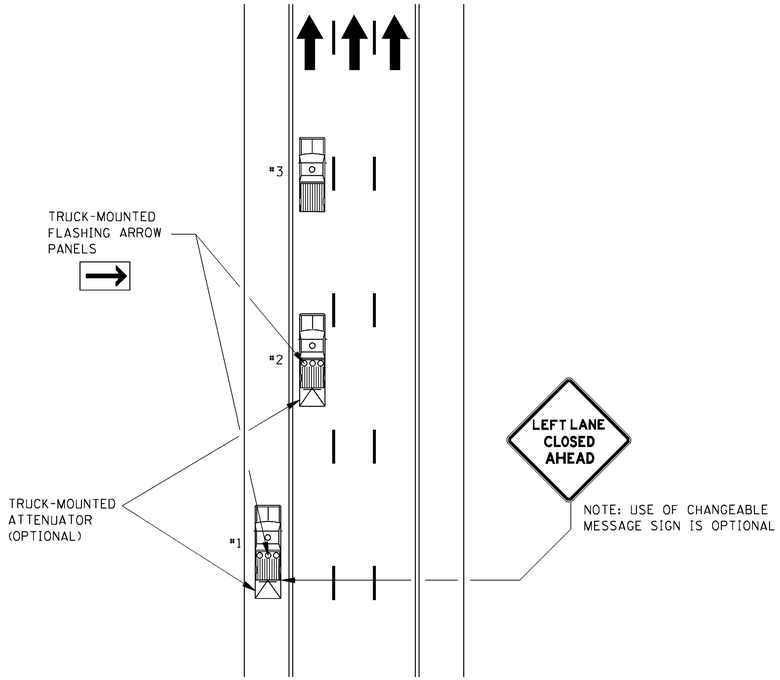


MOBILE OPERATIONS ON MULTILANE ROAD

## MOBILE OPERATIONS ON TWO–LANE ROAD

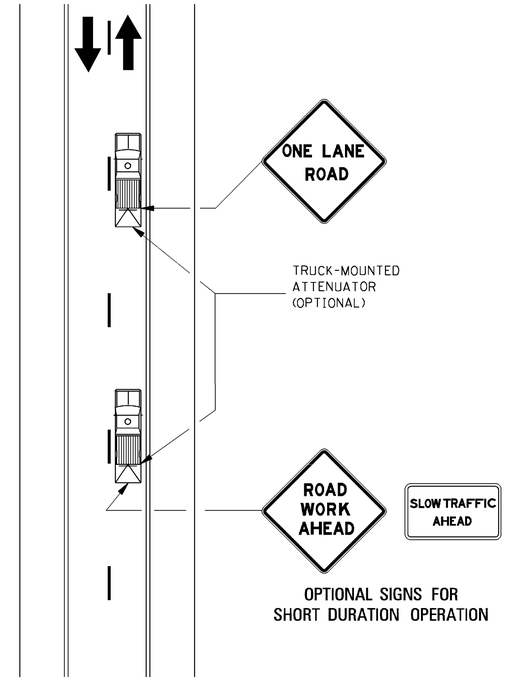


OPTIONAL SIGNS FOR SHORT DURATION OPERATION

MOBILE OPERATIONS ON TWO–LANE ROAD

NOTES:

1. VEHICLES USED FOR THESE OPERATIONS SHOULD BE MADE HIGHLY VISIBLE WITH APPROPRIATE EQUIPMENT, SUCH AS FLASHING LIGHTS, ROTATING BEACONS, FLAGS, SIGNS, OR ARROW PANELS.
2. PROTECTION VEHICLE #1 SHOULD BE EQUIPPED WITH AN ARROW PANEL. AN APPROPRIATE LANE CLOSURE SIGN SHOULD BE PLACED ON PROTECTION VEHICLE #1 SO AS NOT TO OBSCURE THE ARROW PANEL.
3. PROTECTION VEHICLE #2 SHOULD BE EQUIPPED WITH AN ARROW PANEL AND TRUCK-MOUNTED ATTENUATOR (TMA).
4. PROTECTION VEHICLE #1 SHOULD TRAVEL AT A VARYING DISTANCE FROM THE WORK OPERATION SO AS TO PROVIDE ADEQUATE SIGHT DISTANCE FOR TRAFFIC APPROACHING FROM THE REAR.
5. WHEN ADEQUATE SHOULDER WIDTH IS NOT AVAILABLE, PROTECTION VEHICLE #1 SHOULD BE ELIMINATED.
6. ON HIGH-SPEED ROADWAYS, A THIRD PROTECTION VEHICLE SHOULD BE USED (i.e., VEHICLE #1 ON THE SHOULDER (IF PRACTICAL), VEHICLE #2 IN THE CLOSED LANE, AND VEHICLE #3 IN THE CLOSED LANE).
7. ARROW PANELS SHALL BE AS A MINIMUM TYPE B, 60" X 30" IN ACCORDANCE WITH THE CRITERIA PRESENTED IN THE MUTCD.
8. WORK SHOULD NORMALLY BE DONE DURING OFF-PEAK HOURS.
9. ALL TRAFFIC CONTROL ITEMS SHOWN ON THIS SHEET WILL NOT BE MEASURED FOR SEPARATE PAYMENT. THIS WORK IS TO BE INCLUDED IN THE PRICE BID FOR MAINTENANCE OF TRAFFIC.

NOTES:

1. WHERE PRACTICAL AND WHEN NEEDED, THE WORK AND PROTECTION VEHICLES SHOULD PULL OVER PERIODICALLY TO ALLOW TRAFFIC TO PASS. IF THIS CAN NOT BE DONE FREQUENTLY, AS AN ALTERNATIVE, A "DO NOT PASS" SIGN MAY BE PLACED ON THE REAR OF THE VEHICLE BLOCKING THE LANE.
2. THE DISTANCE BETWEEN THE WORK AND PROTECTION VEHICLES MAY VARY ACCORDING TO TERRAIN, PAINT DRYING TIME, AND OTHER FACTORS. PROTECTION VEHICLES ARE USED TO WARN TRAFFIC OF THE OPERATION AHEAD. WHENEVER ADEQUATE STOPPING SIGHT DISTANCE EXISTS TO THE REAR, THE PROTECTION VEHICLE SHOULD MAINTAIN THE MINIMUM DISTANCE AND PROCEED AT THE SAME SPEED AS THE WORK VEHICLE. THE PROTECTION VEHICLE SHOULD SLOW DOWN IN ADVANCE OF VERTICAL OR HORIZONTAL CURVES THAT RESTRICT SIGHT DISTANCE.
3. ADDITIONAL PROTECTION VEHICLES TO WARN AND REDUCE THE SPEED OF ONCOMING OR OPPOSING TRAFFIC MAY BE USED. POLICE PATROL CARS MAY BE USED FOR THIS PURPOSE.
4. A TRUCK-MOUNTED ATTENUATOR (TMA) SHOULD BE USED ON THE PROTECTION VEHICLE AND MAY BE USED ON THE WORK VEHICLE.
5. THE WORK VEHICLE SHALL BE EQUIPPED WITH BEACONS, AND THE PROTECTION VEHICLES SHALL BE EQUIPPED WITH TWO HIGH-INTENSITY FLASHING LIGHTS MOUNTED ON THE REAR, ADJACENT TO THE SIGN. PROTECTION AND WORK VEHICLES SHOULD DISPLAY FLASHING OR ROTATING BEACONS BOTH FORWARD AND TO THE REAR.
6. VEHICLE-MOUNTED SIGNS SHALL BE MOUNTED WITH THE BOTTOM OF THE SIGN LOCATED AT A MINIMUM HEIGHT OF 48" ABOVE THE PAVEMENT. SIGN LEGENDS SHALL BE COVERED OR TURNED FROM VIEW WHEN WORK IS NOT IN PROGRESS.
7. ALL TRAFFIC CONTROL ITEMS SHOWN ON THIS SHEET WILL NOT BE MEASURED FOR SEPARATE PAYMENT. THIS WORK IS TO BE INCLUDED IN THE PRICE BID FOR MAINTENANCE OF TRAFFIC.

| DATE | REVISION | BY |
|---|---|---|
| 12-1-99 | REVISED CAPTION | S.W.R. |

△1

MISSISSIPPI DEPARTMENT OF TRANSPORTATION
ROADWAY DESIGN DIVISION
STANDARD PLAN

# TRAFFIC CONTROL PLAN MOBILE OPERATIONS MULTILANE ROADS AND TWO–LANE ROADS

ENGLISH
DEPARTMENT OF TRANSPORTATION MISSISSIPPI

WORKING NUMBER TCP-11

ISSUE DATE: OCTOBER 1, 1998

SHEET NUMBER 6260

| STATE | PROJECT NO. |
|---|---|
| MISS. | |

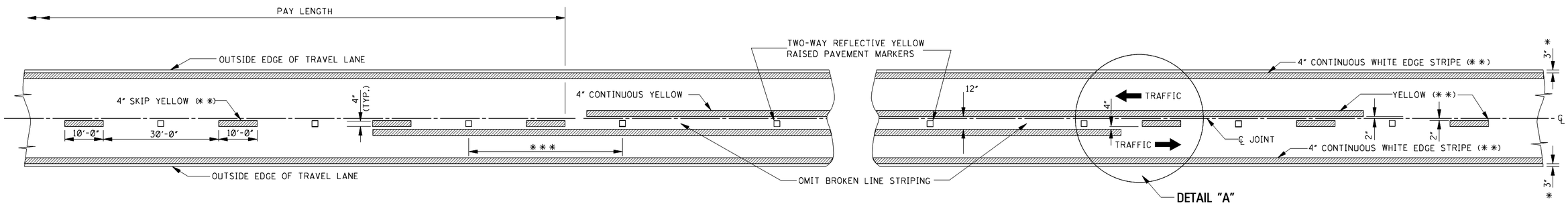


## TWO–WAY TRAFFIC
(ASPHALT OR CONCRETE PAVEMENT)

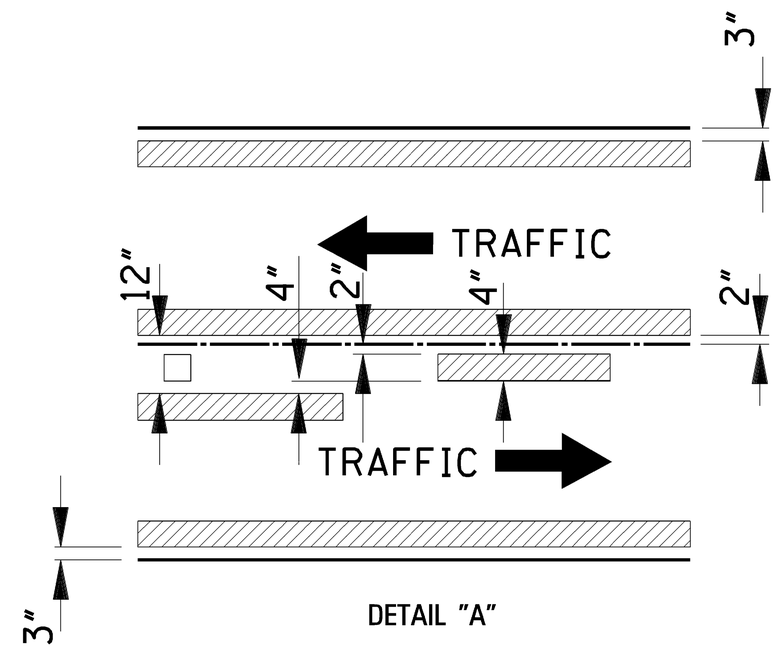


DETAIL "A"

DIRECTION OF TRAFFIC

GENERAL NOTES:

* 1. 3" UNLESS SHOWN ELSEWHERE ON THE PLANS.

** 2. EDGE STRIPE SHALL BE SAME MATERIAL AS LANE-LINE STRIPE (PAINT OR TAPE AS INDICATED IN PAY ITEMS).

*** 3. SPACING OF REFLECTIVE RAISED PAVEMENT MARKERS IS AS FOLLOWS:

| | URBAN AREA (ft-in) | RURAL AREA (ft-in) |
|---|---|---|
| TANGENT SECTIONS | 40'-0" | 80'-0" |
| HORIZONTAL CURVES | 40'-0" | 40'-0" |
| INTERCHANGE LIMITS | 40'-0" | † 40'-0" |

† NOTE: ON THE MAIN FACILITY, REFLECTIVE RED-CLEAR RAISED PAVEMENT MARKERS ON A 40'-0" SPACING WILL BE REQUIRED ON LANE-LINE(S) THROUGH ALL INTERCHANGE AREAS BEGINNING 1000' IN ADVANCE (IN DIRECTION OF TRAFFIC) OF THE EXIT RAMP TAPER AND CONTINUING THROUGH THE INTERCHANGE TO THE END OF THE ENTRANCE RAMP TAPER.

4. PAVEMENT MARKERS SHALL BE HIGH PERFORMANCE REFLECTIVE RAISED PAVEMENT MARKERS AS LISTED IN THE MDOT "APPROVED SOURCES OF MATERIALS."

5. REFLECTIVE RAISED PAVEMENT MARKERS TO BE USED IF TEMPORARY MARKINGS ARE TO REMAIN IN PLACE OVER 3 MONTHS

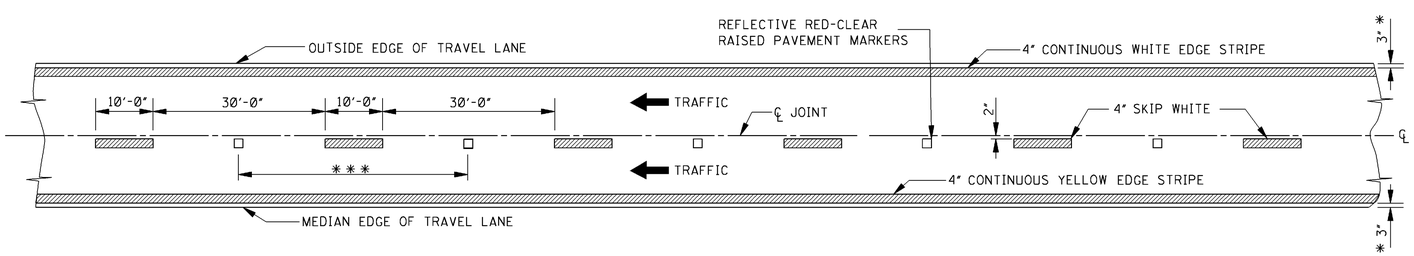


## 4–LANE WITH ONE–WAY TRAFFIC

| DATE | REVISION | BY |
|---|---|---|
| | | |

MISSISSIPPI DEPARTMENT OF TRANSPORTATION
ROADWAY DESIGN DIVISION
STANDARD PLAN

**TEMPORARY STRIPING FOR TRAFFIC CONTROL 2–LANE AND 4–LANE DIVIDED HIGHWAYS**

ENGLISH

WORKING NUMBER TCP-15

ISSUE DATE: DECEMBER 1, 1999

SHEET NUMBER 6264

| STATE | PROJECT NO. |
|---|---|
| MISS. | |

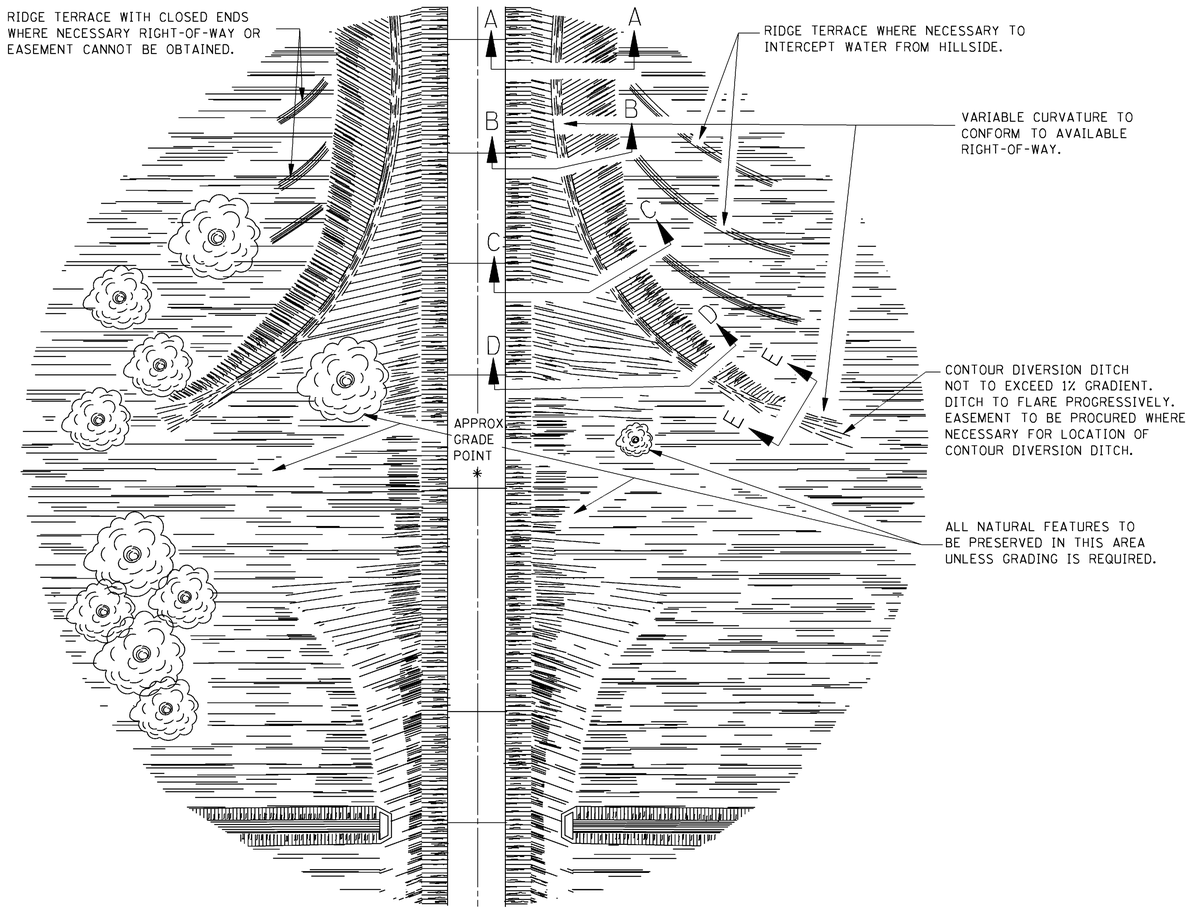


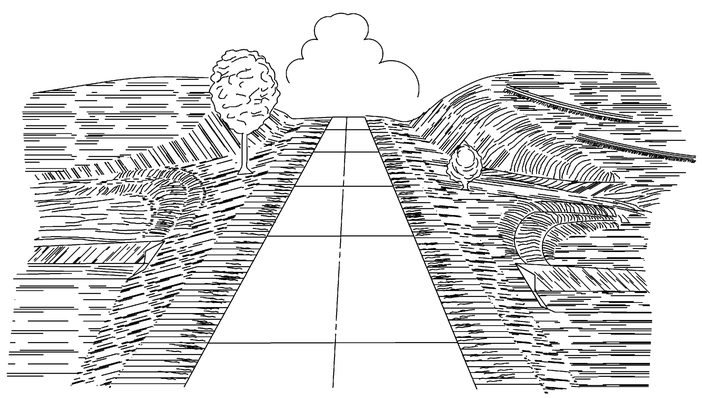

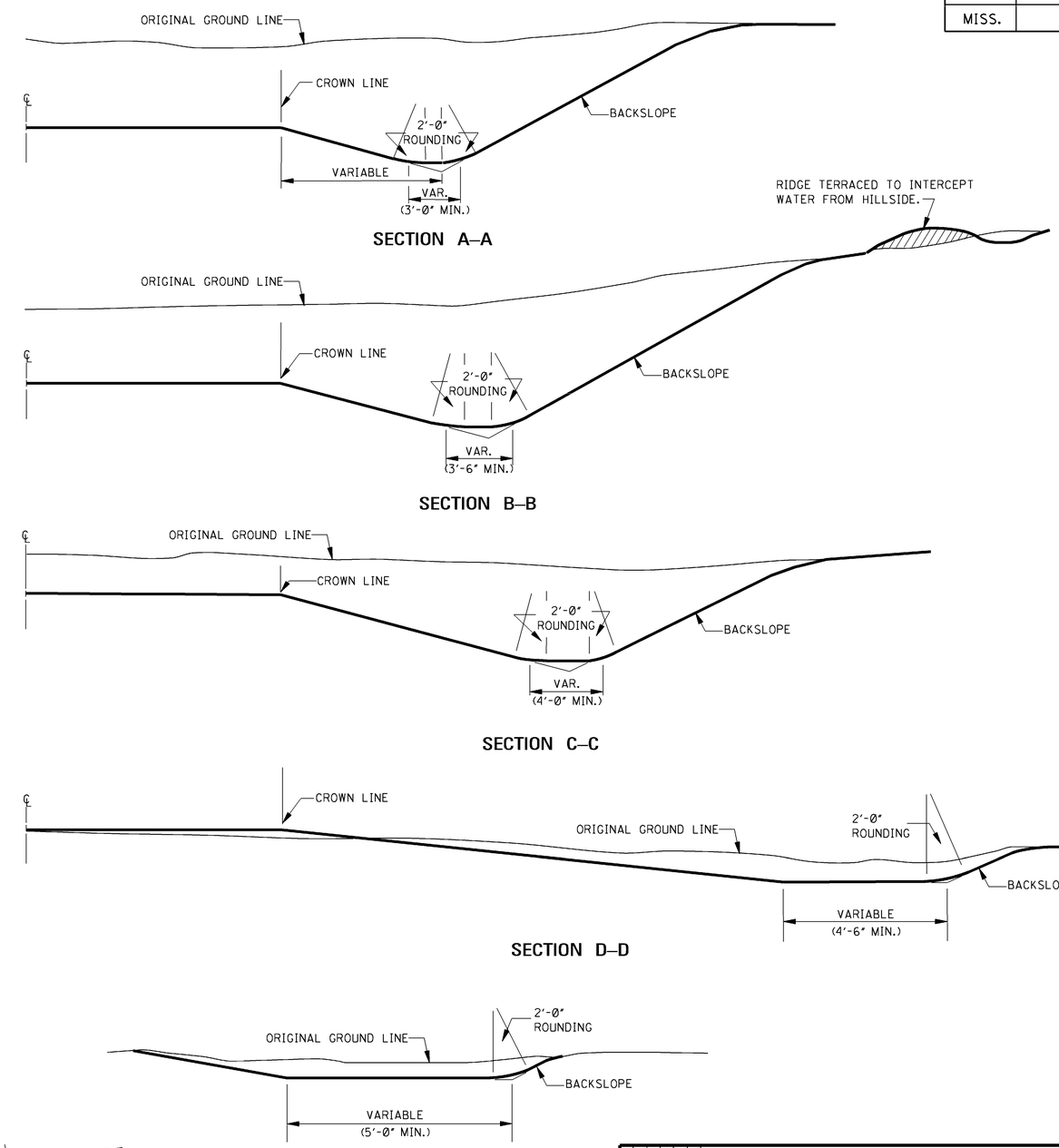


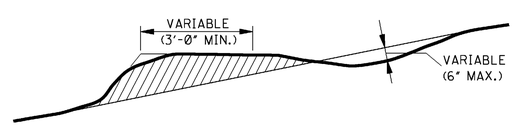


## RIDGE TERRACE

NOTE: RIDGE TERRACES SHALL BE SPACED 4'-0" VERTICALLY ON SLOPES STEEPER THAN 3:1 AND 3'-0" VERTICALLY ON SLOPES FLATTER THAN 3:1. TERRACES ARE TO BE USED WHERE NECESSARY TO INTERCEPT WATER FROM HILLSIDES.

| DATE | REVISION | BY |
|---|---|---|
| | | |

MISSISSIPPI DEPARTMENT OF TRANSPORTATION
ROADWAY DESIGN DIVISION
STANDARD PLAN

# TYPICAL GRADING TRANSITION BETWEEN CUTS AND FILLS

ENGLISH

WORKING NUMBER GT-1

ISSUE DATE: OCTOBER 1, 1998

SHEET NUMBER 6272

| STATE | PROJECT NO. |
|---|---|
| MISS. | |

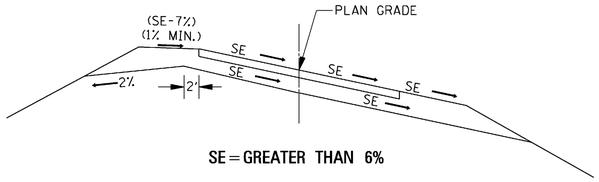


SE = GREATER THAN 6%

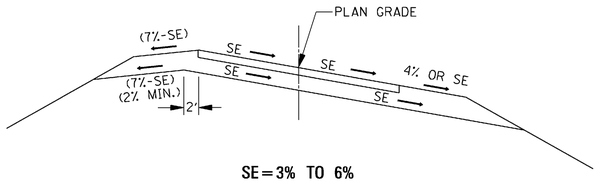


SE = 3% TO 6%

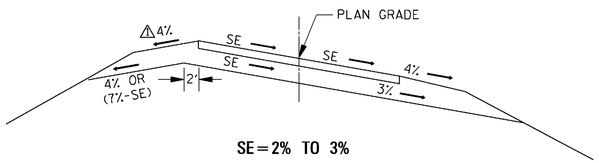


SE = 2% TO 3%

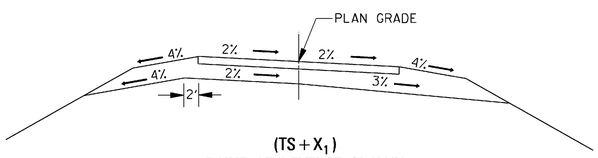


(TS + $X_1$)
POINT OF REVERSE CROWN

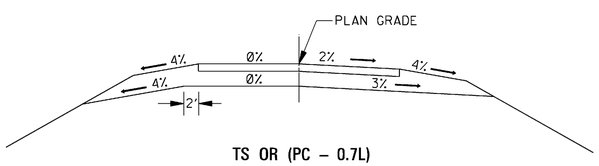


TS OR (PC – 0.7L)

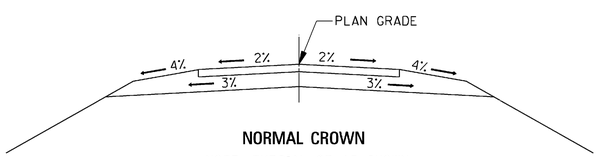


NORMAL CROWN

NOTE: TYPCIAL, OR AS SHOWN ELSEWHERE ON PLANS.

## DETAILS OF SHOULDER & SUBGRADE TREATMENT

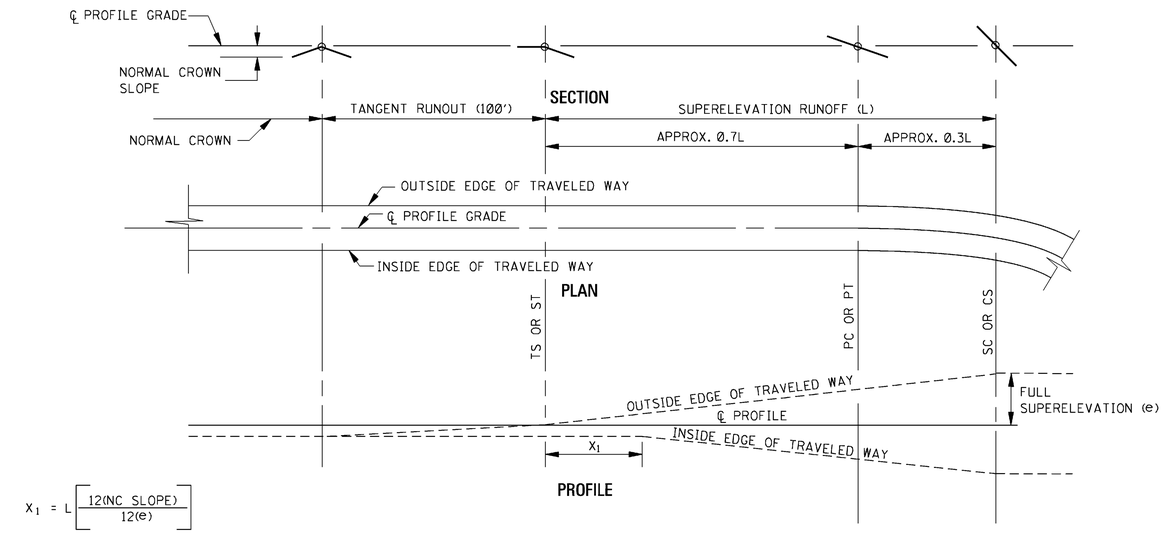


$$X_1 = L\left[\frac{12(\text{NC SLOPE})}{12(e)}\right]$$

## DIAGRAMMATIC PLAN AND PROFILE

| *D | V = 30 mph | | | V = 40 mph | | | V = 50 mph | | | V = 55 mph | | | V = 60 mph | | | V = 65 mph | | | V = 70 mph | | |
|---|---|---|---|---|---|---|---|---|---|---|---|---|---|---|---|---|---|---|---|---|---|
| | e | L(ft) | | e | L(ft) | | e | L(ft) | | e | L(ft) | | e | L(ft) | | e | L(ft) | | e | L(ft) | |
| | | A | B | | A | B | | A | B | | A | B | | A | B | | A | B | | A | B |
| 0°15′ | NC | 0 | 0 | NC | 0 | 0 | NC | 0 | 0 | NC | 0 | 0 | NC | 0 | 0 | NC | 0 | 0 | NC | 0 | 0 |
| 0°30′ | NC | 0 | 0 | NC | 0 | 0 | NC | 0 | 0 | NC | 0 | 0 | RC | 175 | 175 | RC | 190 | 190 | RC | 200 | 200 |
| 0°45′ | NC | 0 | 0 | NC | 0 | 0 | RC | 150 | 150 | RC | 160 | 160 | .023 | 175 | 175 | .025 | 190 | 190 | .028 | 200 | 200 |
| 1°00′ | NC | 0 | 0 | NC | 0 | 0 | .021 | 150 | 150 | .025 | 160 | 160 | .030 | 175 | 175 | .033 | 190 | 190 | .037 | 200 | 200 |
| 1°30′ | NC | 0 | 0 | .021 | 125 | 125 | .031 | 150 | 150 | .037 | 160 | 160 | .043 | 175 | 190 | .048 | 190 | 220 | .054 | 200 | 260 |
| 2°00′ | RC | 100 | 100 | .028 | 125 | 125 | .040 | 150 | 150 | .048 | 160 | 180 | .055 | 175 | 230 | .062 | 190 | 290 | .070 | 220 | 330 |
| 2°30′ | .021 | 100 | 100 | .034 | 125 | 125 | .049 | 150 | 180 | .056 | 160 | 210 | .067 | 190 | 280 | .075 | 220 | 330 | .085 | 260 | 390 |
| 3°00′ | .025 | 100 | 100 | .040 | 125 | 125 | .057 | 150 | 210 | .067 | 170 | 250 | .077 | 210 | 320 | .087 | 250 | 380 | .096 | 280 | 420 |
| 3°30′ | .029 | 100 | 100 | .046 | 125 | 140 | .065 | 160 | 240 | .075 | 190 | 290 | .086 | 230 | 350 | .095 | 270 | 400 | .100 | 300 | 450 |
| 4°00′ | .033 | 100 | 100 | .051 | 125 | 160 | .072 | 180 | 260 | .083 | 210 | 320 | .093 | 250 | 380 | .099 | 280 | 420 | $D_{max}$ = 3°30′ | | |
| 5°00′ | .040 | 100 | 110 | .061 | 130 | 190 | .083 | 200 | 300 | .094 | 240 | 360 | .098 | 270 | 400 | $D_{max}$ = 4°15′ | | | | | |
| 6°00′ | .046 | 100 | 120 | .070 | 150 | 220 | .092 | 220 | 330 | .099 | 250 | 380 | $D_{max}$ = 5°15′ | | | | | | | | |
| 7°00′ | .053 | 100 | 140 | .078 | 160 | 240 | .098 | 240 | 350 | $D_{max}$ = 6°30′ | | | | | | | | | | | |
| 8°00′ | .058 | 110 | 160 | .084 | 180 | 260 | .100 | 240 | 360 | | | | | | | | | | | | |
| 9°00′ | .063 | 120 | 170 | .089 | 190 | 280 | $D_{max}$ = 8°15′ | | | | | | | | | | | | | | |
| 10°00′ | .068 | 120 | 180 | .094 | 200 | 290 | | | | | | | | | | | | | | | |
| 11°00′ | .072 | 130 | 200 | .097 | 200 | 310 | | | | | | | | | | | | | | | |
| 12°00′ | .076 | 140 | 210 | .099 | 210 | 310 | | | | | | | | | | | | | | | |
| 13°00′ | .080 | 140 | 220 | .100 | 210 | 320 | | | | | | | | | | | | | | | |
| 14°00′ | .083 | 150 | 220 | $D_{max}$ = 13°15′ | | | | | | | | | | | | | | | | | |
| 16°00′ | .089 | 160 | 240 | | | | | | | | | | | | | | | | | | |
| 18°00′ | .093 | 170 | 250 | | | | | | | | | | | | | | | | | | |
| 20°00′ | .097 | 170 | 260 | | | | | | | | | | | | | | | | | | |
| 22°00′ | .099 | 180 | 270 | | | | | | | | | | | | | | | | | | |
| 24°00′ | .100 | 180 | 270 | | | | | | | | | | | | | | | | | | |
| | $D_{max}$ = 24°45′ | | | | | | | | | | | | | | | | | | | | |

$e_{max}$ = 10%

KEY:

D = DEGREE OF CURVE
V = DESIGN SPEED (mph)
e = FULL SUPERELEVATION RATE (%)
L = MINIMUM LENGTH OF SUPERELEVATION RUNOFF (FROM ADVERSE CROWN REMOVED TO FULL SUPER) (ft)
A = "L" FOR 1-LANE WIDTH OF ROTATION
B = "L" FOR 2-LANE WIDTH OF ROTATION
NC = NORMAL CROWN (2% CROSS SLOPE)
RC = REVERSE CROWN; SUPERELEVATE AT NORMAL CROWN SLOPE (2%)

*NOTE: FOR DEGREES OF CURVE INTERMEDIATE BETWEEN TABLE VALUES, USE A STRAIGHT-LINE INTERPOLATION TO DETERMINE THE SUPERELEVATION RATE.

GENERAL NOTES:

1. STATE AID DIVISION: USE STANDARD SA-SE-1.
2. "L" IN THE TABLE IS FOR ROTATION ABOUT THE CENTERLINE OF 2 LANES ("A") AND 4 LANES ("B") OF TRAVELED WAYS (1 LANE AND 2 LANES EACH SIDE OF THE ROTATION POINT RESPECTIVELY). MINIMUM LENGTH OF RUNOFF FOR VARIOUS WIDTHS OF ROTATION ARE AS FOLLOWS:
   FOR ROTATING A WIDTH OF 3 TRAVEL LANES: L = (1.33)XL IN COLUMN B)
   FOR ROTATING A WIDTH OF 4 TRAVEL LANES: L = (1.67)XL IN COLUMN B)
3. SPIRAL TRANSITION CURVES SHOULD BE USED FOR THE LENGTH OF SUPERELEVATION RUNOFF FOR ALL CURVES IN THE TABLE BELOW THE HEAVY LINE (e > 5%).
4. A VERTICAL CURVE WITH A LENGTH (IN FEET) EQUAL TO THE DESIGN SPEED (IN mph) SHOULD BE PLACED AT EXCESSIVE ANGULAR BREAKS.

| DATE | REVISION | BY |
|---|---|---|
| 3-01-02 | REVISED SHOULDER SLOPE | S.W.R. |

MISSISSIPPI DEPARTMENT OF TRANSPORTATION
ROADWAY DESIGN DIVISION
STANDARD PLAN

# SUPERELEVATION TRANSITION CASE I ROTATION ABOUT CENTERLINE

**(3% NORMAL SUBGRADE)**

ENGLISH

WORKING NUMBER SE-2B

SHEET NUMBER 6277

ISSUE DATE: OCTOBER 1, 1998

| STATE | PROJECT NO. |
|---|---|
| MISS. | |

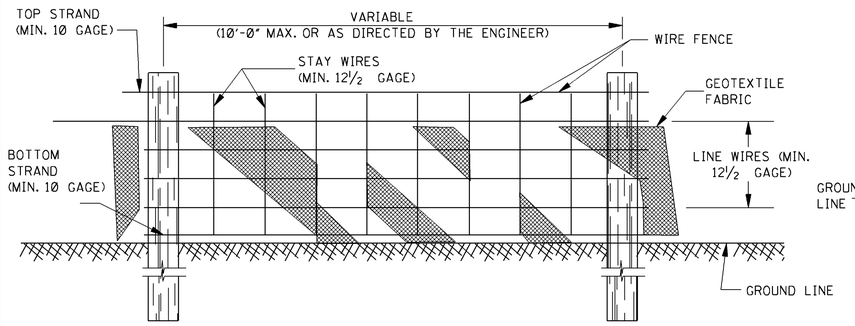


FRONT ELEVATION

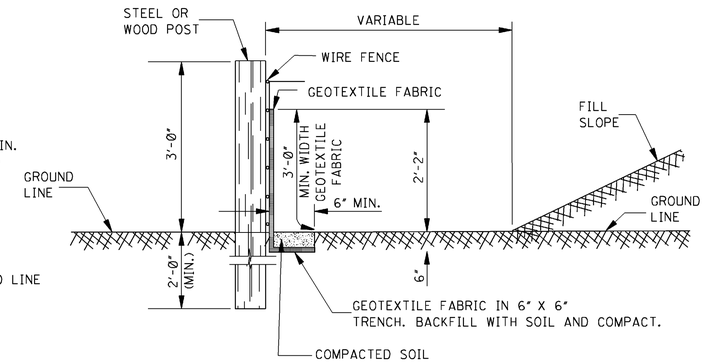


SIDE ELEVATION

## TEMPORARY SILT FENCE

NOTES:

1. WIRE SHALL BE MINIMUM OF 32" IN WIDTH AND SHALL HAVE A MINIMUM OF 6 LINE WIRES WITH 12" STAY SPACING.
2. GEOTEXTILE FABRIC SHALL BE A MINIMUM OF 36" IN WIDTH AND SHALL BE FASTENED ADEQUATELY TO THE WIRE AS DIRECTED BY THE ENGINEER.
3. STEEL POST SHALL BE 5'-0" IN HEIGHT AND OF THE SELF-FASTENER ANGLE STEEL TYPE. WOOD POST SHALL BE A MINIMUM OF 5'-0" IN HEIGHT AND 3" OR MORE IN DIAMETER. WIRE FENCE SHALL BE FASTENED TO WOODEN POST WITH NOT LESS THAN 9 GAGE WIRE STAPLES 1" LONG.
4. GEOTEXTILE FABRIC MEETING THE TYPE II MATERIAL REQUIREMENTS AND INSTALLED ACCORDING TO SPECIFICATIONS MAY BE USED WITHOUT WIRE FENCE.

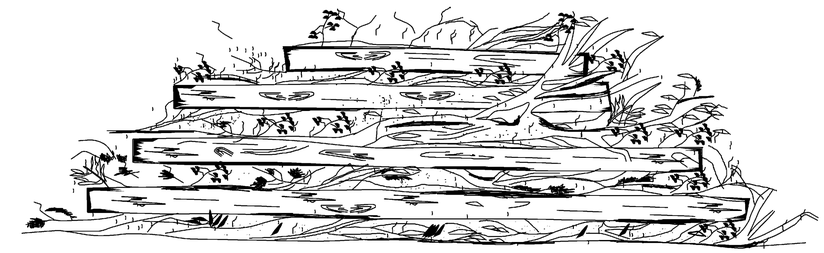

FRONT ELEVATION

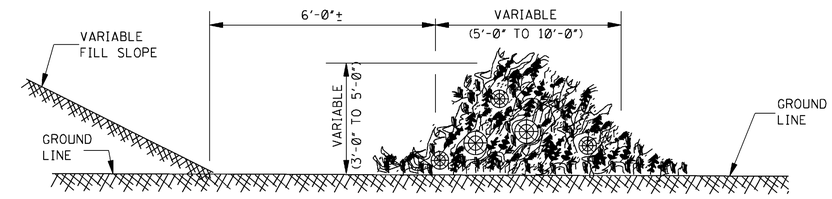


SIDE ELEVATION

## TEMPORARY BRUSH BARRIER

NOTES:

1. BRUSH BARRIER TO BE USED WHERE NATURAL GROUND IS LEVEL OR SLOPING AWAY FROM PROJECT.
2. PLACE BRUSH, LOG AND TREE LAPS APPROXIMATELY PARALLEL TO TOE OF FILL SLOPE WITH SOME OF THE HEAVIER MATERIALS BEING PLACED ON TOP TO PROPERLY SECURE THE BARRIER AS DETAILED AT LOCATIONS SHOWN ON PLANS OR AS DIRECTED BY THE ENGINEER.
3. TO ALLOW WATER TO FLOW THROUGH BRUSH BARRIER, INTERMINGLE THE BRUSH, LOG AND TREE LAPS SO AS NOT TO FORM A SOLID DAM.

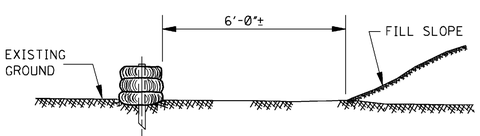


ELEVATION

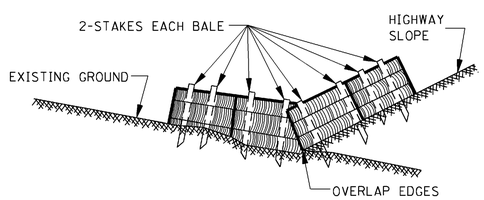


ELEVATION

NOTE: SIMILAR TREATMENT TO BE USED IN DITCHES.

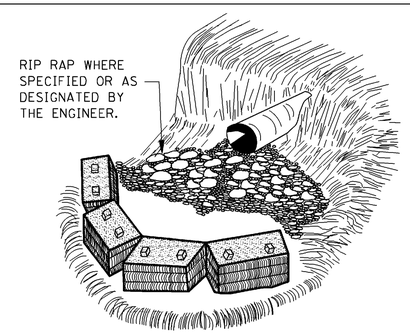


CULVERT

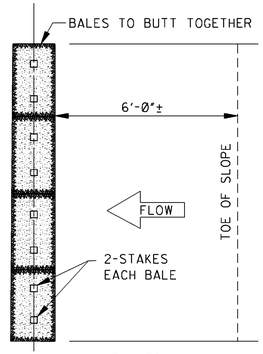


PLAN

| FALL OF DITCH (%) | DISTANCE* (ft) |
|---|---|
| 0 - 1 | 100' |
| 1 - 2 | 50' |
| >2 | 25' |

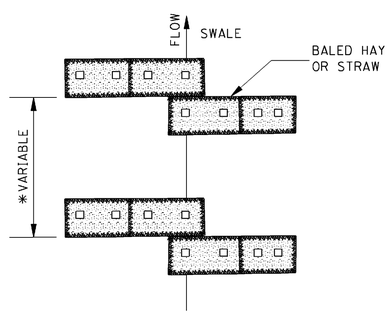


PLAN

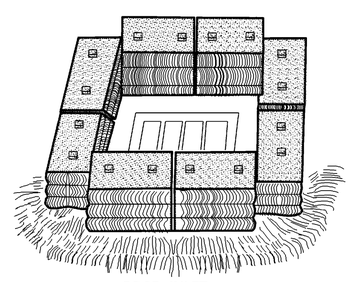

DROP INLET

## TEMPORARY EROSION CHECKS USING HAY OR STRAW BALES

NOTE: EMBED ALL BALES 3" MINIMUM INTO GROUND AND STAKE (2" X 2" X 36") SECURELY.

GENERAL NOTES:

1. THE CONTRACTOR SHALL BE REQUIRED TO FURNISH ALL MATERIALS AND PERFORM ALL WORK FOR THE PROPER INSTALLATION, MAINTENANCE AND REMOVAL OF TEMPORARY EROSION CONTROL MEASURES NECESSARY TO CONTROL SILTATION.
2. TEMPORARY BRUSH BARRIERS SHALL BE USED AS REQUIRED BUT WILL NOT BE MEASURED FOR SEPARATE PAYMENT.
3. THE USE OF TEMPORARY EROSION CONTROL MEASURES OTHER THAN TEMPORARY BRUSH BARRIERS WILL ONLY BE REQUIRED AND MEASURED FOR SEPARATE PAYMENT WHEN APPROPRIATE PAY ITEM(S) IS INCLUDED IN THE BID SCHEDULE OF THE PROPOSAL.

| DATE | REVISION | BY |
|---|---|---|
| | | |

MISSISSIPPI DEPARTMENT OF TRANSPORTATION
ROADWAY DESIGN DIVISION
STANDARD PLAN

**TYPICAL TEMPORARY EROSION CONTROL MEASURES**
**(SILT FENCE, HAY BALES & BRUSH BARRIER)**

ENGLISH

WORKING NUMBER TEC-1

ISSUE DATE: OCTOBER 1, 1998

SHEET NUMBER 6142

| STATE | PROJECT NO. |
|---|---|
| MISS. | |

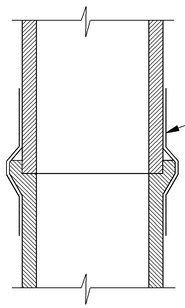


SECTION A–A

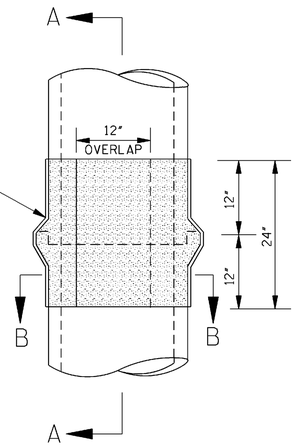


ELEVATION

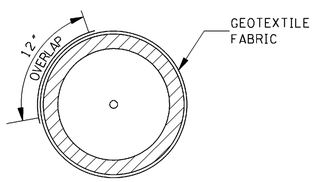


SECTION B–B

## STACKED PIPE JOINTS

NOTE: EACH STACKED PIPE JOINT SHALL BE WRAPPED WITH 24" WIDE TYPE V GEOTEXTILE FABRIC (AASHTO M 288). THE FABRIC SHALL OVERLAP A MINIMUM OF 12" AT THE WRAP AND SHALL BE SECURED WITH STRING OR WIRE AS APPROVED BY THE ENGINEER PRIOR TO BACKFILLING. THE COST FOR THE MATERIALS AND LABOR SHALL BE ABSORBED.

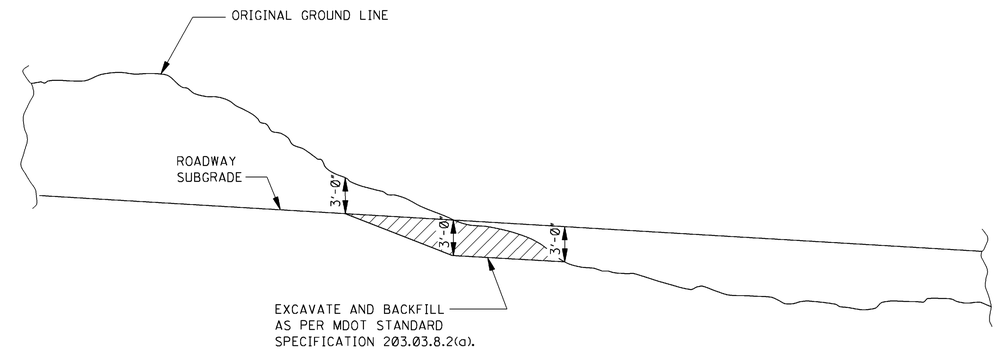


PROFILE SHOWING REQUIRED EXCAVATION AT GRADE POINTS

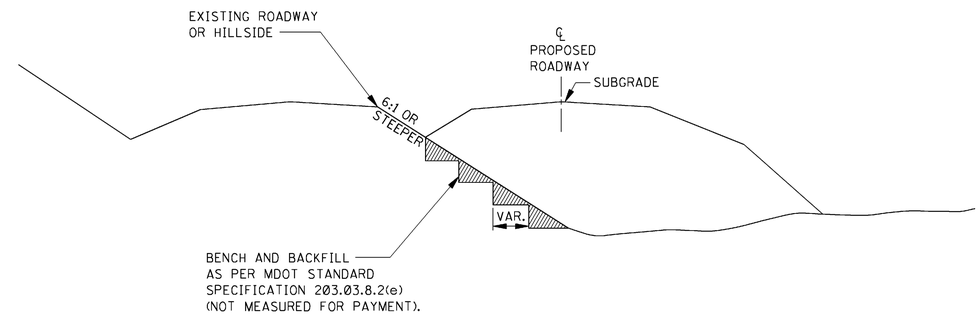


CROSS–SECTION SHOWING REQUIRED BENCHING
UNDER EMBANKMENTS ON STEEP SLOPES

## EXCAVATION AT GRADE POINTS

| DATE | REVISION | BY |
|---|---|---|
| | | |

MISSISSIPPI DEPARTMENT OF TRANSPORTATION
ROADWAY DESIGN DIVISION
STANDARD PLAN

**MISCELLANEOUS DETAIL SHEET**

1. STACKED PIPE JOINTS
2. EXCAVATION AT GRADE POINTS

ENGLISH

WORKING NUMBER
MDS-1

ISSUE DATE: OCTOBER 1, 1998

SHEET NUMBER
6290

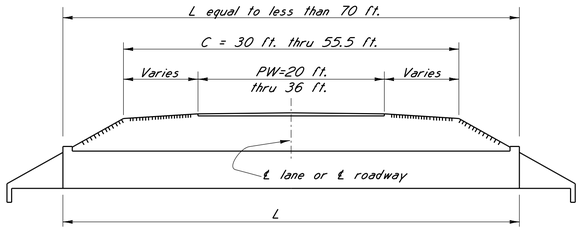


Diagram "A" - drawn for L = 60 ft. & PW = 24 ft.

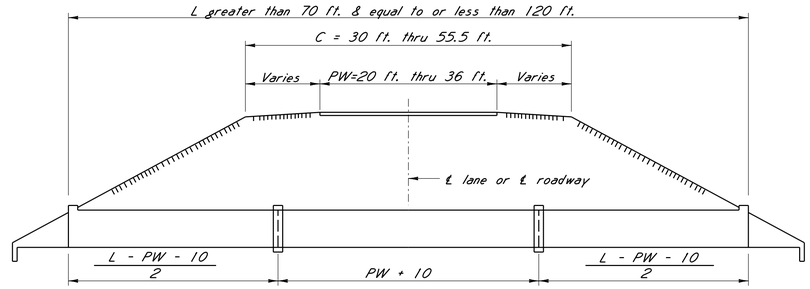


Diagram "B" - drawn for L = 90 ft. & PW = 24 ft.

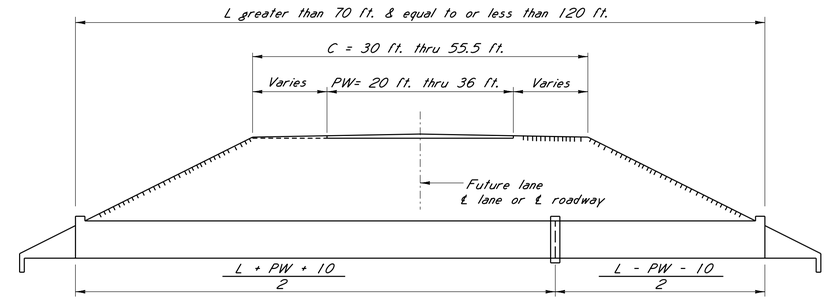


Diagram "C" - Drawn for L = 90 ft. & PW = 24 ft.

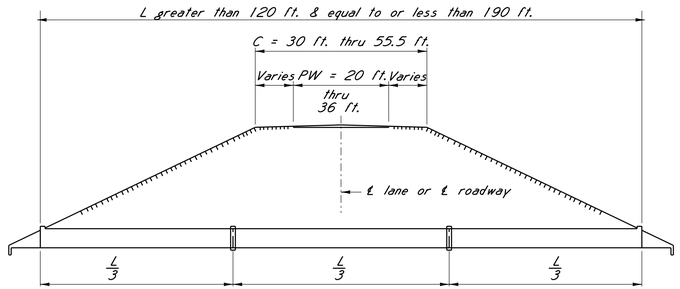


Diagram "D" - drawn for L = 150 ft. & PW = 24 ft.

NOTE: These collar locations are for culverts constructed normal to ℄ roadway and shall be adjusted for skew per details in group IV.

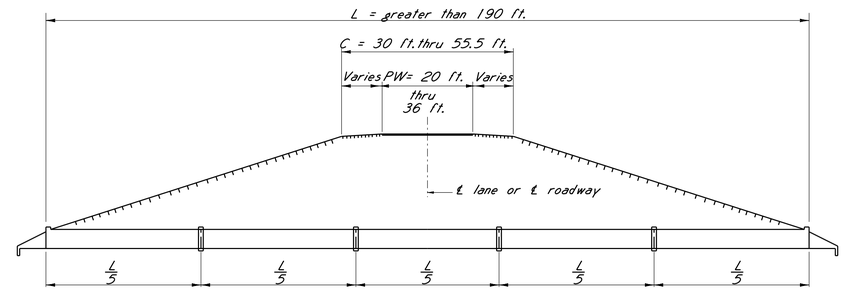


Diagram "E" - drawn for L = 200 ft. & PW = 24 ft.

## SIDE ELEVATION OF CULVERTS CONSTRUCTED NORMAL TO ℄ ROADWAY

Showing collar locations

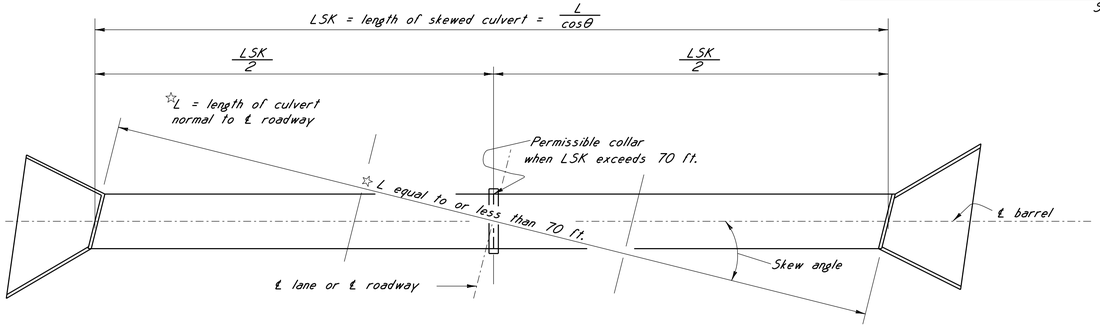


DIAGRAM "A"

PLAN OF SKEWED CULVERT

Typical for diagram "A" group I and skewed 15° right forward
(No collars required)
Note : LSK = 1.03528(L) for 15° skew.

## GENERAL NOTES:

This drawing shows collar locations for box culverts constructed normal to ℄ of roadway and general details necessary to locate collars for culverts on 15, 30 and 45° skews.
The diagrams on this sheet show collar locations for culverts under variable amounts of cover, crown width and side slopes.
Collars shall be placed only at locations shown unless otherwise stated.
Collars shall not be located closer than 5 ft. outside pavement for cover of 8 ft. or less except in cases where median is less than 10 ft. where cover exceeds 8 ft., collars may be located without regard to pavement edge.
Collar locations per group IV, if required, shall have reinforcement continuous thru collar and shall be placed only at locations indicated.
General requirements of basic culvert drawings shall apply except as specifically modified hereon.

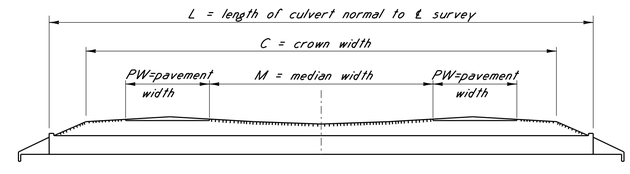


## SIDE ELEVATION OF CULVERTS CONSTRUCTED NORMAL TO ℄ SURVEY

Showing variable for diagrams in group I.

✱ NOTE: Group I : 2 or 3 - 10 ft. thru 12 ft. traffic lanes
or 2 - 12 ft. (present) & 1 - 12 ft. (future) traffic lanes

## GROUP IV DIAGRAMS
## TYPICAL DIAGRAMS FOR SKEWED CULVERTS

Application of diagrams:
The following diagrams show the general application of joint location diagrams in groups I, II & III to skewed culverts.
Location of barrel joints for skewed culverts is determined as follows:
1. With LSK (length of skewed culvert along ℄ barrel) given and number of joints and length of barrel sections required, multiply LSK by the cosine of the skew angle O to obtain L (length of culvert normal to ℄ roadway).
2. Enter group I, II or III (determined by roadway cross section) with L to determine the number of joints and length of each barrel section for a culvert constructed normal to ℄ roadway.
3. Divide each length of section by the cosine of the skew angle O to determine the length of each barrel section along ℄ barrel.
4. Place the barrel joints (type per basic dwg.) at these locations. if the length of any section exceeds 70 ft. and a construction joint is desired (to reduce yardage of pour) place a construction joint in center of section.

| | | |
|---|---|---|
| BY | MISSISSIPPI DEPARTMENT OF TRANSPORTATION | |
| REVISIONS | BASIC CULVERT DRAWING<br>COLLAR LOCATIONS<br>NORMAL AND SKEWED CULVERTS<br>GROUP I DIAGRAMS✱ | SHT. 1 OF 3 |
| | | WORKING NUMBER IBJL-1 |
| DATE | DESIGNER PAUL DEES, P.E. CHECKER PICKERING FIRM, INC.<br>DETAILER PAUL DEES, P.E. ISSUE DATE 1/1/2015<br>DIRECTOR OF STRUCTURES, STATE BRIDGE ENGINEER - JUSTIN WALKER PE.<br>DEP. DIR. OF STRUCTURES, ASST. STATE BRIDGE ENGINEER - SCOTT WESTERFIELD PE. | SHEET NUMBER 7005 |

DEPARTMENT OF TRANSPORTATION MDOT MISSISSIPPI

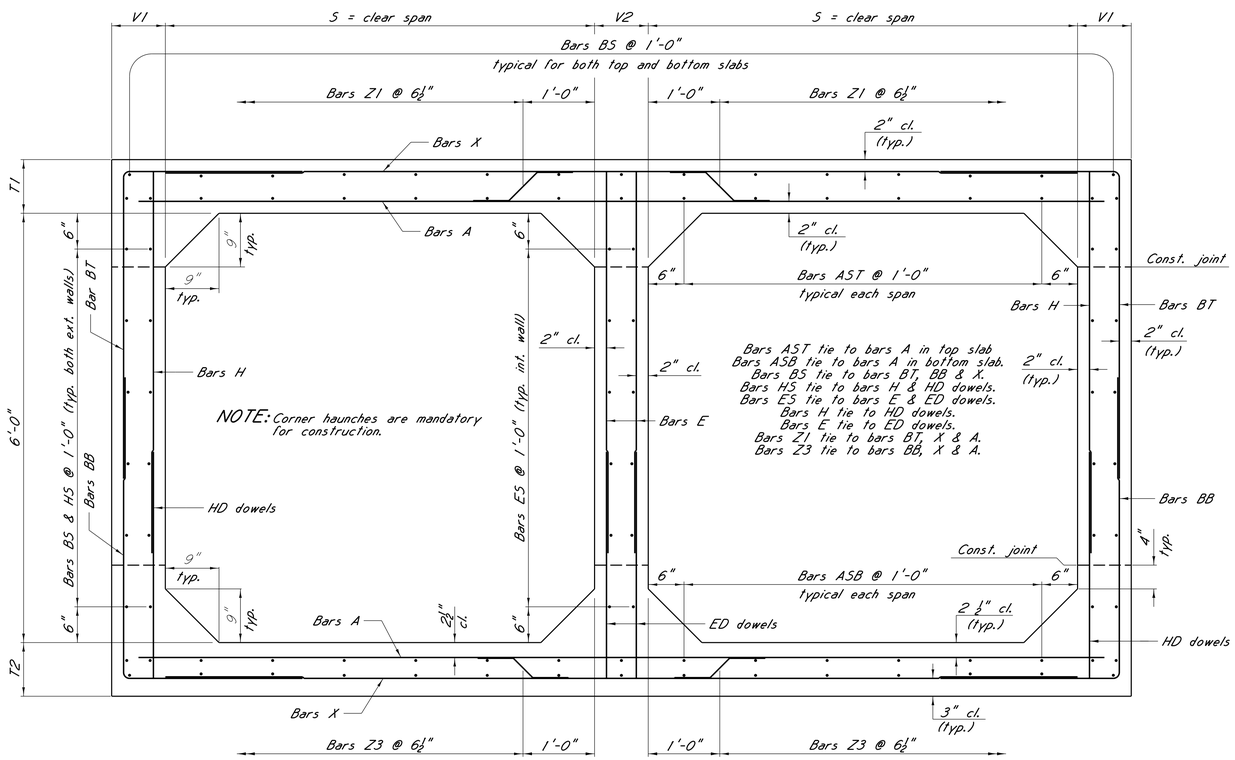


## CROSS SECTION

NOTE: Box culverts with less than 2'-6" cover will have to be designed individually.

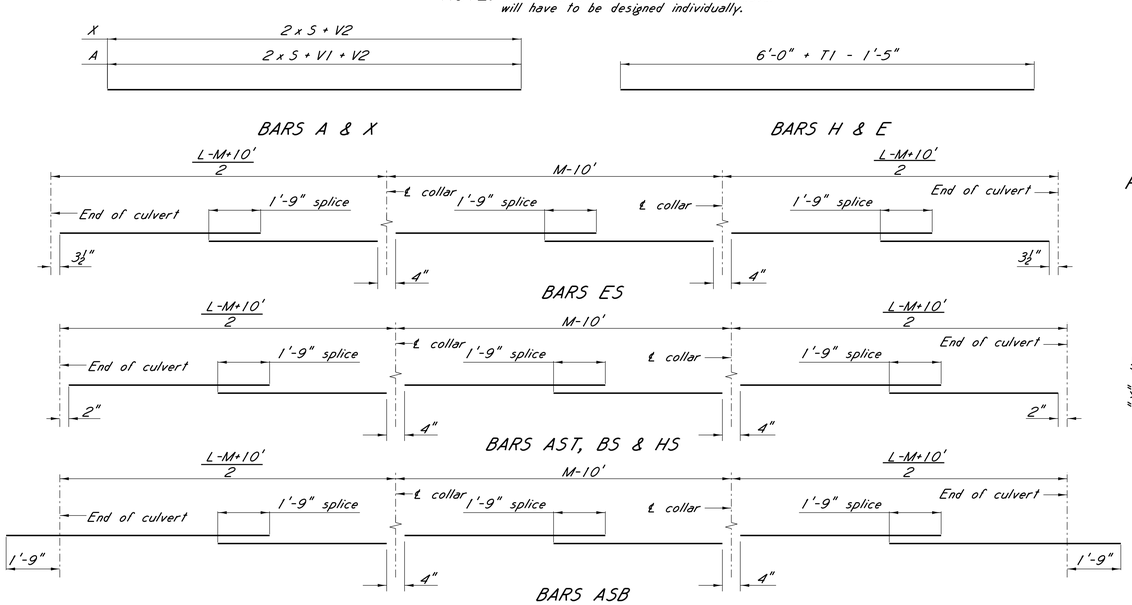


## BAR BENDING DETAILS

Dimensions are out to out

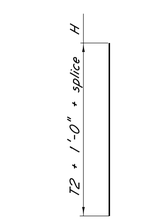


HD & ED DOWELS

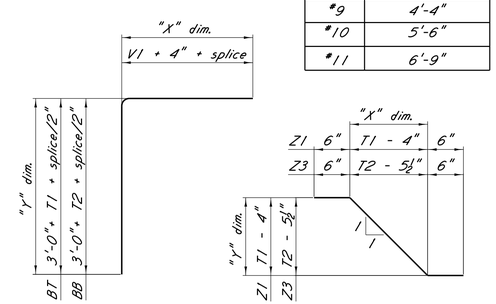


BARS BT & BB

BARS Zn

NOTE: The diagrams for bars ASB, AST, BS, HS & ES are for a culvert length greater than 140 ft. and equal to or less than 190 ft. with a median of 40 ft. thru 60 ft. for conditions other than these, use sections as shown on elevation of culvert.

NOTE: See basic drawing IBJL-1 for additional collar locations.

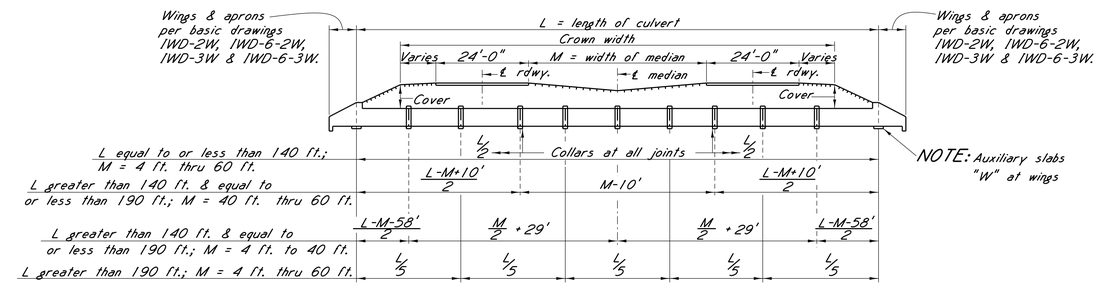


## SIDE ELEVATION OF CULVERT

Showing collar locations
Drawn for L=150 ft. and M=60 ft.

NOTE: Where cover is 8 ft. or less and a joint occurs within the limits of 5 ft. beyond each edge of pavement, use complete collar at joints per basic drawing ICJ-1 or ICJS-1.

NOTE: Joints shall not be located closer than 5 ft. outside of pavement for cover of 8 ft. or less except in the cases where median is less than 10 ft. where cover exceeds 8 ft. joints may be located without regards to pavement edge.

NOTE: For reinforcing required in parapet & wingwalls to be placed prior to barrel construction, see basic drawings IWD-2W, IWD-6-2W, IWD-3W & IWD-6-3W.

NOTE: For bar lengths, number of bars and estimated quantities see sheet no. 7116 & 7117.

| REBAR TABLE | |
|---|---|
| SIZE | SPLICE (FT.) |
| #4 | 1'-5" |
| #5 | 1'-9" |
| #6 | 2'-1" |
| #7 | 2'-8" |
| #8 | 3'-5" |
| #9 | 4'-4" |
| #10 | 5'-6" |
| #11 | 6'-9" |

## GENERAL NOTES:

Specifications: Mississippi Standard Specifications for Road and Bridge Construction, 2004.
Barrel details on this sheet shall be used with cover from 2'-6" to the maximum shown on basic drawing IBD-6.
No change of plans will be permitted expect by written approval of the Director Of Structures, State Bridge Engineer. Minor changes in detail of design or construction procedure may be authorized by the Director Of Structures, State Bridge Engineer provided such changes will not be cause for contract price adjustment.
All concrete shall be class "B".
Expansion joint material shall be bituminous fiber type unless unless otherwise noted.
all exposed edges shall be chamfered ¾".
Bar bending details shall be in accordance with "Manual of Standard Practice for Detailing Reinforced Concrete Structures" (ACI 315R-94).
Reinforcement order lists and required placing plans shall be furnished in accordance with section 805 of the Mississippi Standard Specifications. Partial submittals are not acceptable.
Horizontal construction joints may be placed only at the locations shown and concrete shall be allowed to set a minimum of 2 hours before continuing pour.
Reinforcing steel shall be placed in accordance with cross sections and shall be adequately supported from the forms.
All bars shall be accurately spaced and securely wired at each intersection before placing concrete.
All dimensions shall be verified in the field prior to fabrication of the reinforcing steel.
Finish concrete per section 804.03.19.6.2 of the specifications.
Reinforcing steel shall be ASTM A615, grade 60, unless otherwise noted.
Work for which no pay item is provided in the proposal will not be paid for directly and compensation therefor will be included in the prices and payments for bid items.
Concrete in collars shall be allowed to set a minimum of 24 hours before continuing pour.

## SPECIAL PROVISIONS REQUIRED:

Concrete bridges and structures . . . . . No. 907-804

## DESIGN DATA:

Specifications. . . . . A.A.S.H.T.O., 2010 LRFD
Loading. . . . . HL-93
Box bridge concrete. . . . . Class "B" (3,500 p.s.i.)
Equivalent fluid pressure. . . 45 lbs. per cu. ft.

MISSISSIPPI DEPARTMENT OF TRANSPORTATION

BASIC BARREL DETAILS FOR DOUBLE CELL BOX CULVERT

HEIGHT 6 FT.

SPANS 12 - 32 FT.

REVISIONS | BY

DATE | DESIGNER PAUL DEES, P.E. | CHECKER PICKERING FIRM, INC.
DETAILER PAUL DEES, P.E. | ISSUE DATE 1/1/2015
DIRECTOR OF STRUCTURES, STATE BRIDGE ENGINEER - JUSTIN WALKER PE.
DEP. DIR. OF STRUCTURES, ASST. STATE BRIDGE ENGINEER - SCOTT WESTERFIELD PE.

SHT. 1 OF 3
WORKING NUMBER IBD-6
SHEET NUMBER 7115

| AREA OF OPENING SQ. FT. | SIZE OF CULVERT FT. x FT. "S"x"H" | BAR LIST FOR BARREL | | | | | | | | | | | | | | | | | | | | | | | | | | | | | | | | | | EST. QUANTITIES PER LIN. FT. BARREL | |
|---|---|---|---|---|---|---|---|---|---|---|---|---|---|---|---|---|---|---|---|---|---|---|---|---|---|---|---|---|---|---|---|---|---|---|---|---|---|
| | | COVER | T1 | T2 | V1 | V2 | BARS "A" | | BARS "BT" | | BARS "BB" | | BARS "X" | | BARS "H" | | "HD" DOWELS | | BARS "E" | | "ED" DOWELS | | BARS "AST" | | BARS "ASB" | | BARS "HS" | | BARS "BS" | | | BARS "ES" | | BARS "Z1" | | | BARS "Z3" | | | CONC. CU. YD. | REINF. STEEL LBS. |
| | | | | | | | SIZE | SPACING | SIZE | SPACING | SIZE | SPACING | SIZE | SPACING | SIZE | SPACING | SIZE | SPACING | SIZE | SPACING | SIZE | SPACING | SIZE | NO. | SIZE | NO. | SIZE | NO. | SIZE | NO. (WALLS) | NO. (SLABS) | SIZE | NO. | SIZE | SPACING | NO. | SIZE | SPACING | NO. | | |
| 72 | 6x6 | 5'-0" | 9" | 9" | 9" | 9" | #5 | 8½" | #4 | 8½" | #4 | 8½" | #4 | 8½" | #4 | 8½" | #4 | 8½" | #4 | 8½" | #4 | 8½" | #4 | 17 | #4 | 17 | #4 | 12 | #4 | 12 | 30 | #4 | 12 | | | | | | | 1.3750 | 211.629 |
| | | 10'-0" | 9" | 9" | 9" | 9" | #5 | 8" | #4 | 8" | #4 | 8" | #4 | 8" | #4 | 8" | #4 | 8" | #4 | 8" | #4 | 8" | #4 | 17 | #4 | 17 | #4 | 12 | #4 | 12 | 30 | #4 | 12 | | | | | | | 1.3750 | 219.262 |
| | | 15'-0" | 9" | 9" | 9" | 9" | #5 | 7½" | #4 | 7½" | #4 | 7½" | #4 | 7½" | #4 | 7½" | #4 | 7½" | #4 | 7½" | #4 | 7½" | #4 | 17 | #4 | 17 | #4 | 12 | #4 | 12 | 30 | #4 | 12 | | | | | | | 1.3750 | 227.911 |
| | | 20'-0" | 9" | 10½" | 9" | 9" | #5 | 7½" | #4 | 7½" | #4 | 7½" | #4 | 7½" | #4 | 7½" | #4 | 7½" | #4 | 7½" | #4 | 7½" | #4 | 17 | #4 | 17 | #4 | 12 | #4 | 12 | 30 | #4 | 12 | | | | | | | 1.4410 | 228.713 |
| | | 25'-0" | 10½" | 1'-0" | 9" | 9" | #5 | 8" | #4 | 8" | #4 | 8" | #4 | 8" | #4 | 8" | #4 | 8" | #4 | 8" | #4 | 8" | #4 | 17 | #4 | 17 | #4 | 12 | #4 | 12 | 30 | #4 | 12 | | | | | | | 1.5729 | 221.516 |
| | | 30'-0" | 11½" | 1'-1" | 9" | 9" | #5 | 9" | #4 | 9" | #4 | 9" | #4 | 9" | #4 | 9" | #4 | 9" | #4 | 9" | #4 | 9" | #4 | 17 | #4 | 17 | #4 | 12 | #4 | 12 | 30 | #4 | 12 | | | | | | | 1.6609 | 207.740 |
| 96 | 8x6 | 5'-0" | 9" | 9½" | 9" | 9" | #5 | 6" | #4 | 6" | #4 | 6" | #4 | 6" | #4 | 1'-0" | #4 | 1'-0" | #4 | 1'-0" | #4 | 1'-0" | #4 | 21 | #4 | 21 | #4 | 12 | #4 | 12 | 38 | #4 | 12 | | | | | | | 1.6254 | 283.430 |
| | | 10'-0" | 9" | 11" | 9" | 9" | #5 | 7" | #4 | 7" | #4 | 7" | #5 | 7" | #4 | 7" | #4 | 7" | #4 | 7" | #4 | 7" | #4 | 21 | #4 | 21 | #4 | 12 | #4 | 12 | 38 | #4 | 12 | | | | | | | 1.7099 | 299.975 |
| | | 15'-0" | 11" | 1'-1" | 9" | 9" | #5 | 7½" | #4 | 7½" | #4 | 7½" | #5 | 7½" | #4 | 7½" | #4 | 7½" | #4 | 7½" | #4 | 7½" | #4 | 21 | #4 | 21 | #4 | 12 | #4 | 12 | 38 | #4 | 12 | | | | | | | 1.9352 | 298.151 |
| | | 20'-0" | 1'-0" | 1'-2" | 9" | 9" | #5 | 7½" | #4 | 7½" | #4 | 7½" | #5 | 7½" | #4 | 7½" | #4 | 7½" | #4 | 7½" | #4 | 7½" | #4 | 21 | #4 | 21 | #4 | 12 | #4 | 12 | 38 | #4 | 12 | | | | | | | 2.0478 | 290.219 |
| | | 25'-0" | 1'-2" | 1'-4" | 9" | 9" | #5 | 8" | #4 | 8" | #4 | 8" | #5 | 8" | #4 | 8" | #4 | 8" | #4 | 8" | #4 | 8" | #4 | 21 | #4 | 21 | #4 | 12 | #4 | 12 | 38 | #4 | 12 | | | | | | | 2.2731 | 280.681 |
| | | 30'-0" | 1'-4" | 1'-5½" | 9" | 9" | #5 | 8" | #4 | 8" | #4 | 8" | #5 | 8" | #4 | 8" | #4 | 8" | #4 | 8" | #4 | 8" | #4 | 21 | #4 | 21 | #4 | 12 | #4 | 12 | 38 | #4 | 12 | | | | | | | 2.4703 | 282.435 |
| 120 | 10x6 | 5'-0" | 9" | 10" | 9" | 9" | #6 | 6½" | #4 | 6½" | #4 | 6½" | #5 | 6½" | #4 | 6½" | #4 | 6½" | #4 | 6½" | #4 | 6½" | #4 | 25 | #4 | 25 | #4 | 12 | #4 | 12 | 46 | #4 | 12 | | | | | | | 1.8881 | 397.593 |
| | | 10'-0" | 10" | 1'-0½" | 9" | 9" | #5 | 6" | #4 | 6" | #4 | 6" | #5 | 6" | #4 | 1'-0" | #4 | 1'-0" | #4 | 1'-0" | #4 | 1'-0" | #4 | 25 | #4 | 25 | #4 | 12 | #4 | 12 | 46 | #4 | 12 | | | | | | | 2.1285 | 359.744 |
| | | 15'-0" | 1'-1" | 1'-3½" | 9" | 9" | #5 | 6" | #4 | 6" | #4 | 6" | #5 | 6" | #4 | 1'-0" | #4 | 1'-0" | #4 | 1'-0" | #4 | 1'-0" | #4 | 25 | #4 | 25 | #4 | 12 | #4 | 12 | 46 | #4 | 12 | | | | | | | 2.5405 | 362.416 |
| | | 20'-0" | 1'-4" | 1'-6" | 9" | 9" | #5 | 6" | #4 | 6" | #4 | 6" | #5 | 6" | #4 | 1'-0" | #4 | 1'-0" | #4 | 1'-0" | #4 | 1'-0" | #4 | 25 | #4 | 25 | #4 | 12 | #4 | 12 | 46 | #4 | 12 | | | | | | | 2.9182 | 364.866 |
| | | 25'-0" | 1½" | 1'-0½" | 9" | 9" | #7 | 6" | #5 | 6" | #5 | 6" | #7 | 6" | #4 | 1'-0" | #4 | 1'-0" | #4 | 1'-0" | #4 | 1'-0" | #4 | 25 | #4 | 25 | #4 | 12 | #4 | 12 | 46 | #4 | 12 | #4 | 6" | 14 | #4 | 6" | 14 | 2.2315 | 624.749 |
| | | 30'-0" | 1'-0" | 1'-1½" | 9" | 9" | #7 | 6" | #5 | 6" | #5 | 6" | #8 | 6" | #4 | 1'-0" | #4 | 1'-0" | #4 | 1'-0" | #4 | 1'-0" | #4 | 25 | #4 | 25 | #4 | 12 | #4 | 12 | 46 | #4 | 12 | #4 | 6" | 14 | #4 | 6" | 14 | 2.3345 | 680.868 |
| 144 | 12x6 | 5'-0" | 10½" | 11½" | 9" | 9" | #6 | 6" | #5 | 6" | #5 | 6" | #6 | 6" | #4 | 1'-0" | #4 | 1'-0" | #5 | 1'-0" | #5 | 1'-0" | #4 | 29 | #4 | 29 | #4 | 12 | #4 | 12 | 54 | #4 | 12 | | | | | | | 2.3657 | 534.056 |
| | | 10'-0" | 1'-0" | 1'-1½" | 9" | 9" | #6 | 6" | #4 | 6" | #4 | 6" | #6 | 6" | #4 | 1'-0" | #4 | 1'-0" | #4 | 1'-0" | #4 | 1'-0" | #4 | 29 | #4 | 29 | #4 | 12 | #4 | 12 | 54 | #4 | 12 | | | | | | | 2.6493 | 502.747 |
| | | 15'-0" | 1'-2½" | 1'-5½" | 9" | 9" | #6 | 6" | #4 | 6" | #4 | 6" | #6 | 6" | #4 | 1'-0" | #4 | 1'-0" | #4 | 1'-0" | #4 | 1'-0" | #4 | 29 | #4 | 29 | #4 | 12 | #4 | 12 | 54 | #4 | 12 | | | | | | | 3.1759 | 505.642 |
| | | 20'-0" | 1'-0½" | 1'-1" | 9" | 9" | #8 | 6" | #5 | 6" | #5 | 6" | #8 | 6" | #4 | 1'-0" | #4 | 1'-0" | #4 | 1'-0" | #4 | 1'-0" | #4 | 29 | #4 | 29 | #4 | 12 | #4 | 12 | 54 | #4 | 12 | #4 | 6" | 16 | #4 | 6" | 16 | 2.6493 | 846.559 |
| | | 25'-0" | 1'-1" | 1'-2" | 9" | 9" | #8 | 6" | #6 | 6" | #6 | 6" | #8 | 6" | #4 | 1'-0" | #4 | 1'-0" | #4 | 1'-0" | #4 | 1'-0" | #4 | 29 | #4 | 29 | #4 | 12 | #4 | 12 | 54 | #4 | 12 | #4 | 6" | 16 | #4 | 6" | 16 | 2.7708 | 885.965 |
| | | 30'-0" | 1'-2" | 1'-3½" | 9" | 9" | #8 | 6" | #6 | 6" | #6 | 6" | #9 | 6" | #4 | 1'-0" | #4 | 1'-0" | #4 | 1'-0" | #4 | 1'-0" | #4 | 29 | #4 | 29 | #4 | 12 | #4 | 12 | 54 | #4 | 12 | #4 | 6" | 16 | #4 | 6" | 16 | 2.9734 | 966.341 |
| 168 | 14x6 | 5'-0" | 11½" | 1'-0½" | 9" | 9" | #7 | 6" | #5 | 6" | #5 | 6" | #6 | 6" | #4 | 6" | #4 | 6" | #4 | 6" | #4 | 6" | #4 | 33 | #4 | 33 | #4 | 12 | #4 | 12 | 62 | #4 | 12 | | | | | | | 2.8241 | 679.976 |
| | | 10'-0" | 1'-1½" | 1'-3" | 9½" | 9" | #6 | 6" | #5 | 6" | #5 | 6" | #7 | 6" | #4 | 1'-0" | #4 | 1'-0" | #4 | 1'-0" | #4 | 1'-0" | #4 | 33 | #4 | 33 | #4 | 12 | #4 | 12 | 64 | #4 | 12 | | | | | | | 3.2701 | 658.803 |
| | | 15'-0" | 1'-0" | 1'-1" | 10½" | 9" | #8 | 6" | #6 | 6" | #6 | 6" | #8 | 6" | #4 | 1'-0" | #4 | 1'-0" | #4 | 1'-0" | #4 | 1'-0" | #4 | 33 | #4 | 33 | #4 | 12 | #4 | 12 | 64 | #4 | 12 | #4 | 1'-0" | 14 | #4 | 1'-0" | 14 | 2.9923 | 939.113 |
| | | 20'-0" | 1'-3" | 1'-3" | 9" | 9" | #8 | 6" | #5 | 6" | #5 | 6" | #9 | 6" | #4 | 1'-0" | #4 | 1'-0" | #4 | 1'-0" | #4 | 1'-0" | #4 | 33 | #4 | 33 | #4 | 12 | #4 | 12 | 62 | #4 | 12 | #4 | 6" | 20 | #4 | 6" | 20 | 3.3843 | 1069.482 |
| | | 25'-0" | 1'-3" | 1'-4½" | 10" | 9" | #8 | 6" | #6 | 6" | #6 | 6" | #9 | 6" | #4 | 1'-0" | #4 | 1'-0" | #4 | 1'-0" | #4 | 1'-0" | #4 | 33 | #4 | 33 | #4 | 12 | #4 | 12 | 64 | #4 | 12 | #4 | 6" | 20 | #4 | 6" | 20 | 3.5775 | 1113.749 |
| | | 30'-0" | 1'-4" | 1'-6" | 10" | 9" | #8 | 6" | #6 | 6" | #6 | 6" | #9 | 6" | #4 | 1'-0" | #4 | 1'-0" | #4 | 1'-0" | #4 | 1'-0" | #4 | 33 | #4 | 33 | #4 | 12 | #4 | 12 | 64 | #4 | 12 | #4 | 6" | 20 | #4 | 6" | 20 | 3.8122 | 1123.430 |
| 192 | 16x6 | 5'-0" | 1'-1" | 1'-1½" | 10" | 9" | #7 | 6" | #6 | 6" | #6 | 6" | #7 | 6" | #4 | 1'-0" | #4 | 1'-0" | #5 | 1'-0" | #5 | 1'-0" | #4 | 37 | #4 | 37 | #4 | 12 | #4 | 12 | 72 | #4 | 12 | | | | | | | 3.4353 | 846.440 |
| | | 10'-0" | 1'-3½" | 1'-4½" | 10½" | 9" | #7 | 6" | #5 | 6" | #5 | 6" | #7 | 6" | #4 | 1'-0" | #4 | 1'-0" | #4 | 1'-0" | #4 | 1'-0" | #4 | 37 | #4 | 37 | #4 | 12 | #4 | 12 | 72 | #4 | 12 | | | | | | | 4.0463 | 807.662 |
| | | 15'-0" | 1'-2" | 1'-3" | 9" | 9" | #8 | 6" | #6 | 6" | #6 | 6" | #9 | 6" | #4 | 1'-0" | #4 | 1'-0" | #4 | 1'-0" | #4 | 1'-0" | #4 | 37 | #4 | 37 | #4 | 12 | #4 | 12 | 70 | #4 | 12 | #4 | 6" | 16 | #4 | 6" | 16 | 3.6489 | 1191.024 |
| | | 20'-0" | 1'-4½" | 1'-4½" | 9" | 9" | #9 | 6" | #6 | 6" | #6 | 6" | #9 | 6" | #4 | 1'-0" | #4 | 1'-0" | #4 | 1'-0" | #4 | 1'-0" | #4 | 37 | #4 | 37 | #4 | 12 | #4 | 12 | 70 | #4 | 12 | #4 | 6" | 22 | #4 | 6" | 22 | 4.0718 | 1340.047 |
| | | 25'-0" | 1'-5½" | 1'-6½" | 9" | 9" | #9 | 6" | #6 | 6" | #6 | 6" | #10 | 6" | #4 | 1'-0" | #4 | 1'-0" | #4 | 1'-0" | #4 | 1'-0" | #4 | 37 | #4 | 37 | #4 | 12 | #4 | 12 | 70 | #4 | 12 | #5 | 6" | 22 | #5 | 6" | 22 | 4.3889 | 1555.432 |
| | | 30'-0" | 1'-7½" | 1'-8½" | 9" | 9" | #9 | 6" | #6 | 6" | #6 | 6" | #10 | 6" | #4 | 1'-0" | #4 | 1'-0" | #4 | 1'-0" | #4 | 1'-0" | #5 | 37 | #5 | 37 | #5 | 12 | #5 | 12 | 70 | #5 | 12 | #5 | 6" | 22 | #5 | 6" | 22 | 4.8117 | 1675.209 |

| REVISIONS | BY | DATE |
|---|---|---|
| | | |

MISSISSIPPI DEPARTMENT OF TRANSPORTATION

BASIC BARREL DETAILS FOR DOUBLE CELL BOX CULVERT

HEIGHT 6 FT.

SPANS 12 - 32 FT.

SHT. 2 OF 3

WORKING NUMBER IBD-6

SHEET NUMBER 7116

DESIGNER PAUL DEES, P.E. CHECKER PICKERING FIRM, INC.
DETAILER PAUL DEES, P.E. ISSUE DATE 1/1/2015

DIRECTOR OF STRUCTURES, STATE BRIDGE ENGINEER - JUSTIN WALKER PE.
DEP. DIR. OF STRUCTURES, ASST. STATE BRIDGE ENGINEER - SCOTT WESTERFIELD PE.

| AREA OF OPENING SQ. FT. | SIZE OF CULVERT FT. x FT. "S"x"H" | BAR LENGTHS FOR BARREL | | | | | | | | | | | | | | | | | | | | | | | | | | | | |
|---|---|---|---|---|---|---|---|---|---|---|---|---|---|---|---|---|---|---|---|---|---|---|---|---|---|---|---|---|---|---|
| | | COVER | BARS "A" | | BARS "BT" | | | | BARS "BB" | | | | BARS "X" | | BARS "H" | | "HD" DOWELS | | BARS "E" | | "ED" DOWELS | | BARS "Z1" | | | | BARS "Z3" | | | |
| | | | SIZE | LENGTH | SIZE | "X" DIM. | "Y" DIM. | LENGTH | SIZE | "X" DIM. | "Y" DIM. | LENGTH | SIZE | LENGTH | SIZE | LENGTH | SIZE | LENGTH | SIZE | LENGTH | SIZE | LENGTH | SIZE | "X" DIM. | "Y" DIM. | LENGTH | SIZE | "X" DIM. | "Y" DIM. | LENGTH |
| 72 | 6x6 | 5'-0" | #5 | 13'-6" | #4 | 2'-6" | 4'-5½" | 6'-11½" | #4 | 2'-6" | 4'-5½" | 6'-11½" | #4 | 12'-9" | #4 | 5'-4" | #4 | 3'-2" | #4 | 5'-4" | #4 | 3'-2" | | | | | | | | |
| | | 10'-0" | #5 | 13'-6" | #4 | 2'-6" | 4'-5½" | 6'-11½" | #4 | 2'-6" | 4'-5½" | 6'-11½" | #4 | 12'-9" | #4 | 5'-4" | #4 | 3'-2" | #4 | 5'-4" | #4 | 3'-2" | | | | | | | | |
| | | 15'-0" | #5 | 13'-6" | #4 | 2'-6" | 4'-5½" | 6'-11½" | #4 | 2'-6" | 4'-5½" | 6'-11½" | #4 | 12'-9" | #4 | 5'-4" | #4 | 3'-2" | #4 | 5'-4" | #4 | 3'-2" | | | | | | | | |
| | | 20'-0" | #5 | 13'-6" | #4 | 2'-6" | 4'-5½" | 6'-11½" | #4 | 2'-6" | 4'-7" | 7'-1" | #4 | 12'-9" | #4 | 5'-4" | #4 | 3'-3½" | #4 | 5'-4" | #4 | 3'-3½" | | | | | | | | |
| | | 25'-0" | #5 | 13'-6" | #4 | 2'-6" | 4'-7" | 7'-1" | #4 | 2'-6" | 4'-8½" | 7'-2½" | #4 | 12'-9" | #4 | 5'-5½" | #4 | 3'-5" | #4 | 5'-5½" | #4 | 3'-5" | | | | | | | | |
| | | 30'-0" | #5 | 13'-6" | #4 | 2'-6" | 4'-8" | 7'-2" | #4 | 2'-6" | 4'-9½" | 7'-3½" | #4 | 12'-9" | #4 | 5'-6½" | #4 | 3'-6" | #4 | 5'-6½" | #4 | 3'-6" | | | | | | | | |
| 96 | 8x6 | 5'-0" | #5 | 17'-6" | #4 | 2'-6" | 4'-5½" | 6'-11½" | #4 | 2'-6" | 4'-6" | 7'-0" | #4 | 16'-9" | #4 | 5'-4" | #4 | 3'-2½" | #4 | 5'-4" | #4 | 3'-2½" | | | | | | | | |
| | | 10'-0" | #5 | 17'-6" | #4 | 2'-6" | 4'-5½" | 6'-11½" | #4 | 2'-6" | 4'-7½" | 7'-1½" | #5 | 16'-9" | #4 | 5'-4" | #4 | 3'-4" | #4 | 5'-4" | #4 | 3'-4" | | | | | | | | |
| | | 15'-0" | #5 | 17'-6" | #4 | 2'-6" | 4'-7½" | 7'-1½" | #4 | 2'-6" | 4'-9½" | 7'-3½" | #5 | 16'-9" | #4 | 5'-6" | #4 | 3'-6" | #4 | 5'-6" | #4 | 3'-6" | | | | | | | | |
| | | 20'-0" | #5 | 17'-6" | #4 | 2'-6" | 4'-8½" | 7'-2½" | #4 | 2'-6" | 4'-10½" | 7'-4½" | #5 | 16'-9" | #4 | 5'-7" | #4 | 3'-7" | #4 | 5'-7" | #4 | 3'-7" | | | | | | | | |
| | | 25'-0" | #5 | 17'-6" | #4 | 2'-6" | 4'-10½" | 7'-4½" | #4 | 2'-6" | 5'-0½" | 7'-6½" | #5 | 16'-9" | #4 | 5'-9" | #4 | 3'-9" | #4 | 5'-9" | #4 | 3'-9" | | | | | | | | |
| | | 30'-0" | #5 | 17'-6" | #4 | 2'-6" | 5'-0½" | 7'-6½" | #4 | 2'-6" | 5'-2" | 7'-8" | #5 | 16'-9" | #4 | 5'-11" | #4 | 3'-10½" | #4 | 5'-11" | #4 | 3'-10½" | | | | | | | | |
| 120 | 10x6 | 5'-0" | #6 | 21'-6" | #4 | 2'-6" | 4'-5½" | 6'-11½" | #4 | 2'-6" | 4'-6½" | 7'-0½" | #5 | 20'-9" | #4 | 5'-4" | #4 | 3'-3" | #4 | 5'-4" | #4 | 3'-3" | | | | | | | | |
| | | 10'-0" | #5 | 21'-6" | #4 | 2'-6" | 4'-6½" | 7'-0½" | #4 | 2'-6" | 4'-9" | 7'-3" | #5 | 20'-9" | #4 | 5'-5" | #4 | 3'-5½" | #4 | 5'-5" | #4 | 3'-5½" | | | | | | | | |
| | | 15'-0" | #5 | 21'-6" | #4 | 2'-6" | 4'-9½" | 7'-3½" | #4 | 2'-6" | 5'-0" | 7'-6" | #5 | 20'-9" | #4 | 5'-8" | #4 | 3'-8½" | #4 | 5'-8" | #4 | 3'-8½" | | | | | | | | |
| | | 20'-0" | #5 | 21'-6" | #4 | 2'-6" | 5'-0½" | 7'-6½" | #4 | 2'-6" | 5'-2½" | 7'-8½" | #5 | 20'-9" | #4 | 5'-11" | #4 | 3'-11" | #4 | 5'-11" | #4 | 3'-11" | | | | | | | | |
| | | 25'-0" | #7 | 21'-6" | #5 | 2'-10" | 4'-10" | 7'-8" | #5 | 2'-10" | 4'-11" | 7'-9" | #7 | 20'-9" | #4 | 5'-6½" | #4 | 3'-5½" | #4 | 5'-6½" | #4 | 3'-5½" | #4 | 7½" | 7½" | 1'-10⅝" | #4 | 7" | 7" | 1'-9⅞" |
| | | 30'-0" | #7 | 21'-6" | #5 | 2'-10" | 4'-10½" | 7'-8½" | #5 | 2'-10" | 5'-0" | 7'-10" | #8 | 20'-9" | #4 | 5'-7" | #4 | 3'-6½" | #4 | 5'-7" | #4 | 3'-6½" | #4 | 8" | 8" | 1'-11⅝" | #4 | 8" | 8" | 1'-11⅝" |
| 144 | 12x6 | 5'-0" | #6 | 25'-6" | #5 | 2'-10" | 4'-9" | 7'-7" | #5 | 2'-10" | 4'-10" | 7'-8" | #6 | 24'-9" | #4 | 5'-5½" | #4 | 3'-4½" | #5 | 5'-5½" | #5 | 3'-8½" | | | | | | | | |
| | | 10'-0" | #6 | 25'-6" | #4 | 2'-6" | 4'-8½" | 7'-2½" | #4 | 2'-6" | 4'-10" | 7'-4" | #6 | 24'-9" | #4 | 5'-7" | #4 | 3'-6½" | #4 | 5'-7" | #4 | 3'-6½" | | | | | | | | |
| | | 15'-0" | #6 | 25'-6" | #4 | 2'-6" | 4'-11" | 7'-5" | #4 | 2'-6" | 5'-2" | 7'-8" | #6 | 24'-9" | #4 | 5'-9½" | #4 | 3'-10½" | #4 | 5'-9½" | #4 | 3'-10½" | | | | | | | | |
| | | 20'-0" | #8 | 25'-6" | #5 | 2'-10" | 4'-11" | 7'-9" | #5 | 2'-10" | 4'-11½" | 7'-9½" | #8 | 24'-9" | #4 | 5'-7½" | #4 | 3'-6" | #4 | 5'-7½" | #4 | 3'-6" | #4 | 8½" | 8½" | 2'-0" | #4 | 7½" | 7½" | 1'-10⅝" |
| | | 25'-0" | #8 | 25'-6" | #6 | 3'-2" | 5'-1½" | 8'-3½" | #6 | 3'-2" | 5'-2½" | 8'-4½" | #8 | 24'-9" | #4 | 5'-8" | #4 | 3'-7" | #4 | 5'-8" | #4 | 3'-7" | #4 | 9" | 9" | 2'-0⅜" | #4 | 8½" | 8½" | 2'-0" |
| | | 30'-0" | #8 | 25'-6" | #6 | 3'-2" | 5'-2½" | 8'-4½" | #6 | 3'-2" | 5'-4" | 8'-6" | #9 | 24'-9" | #4 | 5'-9" | #4 | 3'-8½" | #4 | 5'-9" | #4 | 3'-8½" | #4 | 10" | 10" | 2'-2⅛" | #4 | 10" | 10" | 2'-2⅛" |
| 168 | 14x6 | 5'-0" | #7 | 29'-6" | #5 | 2'-10" | 4'-10" | 7'-8" | #5 | 2'-10" | 4'-11" | 7'-9" | #6 | 28'-9" | #4 | 5'-6½" | #4 | 3'-5½" | #4 | 5'-6½" | #4 | 3'-5½" | | | | | | | | |
| | | 10'-0" | #6 | 29'-6½" | #5 | 2'-10½" | 5'-0" | 7'-10½" | #5 | 2'-10½" | 5'-1½" | 8'-0" | #7 | 28'-9" | #4 | 5'-8½" | #4 | 3'-8" | #4 | 5'-8½" | #4 | 3'-8" | | | | | | | | |
| | | 15'-0" | #8 | 29'-7½" | #6 | 3'-3½" | 5'-0½" | 8'-4" | #6 | 3'-3½" | 5'-1½" | 8'-5" | #8 | 28'-9" | #4 | 5'-7" | #4 | 3'-6" | #4 | 5'-7" | #4 | 3'-6" | #4 | 8" | 8" | 1'-11⅝" | #4 | 7½" | 7½" | 1'-10⅝" |
| | | 20'-0" | #8 | 29'-6" | #5 | 2'-10" | 5'-1½" | 7'-11½" | #5 | 2'-10" | 5'-1½" | 7'-11½" | #9 | 28'-9" | #4 | 5'-10" | #4 | 3'-8" | #4 | 5'-10" | #4 | 3'-8" | #4 | 11" | 11" | 2'-3⅜" | #4 | 9½" | 9½" | 2'-1⅞" |
| | | 25'-0" | #8 | 29'-7" | #6 | 3'-3" | 5'-3½" | 8'-6½" | #6 | 3'-3" | 5'-5" | 8'-8" | #9 | 28'-9" | #4 | 5'-10" | #4 | 3'-9½" | #4 | 5'-10" | #4 | 3'-9½" | #4 | 11" | 11" | 2'-3⅜" | #4 | 11" | 11" | 2'-3⅜" |
| | | 30'-0" | #8 | 29'-7" | #6 | 3'-3" | 5'-4½" | 8'-7½" | #6 | 3'-3" | 5'-6½" | 8'-9½" | #9 | 28'-9" | #4 | 5'-11" | #4 | 3'-11" | #4 | 5'-11" | #4 | 3'-11" | #4 | 1'-0" | 1'-0" | 2'-5" | #4 | 1'-0½" | 1'-0½" | 2'-5⅛" |
| 192 | 16x6 | 5'-0" | #7 | 33'-7" | #6 | 3'-3" | 5'-1½" | 8'-4½" | #6 | 3'-3" | 5'-2" | 8'-5" | #7 | 32'-9" | #4 | 5'-8" | #4 | 3'-6½" | #5 | 5'-8" | #5 | 3'-10½" | | | | | | | | |
| | | 10'-0" | #7 | 33'-7½" | #5 | 2'-11½" | 5'-2" | 8'-1½" | #5 | 2'-11½" | 5'-3" | 8'-2½" | #7 | 32'-9" | #4 | 5'-10½" | #4 | 3'-9½" | #4 | 5'-10½" | #4 | 3'-9½" | | | | | | | | |
| | | 15'-0" | #8 | 33'-6" | #6 | 3'-2" | 5'-2½" | 8'-4½" | #6 | 3'-2" | 5'-3½" | 8'-5½" | #9 | 32'-9" | #4 | 5'-9" | #4 | 3'-8" | #4 | 5'-9" | #4 | 3'-8" | #4 | 10" | 10" | 2'-2⅛" | #4 | 9½" | 9½" | 2'-1⅞" |
| | | 20'-0" | #9 | 33'-6" | #6 | 3'-2" | 5'-5" | 8'-7" | #6 | 3'-2" | 5'-5" | 8'-7" | #9 | 32'-9" | #4 | 5'-11½" | #4 | 3'-9½" | #4 | 5'-11½" | #4 | 3'-9½" | #4 | 1'-0½" | 1'-0½" | 2'-5⅛" | #4 | 11" | 11" | 2'-3⅜" |
| | | 25'-0" | #9 | 33'-6" | #6 | 3'-2" | 5'-6" | 8'-8" | #6 | 3'-2" | 5'-7" | 8'-9" | #10 | 32'-9" | #4 | 6'-0½" | #4 | 3'-11½" | #4 | 6'-0½" | #4 | 3'-11½" | #5 | 1'-1½" | 1'-1½" | 2'-7⅛" | #5 | 1'-1" | 1'-1" | 2'-6⅜" |
| | | 30'-0" | #9 | 33'-6" | #6 | 3'-2" | 5'-8" | 8'-10" | #6 | 3'-2" | 5'-9" | 8'-11" | #10 | 32'-9" | #4 | 6'-2½" | #4 | 4'-1½" | #4 | 6'-2½" | #4 | 4'-1½" | #5 | 1'-3½" | 1'-3½" | 2'-9⅝" | #5 | 1'-3" | 1'-3" | 2'-9⅜" |

MISSISSIPPI DEPARTMENT OF TRANSPORTATION

BASIC BARREL DETAILS FOR
DOUBLE CELL BOX CULVERT

HEIGHT 6 FT.

SPANS 12 - 32 FT.

SHT. 3 OF 3

WORKING NUMBER
IBD-6

SHEET NUMBER
7117

REVISIONS | BY | DATE

DESIGNER PAUL DEES, P.E. CHECKER PICKERING FIRM, INC.
DETAILER PAUL DEES, P.E. ISSUE DATE 1/1/2015
DIRECTOR OF STRUCTURES, STATE BRIDGE ENGINEER - JUSTIN WALKER PE.
DEP. DIR. OF STRUCTURES, ASST. STATE BRIDGE ENGINEER - SCOTT WESTERFIELD PE.

DEPARTMENT OF TRANSPORTATION MDOT MISSISSIPPI

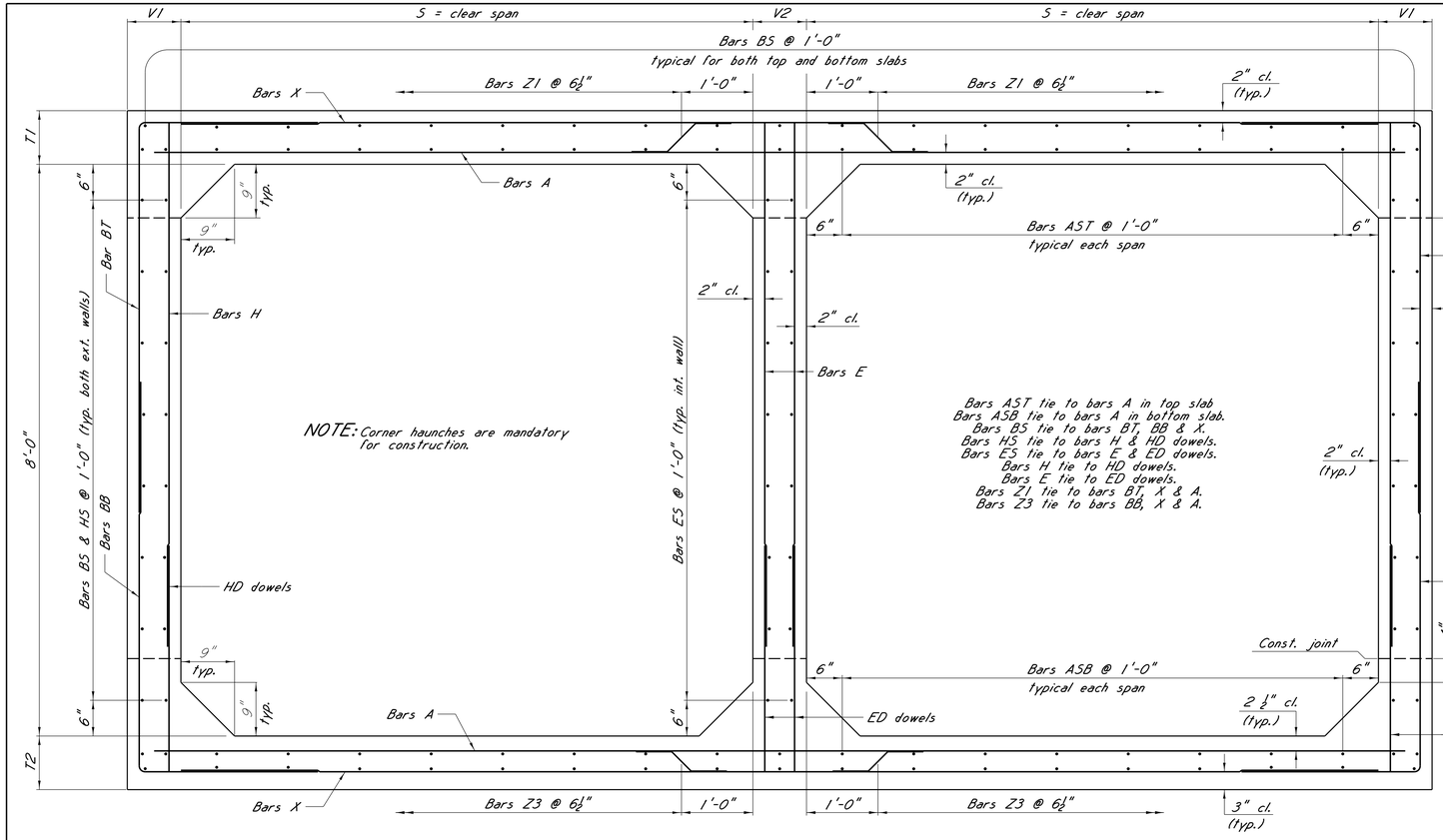


CROSS SECTION

NOTE: Where cover is 8 ft. or less and a joint occurs within the limits of 5 ft. beyond each edge of pavement, use complete collar at joints per basic drawing ICJ-1 or ICJS-1.

note: Joints shall not be located closer than 5 ft. outside of pavement for cover of 8 ft. or less except in the cases where median is less than 10 ft. where cover exceeds 8 ft. joints may be located without regards to pavement edge.

NOTE: See drawing IBJL-1 for additional collar locations.

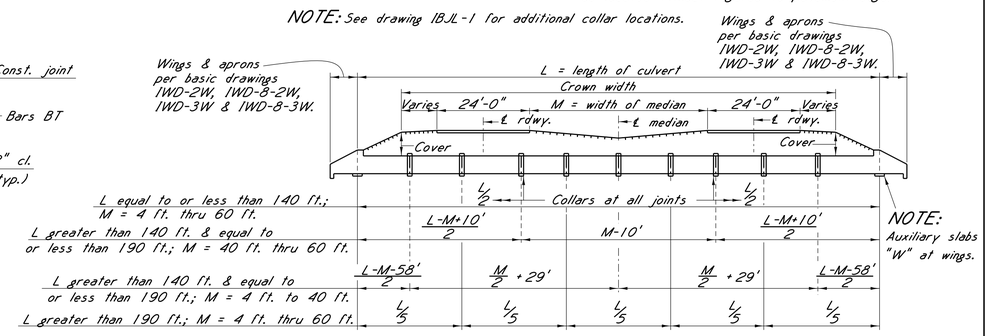


NOTE: Auxiliary slabs "W" at wings.

SIDE ELEVATION OF CULVERT

Showing collar locations
Drawn for L = 150 ft. and M = 60 ft.

NOTE: For bar lengths, number of bars and estimated quantities see sheet no. 7119 & 7120.

NOTE: For reinforcing required in parapet & wingwalls to be placed prior to barrel construction, see basic drawings IWD-2W, IWD-8-2W, IWD-3W & IWD-8-3W.

NOTE: Box culverts with less than 2'-6" cover will have to be designed individually.

## GENERAL NOTES:

Specifications: Mississippi standard specifications for road and bridge construction, 2004.
Barrel details on this sheet shall be used with cover from 2'-6" to the maximum shown on basic drawing IBD-8.
no change of plans will be permitted expect by written approval of the director of structures, state bridge engineer. minor changes in detail of design or construction procedure may be authorized by the director of structures, state bridge engineer provided such changes will not be cause for contract price adjustment.
All concrete shall be class "B".
Expansion joint material shall be bituminous fiber type unless unless otherwise noted.
All exposed edges shall be chamfered ¾".
Bar bending details shall be in accordance with "Manual of Standard Practice for Detailing Reinforced Concrete Structures" (ACI 315R-94).
Reinforcement order lists and required placing plans shall be furnished in accordance with section 805 of the Mississippi Standard Specifications. Partial submittals are not acceptable.
Horizontal construction joints may be placed only at the locations shown and concrete shall be allowed to set a minimum of 2 hours before continuing pour.
Reinforcing steel shall be placed in accordance with cross sections and shall be adequately supported from the forms.
All bars shall be accurately spaced and securely wired at each intersection before placing concrete.
All dimensions shall be verified in the field prior to fabrication of the reinforcing steel.
Finish concrete per section 804.03.19.6.2 of the specifications.
Reinforcing steel shall be ASTM A615, grade 60, unless otherwise noted.
Work for which no pay item is provided in the proposal will not be paid for directly and compensation therefor will be included in the prices and payments for bid items.
Concrete in collars shall be allowed to set a minimum of 24 hours before continuing pour.

## SPECIAL PROVISIONS REQUIRED:

Concrete bridges and structures . . . . . No. 907-804

## DESIGN DATA:

Specifications. . . . . A.A.S.H.T.O., 2010 LRFD
Loading. . . . . HL-93.
Box bridge concrete. . . . . Class "B" (3,500 p.s.i.)
Equivalent fluid pressure. . . 45 lbs. per cu. ft.

| REBAR TABLE | |
|---|---|
| SIZE | SPLICE (FT.) |
| #4 | 1'-5" |
| #5 | 1'-9" |
| #6 | 2'-1" |
| #7 | 2'-8" |
| #8 | 3'-5" |
| #9 | 4'-4" |
| #10 | 5'-6" |
| #11 | 6'-9" |

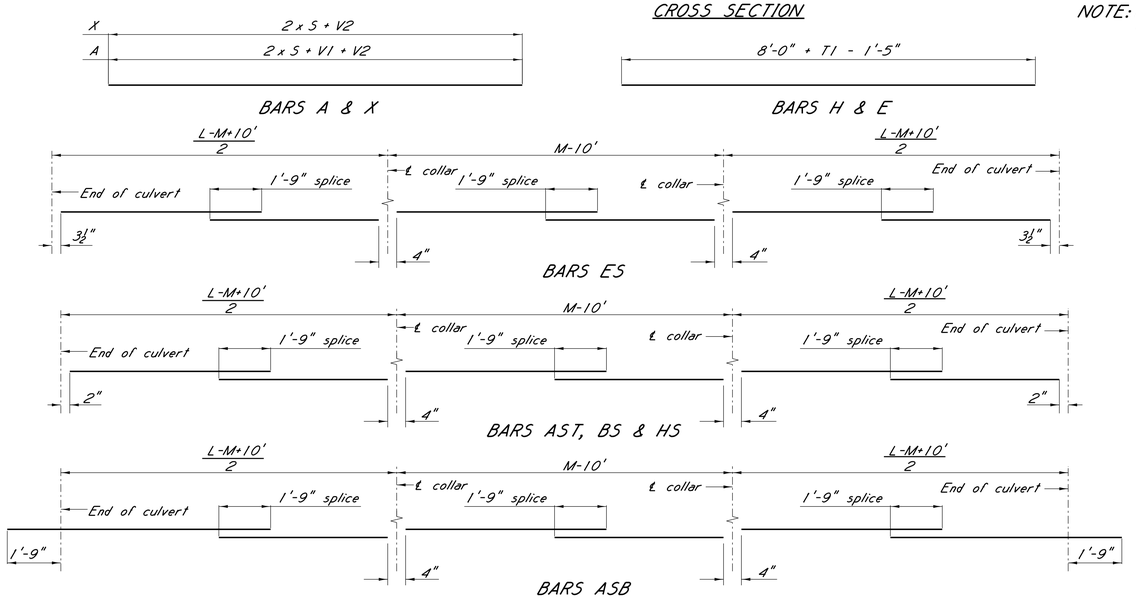


BAR BENDING DETAILS

Dimensions are out to out

NOTE: The diagrams for Bars ASB, AST, BS, HS & ES are for a culvert length greater than 140 ft. and equal to or less than 190 ft. with a median of 40 ft. thru 60 ft. for conditions other than these, use sections as shown on elevation of culvert.

| REVISIONS | BY |
|---|---|
| | |

MISSISSIPPI DEPARTMENT OF TRANSPORTATION

BASIC BARREL DETAILS FOR DOUBLE CELL BOX CULVERT

HEIGHT 8 FT.

SPANS 16 - 32 FT.

SHT. 1 OF 3

WORKING NUMBER IBD-8

SHEET NUMBER 7118

DATE
DESIGNER PAUL DEES, P.E. CHECKER PICKERING FIRM, INC.
DETAILER PAUL DEES, P.E. ISSUE DATE 1/1/2015
DIRECTOR OF STRUCTURES, STATE BRIDGE ENGINEER - JUSTIN WALKER PE.
DEP. DIR. OF STRUCTURES, ASST. STATE BRIDGE ENGINEER - SCOTT WESTERFIELD PE.

| AREA OF OPENING SQ. FT. | SIZE OF CULVERT FT. x FT. "S"x"H" | BAR LIST FOR BARREL | | | | | | | | | | | | | | | | | | | | | | | | | | | | | | | | | | | | EST. QUANTITIES PER LIN. FT. BARREL | |
|---|---|---|---|---|---|---|---|---|---|---|---|---|---|---|---|---|---|---|---|---|---|---|---|---|---|---|---|---|---|---|---|---|---|---|---|---|---|---|---|
| | | COVER | T1 | T2 | V1 | V2 | BARS "A" | | BARS "BT" | | BARS "BB" | | BARS "X" | | BARS "H" | | "HD" DOWELS | | BARS "E" | | "ED" DOWELS | | BARS "AST" | | BARS "ASB" | | BARS "HS" | | BARS "BS" | | | BARS "ES" | | BARS "Z1" | | | BARS "Z3" | | | CONC. CU. YD. | REINF. STEEL LBS. |
| | | | | | | | SIZE | SPACING | SIZE | SPACING | SIZE | SPACING | SIZE | SPACING | SIZE | SPACING | SIZE | SPACING | SIZE | SPACING | SIZE | SPACING | SIZE | NO. | SIZE | NO. | SIZE | NO. | SIZE | NO. (WALLS) | NO. (SLABS) | SIZE | NO. | SIZE | SPACING | NO. | SIZE | SPACING | NO. | | |
| 128 | 8x8 | 5'-0" | 9" | 9" | 9" | 9" | #6 | 7" | #4 | 7" | #4 | 7" | #4 | 7" | #4 | 7" | #4 | 7" | #4 | 7" | #4 | 7" | #4 | 21 | #4 | 21 | #4 | 16 | #4 | 16 | 38 | #4 | 16 | | | | | | 1.7639 | 298.536 |
| | | 10'-0" | 9" | 10½" | 9" | 9" | #5 | 7" | #4 | 7" | #4 | 7" | #5 | 7" | #4 | 7" | #4 | 7" | #4 | 7" | #4 | 7" | #4 | 21 | #4 | 21 | #4 | 16 | #4 | 16 | 38 | #4 | 16 | | | | | | 1.8484 | 293.391 |
| | | 15'-0" | 11" | 1'-0½" | 9" | 9" | #5 | 7½" | #4 | 7½" | #4 | 7½" | #5 | 7½" | #4 | 7½" | #4 | 7½" | #4 | 7½" | #4 | 7½" | #4 | 21 | #4 | 21 | #4 | 16 | #4 | 16 | 38 | #4 | 16 | | | | | | 2.0737 | 281.669 |
| | | 20'-0" | 1'-0" | 1'-1½" | 9" | 9" | #5 | 8" | #4 | 8" | #4 | 8" | #5 | 8" | #4 | 8" | #4 | 8" | #4 | 8" | #4 | 8" | #4 | 21 | #4 | 21 | #4 | 16 | #4 | 16 | 38 | #4 | 16 | | | | | | 2.1863 | 270.411 |
| | | 25'-0" | 1'-2" | 1'-3½" | 9½" | 9" | #5 | 8" | #4 | 8" | #4 | 8" | #5 | 8" | #4 | 8" | #4 | 8" | #4 | 8" | #4 | 8" | #4 | 21 | #4 | 21 | #4 | 16 | #4 | 16 | 40 | #4 | 16 | | | | | | 2.4439 | 274.048 |
| | | 30'-0" | 1'-3½" | 1'-5" | 10½" | 9" | #5 | 8" | #4 | 8" | #4 | 8" | #5 | 8" | #4 | 8" | #4 | 8" | #4 | 8" | #4 | 8" | #4 | 21 | #4 | 21 | #4 | 16 | #4 | 16 | 40 | #4 | 16 | | | | | | 2.6798 | 276.146 |
| 160 | 10x8 | 5'-0" | 9" | 10½" | 9" | 9" | #6 | 6½" | #4 | 6½" | #4 | 6½" | #5 | 6½" | #4 | 1'-1" | #4 | 1'-1" | #4 | 1'-1" | #4 | 1'-1" | #4 | 25 | #4 | 25 | #4 | 16 | #4 | 16 | 46 | #4 | 16 | | | | | | 2.0891 | 361.110 |
| | | 10'-0" | 10½" | 1'-0½" | 9" | 9" | #5 | 6" | #4 | 6" | #4 | 6" | #5 | 6" | #4 | 1'-0" | #4 | 1'-0" | #4 | 1'-0" | #4 | 1'-0" | #4 | 25 | #4 | 25 | #4 | 16 | #4 | 16 | 46 | #4 | 16 | | | | | | 2.3295 | 345.271 |
| | | 15'-0" | 1'-1" | 1'-3" | 9" | 9" | #5 | 6" | #4 | 6" | #4 | 6" | #5 | 6" | #4 | 1'-0" | #4 | 1'-0" | #4 | 1'-0" | #4 | 1'-0" | #4 | 25 | #4 | 25 | #4 | 16 | #4 | 16 | 46 | #4 | 16 | | | | | | 2.6728 | 347.498 |
| | | 20'-0" | 1'-4" | 1'-5½" | 9" | 9" | #5 | 6½" | #4 | 6½" | #4 | 6½" | #5 | 6½" | #4 | 1'-1" | #4 | 1'-1" | #4 | 1'-1" | #4 | 1'-1" | #4 | 25 | #4 | 25 | #4 | 16 | #4 | 16 | 46 | #4 | 16 | | | | | | 3.0505 | 330.427 |
| | | 25'-0" | 1'-0" | 1'-0½" | 9½" | 9" | #7 | 6" | #5 | 6" | #5 | 6" | #7 | 6" | #4 | 1'-0" | #4 | 1'-0" | #4 | 1'-0" | #4 | 1'-0" | #4 | 25 | #4 | 25 | #4 | 16 | #4 | 16 | 48 | #4 | 16 | #5 | 1'-0" | 14 | #5 | 1'-0" | 14 | 2.4635 | 601.009 |
| | | 30'-0" | 1'-1½" | 1'-2" | 11" | 9" | #7 | 6" | #5 | 6" | #5 | 6" | #7 | 6" | #4 | 1'-0" | #4 | 1'-0" | #4 | 1'-0" | #4 | 1'-0" | #4 | 25 | #4 | 25 | #4 | 16 | #4 | 16 | 48 | #4 | 16 | #5 | 1'-0" | 14 | #5 | 1'-0" | 14 | 2.7656 | 609.947 |
| 192 | 12x8 | 5'-0" | 10½" | 11½" | 9" | 9" | #6 | 6" | #5 | 6" | #5 | 6" | #6 | 6" | #5 | 1'-0" | #5 | 1'-0" | #5 | 1'-0" | #5 | 1'-0" | #4 | 29 | #4 | 29 | #4 | 16 | #4 | 16 | 54 | #4 | 16 | | | | | | 2.5324 | 527.336 |
| | | 10'-0" | 1'-0" | 1'-1" | 9" | 9" | #6 | 6" | #4 | 6" | #4 | 6" | #6 | 6" | #4 | 1'-0" | #4 | 1'-0" | #4 | 1'-0" | #4 | 1'-0" | #4 | 29 | #4 | 29 | #4 | 16 | #4 | 16 | 54 | #4 | 16 | | | | | | 2.7755 | 482.485 |
| | | 15'-0" | 1'-3" | 1'-5½" | 9" | 9" | #6 | 6" | #4 | 6" | #4 | 6" | #6 | 6" | #4 | 1'-0" | #4 | 1'-0" | #4 | 1'-0" | #4 | 1'-0" | #4 | 29 | #4 | 29 | #4 | 16 | #4 | 16 | 54 | #4 | 16 | | | | | | 3.3831 | 485.825 |
| | | 20'-0" | 1'-1" | 1'-1" | 9½" | 9½" | #8 | 6½" | #5 | 6½" | #5 | 6½" | #8 | 6½" | #5 | 1'-1" | #5 | 1'-1" | #5 | 1'-1" | #5 | 1'-1" | #4 | 29 | #4 | 29 | #4 | 16 | #4 | 16 | 56 | #4 | 16 | #5 | 1'-1" | 16 | #5 | 1'-1" | 16 | 2.9035 | 777.922 |
| | | 25'-0" | 1'-2" | 1'-2½" | 9½" | 9" | #7 | 6" | #5 | 6" | #5 | 6" | #8 | 6" | #4 | 1'-0" | #4 | 1'-0" | #4 | 1'-0" | #4 | 1'-0" | #4 | 29 | #4 | 29 | #4 | 16 | #4 | 16 | 56 | #4 | 16 | #5 | 1'-0" | 16 | #5 | 1'-0" | 16 | 3.0910 | 757.086 |
| | | 30'-0" | 1'-3" | 1'-4" | 11½" | 9" | #7 | 6" | #5 | 6" | #5 | 6" | #8 | 6" | #4 | 1'-0" | #4 | 1'-0" | #4 | 1'-0" | #4 | 1'-0" | #4 | 29 | #4 | 29 | #4 | 16 | #4 | 16 | 56 | #4 | 16 | #4 | 6" | 16 | #4 | 6" | 16 | 3.4249 | 786.632 |
| 224 | 14x8 | 5'-0" | 1'-0" | 1'-0½" | 9" | 9" | #7 | 6" | #5 | 6" | #5 | 6" | #6 | 6" | #5 | 1'-0" | #5 | 1'-0" | #5 | 1'-0" | #5 | 1'-0" | #4 | 33 | #4 | 33 | #4 | 16 | #4 | 16 | 62 | #4 | 16 | | | | | | 3.0374 | 651.783 |
| | | 10'-0" | 1'-1½" | 1'-3" | 9" | 9" | #6 | 6" | #5 | 6" | #5 | 6" | #7 | 6" | #4 | 1'-0" | #4 | 1'-0" | #4 | 1'-0" | #4 | 1'-0" | #4 | 33 | #4 | 33 | #4 | 16 | #4 | 16 | 62 | #4 | 16 | | | | | | 3.4109 | 634.485 |
| | | 15'-0" | 1'-1" | 1'-1" | 9" | 9" | #8 | 6" | #6 | 6" | #6 | 6" | #8 | 6" | #4 | 1'-0" | #4 | 1'-0" | #4 | 1'-0" | #4 | 1'-0" | #4 | 33 | #4 | 33 | #4 | 16 | #4 | 16 | 62 | #4 | 16 | #5 | 1'-0" | 14 | #5 | 1'-0" | 14 | 3.1775 | 938.762 |
| | | 20'-0" | 1'-3" | 1'-3" | 11" | 9" | #8 | 6" | #5 | 6" | #5 | 6" | #8 | 6" | #4 | 1'-0" | #4 | 1'-0" | #4 | 1'-0" | #4 | 1'-0" | #4 | 33 | #4 | 33 | #4 | 16 | #4 | 16 | 64 | #4 | 16 | #5 | 1'-0" | 20 | #5 | 1'-0" | 20 | 3.6806 | 941.778 |
| | | 25'-0" | 1'-4" | 1'-5" | 11½" | 9" | #8 | 6" | #6 | 6" | #6 | 6" | #9 | 6" | #4 | 1'-0" | #4 | 1'-0" | #4 | 1'-0" | #4 | 1'-0" | #4 | 33 | #4 | 33 | #4 | 16 | #4 | 16 | 64 | #4 | 16 | #4 | 6" | 20 | #4 | 6" | 20 | 3.9969 | 1103.683 |
| | | 30'-0" | 1'-5" | 1'-6½" | 1'-0" | 9" | #8 | 6½" | #6 | 6½" | #6 | 6½" | #9 | 6½" | #5 | 1'-1" | #5 | 1'-1" | #5 | 1'-1" | #5 | 1'-1" | #4 | 33 | #4 | 33 | #4 | 16 | #4 | 16 | 64 | #4 | 16 | #4 | 6½" | 20 | #4 | 6½" | 20 | 4.2674 | 1055.581 |
| 256 | 16x8 | 5'-0" | 1'-1" | 1'-1½" | 9½" | 9" | #7 | 6" | #5 | 6" | #5 | 6" | #7 | 6" | #5 | 1'-0" | #5 | 1'-0" | #5 | 1'-0" | #5 | 1'-0" | #4 | 37 | #4 | 37 | #4 | 16 | #4 | 16 | 72 | #4 | 16 | | | | | | 3.5828 | 793.624 |
| | | 10'-0" | 1'-3½" | 1'-5" | 10" | 9" | #7 | 6½" | #5 | 6½" | #5 | 6½" | #7 | 6½" | #5 | 1'-1" | #5 | 1'-1" | #5 | 1'-1" | #5 | 1'-1" | #4 | 37 | #4 | 37 | #4 | 16 | #4 | 16 | 72 | #4 | 16 | | | | | | 4.2517 | 747.031 |
| | | 15'-0" | 1'-2½" | 1'-2½" | 11" | 9" | #8 | 6" | #6 | 6" | #6 | 6" | #9 | 6" | #4 | 1'-0" | #4 | 1'-0" | #4 | 1'-0" | #4 | 1'-0" | #4 | 37 | #4 | 37 | #4 | 16 | #4 | 16 | 72 | #4 | 16 | #5 | 1'-0" | 16 | #5 | 1'-0" | 16 | 3.9442 | 1151.937 |
| | | 20'-0" | 1'-5" | 1'-5" | 1'-0" | 9" | #8 | 6" | #6 | 6" | #6 | 6" | #9 | 6" | #4 | 1'-0" | #4 | 1'-0" | #4 | 1'-0" | #4 | 1'-0" | #4 | 37 | #4 | 37 | #4 | 16 | #4 | 16 | 72 | #4 | 16 | #5 | 1'-0" | 16 | #5 | 1'-0" | 16 | 4.5448 | 1167.279 |
| | | 25'-0" | 1'-7" | 1'-7" | 1'-1" | 9" | #8 | 6" | #6 | 6" | #6 | 6" | #9 | 6" | #4 | 1'-0" | #4 | 1'-0" | #4 | 1'-0" | #4 | 1'-0" | #4 | 37 | #4 | 37 | #4 | 16 | #4 | 16 | 72 | #4 | 16 | #4 | 6" | 22 | #4 | 6" | 22 | 5.0427 | 1248.008 |
| | | 30'-0" | 1'-8" | 1'-9" | 1'-2" | 10" | #9 | 6" | #6 | 6" | #6 | 6" | #9 | 6" | #4 | 1'-0" | #4 | 1'-0" | #4 | 1'-0" | #4 | 1'-0" | #5 | 37 | #5 | 37 | #5 | 16 | #5 | 16 | 72 | #5 | 16 | #5 | 6" | 22 | #5 | 6" | 22 | 5.4717 | 1530.767 |

MISSISSIPPI DEPARTMENT OF TRANSPORTATION

BASIC BARREL DETAILS FOR DOUBLE CELL BOX CULVERT

HEIGHT 8 FT.

SPANS 16 - 32 FT.

SHT. 2 OF 3

WORKING NUMBER IBD-8

SHEET NUMBER 7119

REVISIONS | BY | DATE

DESIGNER PAUL DEES, P.E. CHECKER PICKERING FIRM, INC.
DETAILER PAUL DEES, P.E. ISSUE DATE 1/1/2015
DIRECTOR OF STRUCTURES, STATE BRIDGE ENGINEER - JUSTIN WALKER PE.
DEP. DIR. OF STRUCTURES, ASST. STATE BRIDGE ENGINEER - SCOTT WESTERFIELD PE.

| AREA OF OPENING SQ. FT. | SIZE OF CULVERT FT. x FT. "S"x"H" | BAR LENGTHS FOR BARREL | | | | | | | | | | | | | | | | | | | | | | | | | | | | |
|---|---|---|---|---|---|---|---|---|---|---|---|---|---|---|---|---|---|---|---|---|---|---|---|---|---|---|---|---|---|---|
| | | COVER | BARS "A" | | BARS "BT" | | | | BARS "BB" | | | | BARS "X" | | BARS "H" | | "HD" DOWELS | | BARS "E" | | "ED" DOWELS | | BARS "Z1" | | | | BARS "Z3" | | | |
| | | | SIZE | LENGTH | SIZE | "X" DIM. | "Y" DIM. | LENGTH | SIZE | "X" DIM. | "Y" DIM. | LENGTH | SIZE | LENGTH | SIZE | LENGTH | SIZE | LENGTH | SIZE | LENGTH | SIZE | LENGTH | SIZE | "X" DIM. | "Y" DIM. | LENGTH | SIZE | "X" DIM. | "Y" DIM. | LENGTH |
| 128 | 8x8 | 5'-0" | #6 | 17'-6" | #4 | 2'-6" | 5'-5½" | 7'-11½" | #4 | 2'-6" | 5'-5½" | 7'-11½" | #4 | 16'-9" | #4 | 7'-4" | #4 | 3'-2" | #4 | 7'-4" | #4 | 3'-2" | | | | | | | | |
| | | 10'-0" | #5 | 17'-6" | #4 | 2'-6" | 5'-5½" | 7'-11½" | #4 | 2'-6" | 5'-7" | 8'-1" | #5 | 16'-9" | #4 | 7'-4" | #4 | 3'-3½" | #4 | 7'-4" | #4 | 3'-3½" | | | | | | | | |
| | | 15'-0" | #5 | 17'-6" | #4 | 2'-6" | 5'-7½" | 8'-1½" | #4 | 2'-6" | 5'-9" | 8'-3" | #5 | 16'-9" | #4 | 7'-6" | #4 | 3'-5½" | #4 | 7'-6" | #4 | 3'-5½" | | | | | | | | |
| | | 20'-0" | #5 | 17'-6" | #4 | 2'-6" | 5'-8½" | 8'-2½" | #4 | 2'-6" | 5'-10" | 8'-4" | #5 | 16'-9" | #4 | 7'-7" | #4 | 3'-6½" | #4 | 7'-7" | #4 | 3'-6½" | | | | | | | | |
| | | 25'-0" | #5 | 17'-6½" | #4 | 2'-6½" | 5'-10½" | 8'-5" | #4 | 2'-6½" | 6'-0" | 8'-6½" | #5 | 16'-9" | #4 | 7'-9" | #4 | 3'-8½" | #4 | 7'-9" | #4 | 3'-8½" | | | | | | | | |
| | | 30'-0" | #5 | 17'-7½" | #4 | 2'-7½" | 6'-0" | 8'-7½" | #4 | 2'-7½" | 6'-1½" | 8'-9" | #5 | 16'-9" | #4 | 7'-10½" | #4 | 3'-10" | #4 | 7'-10½" | #4 | 3'-10" | | | | | | | | |
| 160 | 10x8 | 5'-0" | #6 | 21'-6" | #4 | 2'-6" | 5'-5½" | 7'-11½" | #4 | 2'-6" | 5'-7" | 8'-1" | #5 | 20'-9" | #4 | 7'-4" | #4 | 3'-3½" | #4 | 7'-4" | #4 | 3'-3½" | | | | | | | | |
| | | 10'-0" | #5 | 21'-6" | #4 | 2'-6" | 5'-7" | 8'-1" | #4 | 2'-6" | 5'-9" | 8'-3" | #5 | 20'-9" | #4 | 7'-5½" | #4 | 3'-5½" | #4 | 7'-5½" | #4 | 3'-5½" | | | | | | | | |
| | | 15'-0" | #5 | 21'-6" | #4 | 2'-6" | 5'-9½" | 8'-3½" | #4 | 2'-6" | 5'-11½" | 8'-5½" | #5 | 20'-9" | #4 | 7'-8" | #4 | 3'-8" | #4 | 7'-8" | #4 | 3'-8" | | | | | | | | |
| | | 20'-0" | #5 | 21'-6" | #4 | 2'-6" | 6'-0½" | 8'-6½" | #4 | 2'-6" | 6'-2" | 8'-8" | #5 | 20'-9" | #4 | 7'-11" | #4 | 3'-10½" | #4 | 7'-11" | #4 | 3'-10½" | | | | | | | | |
| | | 25'-0" | #7 | 21'-6½" | #5 | 2'-10½" | 5'-10½" | 8'-9" | #5 | 2'-10½" | 5'-11" | 8'-9½" | #7 | 20'-9" | #4 | 7'-7" | #4 | 3'-5½" | #4 | 7'-7" | #4 | 3'-5½" | #5 | 8" | 8" | 1'-11 5/16" | #5 | 7" | 7" | 1'-9⅞" |
| | | 30'-0" | #7 | 21'-8" | #5 | 3'-0" | 6'-0" | 9'-0" | #5 | 3'-0" | 6'-0½" | 9'-0½" | #7 | 20'-9" | #4 | 7'-8½" | #4 | 3'-7" | #4 | 7'-8½" | #4 | 3'-7" | #5 | 9½" | 9½" | 2'-1 7/16" | #5 | 8½" | 8½" | 2'-0" |
| 192 | 12x8 | 5'-0" | #6 | 25'-6" | #5 | 2'-10" | 5'-9" | 8'-7" | #5 | 2'-10" | 5'-10" | 8'-8" | #6 | 24'-9" | #5 | 7'-5½" | #5 | 3'-8½" | #5 | 7'-5½" | #5 | 3'-8½" | | | | | | | | |
| | | 10'-0" | #6 | 25'-6" | #4 | 2'-6" | 5'-8½" | 8'-2½" | #4 | 2'-6" | 5'-9½" | 8'-3½" | #6 | 24'-9" | #4 | 7'-7" | #4 | 3'-6" | #4 | 7'-7" | #4 | 3'-6" | | | | | | | | |
| | | 15'-0" | #6 | 25'-6" | #4 | 2'-6" | 5'-11½" | 8'-5½" | #4 | 2'-6" | 6'-2" | 8'-8" | #6 | 24'-9" | #4 | 7'-10" | #4 | 3'-10½" | #4 | 7'-10" | #4 | 3'-10½" | | | | | | | | |
| | | 20'-0" | #8 | 25'-7" | #5 | 2'-10½" | 5'-11½" | 8'-10" | #5 | 2'-10½" | 5'-11½" | 8'-10" | #8 | 24'-9½" | #5 | 7'-8" | #5 | 3'-10" | #5 | 7'-8" | #5 | 3'-10" | #5 | 9" | 9" | 2'-0¾" | #5 | 7½" | 7½" | 1'-10⅝" |
| | | 25'-0" | #7 | 25'-6½" | #5 | 2'-10½" | 6'-0½" | 8'-11" | #5 | 2'-10½" | 6'-1" | 8'-11½" | #8 | 24'-9" | #4 | 7'-9" | #4 | 3'-7½" | #4 | 7'-9" | #4 | 3'-7½" | #5 | 10" | 10" | 2'-2¼" | #5 | 9" | 9" | 2'-0¾" |
| | | 30'-0" | #7 | 25'-8½" | #5 | 3'-0½" | 6'-1½" | 9'-2" | #5 | 3'-0½" | 6'-2½" | 9'-3" | #8 | 24'-9" | #4 | 7'-10" | #4 | 3'-9" | #4 | 7'-10" | #4 | 3'-9" | #4 | 11" | 11" | 2'-3 9/16" | #4 | 10½" | 10½" | 2'-2⅞" |
| 224 | 14x8 | 5'-0" | #7 | 29'-6" | #5 | 2'-10" | 5'-10½" | 8'-8½" | #5 | 2'-10" | 5'-11" | 8'-9" | #6 | 28'-9" | #5 | 7'-7" | #5 | 3'-9½" | #5 | 7'-7" | #5 | 3'-9½" | | | | | | | | |
| | | 10'-0" | #6 | 29'-6" | #5 | 2'-10" | 6'-0" | 8'-10" | #5 | 2'-10" | 6'-1½" | 8'-11½" | #7 | 28'-9" | #4 | 7'-8½" | #4 | 3'-8" | #4 | 7'-8½" | #4 | 3'-8" | | | | | | | | |
| | | 15'-0" | #8 | 29'-6" | #6 | 3'-2" | 6'-1½" | 9'-3½" | #6 | 3'-2" | 6'-1½" | 9'-3½" | #8 | 28'-9" | #4 | 7'-8" | #4 | 3'-6" | #4 | 7'-8" | #4 | 3'-6" | #5 | 9" | 9" | 2'-0¾" | #5 | 7½" | 7½" | 1'-10⅝" |
| | | 20'-0" | #8 | 29'-8" | #5 | 3'-0" | 6'-1½" | 9'-1½" | #5 | 3'-0" | 6'-1½" | 9'-1½" | #8 | 28'-9" | #4 | 7'-10" | #4 | 3'-8" | #4 | 7'-10" | #4 | 3'-8" | #5 | 11" | 11" | 2'-3 9/16" | #5 | 9½" | 9½" | 2'-1 9/16" |
| | | 25'-0" | #8 | 29'-8½" | #6 | 3'-4½" | 6'-4½" | 9'-9" | #6 | 3'-4½" | 6'-5½" | 9'-10" | #9 | 28'-9" | #4 | 7'-11" | #4 | 3'-10" | #4 | 7'-11" | #4 | 3'-10" | #4 | 1'-0" | 1'-0" | 2'-5" | #4 | 11½" | 11½" | 2'-4¼" |
| | | 30'-0" | #8 | 29'-9" | #6 | 3'-5" | 6'-5½" | 9'-10½" | #6 | 3'-5" | 6'-7" | 10'-0" | #9 | 28'-9" | #5 | 8'-0" | #5 | 4'-3½" | #5 | 8'-0" | #5 | 4'-3½" | #4 | 1'-1" | 1'-1" | 2'-6⅜" | #4 | 1'-1" | 1'-1" | 2'-6⅜" |
| 256 | 16x8 | 5'-0" | #7 | 33'-6½" | #5 | 2'-10½" | 5'-11½" | 8'-10" | #5 | 2'-10½" | 6'-0" | 8'-10½" | #7 | 32'-9" | #5 | 7'-8" | #5 | 3'-10½" | #5 | 7'-8" | #5 | 3'-10½" | | | | | | | | |
| | | 10'-0" | #7 | 33'-7" | #5 | 2'-11" | 6'-2" | 9'-1" | #5 | 2'-11" | 6'-3½" | 9'-2½" | #7 | 32'-9" | #5 | 7'-10½" | #5 | 4'-2" | #5 | 7'-10½" | #5 | 4'-2" | | | | | | | | |
| | | 15'-0" | #8 | 33'-8" | #6 | 3'-4" | 6'-3" | 9'-7" | #6 | 3'-4" | 6'-3" | 9'-7" | #9 | 32'-9" | #4 | 7'-9½" | #4 | 3'-7½" | #4 | 7'-9½" | #4 | 3'-7½" | #5 | 10½" | 10½" | 2'-2⅞" | #5 | 9" | 9" | 2'-0¾" |
| | | 20'-0" | #8 | 33'-9" | #6 | 3'-5" | 6'-5½" | 9'-10½" | #6 | 3'-5" | 6'-5½" | 9'-10½" | #9 | 32'-9" | #4 | 8'-0" | #4 | 3'-10" | #4 | 8'-0" | #4 | 3'-10" | #5 | 1'-1" | 1'-1" | 2'-6⅜" | #5 | 11½" | 11½" | 2'-4¼" |
| | | 25'-0" | #8 | 33'-10" | #6 | 3'-6" | 6'-7½" | 10'-1½" | #6 | 3'-6" | 6'-7½" | 10'-1½" | #9 | 32'-9" | #4 | 8'-2" | #4 | 4'-0" | #4 | 8'-2" | #4 | 4'-0" | #4 | 1'-3" | 1'-3" | 2'-9 3/16" | #4 | 1'-1½" | 1'-1½" | 2'-7⅛" |
| | | 30'-0" | #9 | 34'-0" | #6 | 3'-7" | 6'-8½" | 10'-3½" | #6 | 3'-7" | 6'-9½" | 10'-4½" | #9 | 32'-10" | #4 | 8'-3" | #4 | 4'-2" | #4 | 8'-3" | #4 | 4'-2" | #5 | 1'-4" | 1'-4" | 2'-10⅜" | #5 | 1'-3½" | 1'-3½" | 2'-9 15/16" |

MISSISSIPPI DEPARTMENT OF TRANSPORTATION

BASIC BARREL DETAILS FOR DOUBLE CELL BOX CULVERT

HEIGHT 8 FT.

SPANS 16 - 32 FT.

SHT. 3 OF 3

WORKING NUMBER IBD-8

SHEET NUMBER 7120

REVISIONS | BY | DATE

DESIGNER PAUL DEES, P.E. CHECKER PICKERING FIRM, INC.
DETAILER PAUL DEES, P.E. ISSUE DATE 1/1/2015

DIRECTOR OF STRUCTURES, STATE BRIDGE ENGINEER - JUSTIN WALKER PE.
DEP. DIR. OF STRUCTURES, ASST. STATE BRIDGE ENGINEER - SCOTT WESTERFIELD PE.

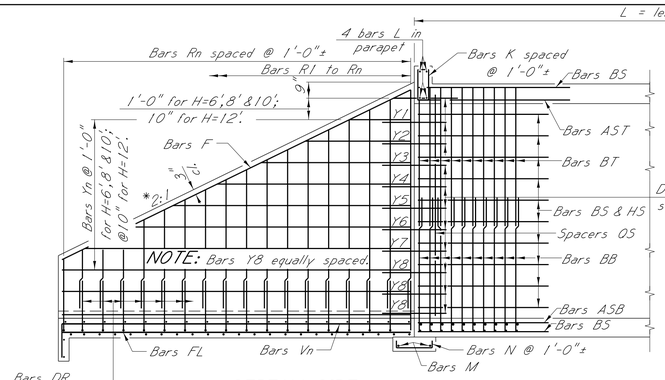


## STREAM SIDE

Showing reinforcement in stream side of wingwall

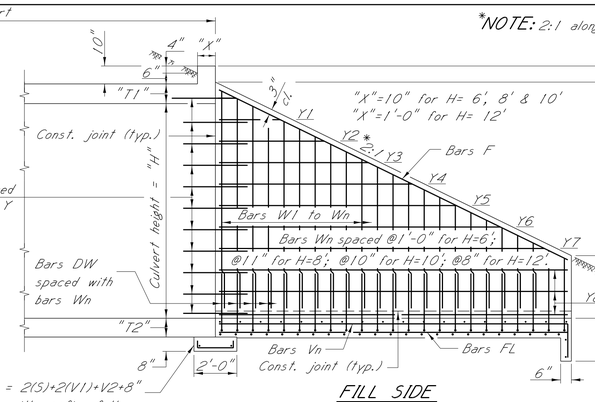


## FILL SIDE

Showing reinforcement in fill side of wingwall

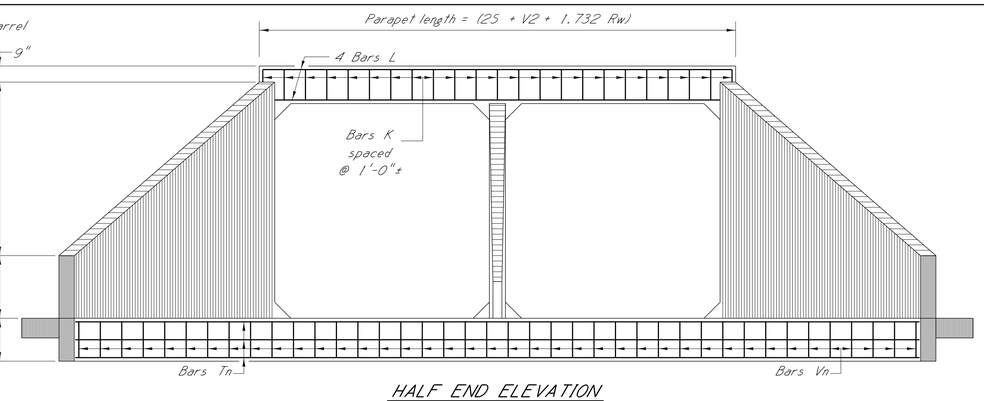


## HALF END ELEVATION

Showing reinforcement in parapet & toe wall

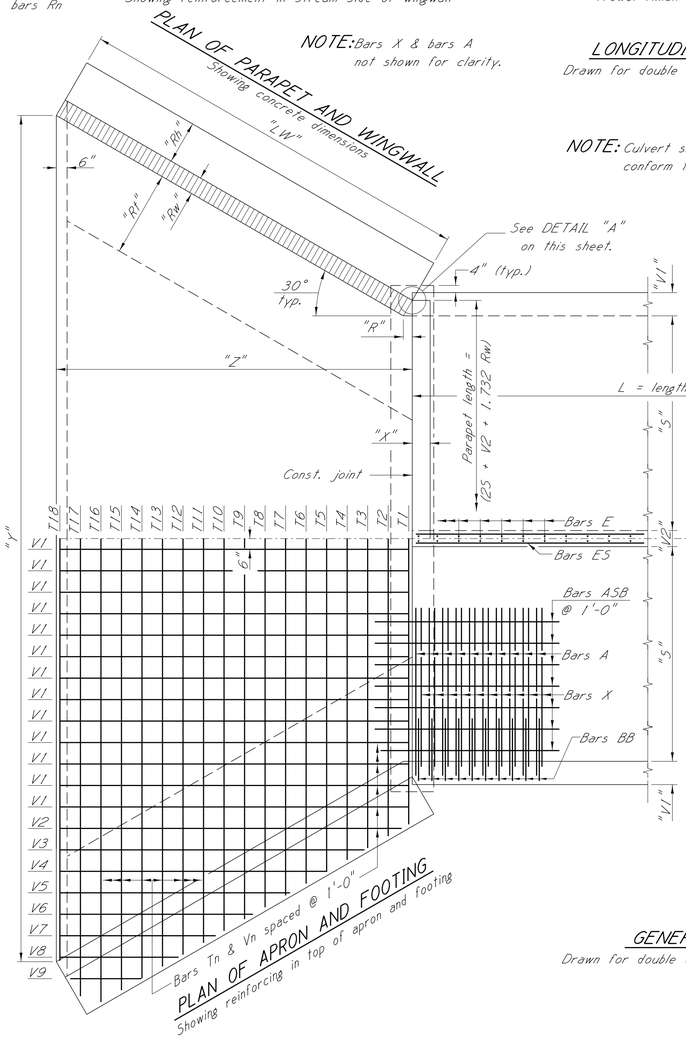


NOTE: Bars X & bars A not shown for clarity.

## LONGITUDINAL SECTION

Drawn for double cell 10' x 10' culvert

NOTE: Culvert shall be sloped to conform to gradient of stream.

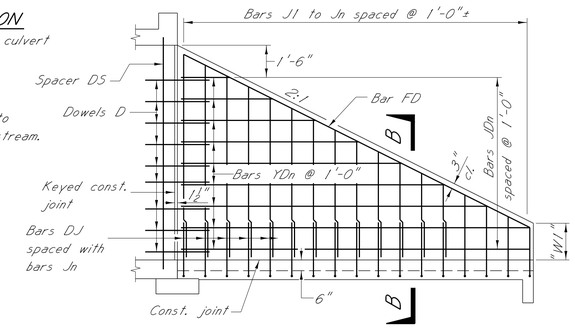


## SECTION A-A

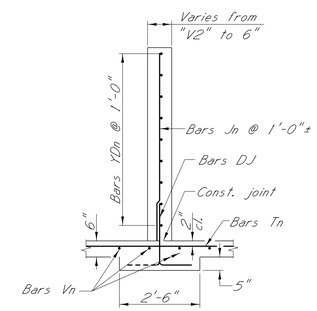


## SECTION B-B

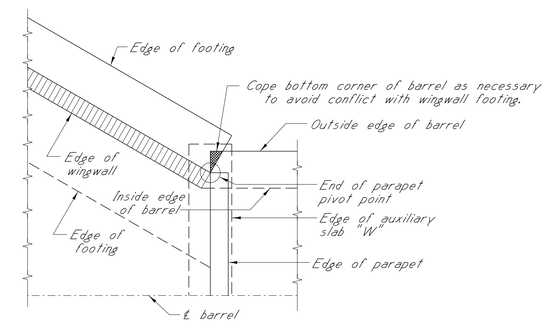


## DETAIL "A"

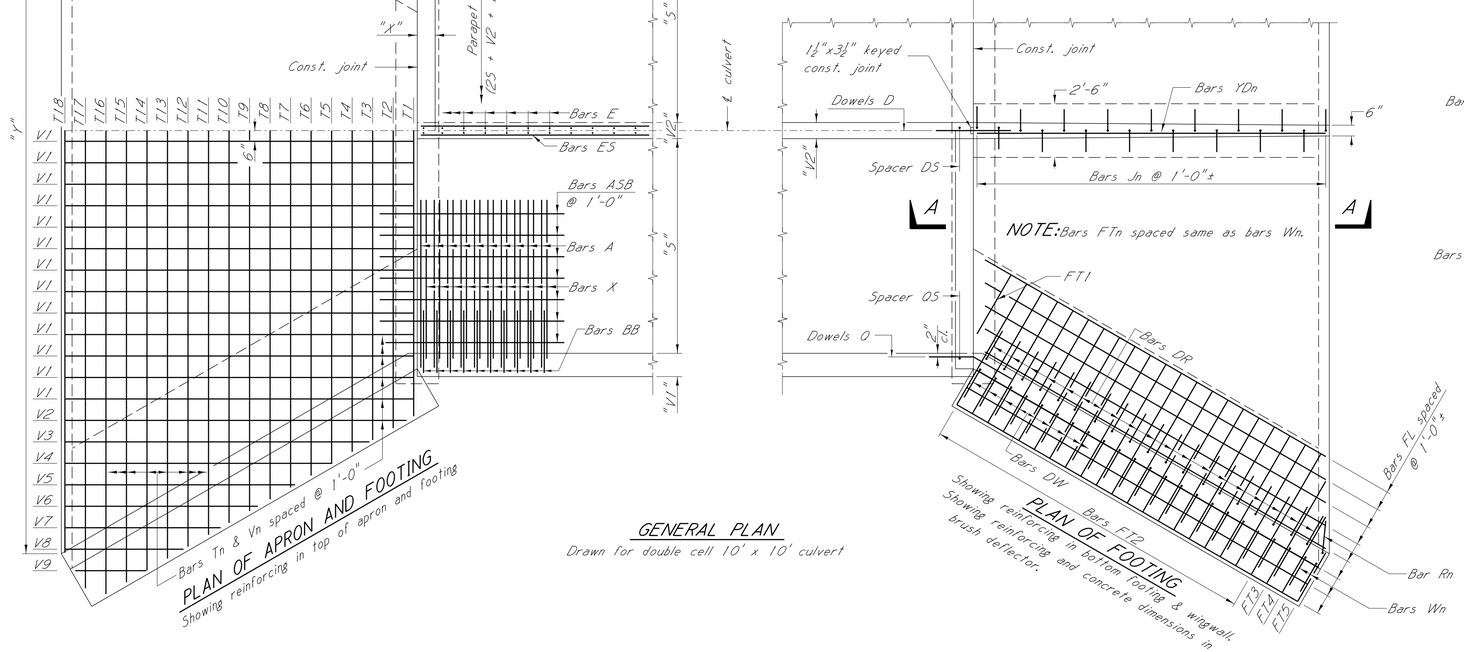


## GENERAL PLAN

Drawn for double cell 10' x 10' culvert

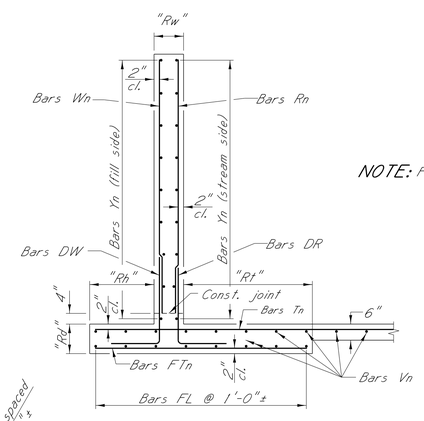


## CROSS SECTION WINGWALL

NOTE: For bar bending details and quantities, see drawings IWS-6-2W, IWS-8-2W, IWS-10-2W & IWS-12-2W.

**SPECIAL PROVISIONS REQUIRED:**
Concrete Bridges And Structures . . . . . No. 907-804

**DESIGN DATA:**
Specifications. . . . . A.A.S.H.T.O., LRFD 2012.
Loading. . . . . HL-93.
Concrete. . . . . .Class "B" (3,500 p.s.i.)

| BY | REVISIONS | DATE |
|---|---|---|
| | | |

MISSISSIPPI DEPARTMENT OF TRANSPORTATION

# WINGS WITH 2:1 SLOPE FOR BASIC CULVERT DRAWING DOUBLE CELL 0° SKEW DETAILS

HEIGHTS 6-12 FT.

SPANS 12-40 FT.

SHT. 1 OF 1

WORKING NUMBER IWD-2W

SHEET NUMBER 7127

DESIGNER William K. McBeath, P.E. CHECKER B. Keith Carr P.E.
DETAILER Wesley Phillips, E.I. ISSUE DATE 01/01/2015
DIRECTOR OF STRUCTURES, STATE BRIDGE ENGINEER - JUSTIN WALKER PE.
DEP. DIR. OF STRUCTURES, ASST. STATE BRIDGE ENGINEER - SCOTT WESTERFIELD PE.

| HEADWALL DIMENSIONS | | | | | | | | | | | | | | | | | |
|---|---|---|---|---|---|---|---|---|---|---|---|---|---|---|---|---|---|
| CULVERT HEIGHT "H" | "J" | "LW" | "R" | "Z" | "Rd" | "Rw" | "Rt" | "Rh" | "W1" | "BDL" | "Y" CLEAR SPAN | | | | | |
| | | | | | | | | | | | 6' | 8' | 10' | 12' | 14' | 16' |
| 6'-0" | 5'-6" | 12'-8 1/2" | 0'-4 1/2" | 11'-4 9/16" | 11" | 9" | 3'-0" | 2'-0" | 0'-6" | 11'-4 9/16" | 24'-8 1/2"+V2 | 28'-8 1/2"+V2 | 32'-8 1/2"+V2 | 36'-8 1/2"+V2 | 40'-8 1/2"+V2 | 44'-8 1/2"+V2 |

NOTE: Total headwall quantities include wingwalls, apron, wingwall footings and parapet.

| AREA OF OPENING sq. ft. | SIZE OF CULVERT ft. x ft. "S"x"H" | Cover | T1 | T2 | V1 | V2 | W | ESTIMATED QUANTITIES: TOTAL HEADWALL CONC. cu. yd. | TOTAL HEADWALL REINF. STEEL lbs. | BRUSH DEFLECTOR CONC. cu. yd. | BRUSH DEFLECTOR REINF. STEEL lbs. | 1 AUX. SLAB "W" CONC. cu. yd. | 1 AUX. SLAB "W" REINF. STEEL lbs. | 1 SQUARE COLLAR CONC. cu. yd. | 1 SQUARE COLLAR REINF. STEEL lbs. |
|---|---|---|---|---|---|---|---|---|---|---|---|---|---|---|---|
| 72 | 6x6 | 5'-0" | 9" | 9" | 9" | 9" | 1'-4" | 11.5541 | 1547.025 | 1.2374 | 177.887 | 0.7366 | 44.422 | 1.9375 | 740.689 |
| | | 10'-0" | 9" | 9" | 9" | 9" | 1'-4" | 11.5541 | 1547.025 | 1.2374 | 177.887 | 0.7366 | 44.422 | 1.9375 | 740.689 |
| | | 15'-0" | 9" | 9" | 9" | 9" | 1'-4" | 11.5541 | 1547.025 | 1.2374 | 177.887 | 0.7366 | 44.422 | 1.9375 | 740.689 |
| | | 20'-0" | 9" | 10 1/2" | 9" | 9" | 1'-4" | 11.6237 | 1547.025 | 1.2374 | 177.887 | 0.7366 | 44.422 | 1.9479 | 743.850 |
| | | 25'-0" | 10 1/2" | 1'-0" | 9" | 9" | 1'-5 1/2" | 11.7826 | 1555.685 | 1.2374 | 177.971 | 0.7366 | 44.422 | 1.9688 | 750.173 |
| | | 30'-0" | 11 1/2" | 1'-1" | 9" | 9" | 1'-6 1/2" | 11.8886 | 1561.459 | 1.2374 | 178.026 | 0.7366 | 44.422 | 1.9826 | 754.388 |
| 96 | 8x6 | 5'-0" | 9" | 9 1/2" | 9" | 9" | 1'-4" | 12.6775 | 1642.437 | 1.2374 | 177.887 | 0.9342 | 56.001 | 2.2743 | 872.715 |
| | | 10'-0" | 9" | 11" | 9" | 9" | 1'-4" | 12.7656 | 1642.437 | 1.2374 | 177.887 | 0.9342 | 56.001 | 2.2847 | 876.398 |
| | | 15'-0" | 11" | 1'-1" | 9" | 9" | 1'-6" | 13.0022 | 1654.875 | 1.2374 | 177.998 | 0.9342 | 56.001 | 2.3125 | 886.219 |
| | | 20'-0" | 1'-0" | 1'-2" | 9" | 9" | 1'-7" | 13.1205 | 1661.094 | 1.2374 | 178.054 | 0.9342 | 56.001 | 2.3264 | 891.129 |
| | | 25'-0" | 1'-2" | 1'-4" | 9" | 9" | 1'-9" | 13.3571 | 1673.532 | 1.2374 | 178.165 | 0.9342 | 56.001 | 2.3542 | 900.950 |
| | | 30'-0" | 1'-4" | 1'-5 1/2" | 9" | 9" | 1'-11" | 13.5644 | 1685.970 | 1.2374 | 178.277 | 0.9342 | 56.001 | 2.3785 | 909.543 |
| 120 | 10x6 | 5'-0" | 9" | 10" | 9" | 9" | 1'-4" | 13.8133 | 1737.850 | 1.2374 | 177.887 | 1.1317 | 67.579 | 2.6111 | 1005.089 |
| | | 10'-0" | 10" | 1'-0 1/2" | 9" | 9" | 1'-5" | 14.0505 | 1744.514 | 1.2374 | 177.943 | 1.1317 | 67.579 | 2.6354 | 1014.899 |
| | | 15'-0" | 1'-1" | 1'-3 1/2" | 9" | 9" | 1'-8" | 14.4425 | 1764.507 | 1.2374 | 178.110 | 1.1317 | 67.579 | 2.6771 | 1031.716 |
| | | 20'-0" | 1'-4" | 1'-6" | 9" | 9" | 1'-11" | 14.7989 | 1784.500 | 1.2374 | 178.277 | 1.1317 | 67.579 | 2.7153 | 1047.132 |
| | | 25'-0" | 11 1/2" | 1'-0 1/2" | 9" | 9" | 1'-6 1/2" | 14.1399 | 1754.511 | 1.2374 | 178.026 | 1.1317 | 67.579 | 2.6458 | 1019.103 |
| | | 30'-0" | 1'-0" | 1'-1 1/2" | 9" | 9" | 1'-7" | 14.2408 | 1757.843 | 1.2374 | 178.054 | 1.1317 | 67.579 | 2.6563 | 1023.308 |
| 144 | 12x6 | 5'-0" | 10 1/2" | 11 1/2" | 9" | 9" | 1'-5 1/2" | 15.1342 | 1843.927 | 1.2374 | 177.971 | 1.3292 | 79.158 | 2.9653 | 1145.687 |
| | | 10'-0" | 1'-0" | 1'-1 1/2" | 9" | 9" | 1'-7" | 15.3904 | 1854.592 | 1.2374 | 178.054 | 1.3292 | 79.158 | 2.9896 | 1156.714 |
| | | 15'-0" | 1'-2 1/2" | 1'-5 1/2" | 9" | 9" | 1'-9 1/2" | 15.8730 | 1872.366 | 1.2374 | 178.193 | 1.3292 | 79.158 | 3.0347 | 1177.192 |
| | | 20'-0" | 1'-0 1/2" | 1'-1" | 9" | 9" | 1'-7 1/2" | 15.3785 | 1858.147 | 1.2374 | 178.082 | 1.3292 | 79.158 | 2.9896 | 1156.714 |
| | | 25'-0" | 1'-1" | 1'-2" | 9" | 9" | 1'-8" | 15.4917 | 1861.701 | 1.2374 | 178.110 | 1.3292 | 79.158 | 3.0000 | 1161.439 |
| | | 30'-0" | 1'-2" | 1'-3 1/2" | 9" | 9" | 1'-9" | 15.6764 | 1868.811 | 1.2374 | 178.165 | 1.3292 | 79.158 | 3.0174 | 1169.316 |
| 168 | 14x6 | 5'-0" | 11 1/2" | 1'-0 1/2" | 9" | 9" | 1'-6 1/2" | 16.4144 | 1947.563 | 1.2374 | 178.026 | 1.5267 | 90.737 | 3.3125 | 1284.873 |
| | | 10'-0" | 1'-1 1/2" | 1'-3" | 9 1/2" | 9" | 1'-8 1/2" | 16.7743 | 1962.673 | 1.2374 | 178.138 | 1.5309 | 90.848 | 3.3507 | 1302.113 |
| | | 15'-0" | 1'-0" | 1'-1" | 10 1/2" | 9" | 1'-7" | 16.4941 | 1951.340 | 1.2374 | 178.054 | 1.5391 | 91.071 | 3.3403 | 1292.868 |
| | | 20'-0" | 1'-3" | 1'-3" | 9" | 9" | 1'-10" | 16.8624 | 1974.005 | 1.2374 | 178.221 | 1.5267 | 90.737 | 3.3542 | 1305.862 |
| | | 25'-0" | 1'-3" | 1'-4 1/2" | 10" | 9" | 1'-10" | 17.0096 | 1974.005 | 1.2374 | 178.221 | 1.5350 | 90.959 | 3.3785 | 1314.107 |
| | | 30'-0" | 1'-4" | 1'-6" | 10" | 9" | 1'-11" | 17.2138 | 1981.560 | 1.2374 | 178.277 | 1.5350 | 90.959 | 3.3958 | 1322.852 |
| 192 | 16x6 | 5'-0" | 1'-1" | 1'-1 1/2" | 10" | 9" | 1'-8" | 17.7508 | 2056.089 | 1.2374 | 178.110 | 1.7325 | 102.538 | 3.6771 | 1430.370 |
| | | 10'-0" | 1'-3 1/2" | 1'-4 1/2" | 10 1/2" | 9" | 1'-10 1/2" | 18.2279 | 2076.090 | 1.2374 | 178.249 | 1.7366 | 102.649 | 3.7222 | 1453.021 |
| | | 15'-0" | 1'-2" | 1'-3" | 9" | 9" | 1'-9" | 17.9709 | 2064.090 | 1.2374 | 178.165 | 1.7243 | 102.315 | 3.6806 | 1436.986 |
| | | 20'-0" | 1'-4 1/2" | 1'-4 1/2" | 9" | 9" | 1'-11 1/2" | 18.2820 | 2084.091 | 1.2374 | 178.305 | 1.7243 | 102.315 | 3.7083 | 1452.370 |
| | | 25'-0" | 1'-5 1/2" | 1'-6 1/2" | 9" | 9" | 2'-0 1/2" | 18.5578 | 2092.091 | 1.2374 | 178.360 | 1.7243 | 102.315 | 3.7292 | 1463.907 |
| | | 30'-0" | 1'-7 1/2" | 1'-8 1/2" | 9" | 9" | 2'-2 1/2" | 18.8932 | 2108.092 | 1.2374 | 178.472 | 1.7243 | 102.315 | 3.7569 | 1479.290 |

## GENERAL NOTES:

Specifications: Mississippi Standard Specifications For Road And Bridge Construction, 2004.
All concrete shall be Class "B".
Concrete surfaces shall be finished in accordance with Sub-Section 804.03.19.6.2
Expansion joint material shall be bituminous fiber type unless otherwise noted.
All exposed corners shall be chamfered 3/4".
Reinforcing steel shall be placed 2" clear minimum from the surface of the concrete unless otherwise noted, and all reinforcing shall be adequately supported from the forms.
All bars shall be accurately spaced and securely wired at each intersection before placing concrete.
Bar bending details shall be in accordance with "Manual of Standard Practice for Detailing Reinforced Concrete Structures" (ACI 315R-94).
Reinforcement order lists and required placing plans shall be furnished in accordance with Section 805 of the Mississippi Standard Specifications. Partial submittals are not acceptable.
Reinforcing steel shall be ASTM A615, Grade 60, unless otherwise noted.
Horizontal construction joints shall be placed only at the locations shown, and the concrete shall be allowed to set a minimum period of two hours before continuing the pour.
Auxiliary slabs "W" and vertical construction joints at the wings shall be placed in all culverts regardless of length.
The quantities shown will be used as a basis for final payment unless this drawing is modified.

DEPARTMENT OF TRANSPORTATION MDOT MISSISSIPPI

REVISIONS | BY | DATE

MISSISSIPPI DEPARTMENT OF TRANSPORTATION

WINGS WITH 2:1 SLOPE FOR BASIC CULVERT DRAWING DOUBLE CELL 0° SKEW DETAILS

HEIGHT 6 FT.

SPANS 12-32 FT.

SHT. 1 OF 2

WORKING NUMBER IWD-6-2W

SHEET NUMBER 7128

DESIGNER William K. McBeath, P.E. CHECKER B. Keith Carr P.E.
DETAILER Wesley Phillips, E.I. ISSUE DATE 01/01/2015
DIRECTOR OF STRUCTURES, STATE BRIDGE ENGINEER - JUSTIN WALKER PE.
DEP. DIR. OF STRUCTURES, ASST. STATE BRIDGE ENGINEER - SCOTT WESTERFIELD PE.

HEIGHT = 6 FT.

BAR LISTS FOR WINGS, FOOTING, PARAPET, APRON & AUXILIARY SLAB "W"

| BAR | SIZE | NO. REQUIRED SPAN 6' | 8' | 10' | 12' | 14' | 16' | | | DIM. X | DIM. Y | LENGTH |
|---|---|---|---|---|---|---|---|---|---|---|---|---|
| T1 | #4 | 1 | 1 | 1 | 1 | 1 | 1 | | | | | 2S+V2+5'-8 ½" |
| T2 | #4 | 1 | 1 | 1 | 1 | 1 | 1 | | | | | 2S+V2+6'-9 ½" |
| T3 | #4 | 1 | 1 | 1 | 1 | 1 | 1 | | | | | 2S+V2+7'-10" |
| T4 | #4 | 1 | 1 | 1 | 1 | 1 | 1 | | | | | 2S+V2+8'-11" |
| T5 | #4 | 1 | 1 | 1 | 1 | 1 | 1 | | | | | 2S+V2+9'-11 ½" |
| T6 | #4 | 1 | 1 | 1 | 1 | 1 | 1 | | | | | 2S+V2+11'-0 ½" |
| T7 | #4 | 1 | 1 | 1 | 1 | 1 | 1 | | | | | 2S+V2+12'-1" |
| T8 | #4 | 1 | 1 | 1 | 1 | 1 | 1 | | | | | 2S+V2+13'-2" |
| T9 | #4 | 1 | 1 | 1 | 1 | 1 | 1 | | | | | 2S+V2+14'-3" |
| T10 | #4 | 1 | 1 | 1 | 1 | 1 | 1 | | | | | 2S+V2+15'-3 ½" |
| T11 | #4 | 1 | 1 | 1 | 1 | 1 | 1 | | | | | 2S+V2+16'-4 ½" |
| T12 | #4 | 1 | 1 | 1 | 1 | 1 | 1 | | | | | 2S+V2+15'-9 ½" |
| T13 | #4 | 3 | 3 | 3 | 3 | 3 | 3 | | | | | 2S+V2+12'-7 ½" |
| V1 | #4 | 18 | 22 | 26 | 30 | 34 | 38 | | | 11'-0 ½" | 1'-8" | 12'-8 ½" |
| V2 | #4 | 2 | 2 | 2 | 2 | 2 | 2 | | | 10'-7" | 1'-8" | 12'-3" |
| V3 | #4 | 2 | 2 | 2 | 2 | 2 | 2 | | | 8'-10 ½" | 1'-8" | 10'-6 ½" |
| V4 | #4 | 2 | 2 | 2 | 2 | 2 | 2 | | | 7'-1 ½" | 1'-8" | 8'-9 ½" |
| V5 | #4 | 2 | 2 | 2 | 2 | 2 | 2 | | | 5'-5" | 1'-8" | 7'-1" |
| V6 | #4 | 2 | 2 | 2 | 2 | 2 | 2 | | | 3'-2 ½" | | 3'-2 ½" |
| FT1 | #5 | 2 | 2 | 2 | 2 | 2 | 2 | | | | | 1'-10 ½" |
| FT2 | #5 | 24 | 24 | 24 | 24 | 24 | 24 | | | | | 5'-5" |
| FT3 | #5 | 2 | 2 | 2 | 2 | 2 | 2 | | | | | 4'-2" |
| FT4 | #5 | 2 | 2 | 2 | 2 | 2 | 2 | | | | | 2'-6 ½" |
| FL | #4 | 14 | 14 | 14 | 14 | 14 | 14 | | | | | 12'-4 ½" |
| W1 | #5 | 2 | 2 | 2 | 2 | 2 | 2 | | | | W+4'-10" | W+4'-10" |
| W2 | #5 | 2 | 2 | 2 | 2 | 2 | 2 | | | | W+4'-5" | W+4'-5" |
| W3 | #5 | 2 | 2 | 2 | 2 | 2 | 2 | | | | W+4'-0" | W+4'-0" |
| W4 | #5 | 2 | 2 | 2 | 2 | 2 | 2 | | | | W+3'-7" | W+3'-7" |
| W5 | #5 | 2 | 2 | 2 | 2 | 2 | 2 | | | | W+3'-2" | W+3'-2" |
| W6 | #5 | 2 | 2 | 2 | 2 | 2 | 2 | | | | W+2'-9" | W+2'-9" |
| W7 | #5 | 2 | 2 | 2 | 2 | 2 | 2 | | | | W+2'-4" | W+2'-4" |
| W8 | #5 | 2 | 2 | 2 | 2 | 2 | 2 | | | | W+1'-11 ½" | W+1'-11 ½" |
| W9 | #5 | 2 | 2 | 2 | 2 | 2 | 2 | | | | W+1'-6 ½" | W+1'-6 ½" |
| W10 | #5 | 2 | 2 | 2 | 2 | 2 | 2 | | | 1'-6" | W+2'-1" | W+3'-7" |
| W11 | #5 | 2 | 2 | 2 | 2 | 2 | 2 | | | 1'-6" | W+1'-8 ½" | W+3'-2 ½" |
| W12 | #5 | 2 | 2 | 2 | 2 | 2 | 2 | | | 1'-6" | W+1'-3 ½" | W+2'-9 ½" |
| W13 | #5 | 2 | 2 | 2 | 2 | 2 | 2 | | | 1'-6" | W+0'-10 ½" | W+2'-4½" |
| W14 | #5 | 2 | 2 | 2 | 2 | 2 | 2 | | | 1'-6" | W+0'-5 ½" | W+1'-11½" |
| R1 | #4 | 2 | 2 | 2 | 2 | 2 | 2 | | | | W+4'-10" | W+4'-10" |
| R2 | #4 | 2 | 2 | 2 | 2 | 2 | 2 | | | | W+4'-5" | W+4'-5" |
| R3 | #4 | 2 | 2 | 2 | 2 | 2 | 2 | | | | W+4'-0" | W+4'-0" |
| R4 | #4 | 2 | 2 | 2 | 2 | 2 | 2 | | | | W+3'-7" | W+3'-7" |
| R5 | #4 | 2 | 2 | 2 | 2 | 2 | 2 | | | | W+3'-2" | W+3'-2" |
| R6 | #4 | 2 | 2 | 2 | 2 | 2 | 2 | | | | W+2'-9" | W+2'-9" |
| R7 | #4 | 2 | 2 | 2 | 2 | 2 | 2 | | | | W+2'-4" | W+2'-4" |
| R8 | #4 | 2 | 2 | 2 | 2 | 2 | 2 | | | | W+1'-11 ½" | W+1'-11 ½" |
| R9 | #4 | 2 | 2 | 2 | 2 | 2 | 2 | | | | W+1'-6 ½" | W+1'-6 ½" |
| R10 | #4 | 2 | 2 | 2 | 2 | 2 | 2 | | | | W+1'-1 ½" | W+1'-1 ½" |
| R11 | #4 | 2 | 2 | 2 | 2 | 2 | 2 | | | 1'-6" | W+1'-8 ½" | W+3'-2 ½" |
| R12 | #4 | 2 | 2 | 2 | 2 | 2 | 2 | | | 1'-6" | W+1'-3 ½" | W+2'-9 ½" |
| R13 | #4 | 2 | 2 | 2 | 2 | 2 | 2 | | | 1'-6" | W+0'-10 ½" | W+2'-4 ½" |
| R14 | #4 | 2 | 2 | 2 | 2 | 2 | 2 | | | 1'-6" | W+0'-5 ½" | W+1'-11 ½" |
| Y1 | #4 | 4 | 4 | 4 | 4 | 4 | 4 | | | | | 3'-3" |
| Y2 | #4 | 4 | 4 | 4 | 4 | 4 | 4 | | | | | 5'-6 ½" |
| Y3 | #4 | 4 | 4 | 4 | 4 | 4 | 4 | | | | | 7'-10 ½" |
| Y4 | #4 | 4 | 4 | 4 | 4 | 4 | 4 | | | | | 10'-2" |
| Y5 | #4 | 12 | 12 | 12 | 12 | 12 | 12 | | | | | 12'-4 ½" |
| F | #4 | 4 | 4 | 4 | 4 | 4 | 4 | | | | | 13'-6" |
| N | #4 | 16 | 20 | 24 | 28 | 32 | 36 | | | 1'-8" | 0'-4" | 2'-4" |
| M | #4 | 2 | 2 | 2 | 2 | 2 | 2 | | | | | 2S+2V1+V2+0'-4" |
| K | #4 | 15 | 19 | 23 | 27 | 31 | 35 | | | 0'-6" | T1+0'-6" | 2T1+2'-6" |
| L | #4 | 4 | 4 | 4 | 4 | 4 | 4 | | | | | 2S+V2+0'-11 ½" |
| O | #7 | 16 | 16 | 16 | 16 | 16 | 16 | | | 2'-11 ½" | 2'-11 ½" | 5'-11" |
| OS | #4 | 2 | 2 | 2 | 2 | 2 | 2 | | | | | T1+6'-0" |

HEIGHT = 6 FT.

BAR LISTS FOR WINGS, FOOTING, PARAPET, APRON & AUXILIARY SLAB "W"

| BAR | SIZE | NO. REQUIRED SPAN 6' | 8' | 10' | 12' | 14' | 16' | | | DIM. X | DIM. Y | LENGTH |
|---|---|---|---|---|---|---|---|---|---|---|---|---|
| DR | #4 | 20 | 20 | 20 | 20 | 20 | 20 | | | 1'-6" | 2'-5" | 3'-11" |
| DW | #5 | 18 | 18 | 18 | 18 | 18 | 18 | | | 1'-6" | 2'-9" | 4'-3" |

BAR LISTS FOR UPSTREAM BRUSH DEFLECTOR

| BAR | SIZE | NO. REQ'D | DIM. X | DIM. Y | LENGTH |
|---|---|---|---|---|---|
| D | #7 | 5 | | | 5'-4" |
| DS | #4 | 1 | | | 6'-0"+T1 |
| J1 | #5 | 1 | | W1+5'-1 ½" | W1+5'-1 ½" |
| J2 | #5 | 1 | | W1+4'-8 ½" | W1+4'-8 ½" |
| J3 | #5 | 1 | | W1+4'-3" | W1+4'-3" |
| J4 | #5 | 1 | | W1+3'-9 ½" | W1+3'-9 ½" |
| J5 | #5 | 1 | | W1+3'-4 ½" | W1+3'-4 ½" |
| J6 | #5 | 1 | | W1+2'-11" | W1+2'-11" |
| J7 | #5 | 1 | | W1+2'-5 ½" | W1+2'-5 ½" |
| J8 | #5 | 1 | 1'-0" | W1+2'-9 ½" | W1+3'-9 ½" |
| J9 | #5 | 1 | 1'-0" | W1+2'-4" | W1+3'-4" |
| J10 | #5 | 1 | 1'-0" | W1+1'-10 ½" | W1+2'-10 ½" |
| J11 | #5 | 1 | 1'-0" | W1+1'-5 ½" | W1+2'-5 ½" |
| J12 | #5 | 1 | 1'-0" | W1+1'-0" | W1+2'-0" |
| J13 | #5 | 1 | 1'-0" | W1+0'-6 ½" | W1+1'-6 ½" |
| YD1 | #5 | 1 | | | 2'-4 ½" |
| YD2 | #5 | 1 | | | 4'-5" |
| YD3 | #5 | 1 | | | 6'-6" |
| YD4 | #5 | 1 | | | 8'-7" |
| YD5 | #5 | 1 | | | 10'-7 ½" |
| FD | #4 | 1 | | | 12'-3" |
| DJ | #5 | 7 | 1'-0" | 2'-6" | 3'-6" |

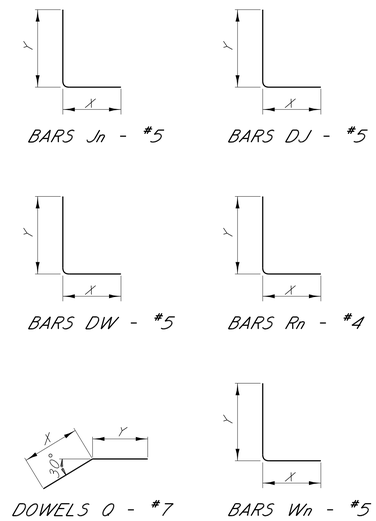


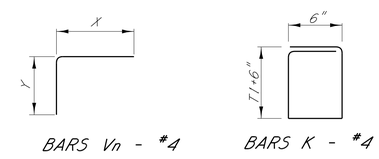


BAR BENDING DETAILS

Dimensions are out to out

MISSISSIPPI DEPARTMENT OF TRANSPORTATION

WINGS WITH 2:1 SLOPE FOR BASIC CULVERT DRAWING DOUBLE CELL 0° SKEW DETAILS

HEIGHT 6 FT.

SPANS 12-32 FT.

SHT. 2 OF 2

WORKING NUMBER IWD-6-2W

SHEET NUMBER 7129

BY | REVISIONS | DATE

DESIGNER William K. McBeath, P.E. CHECKER B. Keith Carr P.E.
DETAILER Wesley Phillips, Ed. ISSUE DATE 01/01/2015
DIRECTOR OF STRUCTURES, STATE BRIDGE ENGINEER - JUSTIN WALKER PE.
DEP. DIR. OF STRUCTURES, ASST. STATE BRIDGE ENGINEER - SCOTT WESTERFIELD PE.

DEPARTMENT OF TRANSPORTATION MDOT MISSISSIPPI

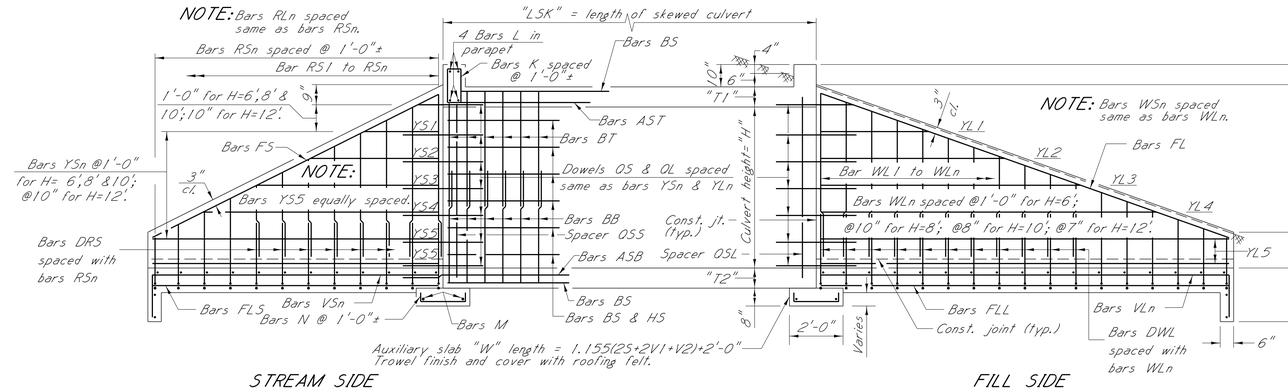


## STREAM SIDE

Showing reinforcement in stream side of "LW1" wingwall

## FILL SIDE

Showing reinforcement in fill side of "LW2" wingwall

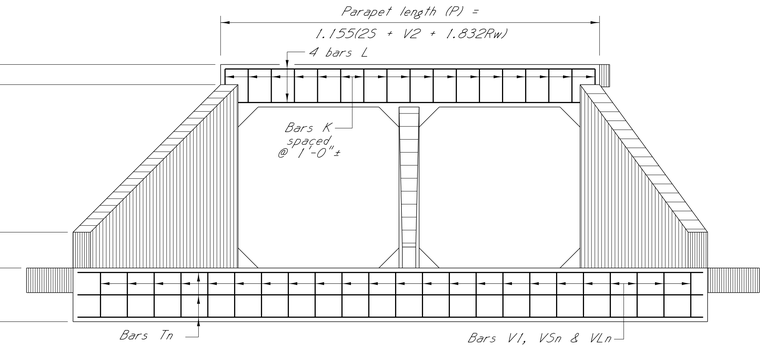


## END ELEVATION

Showing reinforcing in pararpet & toe wall

NOTE: Bars X & bars A not shown for clarity.

## LONGITUDINAL SECTION

Drawn for double cell 6' x 6' culvert

NOTE: Culvert shall be sloped to conform to gradient of stream.

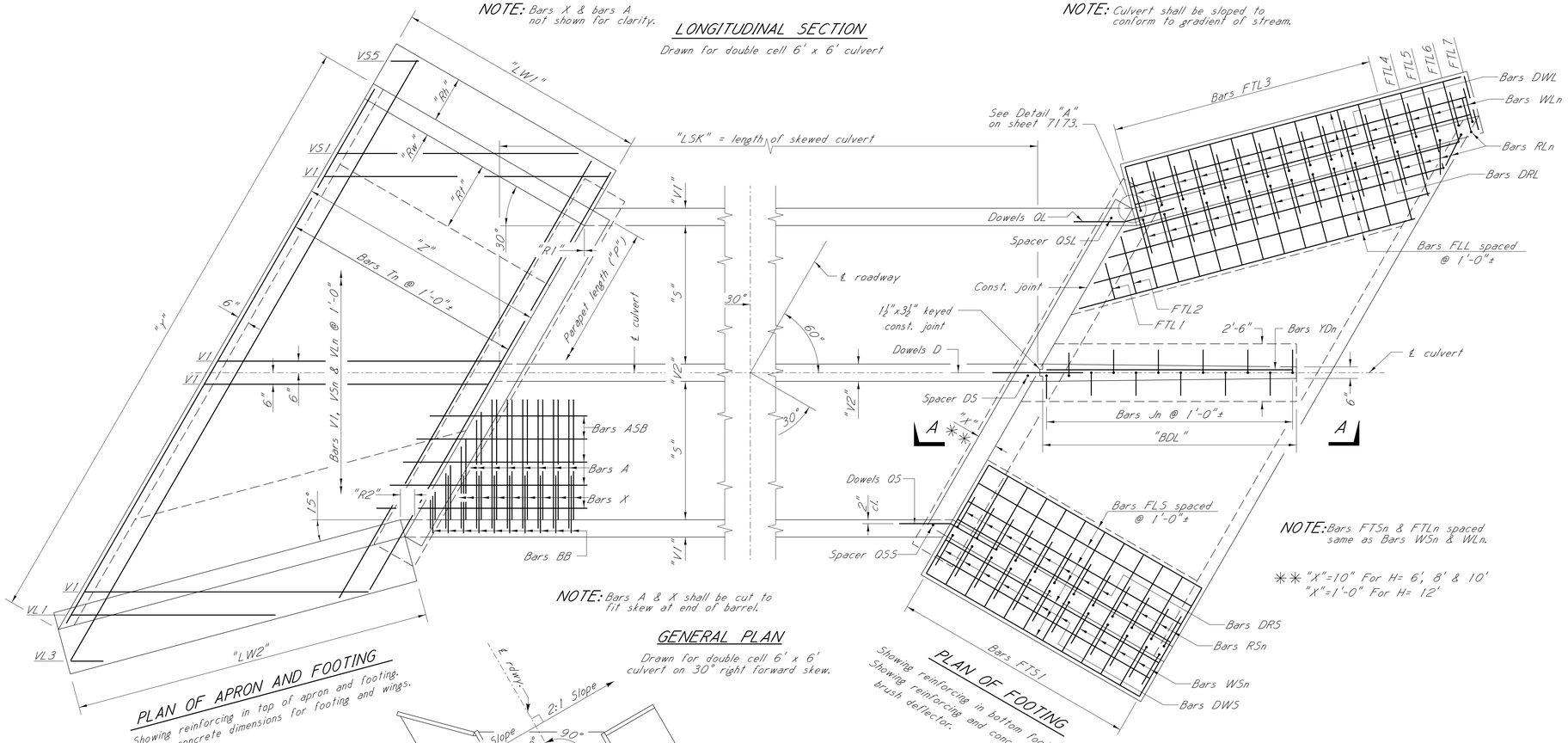


## PLAN OF APRON AND FOOTING

Showing reinforcing in top of apron and footing. Showing concrete dimensions for footing and wings.

NOTE: Bars A & X shall be cut to fit skew at end of barrel.

## GENERAL PLAN

Drawn for double cell 6' x 6' culvert on 30° right forward skew.

## PLAN OF FOOTING

Showing reinforcing in bottom footing & wingwall. Showing reinforcing and concrete dimensions in brush deflector.

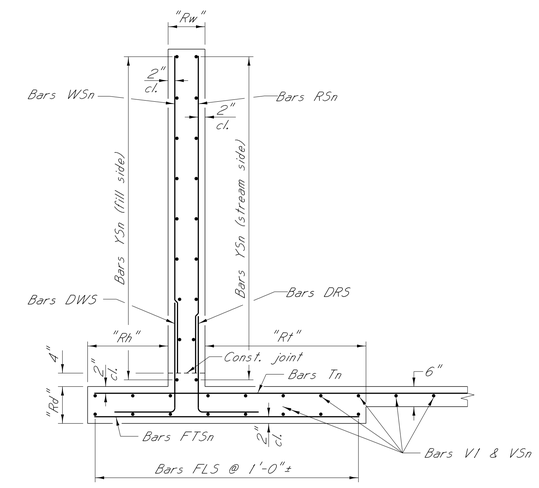


## CROSS SECTION WINGWALL

Showing reinforcing in "LW1" wingwall, footing and apron.

NOTE: For bar bending details and quantities, see drawings IWS-6-2W-30, IWS-8-2W-30, IWS-10-2W-30 & IWS-12-2W-30.

## SPECIAL PROVISIONS REQUIRED:

Concrete bridges and structures . . . . . No. 907-804

## DESIGN DATA:

Specifications. . . . . A.A.S.H.T.O., LRFD 2012.
Loading. . . . . HL-93.
Concrete. . . . . .Class "B" (3,500 p.s.i.)

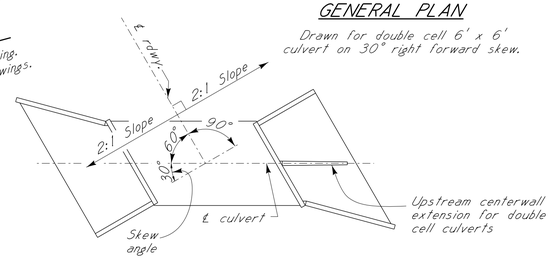


## PLAN OF 30° LEFT FORWARD SKEW

MISSISSIPPI DEPARTMENT OF TRANSPORTATION

# WINGS WITH 2:1 SLOPE FOR BASIC CULVERT DRAWING DOUBLE CELL 30° SKEW DETAILS

HEIGHTS 6-12 FT.

SPANS 12-40 FT.

SHT. 1 OF 2

WORKING NUMBER IWS-2W-30

SHEET NUMBER 7172

DEPARTMENT OF TRANSPORTATION MDOT MISSISSIPPI

| DATE | REVISIONS | BY |
|---|---|---|
| | | |

DESIGNER William K. McBeath, P.E. CHECKER B. Keith Carr P.E.
DETAILER Wesley Phillips, E.I. ISSUE DATE 01/01/2015
DIRECTOR OF STRUCTURES, STATE BRIDGE ENGINEER - JUSTIN WALKER PE.
DEP. DIR. OF STRUCTURES, ASST. STATE BRIDGE ENGINEER - SCOTT WESTERFIELD PE.

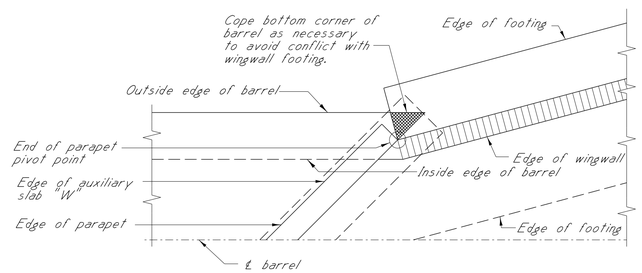


DETAIL "A"

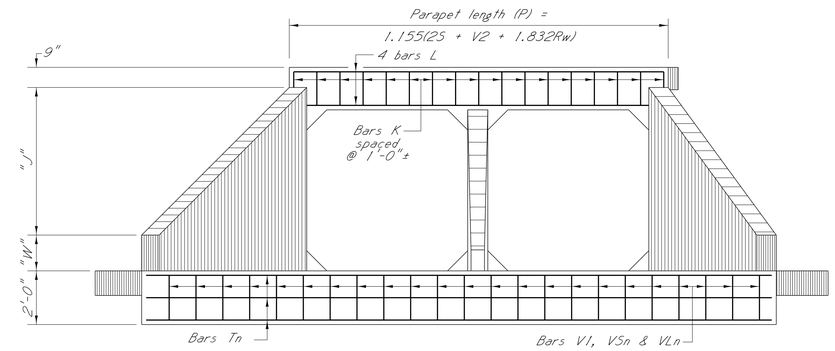


END ELEVATION

Showing reinforcing in pararpet & toe wall

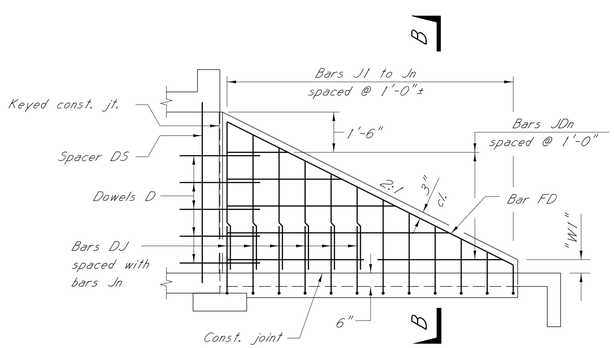


SECTION A-A

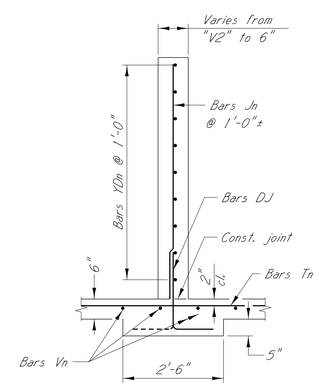


SECTION B-B

SPECIAL PROVISIONS REQUIRED:
Concrete bridges and structures . . . . . No. 907-804

DESIGN DATA:
Specifications. . . . . A.A.S.H.T.O., LRFD 2012.
Loading. . . . . HL-93.
Concrete. . . . . .Class "B" (3,500 p.s.i.)

| | | |
|---|---|---|
| DATE | REVISIONS | BY |

MISSISSIPPI DEPARTMENT OF TRANSPORTATION

WINGS WITH 2:1 SLOPE FOR
BASIC CULVERT DRAWING
DOUBLE CELL
30° SKEW DETAILS

HEIGHTS 6-12 FT.

SPANS 12-32 FT.

SHT. 2 OF 2

WORKING NUMBER
IWS-2W-30

SHEET NUMBER
7173

DEPARTMENT OF TRANSPORTATION MDOT MISSISSIPPI

DESIGNER William K. McBeath, P.E. CHECKER B. Keith Carr P.E.
DETAILER Wesley Phillips, E.I. ISSUE DATE 01/01/2015
DIRECTOR OF STRUCTURES, STATE BRIDGE ENGINEER - JUSTIN WALKER PE.
DEP. DIR. OF STRUCTURES, ASST. STATE BRIDGE ENGINEER - SCOTT WESTERFIELD PE.

| HEADWALL DIMENSIONS | | | | | | | | | | | | | | | | | | |
|---|---|---|---|---|---|---|---|---|---|---|---|---|---|---|---|---|---|---|
| CULVERT HEIGHT "H" | "J" | "LW1" | "LW2" | "R1" | "R2" | "Z" | "Rd" | "Rw" | "Rt" | "Rh" | "W1" | "BDL" | "Y" CLEAR SPAN | | | | |
| | | | | | | | | | | | | | 8' | 10' | 12' | 14' | 16' |
| 8'-0" | 7'-1" | 14'-2" | 20'-0 7/16" | 0'-0" | 0'-7 3/8" | 14'-2" | 0'-11" | 0'-9" | 3'-0" | 2'-0" | 0'-7" | 14'-10 1/8" | 34'-2 3/4"+1.155V2 | 38'-10 3/16"+1.155V2 | 43'-5 9/16"+1.155V2 | 48'-1"+1.155V2 | 52'-8 7/16"+1.155V2 |

NOTE: Total headwall quantities include wingwalls, apron, wingwall footings and parapet.
Total brush deflector quantities include brushwall and brushwall footing.

| AREA OF OPENING sq. ft. | SIZE OF CULVERT ft. x ft. "S"x"H" | | | | | | | ESTIMATED QUANTITIES | | | | | | | |
|---|---|---|---|---|---|---|---|---|---|---|---|---|---|---|---|
| | | | | | | | | TOTAL HEADWALL | | BRUSH DEFLECTOR | | 1 AUX. SLAB "W" | | 1 SQUARE COLLAR | |
| | | Cover | T1 | T2 | V1 | V2 | W | CONC. cu. yd. | REINF. STEEL lbs. | CONC. cu. yd. | REINF. STEEL lbs. | CONC. cu. yd. | REINF. STEEL lbs. | CONC. cu. yd. | REINF. STEEL lbs. |
| 128 | 8x8 | 5'-0" | 9" | 9" | 9" | 9" | 1'-9" | 18.2428 | 2393.107 | 2.0591 | 277.054 | 1.1306 | 67.524 | 4.4074 | 1058.215 |
| | | 10'-0" | 9" | 10 1/2" | 9" | 9" | 1'-9" | 18.3508 | 2393.107 | 2.0591 | 277.054 | 1.1306 | 67.524 | 4.4259 | 1061.898 |
| | | 15'-0" | 11" | 1'-0 1/2" | 9" | 9" | 1'-11" | 18.6546 | 2409.712 | 2.0591 | 277.166 | 1.1306 | 67.524 | 4.4753 | 1071.719 |
| | | 20'-0" | 1'-0" | 1'-1 1/2" | 9" | 9" | 2'-0" | 18.8065 | 2418.013 | 2.0591 | 277.221 | 1.1306 | 67.524 | 4.5000 | 1076.629 |
| | | 25'-0" | 1'-2" | 1'-3 1/2" | 9 1/2" | 9" | 2'-2" | 19.1123 | 2434.619 | 2.0591 | 277.333 | 1.1354 | 67.691 | 4.5617 | 1088.122 |
| | | 30'-0" | 1'-3 1/2" | 1'-5" | 10 1/2" | 9" | 2'-3 1/2" | 19.3461 | 2447.072 | 2.0591 | 277.416 | 1.1449 | 67.913 | 4.6235 | 1098.834 |
| 160 | 10x8 | 5'-0" | 9" | 10 1/2" | 9" | 9" | 1'-9" | 19.8738 | 2518.301 | 2.0591 | 277.054 | 1.3587 | 81.496 | 5.0185 | 1209.906 |
| | | 10'-0" | 10 1/2" | 1'-0 1/2" | 9" | 9" | 1'-10 1/2" | 20.1662 | 2531.590 | 2.0591 | 277.138 | 1.3587 | 81.496 | 5.0617 | 1219.716 |
| | | 15'-0" | 1'-1" | 1'-3" | 9" | 9" | 2'-1" | 20.5814 | 2553.735 | 2.0591 | 277.277 | 1.3587 | 81.496 | 5.1235 | 1233.730 |
| | | 20'-0" | 1'-4" | 1'-5 1/2" | 9" | 9" | 2'-4" | 21.0367 | 2580.311 | 2.0591 | 277.444 | 1.3587 | 81.496 | 5.1914 | 1249.146 |
| | | 25'-0" | 1'-0" | 1'-0 1/2" | 9 1/2" | 9" | 2'-0" | 20.2866 | 2544.878 | 2.0591 | 277.221 | 1.3634 | 81.663 | 5.0926 | 1225.593 |
| | | 30'-0" | 1'-1 1/2" | 1'-2" | 11" | 9" | 2'-1 1/2" | 20.5406 | 2558.166 | 2.0591 | 277.305 | 1.3777 | 82.053 | 5.1667 | 1239.020 |
| 192 | 12x8 | 5'-0" | 10 1/2" | 11 1/2" | 9" | 9" | 1'-10 1/2" | 21.6170 | 2654.891 | 2.0591 | 277.138 | 1.5868 | 95.468 | 5.6420 | 1365.790 |
| | | 10'-0" | 1'-0" | 1'-1" | 9" | 9" | 2'-0" | 21.8876 | 2668.847 | 2.0591 | 277.221 | 1.5868 | 95.468 | 5.6790 | 1375.242 |
| | | 15'-0" | 1'-3" | 1'-5 1/2" | 9" | 9" | 2'-3" | 22.5796 | 2696.760 | 2.0591 | 277.388 | 1.5868 | 95.468 | 5.7716 | 1398.871 |
| | | 20'-0" | 1'-1" | 1'-1" | 9 1/2" | 9 1/2" | 2'-1" | 21.9846 | 2678.762 | 2.1125 | 277.277 | 1.5939 | 95.691 | 5.7099 | 1380.511 |
| | | 25'-0" | 1'-2" | 1'-2 1/2" | 9 1/2" | 9" | 2'-2" | 22.1997 | 2687.457 | 2.0591 | 277.333 | 1.5915 | 95.580 | 5.7346 | 1387.941 |
| | | 30'-0" | 1'-3" | 1'-4" | 11 1/2" | 9" | 2'-3" | 22.4401 | 2696.760 | 2.0591 | 277.388 | 1.6105 | 96.136 | 5.8148 | 1402.509 |
| 224 | 14x8 | 5'-0" | 1'-0" | 1'-0 1/2" | 9" | 9" | 2'-0" | 23.3889 | 2795.795 | 2.0591 | 277.221 | 1.8149 | 107.882 | 6.2654 | 1523.413 |
| | | 10'-0" | 1'-1 1/2" | 1'-3" | 9" | 9" | 2'-1 1/2" | 23.7956 | 2810.586 | 2.0591 | 277.305 | 1.8149 | 107.882 | 6.3148 | 1537.406 |
| | | 15'-0" | 1'-1" | 1'-1" | 9" | 9" | 2'-1" | 23.5260 | 2805.654 | 2.0591 | 277.277 | 1.8149 | 107.882 | 6.2840 | 1528.660 |
| | | 20'-0" | 1'-3" | 1'-3" | 11" | 9" | 2'-3" | 23.9226 | 2825.377 | 2.0591 | 277.388 | 1.8339 | 108.383 | 6.3827 | 1549.345 |
| | | 25'-0" | 1'-4" | 1'-5" | 11 1/2" | 9" | 2'-4" | 24.2385 | 2835.237 | 2.0591 | 277.444 | 1.8386 | 108.550 | 6.4321 | 1561.512 |
| | | 30'-0" | 1'-5" | 1'-6 1/2" | 1'-0" | 9" | 2'-5" | 24.4976 | 2845.101 | 2.0591 | 277.500 | 1.8434 | 108.661 | 6.4753 | 1571.930 |
| 256 | 16x8 | 5'-0" | 1'-1" | 1'-1 1/2" | 9 1/2" | 9" | 2'-1" | 25.1503 | 2930.041 | 2.0591 | 277.277 | 2.0477 | 123.524 | 6.8951 | 1682.524 |
| | | 10'-0" | 1'-3 1/2" | 1'-5" | 10" | 9" | 2'-3 1/2" | 25.8060 | 2955.810 | 2.0591 | 277.416 | 2.0525 | 123.636 | 6.9815 | 1707.272 |
| | | 15'-0" | 1'-2 1/2" | 1'-2 1/2" | 11" | 9" | 2'-2 1/2" | 25.4043 | 2945.500 | 2.0591 | 277.361 | 2.0620 | 123.914 | 6.9630 | 1697.157 |
| | | 20'-0" | 1'-5" | 1'-5" | 1'-0" | 9" | 2'-5" | 25.9369 | 2971.269 | 2.0591 | 277.500 | 2.0715 | 124.192 | 7.0494 | 1719.732 |
| | | 25'-0" | 1'-7" | 1'-7" | 1'-1" | 9" | 2'-7" | 26.3678 | 2991.878 | 2.0591 | 277.611 | 2.0810 | 124.415 | 7.1235 | 1738.461 |
| | | 30'-0" | 1'-8" | 1'-9" | 1'-2" | 10" | 2'-8" | 26.7582 | 3003.468 | 2.1661 | 277.449 | 2.0952 | 124.805 | 7.1975 | 1754.235 |

## GENERAL NOTES:

Specifications: Mississippi Standard Specifications For Road And Bridge Construction, 2004.
All concrete shall be Class "B".
Concrete surfaces shall be finished in accordance with Sub-Section 804.03.19.6.2
Expansion joint material shall be bituminous fiber type unless otherwise noted.
All exposed corners shall be chamfered 3/4".
Reinforcing steel shall be placed 2" clear minimum from the surface of the concrete unless otherwise noted, and all reinforcing shall be adequately supported from the forms.
All bars shall be accurately spaced and securely wired at each intersection before placing concrete.
Bar bending details shall be in accordance with "Manual of Standard Practice for Detailing Reinforced Concrete Structures" (ACI 315R-94).
Reinforcement order lists and required placing plans shall be furnished in accordance with Section 805 of the Mississippi Standard Specifications. Partial submittals are not acceptable.
Reinforcing steel shall be ASTM A615, Grade 60, unless otherwise noted.
Horizontal construction joints shall be placed only at the locations shown, and the concrete shall be allowed to set a minimum period of two hours before continuing the pour.
Auxiliary slabs "W" and vertical construction joints at the wings shall be placed in all culverts regardless of length.
The quantities shown will be used as a basis for final payment unless this drawing is modified.

DEPARTMENT OF TRANSPORTATION MDOT MISSISSIPPI

| DATE | REVISIONS | BY |
|---|---|---|

MISSISSIPPI DEPARTMENT OF TRANSPORTATION

WINGS WITH 2:1 SLOPE FOR BASIC CULVERT DRAWING DOUBLE CELL 30° SKEW DETAILS

HEIGHT 8 FT.

SPANS 16-32 FT.

SHT. 1 OF 3

WORKING NUMBER IWD-8-2W-30

SHEET NUMBER 7176

DESIGNER William K. McBeath, P.E. CHECKER B. Keith Carr P.E.
DETAILER Wesley Phillips, E.I. ISSUE DATE 01/01/2015
DIRECTOR OF STRUCTURES, STATE BRIDGE ENGINEER - JUSTIN WALKER PE.
DEP. DIR. OF STRUCTURES, ASST. STATE BRIDGE ENGINEER - SCOTT WESTERFIELD PE.

HEIGHT = 8 FT.

BAR LISTS FOR WINGS, FOOTING, PARAPET, APRON & AUXILIARY SLAB

| BAR | SIZE | NO. REQUIRED SPAN 8' | 10' | 12' | 14' | 16' | | | DIM. X | DIM. Y | LENGTH |
|---|---|---|---|---|---|---|---|---|---|---|---|
| T1 | #4 | 1 | 1 | 1 | 1 | 1 | | | | | 1.155(2S+V2)+6'-2" |
| T2 | #4 | 1 | 1 | 1 | 1 | 1 | | | | | 1.155(2S+V2)+7'-2" |
| T3 | #4 | 1 | 1 | 1 | 1 | 1 | | | | | 1.155(2S+V2)+8'-2" |
| T4 | #4 | 1 | 1 | 1 | 1 | 1 | | | | | 1.155(2S+V2)+9'-2" |
| T5 | #4 | 1 | 1 | 1 | 1 | 1 | | | | | 1.155(2S+V2)+10'-1 ½" |
| T6 | #4 | 1 | 1 | 1 | 1 | 1 | | | | | 1.155(2S+V2)+11'-1 ½" |
| T7 | #4 | 1 | 1 | 1 | 1 | 1 | | | | | 1.155(2S+V2)+12'-1 ½" |
| T8 | #4 | 1 | 1 | 1 | 1 | 1 | | | | | 1.155(2S+V2)+13'-1" |
| T9 | #4 | 1 | 1 | 1 | 1 | 1 | | | | | 1.155(2S+V2)+14'-1" |
| T10 | #4 | 1 | 1 | 1 | 1 | 1 | | | | | 1.155(2S+V2)+15'-1" |
| T11 | #4 | 1 | 1 | 1 | 1 | 1 | | | | | 1.155(2S+V2)+16'-1" |
| T12 | #4 | 1 | 1 | 1 | 1 | 1 | | | | | 1.155(2S+V2)+17'-0 ½" |
| T13 | #4 | 1 | 1 | 1 | 1 | 1 | | | | | 1.155(2S+V2)+18'-0 ½" |
| T14 | #4 | 1 | 1 | 1 | 1 | 1 | | | | | 1.155(2S+V2)+18'-6" |
| T15 | #4 | 3 | 3 | 3 | 3 | 3 | | | | | 5+15'-2 ½" |
| V1 | #4 | 23 | 27 | 31 | 35 | 39 | | | 15'-11 ½" | 1'-8" | 17'-7 ½" |
| VL1 | #4 | 1 | 1 | 1 | 1 | 1 | | | 12'-6 ½" | 1'-8" | 14'-2 ½" |
| VL2 | #4 | 1 | 1 | 1 | 1 | 1 | | | 9'-4 ½" | 1'-8" | 11'-0 ½" |
| VL3 | #4 | 1 | 1 | 1 | 1 | 1 | | | 6'-0 ½" | | 6'-0 ½" |
| VL4 | #4 | 1 | 1 | 1 | 1 | 1 | | | 2'-0 ½" | | 2'-0 ½" |
| VS1 | #4 | 1 | 1 | 1 | 1 | 1 | | | 14'-1 ½" | 1'-8" | 15'-9 ½" |
| VS2 | #4 | 1 | 1 | 1 | 1 | 1 | | | 11'-9 ½" | 1'-8" | 13'-5 ½" |
| VS3 | #4 | 1 | 1 | 1 | 1 | 1 | | | 9'-6" | 1'-8" | 11'-2" |
| VS4 | #4 | 1 | 1 | 1 | 1 | 1 | | | 7'-2" | 1'-8" | 8'-10" |
| VS5 | #4 | 1 | 1 | 1 | 1 | 1 | | | 4'-10 ½" | 1'-8" | 6'-6 ½" |
| VS6 | #4 | 1 | 1 | 1 | 1 | 1 | | | 2'-7" | | 2'-7" |
| FTL1 | #5 | 1 | 1 | 1 | 1 | 1 | | | | | 1'-0 ½" |
| FTL2 | #5 | 1 | 1 | 1 | 1 | 1 | | | | | 1'-10 ½" |
| FTL3 | #5 | 1 | 1 | 1 | 1 | 1 | | | | | 2'-8 ½" |
| FTL4 | #5 | 20 | 20 | 20 | 20 | 20 | | | | | 5'-5" |
| FTL5 | #5 | 1 | 1 | 1 | 1 | 1 | | | | | 5'-0 ½" |
| FTL6 | #5 | 1 | 1 | 1 | 1 | 1 | | | | | 4'-2 ½" |
| FTL7 | #5 | 1 | 1 | 1 | 1 | 1 | | | | | 3'-5" |
| FTL8 | #5 | 1 | 1 | 1 | 1 | 1 | | | | | 2'-7" |
| FTL9 | #5 | 1 | 1 | 1 | 1 | 1 | | | | | 2'-5" |
| FLL | #4 | 7 | 7 | 7 | 7 | 7 | | | | | 19'-7" |
| FTS | #5 | 18 | 18 | 18 | 18 | 18 | | | | | 5'-5" |
| FLS | #4 | 7 | 7 | 7 | 7 | 7 | | | | | 13'-10" |
| WS1 | #5 | 1 | 1 | 1 | 1 | 1 | | | | W+6'-4 ½" | W+6'-4 ½" |
| WS2 | #5 | 1 | 1 | 1 | 1 | 1 | | | | W+6'-0" | W+6'-0" |
| WS3 | #5 | 1 | 1 | 1 | 1 | 1 | | | | W+5'-7" | W+5'-7" |
| WS4 | #5 | 1 | 1 | 1 | 1 | 1 | | | | W+5'-2" | W+5'-2" |
| WS5 | #5 | 1 | 1 | 1 | 1 | 1 | | | | W+4'-9" | W+4'-9" |
| WS6 | #5 | 1 | 1 | 1 | 1 | 1 | | | | W+4'-4" | W+4'-4" |
| WS7 | #5 | 1 | 1 | 1 | 1 | 1 | | | | W+3'-11 ½" | W+3'-11 ½" |
| WS8 | #5 | 1 | 1 | 1 | 1 | 1 | | | | W+3'-6 ½" | W+3'-6 ½" |
| WS9 | #5 | 1 | 1 | 1 | 1 | 1 | | | | W+3'-1 ½" | W+3'-1 ½" |
| WS10 | #5 | 1 | 1 | 1 | 1 | 1 | | | | W+2'-8 ½" | W+2'-8 ½" |
| WS11 | #5 | 1 | 1 | 1 | 1 | 1 | | | | W+2'-4" | W+2'-4" |
| WS12 | #5 | 1 | 1 | 1 | 1 | 1 | | | | W+1'-11" | W+1'-11" |
| WS13 | #5 | 1 | 1 | 1 | 1 | 1 | | | | W+1'-6" | W+1'-6" |
| WS14 | #5 | 1 | 1 | 1 | 1 | 1 | | | | W+1'-1" | W+1'-1" |
| WS15 | #5 | 1 | 1 | 1 | 1 | 1 | | | 1'-6" | W+1'-8" | W+3'-2" |
| WS16 | #5 | 1 | 1 | 1 | 1 | 1 | | | 1'-6" | W+1'-3 ½" | W+2'-9 ½" |
| WS17 | #5 | 1 | 1 | 1 | 1 | 1 | | | 1'-6" | W+0'-10 ½" | W+2'-4 ½" |
| WS18 | #5 | 1 | 1 | 1 | 1 | 1 | | | 1'-6" | W+0'-5 ½" | W+1'-11 ½" |
| DWS | #5 | 14 | 14 | 14 | 14 | 14 | | | 1'-6" | 2'-9" | 4'-3" |
| WL1 | #5 | 1 | 1 | 1 | 1 | 1 | | | | W+6'-5" | W+6'-5" |
| WL2 | #5 | 1 | 1 | 1 | 1 | 1 | | | | W+6'-1 ½" | W+6'-1 ½" |
| WL3 | #5 | 1 | 1 | 1 | 1 | 1 | | | | W+5'-10" | W+5'-10" |
| WL4 | #5 | 1 | 1 | 1 | 1 | 1 | | | | W+5'-6 ½" | W+5'-6 ½" |
| WL5 | #5 | 1 | 1 | 1 | 1 | 1 | | | | W+5'-3" | W+5'-3" |
| WL6 | #5 | 1 | 1 | 1 | 1 | 1 | | | | W+4'-11 ½" | W+4'-11 ½" |
| WL7 | #5 | 1 | 1 | 1 | 1 | 1 | | | | W+4'-8" | W+4'-8" |

HEIGHT = 8 FT.

BAR LISTS FOR WINGS, FOOTING, PARAPET, APRON & AUXILIARY SLAB

| BAR | SIZE | NO. REQUIRED SPAN 8' | 10' | 12' | 14' | 16' | | | DIM. X | DIM. Y | LENGTH |
|---|---|---|---|---|---|---|---|---|---|---|---|
| WL8 | #5 | 1 | 1 | 1 | 1 | 1 | | | | W+4'-4 ½" | W+4'-4 ½" |
| WL9 | #5 | 1 | 1 | 1 | 1 | 1 | | | | W+4'-1" | W+4'-1" |
| WL10 | #5 | 1 | 1 | 1 | 1 | 1 | | | | W+3'-10" | W+3'-10" |
| WL11 | #5 | 1 | 1 | 1 | 1 | 1 | | | | W+3'-6 ½" | W+3'-6 ½" |
| WL12 | #5 | 1 | 1 | 1 | 1 | 1 | | | | W+3'-3" | W+3'-3" |
| WL13 | #5 | 1 | 1 | 1 | 1 | 1 | | | | W+2'-11 ½" | W+2'-11 ½" |
| WL14 | #5 | 1 | 1 | 1 | 1 | 1 | | | | W+2'-8" | W+2'-8" |
| WL15 | #5 | 1 | 1 | 1 | 1 | 1 | | | | W+2'-4 ½" | W+2'-4 ½" |
| WL16 | #5 | 1 | 1 | 1 | 1 | 1 | | | | W+2'-1" | W+2'-1" |
| WL17 | #5 | 1 | 1 | 1 | 1 | 1 | | | | W+1'-9 ½" | W+1'-9 ½" |
| WL18 | #5 | 1 | 1 | 1 | 1 | 1 | | | | W+1'-6" | W+1'-6" |
| WL19 | #5 | 1 | 1 | 1 | 1 | 1 | | | | W+1'-2 ½" | W+1'-2 ½" |
| WL20 | #5 | 1 | 1 | 1 | 1 | 1 | | | 1'-6" | W+1'-11" | W+3'-5" |
| WL21 | #5 | 1 | 1 | 1 | 1 | 1 | | | 1'-6" | W+1'-7 ½" | W+3'-1 ½" |
| WL22 | #5 | 1 | 1 | 1 | 1 | 1 | | | 1'-6" | W+1'-4" | W+2'-10" |
| WL23 | #5 | 1 | 1 | 1 | 1 | 1 | | | 1'-6" | W+1'-0 ½" | W+2'-6 ½" |
| WL24 | #5 | 1 | 1 | 1 | 1 | 1 | | | 1'-6" | W+0'-9" | W+2'-3" |
| WL25 | #5 | 1 | 1 | 1 | 1 | 1 | | | 1'-6" | W+0'-5 ½" | W+1'-11 ½" |
| DWL | #5 | 19 | 19 | 19 | 19 | 19 | | | 1'-6" | 2'-9" | 4'-3" |
| RS1 | #4 | 1 | 1 | 1 | 1 | 1 | | | | W+6'-4 ½" | W+6'-4 ½" |
| RS2 | #4 | 1 | 1 | 1 | 1 | 1 | | | | W+5'-10 ½" | W+5'-10 ½" |
| RS3 | #4 | 1 | 1 | 1 | 1 | 1 | | | | W+5'-5" | W+5'-5" |
| RS4 | #4 | 1 | 1 | 1 | 1 | 1 | | | | W+4'-11" | W+4'-11" |
| RS5 | #4 | 1 | 1 | 1 | 1 | 1 | | | | W+4'-5" | W+4'-5" |
| RS6 | #4 | 1 | 1 | 1 | 1 | 1 | | | | W+3'-11" | W+3'-11" |
| RS7 | #4 | 1 | 1 | 1 | 1 | 1 | | | | W+3'-5" | W+3'-5" |
| RS8 | #4 | 1 | 1 | 1 | 1 | 1 | | | | W+2'-11" | W+2'-11" |
| RS9 | #4 | 1 | 1 | 1 | 1 | 1 | | | | W+2'-5" | W+2'-5" |
| RS10 | #4 | 1 | 1 | 1 | 1 | 1 | | | | W+1'-11 ½" | W+1'-11 ½" |
| RS11 | #4 | 1 | 1 | 1 | 1 | 1 | | | | W+1'-5 ½" | W+1'-5 ½" |
| RS12 | #4 | 1 | 1 | 1 | 1 | 1 | | | | W+0'-11 ½" | W+0'-11 ½" |
| RS13 | #4 | 1 | 1 | 1 | 1 | 1 | | | 1'-6" | W+1'-5 ½" | W+2'-11 ½" |
| RS14 | #4 | 1 | 1 | 1 | 1 | 1 | | | 1'-6" | W+0'-11 ½" | W+2'-5 ½" |
| RS15 | #4 | 1 | 1 | 1 | 1 | 1 | | | 1'-6" | W+0'-5 ½" | W+1'-11 ½" |
| DRS | #4 | 12 | 12 | 12 | 12 | 12 | | | 1'-6" | 2'-5" | 3'-11" |
| RL1 | #4 | 1 | 1 | 1 | 1 | 1 | | | | W+6'-5" | W+6'-5" |
| RL2 | #4 | 1 | 1 | 1 | 1 | 1 | | | | W+6'-1" | W+6'-1" |
| RL3 | #4 | 1 | 1 | 1 | 1 | 1 | | | | W+5'-9" | W+5'-9" |
| RL4 | #4 | 1 | 1 | 1 | 1 | 1 | | | | W+5'-4 ½" | W+5'-4 ½" |
| RL5 | #4 | 1 | 1 | 1 | 1 | 1 | | | | W+5'-0 ½" | W+5'-0 ½" |
| RL6 | #4 | 1 | 1 | 1 | 1 | 1 | | | | W+4'-8" | W+4'-8" |
| RL7 | #4 | 1 | 1 | 1 | 1 | 1 | | | | W+4'-4" | W+4'-4" |
| RL8 | #4 | 1 | 1 | 1 | 1 | 1 | | | | W+4'-0" | W+4'-0" |
| RL9 | #4 | 1 | 1 | 1 | 1 | 1 | | | | W+3'-7 ½" | W+3'-7 ½" |
| RL10 | #4 | 1 | 1 | 1 | 1 | 1 | | | | W+3'-3 ½" | W+3'-3 ½" |
| RL11 | #4 | 1 | 1 | 1 | 1 | 1 | | | | W+2'-11 ½" | W+2'-11 ½" |
| RL12 | #4 | 1 | 1 | 1 | 1 | 1 | | | | W+2'-7" | W+2'-7" |
| RL13 | #4 | 1 | 1 | 1 | 1 | 1 | | | | W+2'-3" | W+2'-3" |
| RL14 | #4 | 1 | 1 | 1 | 1 | 1 | | | | W+1'-11" | W+1'-11" |
| RL15 | #4 | 1 | 1 | 1 | 1 | 1 | | | | W+1'-6 ½" | W+1'-6 ½" |
| RL16 | #4 | 1 | 1 | 1 | 1 | 1 | | | | W+1'-2 ½" | W+1'-2 ½" |
| RL17 | #4 | 1 | 1 | 1 | 1 | 1 | | | | W+0'-10" | W+0'-10" |
| RL18 | #4 | 1 | 1 | 1 | 1 | 1 | | | 1'-6" | W+1'-6" | W+3'-0" |
| RL19 | #4 | 1 | 1 | 1 | 1 | 1 | | | 1'-6" | W+1'-2" | W+2'-8" |
| RL20 | #4 | 1 | 1 | 1 | 1 | 1 | | | 1'-6" | W+0'-9 ½" | W+2'-3 ½" |
| RL21 | #4 | 1 | 1 | 1 | 1 | 1 | | | 1'-6" | W+0'-5 ½" | W+1'-11 ½" |
| DRL | #4 | 17 | 17 | 17 | 17 | 17 | | | 1'-6" | 2'-5" | 3'-11" |
| YS1 | #4 | 2 | 2 | 2 | 2 | 2 | | | | | 2'-9 ½" |
| YS2 | #4 | 2 | 2 | 2 | 2 | 2 | | | | | 4'-9 ½" |
| YS3 | #4 | 2 | 2 | 2 | 2 | 2 | | | | | 6'-9 ½" |
| YS4 | #4 | 2 | 2 | 2 | 2 | 2 | | | | | 8'-9 ½" |
| YS5 | #4 | 2 | 2 | 2 | 2 | 2 | | | | | 10'-9 ½" |
| YS6 | #4 | 2 | 2 | 2 | 2 | 2 | | | | | 12'-9 ½" |
| YS7 | #4 | 6 | 6 | 6 | 6 | 6 | | | | | 13'-10" |

HEIGHT = 8 FT.

BAR LISTS FOR WINGS, FOOTING, PARAPET, APRON & AUXILIARY SLAB

| BAR | SIZE | NO. REQUIRED SPAN 8' | 10' | 12' | 14' | 16' | | | DIM. X | DIM. Y | LENGTH |
|---|---|---|---|---|---|---|---|---|---|---|---|
| YL1 | #4 | 2 | 2 | 2 | 2 | 2 | | | | | 4'-0 ½" |
| YL2 | #4 | 2 | 2 | 2 | 2 | 2 | | | | | 6'-10 ½" |
| YL3 | #4 | 2 | 2 | 2 | 2 | 2 | | | | | 9'-8 ½" |
| YL4 | #4 | 2 | 2 | 2 | 2 | 2 | | | | | 12'-6" |
| YL5 | #4 | 2 | 2 | 2 | 2 | 2 | | | | | 15'-4" |
| YL6 | #4 | 2 | 2 | 2 | 2 | 2 | | | | | 18'-2" |
| YL7 | #4 | 6 | 6 | 6 | 6 | 6 | | | | | 19'-8 ½" |
| FS | #4 | 2 | 2 | 2 | 2 | 2 | | | | | 15'-5 ½" |
| FL | #4 | 2 | 2 | 2 | 2 | 2 | | | | | 20'-11" |
| N | #4 | 24 | 29 | 34 | 38 | 44 | | | 1'-8" | 0'-4" | 2'-4" |
| M | #4 | 2 | 2 | 2 | 2 | 2 | | | | | 1.155(2S+2V1+V2)+1'-5 ½" |
| K | #4 | 22 | 27 | 31 | 36 | 40 | | | 0'-6" | T1+6" | 2T1+2'-6" |
| L | #4 | 4 | 4 | 4 | 4 | 4 | | | | | 1.155(2S+V2)+1'-3" |
| OS | #7 | 10 | 10 | 10 | 10 | 10 | | | 3'-1 ½" | 3'-1 ½" | 6'-3" |
| OL | #7 | 10 | 10 | 10 | 10 | 10 | | | 3'-1 ½" | 3'-1 ½" | 6'-3" |
| OSS | #4 | 1 | 1 | 1 | 1 | 1 | | | | | 8'-0"+T1 |
| OSL | #4 | 1 | 1 | 1 | 1 | 1 | | | | | 8'-0"+T1 |

| DATE | REVISIONS | BY |
|---|---|---|
| | | |

MISSISSIPPI DEPARTMENT OF TRANSPORTATION

WINGS WITH 2:1 SLOPE FOR BASIC CULVERT DRAWING DOUBLE CELL 30° SKEW DETAILS

HEIGHT 8 FT.

SPANS 16-32 FT.

SHT. 2 OF 3

WORKING NUMBER IWD-8-2W-30

SHEET NUMBER 7177

DESIGNER William K. McBeath, P.E.
DETAILER Wesley Phillips, E.I.
CHECKER B. Keith Carr P.E.
ISSUE DATE 01/01/2015

DIRECTOR OF STRUCTURES, STATE BRIDGE ENGINEER - JUSTIN WALKER PE.
DEP. DIR. OF STRUCTURES, ASST. STATE BRIDGE ENGINEER - SCOTT WESTERFIELD PE.

| BAR LISTS FOR UPSTREAM BRUSH DEFLECTOR | | | | | |
|---|---|---|---|---|---|
| BAR | SIZE | NO. REQ'D | DIM. X | DIM. Y | LENGTH |
| D | #7 | 7 | | | 5'-10" |
| DS | #4 | 1 | | | 8'-0"+T1 |
| J1 | #5 | 1 | | W1+7'-0 ½" | W1+7'-0 ½" |
| J2 | #5 | 1 | | W1+6'-7" | W1+6'-7" |
| J3 | #5 | 1 | | W1+6'-1" | W1+6'-1" |
| J4 | #5 | 1 | | W1+5'-7" | W1+5'-7" |
| J5 | #5 | 1 | | W1+5'-1 ½" | W1+5'-1 ½" |
| J6 | #5 | 1 | | W1+4'-7 ½" | W1+4'-7 ½" |
| J7 | #5 | 1 | | W1+4'-2" | W1+4'-2" |
| J8 | #5 | 1 | | W1+3'-8" | W1+3'-8" |
| J9 | #5 | 1 | | W1+3'-2" | W1+3'-2" |
| J10 | #5 | 1 | | W1+2'-8 ½" | W1+2'-8 ½" |
| J11 | #5 | 1 | | W1+2'-2 ½" | W1+2'-2 ½" |
| J12 | #5 | 1 | 1'-0" | W1+2'-6" | W1+3'-6" |
| J13 | #5 | 1 | 1'-0" | W1+2'-0" | W1+3'-0" |
| J14 | #5 | 1 | 1'-0" | W1+1'-6" | W1+2'-6" |
| J15 | #5 | 1 | 1'-0" | W1+1'-0 ½" | W1+2'-0 ½" |
| J16 | #5 | 1 | 1'-0" | W1+0'-6 ½" | W1+1'-6 ½" |
| DJ | #5 | 11 | 1'-0" | 2'-6" | 3'-6" |
| YD1 | #5 | 1 | | | 2'-3 ½" |
| YD2 | #5 | 1 | | | 4'-3 ½" |
| YD3 | #5 | 1 | | | 6'-3 ½" |
| YD4 | #5 | 1 | | | 8'-3 ½" |
| YD5 | #5 | 1 | | | 10'-3 ½" |
| YD6 | #5 | 1 | | | 12'-3 ½" |
| YD7 | #5 | 1 | | | 14'-6" |
| FD | #4 | 1 | | | 16'-2 ½" |

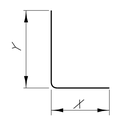


BARS DRS/DRL - #4

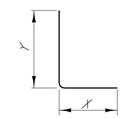


BARS DWS/DWL/DJ - #5

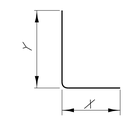


BARS RSn/RLn - #4

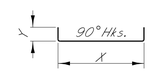


BARS N - #4

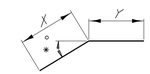


DOWELS OS/OL - #7
* See plan of apron

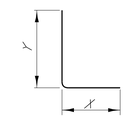


BARS WSn/WLn/Jn - #5

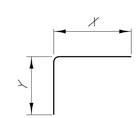


BARS V1/VLn/VSn - #4

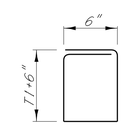


BARS K - #4

BAR BENDING DETAILS

Dimensions are out to out

MISSISSIPPI DEPARTMENT OF TRANSPORTATION

WINGS WITH 2:1 SLOPE FOR
BASIC CULVERT DRAWING
DOUBLE CELL
30° SKEW DETAILS

HEIGHT 8 FT.

SPANS 16-32 FT.

SHT. 3 OF 3

WORKING NUMBER
IWD-8-2W-30

SHEET NUMBER
7178

BY | REVISIONS | DATE

DESIGNER William K. McBeath, P.E. CHECKER B. Keith Carr P.E.
DETAILER Wesley Phillips, E.I. ISSUE DATE 01/01/2015
DIRECTOR OF STRUCTURES, STATE BRIDGE ENGINEER - JUSTIN WALKER PE.
DEP. DIR. OF STRUCTURES, ASST. STATE BRIDGE ENGINEER - SCOTT WESTERFIELD PE.