SECTION 905 -- PROPOSAL (CONTINUED)

I (We) hereby certify by digital signature and electronic submission via Bid Express of the Section 905 proposal below, that all certifications, disclosures and affidavits incorporated herein are deemed to be duly executed in the aggregate, fully enforceable and binding upon delivery of the bid proposal. I (We) further acknowledge that this certification shall not extend to the bid bond or alternate security which must be separately executed for the benefit of the Commission. This signature does not cure deficiencies in any required certifications, disclosures and/or affidavits. I (We) also acknowledge the right of the Commission to require full and final execution on any certification, disclosure or affidavit contained in the proposal at the Commission's election upon award. Failure to so execute at the Commission's request within the time allowed in the Standard Specifications for execution of all contract documents will result in forfeiture of the bid bond or alternate security.

Bidder acknowledges receipt of and has added to and made a part of the proposal and contract documents the following addendum (addenda):

ADDENDUM NO.	1	DATED	2/22/2018	ADDENDUM NO.		DATED	
ADDENDUM NO	2	DATED	3/14/2018	ADDENDUM NO.		DATED	
ADDENDUM NO		DATED		ADDENDUM NO.		DATED	

Number	Description
1	Postponed to March 27, 2018 Letting; Amendment EBS Download Required.
2	Revised Table of Contents; Revised Advertisement; Revise NTB No. 589; Add NTB No. 594; Revised Bid Items; Revised Progress Schedule; Revised or Added Plan Sheet Nos. 2, 4, 7, 23-25, 36, 38, 39, 42-45, 118, 1003, 1009-1013, 2001-2007, 2023, & 8001-8003; Amendment EBS Download Required.

TOTAL ADDENDA: 2
(Must agree with total addenda issued prior to opening of bids)

Respectfully Submitted,

DATE _____

_____
Contractor

BY _____
Signature

TITLE _____

ADDRESS _____

CITY, STATE, ZIP _____

PHONE _____

FAX _____

E-MAIL _____

(To be filled in if a corporation)

Our corporation is chartered under the Laws of the State of _____ and the names, titles and business addresses of the executives are as follows:

_____
President Address

_____
Secretary Address

_____
Treasurer Address

The following is my (our) itemized proposal.

STP-0022-04(063)/ 102607303000

Pontotoc County(ies)

Revised 01/26/2016

For Informational Purposes Only

MISSISSIPPI DEPARTMENT OF TRANSPORTATION
TABLE OF CONTENTS

PROJECT: STP-0022-04(063)/102607303 - Pontotoc

Section 901 - Advertisement

Section 904 - Notice to Bidders

#1	Governing Specification
#2	Status of ROW, w/ Attachments
#3	Final Cleanup
#6	Storm Water Discharge Associated w/ Construction Activities (>5 Acres)
#7	Disadvantaged Business Enterprise In Federal-Aid Highway Construction, w/ Supplement
#8	Errata and Modifications to the 2017 Standard Specifications
#9	Federal Bridge Formula
#10	DUNS Requirement for Federal Funded Projects
#12	MASH Compliant Devices
#13	Safety Edge
#20	Temporary Steel Bracing
#22	Exposure to Severe Sulfate Areas Below Ground Level
#113	Tack Coat
#296	Reduced Speed Limit Signs
#445	Mississippi Agent and Qualified Nonresident Agent
#517	Additional Erosion Control Requirements
#589	Contract Time
#590	Specialty Items
#591	Placement of Fill Material in Federally Regulated Areas
#592	Tangle Foot Trail Requirements
#593	Cooperation Between Contractors
#594	Plan Correction

906 Required Federal Contract Provisions -- FHWA 1273, w/Supplements

Section 907 - Special Provisions

907-102-2	Bidding Requirements and Conditions
907-103-2	Award and Execution of Contract
907-107-1	Contractor's Erosion Control Plan
907-624-1	Inverted Profile Thermoplastic Traffic Stripe
907-663-3	Networking Equipment

906-8 Training Special Provisions

Section 905 - Proposal, Proposal Bid Items, Combination Bid Proposal
Certification of Performance - Prior Federal-Aid Contracts
Certification Regarding Non-Collusion, Debarment and Suspension
SAM.GOV Registration and DUNS Number
Section 902 - Contract Form
Section 903 - Contract Bond Forms

PROJECT: STP-0022-04(063)/102607303 - Pontotoc

Form -- OCR-485

Pile Data Form
Progress Schedule

(REVISIONS TO THE ABOVE WILL BE INDICATED ON THE SECOND SHEET
OF SECTION 905 AS ADDENDA)

03/14/2018 02:05 PM

MISSISSIPPI DEPARTMENT OF TRANSPORTATION

SECTION 901 - ADVERTISEMENT

Electronic bids will be received by the Mississippi Transportation Commission at 10:00 o'clock A.M., Tuesday, March 27, 2018, from the Bid Express Service and shortly thereafter publicly read on the Sixth Floor for:

Reconstruction of SR 15 (Pave, Grade and Bridge Replacements) from SR 76 to the Union County Line, known as Federal Aid Project No. STP-0022-04(063) / 102607303 in Pontotoc County.

The attention of bidders is directed to the Contract Provisions governing selection and employment of labor. Minimum wage rates have been predetermined by the Secretary of Labor and are subject to Public Law 87-581, Work Hours Act of 1962, as set forth in the Contract Provisions.

The Mississippi Department of Transportation hereby notifies all bidders that it will affirmatively insure that in any contract entered into pursuant to this advertisement, disadvantaged business enterprises will be afforded full opportunity to submit bids in response to this invitation and will not be discriminated against on the grounds of race, color, sex, age, disability, religion or national origin in consideration for an award.

The award of this contract will be contingent upon the Contractor satisfying the DBE requirements.

Contractors may request permission to bid online at http://shopmdot.ms.gov at no cost. Upon approval, Contractors shall be eligible to submit a bid using Bid Express at http://bidx.com. Specimen proposals may be viewed and downloaded online at no cost at http://mdot.ms.gov or purchased online at http://shopmdot.ms.gov at a cost of Ten Dollars ($10.00) per proposal plus a small convenience fee. Cash or checks will not be accepted as payment.

Plans must be purchased online at <https://shopmdot.ms.gov>. Costs of plans will be on a per sheet basis plus a small convenience fee. If you have any questions, you can contact the MDOT Plans Print Shop at (601) 359-7460, or e-mail at plans@mdot.state.ms.us. Plans will be shipped upon receipt of payment. Cash or checks will not be accepted as payment.

Bid bond, signed or countersigned by a Mississippi Agent or Qualified Nonresident Agent, with Power of Attorney attached, a Cashier's check or Certified Check for five (5%) percent of bid, payable to STATE OF MISSISSIPPI, must accompany each proposal.

The attention of bidders is directed to the provisions of Subsection 102.07 pertaining to irregular proposals and rejection of bids.

MELINDA L. MCGRATH
EXECUTIVE DIRECTOR

MISSISSIPPI DEPARTMENT OF TRANSPORTATION

SECTION 904 - NOTICE TO BIDDERS NO. 589 **CODE: (SP)**

DATE: **3/14/2018**

SUBJECT: **Contract Time**

PROJECT: **STP-0022-04(063) / 102607303 – Pontotoc County**

The completion of work to be performed by the Contractor for this project will not be a specified date but shall be when all allowable working days are assessed, or any extension thereto as provided in Subsection 108.06. It is anticipated that the Notice of Award will be issued no later than **April 10, 2018** and the date for Notice to Proceed / Beginning of Contract Time will be ***June 11, 2018*** .

Should the Contractor request a Notice to Proceed earlier than ***June 11, 2018*** and it is agreeable with the Department for an early Notice to Proceed, the requested date will become the new Notice to Proceed date.

397 Working Days have been allowed for the completion of work on this project.

MISSISSIPPI DEPARTMENT OF TRANSPORTATION

SECTION 904 - NOTICE TO BIDDERS NO. 594 **CODE: (SP)**

DATE: **03/14/2018**

SUBJECT: **Plan Correction**

PROJECT: **STP-0022-04(063) / 102607303 – Pontotoc County**

The Bidder's attention is called to the Summary of Quantities in the Contract Plans. Pay Item No. 626-A004, 6" Thermoplastic Traffic Stripe, Skip White and Pay Item No. 626-C004, 6" Thermoplastic Edge Stripe, Continuous White have been deleted in the latest Plan Sheets. This is in error. The following items have been included in the bid sheets:

Pay Item No.	Description	Quantity
626-A004	6" Thermoplastic Traffic Stripe, Skip White	12 Mile
626-C004	6" Thermoplastic Edge Stripe, Continuous White	12 Mile

Bidders are further advised that Sheet SQ-6, Sheet Number 25 says "SUMMARY OF QUANTITIES (SHEET 7)" near the top of the page. This should say "SUMMARY OF QUANTITIES (SHEET 6)".

Reconstruction of SR 15 (Pave, Grade and Bridge Replacements) from SR 76 to the Union County Line, known as Federal Aid Project No. STP-0022-04(063) / 102607303 in Pontotoc County.

Line No.	Item Code	Adj Code	Quantity	Units	Description [Fixed Unit Price]
				Roadway Items	
0010	201-A001		1	Lump Sum	Clearing and Grubbing
0020	201-B001		3	Acre	Clearing and Grubbing
0030	202-B004		1,809	Square Yard	Removal of Asphalt Driveways, All Depths
0040	202-B007		29,127	Square Yard	Removal of Asphalt Pavement, All Depths
0050	202-B018		2	Each	Removal of Box Culvert
0060	202-B023		2	Each	Removal of Bridge
0070	202-B036		5	Each	Removal of Bridge Piling
0080	202-B052		19,265	Square Yard	Removal of Concrete Driveways, All Depths
0090	202-B059		879	Square Yard	Removal of Concrete Median & Island Pavement, All Depths
0100	202-B063		1,898	Square Yard	Removal of Concrete Paved Ditch
0110	202-B092		3,366	Linear Feet	Removal of Curb, All Types
0120	202-B136		5,725	Linear Feet	Removal of Guard Rail
0130	202-B165		1	Each	Removal of Inlets, All Sizes
0140	202-B191		4,663	Linear Feet	Removal of Pipe, 8" And Above
0150	202-B241		1	Mile	Removal of Traffic Stripe
0160	203-A001	(E)	69,589	Cubic Yard	Unclassified Excavation, FM, AH
0170	203-EX020	(E)	24,668	Cubic Yard	Borrow Excavation, AH, FME, Class B9
0180	203-G001	(E)	155,309	Cubic Yard	Excess Excavation, FM, AH
0190	206-A001	(S)	3,698	Cubic Yard	Structure Excavation
0200	206-B001	(E)	68	Cubic Yard	Select Material for Undercuts, Contractor Furnished, FM
0210	209-A005		40,423	Square Yard	Geotextile Stabilization, Type V, Non-Woven
0220	211-B001	(E)	18,289	Cubic Yard	Topsoil for Slope Treatment, Contractor Furnished
0230	213-C001		23	Ton	Superphosphate
0240	216-A001		8,660	Square Yard	Solid Sodding
0250	217-A001		2,633	Square Yard	Ditch Liner
0260	219-A001		68	Thousand Gallon	Watering [$20.00]
0270	220-A001		23	Acre	Insect Pest Control [$30.00]
0280	221-A001	(S)	301	Cubic Yard	Concrete Paved Ditch
0290	223-A001		828	Acre	Mowing [$50.00]
0300	225-A001		45	Acre	Grassing
0310	225-B001		23	Ton	Agricultural Limestone
0320	225-C001		91	Ton	Mulch, Vegetative Mulch

Line No.	Item Code	Adj Code	Quantity	Units	Description [Fixed Unit Price]
0330	226-A001		45	Acre	Temporary Grassing
0340	234-A001		3,850	Linear Feet	Temporary Silt Fence
0350	234-C001		300	Linear Feet	Super Silt Fence
0360	234-D001		1	Each	Inlet Siltation Guard
0370	234-F001		250	Linear Feet	Turbidity Barrier
0380	235-A001		820	Each	Temporary Erosion Checks
0390	236-A008		23	Each	Silt Basin, Type D
0400	237-A001		40	Linear Feet	Wattles, 12"
0410	237-A002		5,800	Linear Feet	Wattles, 20"
0420	239-A001		500	Linear Feet	Temporary Slope Drains
0430	245-A001		4,176	Linear Feet	Silt Dike
0440	246-A001		4,200	Linear Feet	Sandbags
0450	247-A001		5	Each	Temporary Stream Diversion
0460	249-A001		200	Ton	Riprap for Erosion Control
0470	249-B001		1,250	Cubic Yard	Remove and Reset Riprap
0480	304-B001	(GT)	86,494	Ton	Granular Material, Class 3, Group C
0490	304-C009	(GY)	34,948	Cubic Yard	Granular Material, AEA, Class 9, Group C
0500	307-B001	(M)	120,843	Square Yard	10" Soil-Lime-Water Mixing, Class B
0510	307-D001		3,171	Ton	Lime
0520	307-S001	(A3)	28,955	Gallon	Bituminous Curing Seal
0530	321-A003		5	Mile	6" In-Grade Preparation
0540	403-A002	(BA1)	4,774	Ton	12.5-mm, MT, Asphalt Pavement
0550	403-A005	(BA1)	51,653	Ton	19-mm, MT, Asphalt Pavement
0560	403-A014	(BA1)	25,183	Ton	9.5-mm, MT, Asphalt Pavement
0570	406-A002		2,310	Square Yard	Cold Milling of Bituminous Pavement, All Depths
0580	407-A001	(A2)	18,769	Gallon	Asphalt for Tack Coat
0590	413-E001		201	Linear Feet	Sawing and Sealing Transverse Joints in Asphalt Pavement
0600	423-A001		20	Mile	Rumble Strips, Ground In
0610	502-A001	(C)	446	Square Yard	Reinforced Cement Concrete Bridge End Pavement
0620	503-C010		1,830	Linear Feet	Saw Cut, Full Depth
0630	601-A001	(S)	244	Cubic Yard	Class "B" Structural Concrete
0640	601-B001	(S)	24	Cubic Yard	Class "B" Structural Concrete, Minor Structures
0650	602-A001	(S)	37,352	Pounds	Reinforcing Steel
0660	603-ALT003	(S)	3,548	Linear Feet	18" Type A Alternate Pipe

Line No.	Item Code	Adj Code	Quantity	Units	Description [Fixed Unit Price]
0670	603-ALT006	(S)	804	Linear Feet	24" Type A Alternate Pipe
0680	603-ALT009	(S)	200	Linear Feet	30" Type A Alternate Pipe
0690	603-ALT011	(S)	264	Linear Feet	36" Type A Alternate Pipe
0700	603-CA011	(S)	204	Linear Feet	18" Reinforced Concrete Pipe, Class III
0710	603-CA026	(S)	1,768	Linear Feet	24" Reinforced Concrete Pipe, Class III
0720	603-CA055	(S)	40	Linear Feet	36" Reinforced Concrete Pipe, Class III
0730	603-CA066	(S)	240	Linear Feet	42" Reinforced Concrete Pipe, Class III
0740	603-CA111	(S)	184	Linear Feet	66" Reinforced Concrete Pipe, Class III
0750	603-CB003	(S)	3	Each	18" Reinforced Concrete End Section
0760	603-CB004	(S)	26	Each	24" Reinforced Concrete End Section
0770	603-CB006	(S)	1	Each	36" Reinforced Concrete End Section
0780	603-CB007	(S)	4	Each	42" Reinforced Concrete End Section
0790	603-CB011	(S)	1	Each	66" Reinforced Concrete End Section
0800	603-CE023	(S)	96	Linear Feet	51" x 31" Concrete Arch Pipe, Class A III
0810	603-CE034	(S)	120	Linear Feet	65" x 40" Concrete Arch Pipe, Class A III
0820	603-CF006	(S)	2	Each	51" x 31" Concrete Arch Pipe End Section
0830	603-CF008	(S)	2	Each	65" x 40" Concrete Arch Pipe End Section
0840	603-SB018	(S)	4	Each	18" Branch Connections, Stub into Existing Box Culvert
0850	603-SB031	(S)	1	Each	24" Branch Connections, Stub into Inlet
0860	603-SB045	(S)	1	Each	42" Branch Connection, Stub Into Existing Inlet
0870	603-SB059	(S)	1	Each	66" Branch Connections, Stub into Box Culvert
0880	604-B001		1,750	Pounds	Gratings
0890	605-AA001	(S)	103	Square Yard	Geotextile for Subsurface Drainage, Type III
0900	605-O002	(S)	185	Linear Feet	4" Perforated Sewer Pipe for Underdrains, SDR 23.5
0910	605-P002	(S)	12	Linear Feet	4" Non-perforated Sewer Pipe for Underdrains, SDR 23.5
0920	605-W001	(GY)	7	Cubic Yard	Filter Material for Combination Storm Drain and/or Underdrains,Type A, FM
0930	606-B001		1,928	Linear Feet	Guard Rail, Class A, Type 1
0940	606-D012		2	Each	Guard Rail, Bridge End Section, Type D Modified
0950	606-D022		10	Each	Guard Rail, Bridge End Section, Type I
0960	606-E005		11	Each	Guard Rail, Terminal End Section, Flared
0970	606-E007		1	Each	Guard Rail, Terminal End Section, Non-Flared
0980	609-D004	(S)	9,328	Linear Feet	Combination Concrete Curb and Gutter Type 2 Modified
0990	612-B001		97	Cubic Yard	Flowable Fill, Non-Excavatable

Line No.	Item Code	Adj Code	Quantity	Units	Description [Fixed Unit Price]
1000	614-B001	(S)	3,479	Square Yard	Concrete Driveway, With Reinforcement
1010	615-A002	(S)	80	Linear Feet	Concrete Bridge End Barrier, 33.5"
1020	616-A001	(S)	55	Square Yard	Concrete Median and/or Island Pavement, 10-inch
1030	616-A004	(S)	3,601	Square Yard	Concrete Median and/or Island Pavement, 4-inch
1040	618-A001		1	Lump Sum	Maintenance of Traffic
1050	619-A1001		40	Mile	Temporary Traffic Stripe, Continuous White
1060	619-A2001		18	Mile	Temporary Traffic Stripe, Continuous Yellow
1070	619-A3001		24	Mile	Temporary Traffic Stripe, Skip White
1080	619-A3008		4,374	Linear Feet	Temporary Traffic Stripe, Skip White, Type 1 or 2 Tape
1090	619-A4002		12	Mile	Temporary Traffic Stripe, Skip Yellow
1100	619-A4007		1,079	Linear Feet	Temporary Traffic Stripe, Skip Yellow, Type 1 or 2 Tape
1110	619-A5001		156,720	Linear Feet	Temporary Traffic Stripe, Detail
1120	619-A5004		10,906	Linear Feet	Temporary Traffic Stripe, Detail, Type 1 or 2 Tape
1130	619-A6001		6,940	Square Feet	Temporary Traffic Stripe, Legend
1140	619-A6002		8,255	Linear Feet	Temporary Traffic Stripe, Legend
1150	619-C6001		21	Each	Red-Clear Reflective High Performance Raised Marker
1160	619-C7001		1,190	Each	Two-Way Yellow Reflective High Performance Raised Marker
1170	619-D1001		1,124	Square Feet	Standard Roadside Construction Signs, Less than 10 Square Feet
1180	619-D2001		2,952	Square Feet	Standard Roadside Construction Signs, 10 Square Feet or More
1190	619-E3001		2	Each	Changeable Message Sign
1200	619-F3001		12	Each	Delineators, Guard Rail, White
1210	619-G4001		24	Linear Feet	Barricades, Type III, Double Faced
1220	619-G4005		3,120	Linear Feet	Barricades, Type III, Single Faced
1230	619-G5001		1,261	Each	Free Standing Plastic Drums
1240	619-G7001		41	Each	Warning Lights, Type "B"
1250	619-H1001		1	Lump Sum	Traffic Signals
1260	619-K2004		6	Each	Installation and Removal of Guard Rail, Type I Bridge End Section
1270	619-K4001		6	Each	Installation and Removal of Guardrail, Terminal End Section
1280	620-A001		1	Lump Sum	Mobilization
1290	626-A004		12	Mile	6" Thermoplastic Traffic Stripe, Skip White
1300	626-C004		12	Mile	6" Thermoplastic Edge Stripe, Continuous White
1310	626-D003		4	Mile	6" Thermoplastic Traffic Stripe, Skip Yellow
1320	626-E004		7	Mile	6" Thermoplastic Traffic Stripe, Continuous Yellow
1330	626-F003		8	Mile	6" Thermoplastic Edge Stripe, Continuous Yellow

Line No.	Item Code	Adj Code	Quantity	Units	Description [Fixed Unit Price]
1340	626-G002		42,489	Linear Feet	Thermoplastic Detail Stripe, White
1350	626-G003		21,377	Linear Feet	Thermoplastic Detail Stripe, Yellow
1360	626-H004		3,564	Square Feet	Thermoplastic Legend, White
1370	626-H005		2,929	Linear Feet	Thermoplastic Legend, White
1380	627-J001		419	Each	Two-Way Clear Reflective High Performance Raised Markers
1390	627-K001		2,029	Each	Red-Clear Reflective High Performance Raised Markers
1400	627-L001		1,898	Each	Two-Way Yellow Reflective High Performance Raised Markers
1410	630-A001		772	Square Feet	Standard Roadside Signs, Sheet Aluminum, 0.080" Thickness
1420	630-A003		934	Square Feet	Standard Roadside Signs, Sheet Aluminum, 0.125" Thickness
1430	630-A005		621	Square Feet	Standard Roadside Signs, Sheet Aluminum, 0.1" Thickness
1440	630-C002		154	Linear Feet	Steel U-Section Posts, 2.0 lb/ft
1450	630-C003		2,232	Linear Feet	Steel U-Section Posts, 3.0 lb/ft
1460	630-E004		1,691	Pounds	Structural Steel Angles & Bars, 7/16" x 2 1/2" Flat Bar
1480	630-F002		44	Each	Delineators, Flexible Post Mounted, Crossover, Type I, Yellow
1490	630-F006		44	Each	Delineators, Guard Rail, White
1500	630-F007		42	Each	Delineators, Guard Rail, Yellow
1510	630-G005		12	Each	Type 3 Object Markers, OM-3R or OM-3L, Post Mounted
1520	630-K001		47	Linear Feet	Welded & Seamless Steel Pipe Posts, 3 1/2"
1530	630-K002		239	Linear Feet	Welded & Seamless Steel Pipe Posts, 3"
1540	630-K003		1,228	Linear Feet	Welded & Seamless Steel Pipe Posts, 4"
1550	632-A007		3	Each	Solid State Traffic Cabinet Assembly, Type III Cabinet, Type 1 Controller
1570	632-D009		1	Each	Solid State Traffic Actuated Controller, Type 1
1580	632-G001		1	Each	Malfunction Management Unit
1590	634-A039		1	Each	Traffic Signal Equipment Pole, Type II, 22' Shaft, 35' Arm
1600	634-A042		2	Each	Traffic Signal Equipment Pole, Type II, 22' Shaft, 50' Arm
1610	634-A043		1	Each	Traffic Signal Equipment Pole, Type II, 22' Shaft, 55' Arm
1615	634-A038		3	Each	Traffic Signal Equipment Pole, Type II, 22' Shaft, 30' Arm
1620	634-A051		1	Each	Traffic Signal Equipment Pole, Type II, 22' Shaft, 95' Arm
1630	634-A056		1	Each	Traffic Signal Equipment Pole, Type II, 30' Shaft, 45' Arm
1650	634-A182		1	Each	Traffic Signal Equipment Pole, Type II, 30' Shaft, 30' Arm
1660	634-A183		1	Each	Traffic Signal Equipment Pole, Type II, 30' Shaft, 35' Arm
1680	634-C005		32	Cubic Yard	Pole Foundations, Class "B" Concrete
1690	635-A059		20	Each	Traffic Signal Head, Type 1

Line No.	Item Code	Adj Code	Quantity	Units	Description [Fixed Unit Price]
1700	635-A060		2	Each	Traffic Signal Head, Type 1A
1710	635-A061		2	Each	Traffic Signal Head, Type 2
1720	635-A065		3	Each	Traffic Signal Head, Type 2 FYA
1730	636-B015		471	Linear Feet	Electric Cable, Underground in Conduit, IMSA 20-1, AWG 14, 4 Conductor
1740	636-B016		1,457	Linear Feet	Electric Cable, Underground in Conduit, IMSA 20-1, AWG 14, 5 Conductor
1750	636-B018		1,275	Linear Feet	Electric Cable, Underground in Conduit, IMSA 20-1, AWG 14, 8 Conductor
1760	636-B051		222	Linear Feet	Electric Cable, Underground in Conduit, THHN, AWG #6, 3 Conductor
1770	636-C006		91	Linear Feet	Electric Cable, Aerial Supported, IMSA 20-1, AWG 14, 4 Conductor
1780	636-C009		534	Linear Feet	Electric Cable, Aerial Supported, IMSA 20-1, AWG 14, 8 Conductor
1790	637-A009		17	Each	Pull Box Enclosure, Type 2, Tier 22
1800	637-A011		3	Each	Pull Box Enclosure, Type 3, Tier 22
1810	637-C028		1,312	Linear Feet	Traffic Signal Conduit, Underground, Type 4, 2"
1820	637-C030		123	Linear Feet	Traffic Signal Conduit, Underground, Type 4, 3"
1830	637-D003		2,282	Linear Feet	Traffic Signal Conduit, Underground Drilled or Jacked, Rolled Pipe, 3"
1840	638-A006		3	Each	Flasher Assembly, Prepare To Stop
1850	638-D001		4	Each	School Zone Flasher Assembly - Solar Powered
1860	641-A002		9	Each	Signal Stop Bar Radar Detection, 1 Sensor, Type 2
1870	641-B002		6	Each	Signal Advanced Radar Detection, 1 Sensor, Type 2
1880	641-D001		2,121	Linear Feet	Radar Detection Communication Cable
1890	647-A001		1	Lump Sum	Removal of Existing Traffic Signal Equipment
1900	653-A002		38	Square Feet	Traffic Sign, Type III
1910	653-B003		80	Square Feet	Street Name Sign, Type III
1940	699-A001		1	Lump Sum	Roadway Construction Stakes
1950	815-A007	(S)	6,085	Ton	Loose Riprap, Size 300
1960	815-E001	(S)	1,549	Square Yard	Geotextile under Riprap
1970	815-F002	(S)	900	Ton	Sediment Control Stone
1980	907-630-PP002		246	Square Feet	Roadside Directional Signs, Sheet Aluminum, 0.125" Thickness, Ground Mounted
1990	907-663-C001		4	Each	Cellular Modem
2000	907-906001		1,040	Hours	Trainees [$5.00]
			ALTERNATE GROUP AA NUMBER 1		
2010	304-F001	(GT)	47,713	Ton	3/4" and Down Crushed Stone Base
			ALTERNATE GROUP AA NUMBER 2		
2020	304-F002	(GT)	47,713	Ton	Size 610 Crushed Stone Base
			ALTERNATE GROUP AA NUMBER 3		

Line No.	Item Code	Adj Code	Quantity	Units	Description [Fixed Unit Price]
2030	304-F003	(GT)	47,713	Ton	Size 825B Crushed Stone Base
			ALTERNATE GROUP BB NUMBER 1		
2040	308-A001		190	Ton	Cement
2050	308-B002	(M)	13,427	Square Yard	Soil-Cement-Water Mixing, Optional Mixers, Base
2060	308-S001	(A3)	4,048	Gallon	Bituminous Curing Seal
			ALTERNATE GROUP BB NUMBER 2		
2070	311-A001	(M)	13,427	Square Yard	10" Processing Lime and Fly Ash Treated Course
2080	311-B001		187	Ton	Lime
2090	311-C001		754	Ton	Fly Ash, Class C
2100	311-S001	(A3)	4,048	Gallon	Bituminous Curing Seal
			ALTERNATE GROUP CC NUMBER 1		
2110	308-A001		1,521	Ton	Cement
2120	308-B003	(M)	98,151	Square Yard	Soil-Cement-Water Mixing, Optional Mixers, Design Soil
2130	308-S001	(A3)	23,952	Gallon	Bituminous Curing Seal
			ALTERNATE GROUP CC NUMBER 2		
2140	311-A005	(M)	98,151	Square Yard	8" Processing Lime and Fly Ash Treated Course
2150	311-B001		883	Ton	Lime
2160	311-C001		3,531	Ton	Fly Ash, Class C
2170	311-S001	(A3)	23,952	Gallon	Bituminous Curing Seal
			ALTERNATE GROUP DD NUMBER 1		
2180	628-G001		2,187	Linear Feet	6" High Performance Cold Plastic Traffic Stripe, Skip White
2190	628-K001		2,187	Linear Feet	High Performance Cold Plastic Detail Stripe, White
2200	628-K002		2,187	Linear Feet	High Performance Cold Plastic Detail Stripe, Yellow
			ALTERNATE GROUP DD NUMBER 2		
2210	907-624-A002		2,187	Linear Feet	6" Inverted Profile Thermoplastic Traffic Stripe, Skip White
2220	907-624-E001		2,187	Linear Feet	Inverted Profile Thermoplastic Detail Traffic Stripe, White
2230	907-624-E003		2,187	Linear Feet	Inverted Profile Thermoplastic Detail Traffic Stripe, Yellow
			ALTERNATE GROUP EE NUMBER 1		
2240	605-W002	(GY)	150	Cubic Yard	Filter Material for Combination Storm Drain and/or Underdrains,Type B, FM
			ALTERNATE GROUP EE NUMBER 2		
2250	605-W003	(GY)	150	Cubic Yard	Filter Material for Combination Storm Drain and/or Underdrains,Type C, FM
			Bridge Items		
2260	501-K001		1,280	Square Yard	Transverse Grooving
2270	803-B001		3	Each	Conventional Static Pile Load Test [$5,000.00]
2280	803-D007	(S)	665	Linear Feet	HP 14 x 89 Steel Piling

Line No.	Item Code	Adj Code	Quantity	Units	Description [Fixed Unit Price]
2290	803-D005	(S)	1,895	Linear Feet	HP 14 x 117 Steel Piling
2300	803-I003	(S)	5	Each	PDA Test Pile, HP Steel Pile
2310	803-J001	(S)	4	Each	Pile Restrike
2320	804-A001	(S)	364	Cubic Yard	Bridge Concrete, Class AA
2330	804-A004	(S)	386	Cubic Yard	Bridge Concrete, Class BD
2340	804-C065	(S)	947	Linear Feet	40' Prestressed Concrete Beam, Type I+2
2350	804-C121	(S)	957	Linear Feet	80' Prestressed Concrete Beam, Type III
2360	805-A001	(S)	121,353	Pounds	Reinforcement
2370	809-A003	(S)	3,698	Square Feet	Retaining Wall System, Mechanically Stabilized
2380	813-A002	(S)	649	Linear Feet	Concrete Railing, 32"
2390	815-A007	(S)	2,204	Ton	Loose Riprap, Size 300
2400	815-E001	(S)	2,418	Square Yard	Geotextile under Riprap
2410	907-824-PP005		3	Cubic Feet	Bridge Repair, Epoxy Mortar Repair
2420	907-824-PP006		14	Each	Bridge Repair, Cleaning of Caps
2430	907-824-PP008		739	Linear Feet	Bridge Repair, Pile Encasement Repairs, Per Plans

FORM CSD-612
Rev. 1 / 2015

YEAR 2018 PROGRESS SCHEDULE YEAR 2019

PROJECT NUMBER STP-0022-04(063) / 102607303
COUNTY Pontotoc

WORK PHASE NO.	DESCRIPTION	LINE NUMBERS	JAN	FEB	MAR	APRIL	MAY	JUNE	JULY	AUGUST	SEPTEMBER	OCTOBER	NOV	DEC	JAN	FEB	MAR	APRIL	MAY	JUNE	JULY	AUGUST	SEPTEMBER	OCTOBER	NOV	DEC	
1	Miscellaneous	10-150, 210-470, 590, 610-690, 840-1280, 1410-2000, 2240-2250						0																			279
2	Excavation & Drainage	160-200, 700-830						5					102				120										274
3	Base & Paving	480-580, 2010-2170							32				102				120			173							
4	Bridges	2260-2430																		183							274
5	Pavement Markings	600, 1290-1400, 2180-2230																									
				YEAR 2020																							
(con't) 1	Miscellaneous	10-150, 210-470, 590, 610-690, 840-1280, 1410-2000, 2240-2250	279							397																	
(con't) 2	Excavation & Drainage	160-200, 700-830		292			326	350		372																	
(con't) 3	Base & Paving	480-580, 2010-2170		292					350																		
(con't) 4	Bridges	2260-2430		292				336																			
(con't) 5	Pavement Markings	600, 1290-1400, 2180-2230						350	355																		
	LET:	March 27, 2018																									
	NOA:	April 10, 2018																									
	NTP/BCT:	June 11, 2018																									
	W.D.:	397																									
MONTH			JAN	FEB	MAR	APRIL	MAY	JUNE	JULY	AUGUST	SEPTEMBER	OCTOBER	NOV	DEC	JAN	FEB	MAR	APRIL	MAY	JUNE	JULY	AUGUST	SEPTEMBER	OCTOBER	NOV	DEC	172 WORKING DAYS PER YEAR
ANTICIPATED WORKING DAYS PER MONTH			6	7	11	15	19	20	21	21	20	16	11	5	6	7	11	15	19	20	21	21	20	16	11	5	

NOTE: THE ANTICIPATED WORKING DAYS SHOWN ON THIS SCHEDULE ARE FOR INFORMATIONAL PURPOSES ONLY.
THE ACTUAL WORKING DAY TOTAL AS ASSESSED BY THE PROJECT ENGINEER ON FORM CSD-765 SHALL GOVERN.

FMS CON:102607/303000

ADDENDUM

STATE	PROJECT NO.
MISS.	STP-0022-04(063)

DESCRIPTION OF SHEET	WKG. NO.	SH. NO.
TITLE SHEET (1)		1
DETAILED INDEX & GENERAL NOTES (5)		
DETAILED INDEX	DI-1	2
DETAILED INDEX	DI-2	3
DETAILED INDEX	DI-3	4
DETAILED INDEX	DI-4	5
GENERAL NOTES	GN-1	6
TYPICAL SECTION SHEETS (13)		
TYPICAL SECTION - HWY. 15, 3 TO 5 LANE TRANSITION	TS-1	7
TYPICAL SECTION - HWY. 15, 5 LANE STA. 270+20 TO STA. 328+59.371	TS-2	8
TYPICAL SECTION - HWY. 15, WIDENING & OVERLAY	TS-3	9
TYPICAL SECTION - HWY. 15, NEW CONSTRUCTION	TS-4	10
TYPICAL SECTION - HWY. 15, WIDENING & OVERLAY, UNDERCUT	TS-5	11
TYPICAL SECTION - LOCAL ROADS	TS-6	12
TYPICAL SECTION - LOCAL ROADS	TS-7	13
TYPICAL SECTION - LOCAL ROADS	TS-8	14
TYPICAL SECTION - LOCAL ROADS	TS-9	15
TYPICAL SECTION - LOCAL ROADS	TS-10	16
TYPICAL SECTION - LOCAL ROADS	TS-11	17
TYPICAL SECTION - LOCAL ROADS	TS-12	18
TYPICAL SECTION - TEMP. CONNECTION AT E.O.P.	TS-13	19
QUANTITY SHEETS (6)		
SUMMARY OF QUANTITIES	SQ-1	20
SUMMARY OF QUANTITIES	SQ-2	21
SUMMARY OF QUANTITIES	SQ-3	22
SUMMARY OF QUANTITIES	SQ-4	23
SUMMARY OF QUANTITIES	SQ-5	24
SUMMARY OF QUANTITIES	SQ-6	25
ESTIMATED QUANTITIES (18)		
ESTIMATED QUANTITIES - REMOVAL ITEMS	EQ-1	26
ESTIMATED QUANTITIES - DRAINAGE STRUCTURES	EQ-2	27
ESTIMATED QUANTITIES - SIDE DRAINS	EQ-3	28
ESTIMATED QUANTITIES - SIDE DRAINS, TEMP. DRIVES & REMOVAL OF PAV'T	EQ-4	29
ESTIMATED QUANTITIES - DRIVEWAYS REQ'D.	EQ-5	30
ESTIMATED QUANTITIES - DRIVEWAYS REQ'D.	EQ-6	31
ESTIMATED QUANTITIES - SILT BASINS, & GUARDRAIL REQ'D.	EQ-7	32
ESTIMATED QUANTITIES - EROSION CONTROL & EARTHWORK REQ'D.	EQ-8	33
ESTIMATED QUANTITIES - BOX CULV., BR. END PAV'T. & C&G REQ'D.	EQ-9	34
ESTIMATED QUANTITIES - TRAFFIC CONTROL ITEMS REQ'D.	EQ-10	35
ESTIMATED QUANTITIES - PAVEMENT MARKINGS REQ'D.	EQ-11	36
ESTIMATED QUANTITIES - TRAFFIC CONTROL SIGNS REQ'D.	EQ-12	37
SIGN QUANTITIES	SRS-1	38
SIGN QUANTITIES	SRS-2	39
SIGN QUANTITIES	SRS-3	40
SIGN QUANTITIES	SRS-4	41
SIGN QUANTITIES	SRS-5	42
SIGN QUANTITIES	SRS-6	43
PLAN & PROFILE SHEETS (43)		
MAINLINE - B.O.P. - STA. 130+00 LT. LN.	WK. 3LT	44
MAINLINE - B.O.P. - STA. 130+00 RT. LN.	WK. 3RT	45
MAINLINE - STA. 130+00 - STA. 160+00 LT. LN.	WK. 4LT	46
MAINLINE - STA. 130+00 - STA. 160+00 RT. LN.	WK. 4RT	47
LOCAL RD. LT. @ STA. 135+10.698	WK. 4A	48
LOCAL RD. RT. @ STA. 140+23	WK. 4B	49
MAINLINE - STA. 160+00 - STA. 190+00 LT. LN.	WK. 5LT	50

DESCRIPTION OF SHEET	WKG. NO.	SH. NO.
PLAN & PROFILE SHEETS - CONTINUED		
MAINLINE - STA. 160+00 - STA. 190+00 RT. LN.	WK. 5RT	51
MAINLINE - STA. 190+00 - STA. 220+00 LT. LN.	WK. 6LT	52
MAINLINE - STA. 190+00 - STA. 220+00 RT. LN.	WK. 6RT	53
LOCAL RD. LT. @ STA. 193+89.718	WK. 6A	54
LOCAL RD. RT. @ STA. 206+54.36	WK. 6B	55
MAINLINE - STA. 220+00 - STA. 250+00 LT. LN.	WK. 7LT	56
MAINLINE - STA. 220+00 - STA. 250+00 RT. LN.	WK. 7RT	57
LOCAL RD. LT. @ STA. 223+89.89	WK. 7A	58
LOCAL RD. LT. & RT. @ STA. 248+65.88	WK. 7B	59
MAINLINE - STA. 250+00 - STA. 280+00 LT. LN.	WK. 8LT	60
MAINLINE - STA. 250+00 - STA. 280+00 RT. LN.	WK. 8RT	61
LOCAL RD. LT. & RT. @ STA. 275+52.96	WK. 8A	62
MAINLINE - STA. 280+00 - STA. 310+00 LT. LN.	WK. 9LT	63
MAINLINE - STA. 280+00 - STA. 310+00 RT. LN.	WK. 9RT	64
LOCAL RD. RT. @ STA. 286+35.86	WK. 9A	65
MAINLINE - STA. 310+00 - STA. 340+00 LT. LN.	WK. 10LT	66
MAINLINE - STA. 310+00 - STA. 340+00 RT. LN.	WK. 10RT	67
HWY. 346 LT. @ STA. 323+25	WK. 10A	68
MAINLINE - STA. 340+00 - STA. 370+00 LT. LN.	WK. 11LT	69
MAINLINE - STA. 340+00 - STA. 370+00 RT. LN.	WK. 11RT	70
LOCAL RD. LT. @ STA. 347+25	WK. 11A	71
HWY. 345 RT. @ STA. 358+00	WK. 11B	72
MAINLINE - STA. 370+00 - STA. 400+00 LT. LN.	WK. 12LT	73
MAINLINE - STA. 370+00 - STA. 400+00 RT. LN.	WK. 12RT	74
LOCAL RD. LT. & RT. @ STA. 385+00	WK. 12A	75
MAINLINE - STA. 400+00 - STA. 430+00 LT. LN.	WK. 13LT	76
MAINLINE - STA. 400+00 - STA. 430+00 RT. LN.	WK. 13RT	77
LOCAL RD. RT. @ STA. 403+98.052	WK. 13A	78
LOCAL RD. RT. @ STA. 411+71.169	WK. 13B	79
MAINLINE - STA. 430+00 - STA. 460+00 LT. LN.	WK. 14LT	80
MAINLINE - STA. 430+00 - STA. 460+00 RT. LN.	WK. 14RT	81
TANGLEFOOT TRAIL	WK. 14A	82
LOCAL RD. LT. & RT. @ STA. 445+93.393	WK. 14B	83
TEMPORARY CONNECTION AT E.O.P.	WK. 14C	84
MAINLINE - STA. 460+00 - STA. 470+00 LT. LN.	WK. 15LT	85
MAINLINE - STA. 460+00 - STA. 470+00 RT. LN.	WK. 15RT	86
SPECIAL DESIGN SHEETS (120)		
VEGETATION SCHEDULE	VS-1	87
EROSION CONTROL	EC-1	88
MISCELLANEOUS TYPICAL SECTION DETAILS	MTSD	89
GUARDRAIL: TYPICAL INSTALLATION AT BRIDGE APPROACHES FOR DIVIDED HIGHWAYS	SDGR-4	90
SUPERELEVATION - CASE I (ROTATION ABOUT CENTERLINE)	SDSE-2A	91
SUPERELEVATION RUNOFF - CASE I (ROTATION ABOUT CENTERLINE)	SDRO-1	92
PIPE CULVERT INSTALLATION	SDPI-1	93
BOX CULVERT BENDING DETAIL - HORIZONTAL AND VERTICAL	BBD-1	94
CONSTRUCTION SIGNING - BOP TO STA. 210+00+/-	CS-1	95
CONSTRUCTION SIGNING - STA. 210+00+/- TO STA. 328+00+/-	CS-2	96
CONSTRUCTION SIGNING - STA. 328+00+/- TO STA. 450+00+/-	CS-3	97
CONSTRUCTION SIGNING - STA 450+00+/- TO EOP	CS-4	98

PS & E PLANS-DATE 12-13-17		
FMS CON. # 102607/303000		
REVISIONS		
DATE	SHEET NO.	BY
1/18/18	2, 4, 5, 7, 8, 10, 20, 22, 23, 24, 25, 27, 29, 30, 31, 32, 33, 38, 39, 40, 41, 42, 43, 50, 51, 60, 61, 69, 70, 73, 74, 178, 184, 185, 186, 187, 189, 1001 - 1016 & 2001 - 2022	TAD
1/24/18	23, 25	DSP
3/7/18	4, 7, 23, 24, 25, 36, 38, 39, 42, 43, 44, 45, 118, 1003, 10009, 1010, 1011, 1012, 1013, 2001, 2002, 2003, 2004, 2005, 2006, 2007, 2023	DSP

MISSISSIPPI DEPARTMENT OF TRANSPORTATION

DETAILED INDEX

REVISION | BY | DATE

PROJECT NO. STP-0022-04(063)
COUNTY : PONTOTOC

FILENAME: DI.DGN
DESIGN TEAM ____ CHECKED ____ DATE ____

WORKING NUMBER DI-1

SHEET NUMBER 2

PLAN
ROADWAY DESIGN DIVISION
MISSISSIPPI DEPARTMENT OF TRANSPORTATION

3/9/2018 10:52:09 AM DGN

FMS CON:102607/303000

ADDENDUM

STATE	PROJECT NO.
MISS.	STP-0022-04(063)

DESCRIPTION OF SHEET	WKG. NO.	SH. NO.
PERMANENT SIGNING PLANS (13)		
PERMANENT SIGNING PLAN	PSP-1	1001
PERMANENT SIGNING PLAN	PSP-2	1002
PERMANENT SIGNING PLAN	PSP-3	1003
PERMANENT SIGNING PLAN	PSP-4	1004
PERMANENT SIGNING PLAN	PSP-5	1005
PERMANENT SIGNING PLAN	PSP-6	1006
PERMANENT SIGNING PLAN	PSP-7	1007
PERMANENT SIGNING PLAN	PSP-8	1008
PERMANENT SIGNING PLAN	PSP-9	1009
PERMANENT SIGNING PLAN	PSP-10	1010
PERMANENT SIGNING PLAN	PSP-11	1011
PERMANENT SIGNING PLAN	PSP-12	1012
PERMANENT SIGNING PLAN	PSP-13	1013
PERMANENT SIGNING DETAILS (3)		
PERMANENT SIGNING DETAIL	PSD-1	1014
PERMANENT SIGNING DETAIL	PSD-2	1015
PERMANENT SIGNING DETAIL	PSD-3	1016
TRAFFIC SIGNAL (7) 1		
TRAFFIC SIGNALS	TSI-1	2001
TRAFFIC SIGNALS	TSI-2	2002
TRAFFIC SIGNALS	TSI-3	2003
TEMPORARY TRAFFIC SIGNAL DETAIL	TEMP-1	2004
TEMPORARY TRAFFIC SIGNAL DETAIL	TEMP-2	2005
TEMPORARY TRAFFIC SIGNAL DETAIL	TEMP-3	2006
1 TEMPORARY TRAFFIC SIGNAL DETAIL	TEMP-4	2007 1
TRAFFIC SIGNAL STANDARDS (15)		
TRAFFIC SIGNAL GENERAL NOTES	TSD-1	2008 1
TRAFFIC SIGNAL HEADS, TRAFFIC SIGNAL SIGNS AND WIND SPEEDS	TSD-2	2009 1
CURVED MAST ARM AND PEDESTAL POLE DETAILS	TSD-3C	2010 1
STRAIGHT MAST ARM AND PEDESTAL POLE DETAILS	TSD-3S	2011 1
SIGNAL POLE AND PEDESTAL POLE FOUNDATION DETAILS	TSD-4	2012 1
TRAFFIC SIGNAL GROUNDING DETAILS	TSD-5	2013 1
CONTROLLER CABINET AND POWER SERVICE DETAILS	TSD-6	2014 1
POWER SERVICE PEDESTAL	TSD-7	2015 1
PULL BOX AND CONDUIT TRENCHING DETAILS	TSD-8	2016 1
SRVD RADAR INSTALLATION FOR TRAFFIC SIGNALS	TSD-9R	2017 1
TRAFFIC CONTROL PLAN (TYPICAL SIGNAL INSTALLATION)	TSD-10	2018 1
STREET NAME SIGN DETAILS	TSD-11	2019 1
SPAN WIRE DETAILS	TSD-12	2020 1
TEMPORARY SIGNAL POLE DETAILS	TSD-13	2021 1
PREPARE TO STOP WHEN FLASHING ASSEMBLY (VERTICAL)	RSP-19V	2022 1
SPECIAL POST DESIGN FOR SCHOOL SPEED ZONE FLASHER	RSP-20	2023 1
STANDARD DRAWINGS - ROADWAY SHEETS (76) AUG. 1, 2017 VERSION		
BRIDGE END PAVEMENT WITH RAIL, OVERLAY, AND SLEEPER SLAB (NEW CONSTRUCTION)	BE-1	6007
BRIDGE END PAVEMENT RAIL (33.5" RAIL HEIGHT)	BER-1	6009
CONCRETE ISLAND PAVEMENT DETAILS	CIP-1	6011
PAVEMENT MARKING DETAILS FOR 2-LANE & 4-LANE UNDIVIDED ROADWAYS	PM-1	6051
PAVEMENT MARKING DETAIL FOR 3, 4-LANE & 5-LANE UNDIVIDED ROADWAYS	PM-2	6052
PAVEMENT MARKING LEGEND DETAILS	PM-5	6055
PAVEMENT MARKING LEGEND DETAILS	PM-6	6056
TYPICAL PAVEMENT MARKING DETAIL FOR MEDIAN CROSSOVERS	PM-9	6059
2-WAY RAISED PAVEMENT MARKERS AT INTERSECTING ROADS (2-LANE)	PM-11	6061
2-WAY RAISED PAVEMENT MARKERS AT INTERSECTING ROADS (4-LANE)	PM-12	6062
OFFSET LEFT TURN LANES	PM-13	6063
RUMBLE STRIPES 2-LANE HIGHWAYS (ASPHALT LANES, 2-FT ASPHALT SHOULDERS)	RS-1	6064
RUMBLE STRIPES 4-LANE HIGHWAYS (ASPHALT LANES, 2-FT OR WIDER ASPHALT SHOULDERS)	RS-2	6065

DESCRIPTION OF SHEET	WKG. NO.	SH. NO.
TEMPORARY TYPICAL EROSION/SEDIMENT CONTROL APPLICATIONS	ECD-1	6101
DETAILS OF SEDIMENT BARRIER APPLICATIONS	ECD-2	6102
DETAILS OF SILT FENCE INSTALLATION	ECD-3	6103
DITCH CHECK STRUCTURES, TYPICAL APPLICATIONS AND DETAILS	ECD-4	6104
TEMPORARY EROSION, SEDIMENT, AND WATER POLLUTION CONTROL MEASURES	ECD-5	6105
DETAILS OF EROSION CONTROL WATTLE DITCH CHECK	ECD-6	6106
DETAILS OF EROSION CONTROL SILT DIKE DITCH CHECK	ECD-7	6107
ROCK DITCH CHECK	ECD-8	6108
ROCK FILTER DAM	ECD-9	6109
ROCK DITCH CHECK WITH SUMP EXCAVATION	ECD-10	6110
INLET PROTECTION TYPICAL APPLICATIONS AND DETAILS	ECD-11	6111
INLET PROTECTION DETAILS FOR COARSE AGGRECATE ON GRADES & SAGS	ECD-12	6112
INLET PROTECTION DETAILS OF WATTLES	ECD-13	6113
INLET PROTECTION DETAILS OF MANUFACTURED INLET PROTECTION DEVICE	ECD-14	6114
INLET PROTECTION DETAILS OF SAND BAG	ECD-15	6115
STABILIZED CONSTRUCTION ENTRANCE	ECD-16	6116
TEMPORARY CULVERT STREAM CROSSING	ECD-17	6117
TEMPORARY STREAM DIVERSION	ECD-18	6118
TEMPORARY STREAM DIVERSION (BOX EXTENSIONS)	ECD-19	6119
FLOATING TURBIDITY CURTAIN	ECD-20	6120
DETAILS OF EROSION CONTROL SANDBAG DITCH CHECK	ECD-21	6121
SEDIMENT RETENTION BARRIER	ECD-22	6122
DETAILS OF TYPICAL DITCH TREATMENTS	DT-1	6123
DITCH TREATMENT INSTALLATION DETAIL FOR SOIL REINFORCING MAT	DT-1A	6124
TYPICAL TEMPORARY EROSION CONTROL MEASURES (TEMPORARY SLOPE DRAIN AND TYPE A SILT BASIN)	BAS-A	6125
TYPICAL TEMPORARY EROSION CONTROL MEASURES (TYPE D SILT BASIN)(135 CU. YDS. CAPACITY PER ACRE OD DRAINAGE)	BAS-D	6129
GUARDRAIL: "W" BEAM (WOOD POSTS)	GR-1	6201
GUARDRAIL: THRIE BEAM (WOOD POSTS)	GR-1A	6202
GUARDRAIL: "W" BEAM (STEEL POSTS)	GR-1B	6203
GUARDRAIL: TYPE 1 CABLE ANCHORAGE (FOUNDATION TUBE)	GR-3	6212
GUARDRAIL: TYPE 1 CABLE ANCHORAGE (CONCRETE FOOTING)	GR-3A	6213
GUARDRAIL (TEMPORARY): TYPICAL INSTALLATION AT BRIDGE END DURING CONSTRUCTION PHASES	TGR-2	6220
BREAKAWAY SIGN SUPPORT	SN-6B	6312
TYPICAL INSTALLATION & DETAILS OF DELINEATORS AND DISTANCE REFERENCE SIGNS	SN-8	6314
TYPICAL CROSSOVER DELINEATION	SN-8B	6316
TYPICAL GUARDRAIL DELINEATION	SN-8C	6317
SIGNING DETAILS FOR BRIDGE APPROACHES	SN-9	6318
TRAFFIC CONTROL PLAN WITH FLAGGER (ONE-LANE CLOSURE OF TWO WAY TRAFFIC)	TCP-1	6351
TRAFFIC CONTROL PLAN FOR POSTED SPEED LIMIT LESS THAN 65 MPH (4-LANE: MEDIAN LANE OR OUTSIDE LANE CLOSURE)(WORK DAY ONLY)	TCP-2	6352
SHORT DURATION CLOSING OF TWO-LANE TWO-WAY HIGHWAYS	TCP-6	6355
HIGHWAY SIGN AND BARRICADE DETAILS FOR CONSTRUCTION PROJECTS	TCP-8	6358

DATE	REVISION	BY
3/7/18	ADDED SHEET	DSP
1/18/18	ADDED SHEET & REVISED SHEET NO.	TAD

MISSISSIPPI DEPARTMENT OF TRANSPORTATION

DETAILED INDEX

PROJECT NO. STP-0022-04(063)
COUNTY : PONTOTOC

FILENAME: DI.DGN
DESIGN TEAM _____ CHECKED _____ DATE _____

WORKING NUMBER DI-3

SHEET NUMBER 4

PLAN ROADWAY DESIGN DIVISION MISSISSIPPI DEPARTMENT OF TRANSPORTATION
3/9/2018 7:25:15 AM DI.DGN

FMS CON:102607/303000

ADDENDUM

STATE	PROJECT NO.
MISS.	STP-0022-04(063)

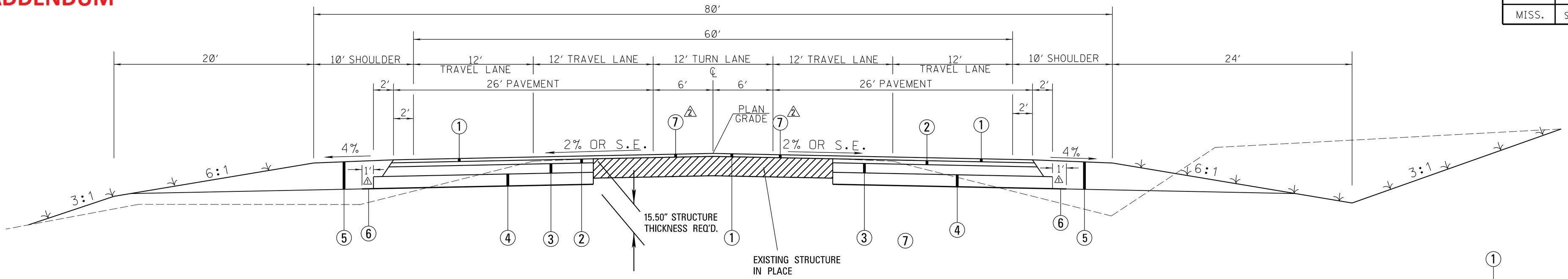

5 LANE SECTION

STA. 116+38.127 TO STA. 118+00

1. 1.5" ASPHALT PAVEMENT, MT (9.5 MM MIX) (1 @ 1.5")
2. 2.5" ASPHALT PAVEMENT, MT (19 MM MIX) (1 @ 2.5")
3. 3.5" ASPHALT PAVEMENT, MT (19 MM MIX) (1 @ 3.5")
4. 11.0" CRUSHED STONE BASE REQ'D.
5. 18.5" GRANULAR MATERIAL (CLASS 3, GROUP "C") REQ'D.
6. TYPE V GEOTEXTILE FABRIC (NONE-WOVEN) REQ'D.
7. 1.5" AND VAR. DEPTH MILLING

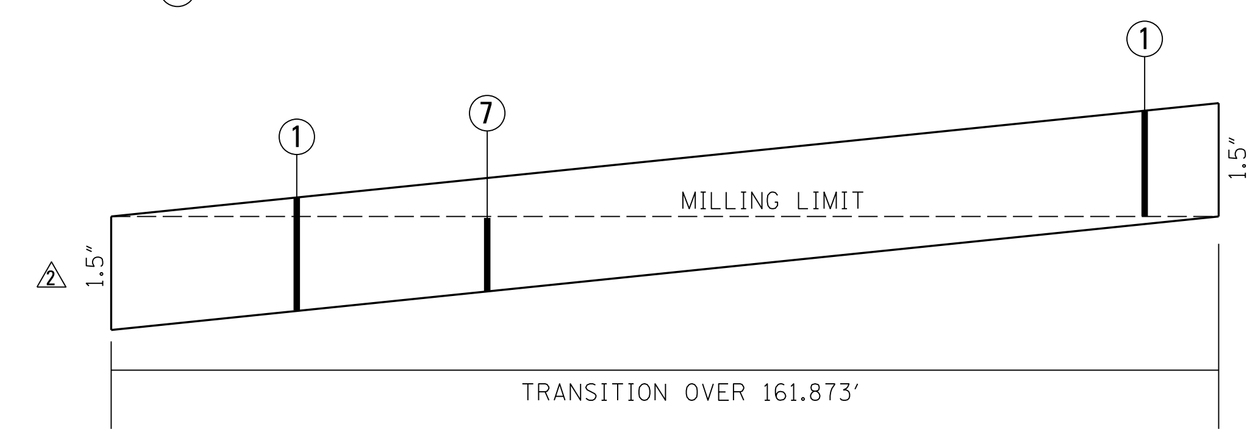

INDICATES AREA TO BE TREATED IN ACCORDANCE WITH THE VEGETATION SCHEDULE. SEE WK. SH. NO. VS-1

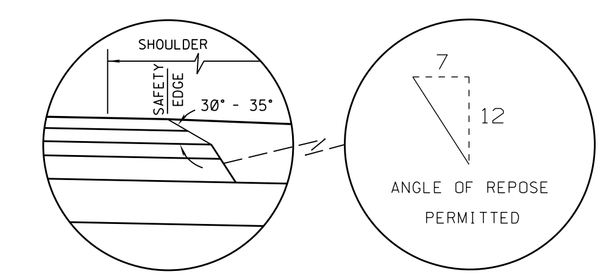

SAFETY EDGE REQ'D TOP 2 LIFTS ONLY (NOT A PAY ITEM) NEW CONSTRUCTION

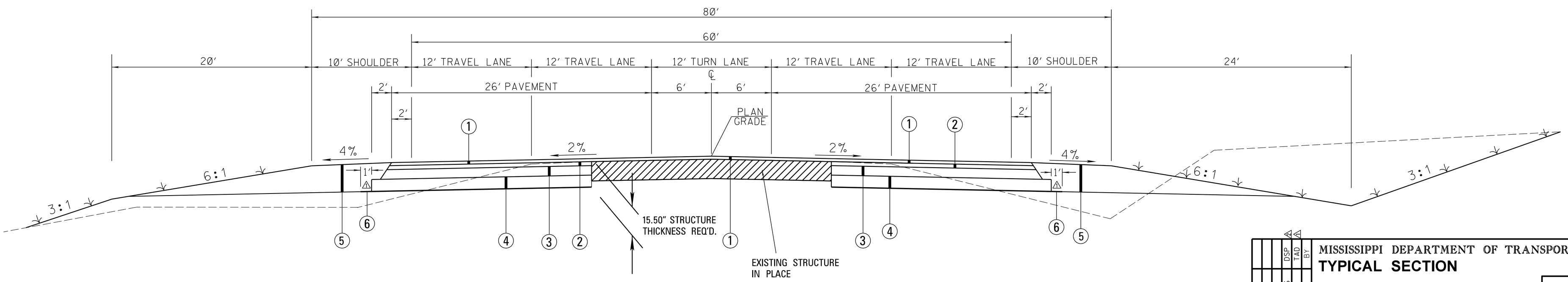

5 LANE SECTION

STA. 118+00 TO STA. 153+38.541

DATE	REVISION	BY
3/6/18	ADDED MILLING AND REVISED LIMITS	DSP
1/18/18	ADDED DEMENTION FOR GEO. FABRIC	TAD

MISSISSIPPI DEPARTMENT OF TRANSPORTATION

TYPICAL SECTION

5 LN. SECTION

STA. 116+38.127 TO

STA. 153+38.541

COUNTY: PONTOTOC

PROJ. NUM.: STP-0022-04(063)

FILENAME: TYPSEC.DGN

DESIGN TEAM _____ CHECKED _____ DATE _____

WORKING NUMBER TS-1

SHEET NUMBER 7

PLAN
ROADWAY DESIGN DIVISION
MISSISSIPPI DEPARTMENT OF TRANSPORTATION

3/6/2018 11:46:56 AM PSEC.DGN

ADDENDUM

STATE	PROJECT NO.
MISS	STP-0022-04(063)

SUMMARY OF QUANTITIES (SHEET 4)

PAY ITEM NO.	PAY ITEM	UNIT	PONTOTOC : 102607-303000 Prelim	Final	
605-W002	Filter Material for Combination Storm Drain and/or Underdrains,Type B, FM	CY	150		
	OR				
605-W003	Filter Material for Combination Storm Drain and/or Underdrains,Type C, FM	CY	150		
	GUARDRAIL				
606-B001	Guard Rail, Class A, Type 1	LF	1,928		1
606-D012	Guard Rail, Bridge End Section, Type D Modified	EA	2		
606-D022	Guard Rail, Bridge End Section, Type I	EA	10		
606-E005	Guard Rail, Terminal End Section, Flared	EA	11		1
606-E007	Guard Rail, Terminal End Section, Non-Flared	EA	1		1
	INCIDENTAL CONSTRUCTION				
609-D004	Combination Concrete Curb and Gutter Type 2 Modified	LF	9,328		
612-B001	Flowable Fill, Non-Excavatable	CY	97		1
614-B001	Concrete Driveway, With Reinforcement	SY	3,479		1
615-A002	Concrete Bridge End Barrier, 33.5"	LF	80		
616-A001	Concrete Median and/or Island Pavement, 10-inch	SY	55		
616-A004	Concrete Median and/or Island Pavement, 4-inch	SY	3,601		
618-A001	Maintenance of Traffic	LS	1		
	TRAFFIC CONTROL				
619-A1001	Temporary Traffic Stripe, Continuous White	MI	40		
619-A2001	Temporary Traffic Stripe, Continuous Yellow	MI	18		
619-A3001	Temporary Traffic Stripe, Skip White	MI	24		
619-A3008	Temporary Traffic Stripe, Skip White, Type 1 or 2 Tape	LF	4,374		
619-A4002	Temporary Traffic Stripe, Skip Yellow	MI	12		
619-A4007	Temporary Traffic Stripe, Skip Yellow, Type 1 or 2 Tape	LF	1,079		
619-A5001	Temporary Traffic Stripe, Detail	LF	156,720		
619-A5004	Temporary Traffic Stripe, Detail, Type 1 or 2 Tape	LF	10,906		
619-A6001	Temporary Traffic Stripe, Legend	SF	6,940		
619-A6002	Temporary Traffic Stripe, Legend	LF	8,255		
619-C6001	Red-Clear Reflective High Performance Raised Marker	EA	21		
619-C7001	Two-Way Yellow Reflective High Performance Raised Marker	EA	1,190		
619-D1001	Standard Roadside Construction Signs, Less than 10 Square Feet	SF	1,124		
619-D2001	Standard Roadside Construction Signs, 10 Square Feet or More	SF	2,952		1
619-E3001	Changeable Message Sign	EA	2		
619-F3001	Delineators, Guard Rail, White	EA	12		
619-G4001	Barricades, Type III, Double Faced	LF	24		
619-G4005	Barricades, Type III, Single Faced	LF	3,120		
619-G5001	Free Standing Plastic Drums	EA	1,261		
619-G7001	Warning Lights, Type "B"	EA	41		
619-H1001	Traffic Signals	LS	1		2 1 2 3
619-K2004	Installation and Removal of Guard Rail, Type I Bridge End Section	EA	6		
619-K4001	Installation and Removal of Guardrail, Terminal End Section	EA	6		

1. FOR PIPES AT STA. 151+50 AND STA. 385+75.
2. TEMPORARY TRAFFIC SIGNALS TO BE AT MS 15 @ MS 346 AND MS 15 @ MS 345. SEE TEMP-1, TEMP-2, TEMP-3 AND TEMP-4 FOR DETAILS. THIS PAY ITEM INCLUDES RADAR DETECTION CABLE BUT NOT RADAR DETECTOR UNITS. (3)

Date	Revision	By
01/18/2018	REVISED PAYITEMS, QUANTITIES, AND NOTES (1)	TD
01/24/2018	REVISED PAY ITEM QUANTITIES (2)	DP
03/09/2018	REVISED PAY ITEM QUANTITIES (3)	DP

MISSISSIPPI DEPARTMENT OF TRANSPORTATION
SUMMARY OF QUANTITIES

Proj No: STP-0022-04(063)
County: PONTOTOC

FILENAME : SQS
Design Team DOVER Checked Date

Working Number SQ-4
Sheet Number 23

ADDENDUM

STATE	PROJECT NO.
MISS	STP-0022-04(063)

SUMMARY OF QUANTITIES (SHEET 5)

PAY ITEM NO.	PAY ITEM	UNIT	PONTOTOC : 102607-303000 Prelim	Final	
620-A001	Mobilization	LS	1		
	PAVEMENT MARKING - BRIDGE				
907-624-A002	6" Inverted Profile Thermoplastic Traffic Stripe, Skip White	LF	2,187		1
907-624-E001	Inverted Profile Thermoplastic Detail Traffic Stripe, White	LF	2,187		1
907-624-E003	Inverted Profile Thermoplastic Detail Traffic Stripe, Yellow	LF	2,187		1
	OR				
628-G001	6" High Performance Cold Plastic Traffic Stripe, Skip White	LF	2,187		1
628-K001	High Performance Cold Plastic Detail Stripe, White	LF	2,187		1
628-K002	High Performance Cold Plastic Detail Stripe, Yellow	LF	2,187		1
	PAVEMENT MARKING				
626-D003	6" Thermoplastic Traffic Stripe, Skip Yellow	MI	4		
626-E004	6" Thermoplastic Traffic Stripe, Continuous Yellow	MI	7		
626-F003	6" Thermoplastic Edge Stripe, Continuous Yellow	MI	8		
626-G002	Thermoplastic Detail Stripe, White	LF	42,489		3
626-G003	Thermoplastic Detail Stripe, Yellow	LF	21,377		3
626-H004	Thermoplastic Legend, White	SF	3,564		1 3
626-H005	Thermoplastic Legend, White	LF	2,929		
627-J001	Two-Way Clear Reflective High Performance Raised Markers	EA	419		
627-K001	Red-Clear Reflective High Performance Raised Markers	EA	2,029		3
627-L001	Two-Way Yellow Reflective High Performance Raised Markers	EA	1,898		3
	TRAFFIC SIGNS & DELINEATORS				
630-A001	Standard Roadside Signs, Sheet Aluminum, 0.080" Thickness	SF	772		1
630-A003	Standard Roadside Signs, Sheet Aluminum, 0.125" Thickness	SF	934		1
630-A005	Standard Roadside Signs, Sheet Aluminum, 0.1" Thickness	SF	621		1
630-C002	Steel U-Section Posts, 2.0 lb/ft	LF	154		1
630-C003	Steel U-Section Posts, 3.0 lb/ft	LF	2,232		1 3
630-E004	Structural Steel Angles & Bars, 7/16" x 2 1/2" Flat Bar	LBS	1,691		1 3
630-F002	Delineators, Flexible Post Mounted, Crossover, Type I, Yellow	EA	44		3
630-F006	Delineators, Guard Rail, White	EA	44		1
630-F007	Delineators, Guard Rail, Yellow	EA	42		
630-G005	Type 3 Object Markers, OM-3R or OM-3L, Post Mounted	EA	12		
630-K001	Welded & Seamless Steel Pipe Posts, 3 1/2"	LF	47		1
630-K002	Welded & Seamless Steel Pipe Posts, 3"	LF	239		1
630-K003	Welded & Seamless Steel Pipe Posts, 4"	LF	1,228		1
907-630-PP002	Roadside Directional Signs, Sheet Aluminum, 0.125" Thickness, Ground Mounted	SF	246		1
	SIGNALS				
632-A007	Solid State Traffic Cabinet Assembly, Type III Cabinet, Type 1 Controller	EA	3		1 3 1
632-D009	Solid State Traffic Actuated Controller, Type 1	EA	1		1 3 4 1
632-G001	Malfunction Management Unit	EA	1		4 1
634-A038	Traffic Signal Equipment Pole, Type II, 22' Shaft, 30' Arm	EA	3		2 3

1 (1) TRAFFIC CONTROLLERS SHALL BE ETHERNET READY WITH LINUX BASED OPERATION SYSTEM AND COMPATIBLE WITH MDOT'S EXISTING TRAFFIC SIGNAL MANAGEMENT SOFTWARE. ALL TRAFFIC SIGNAL CONTROLLER FIRMWARE SHALL BE CAPABLE OF DELAYING THE ONSET OF FLASHING YELLOW ARROW. ALL EQUIPMENT SHALL BE NEW, INCLUDING MMU2. GPS CLOCK NOT REQUIRED. CONTROLLER CABINET SHALL HAVE A 30 AMP MAIN BREAKER AND A THIRD AUXILARY BREAKER IF A CAMERA PANEL IS CALLED FOR IN THE PLANS. CABINET SHALL HAVE A DETECTOR CARD RACK WITH 5 SLOT POSITIONS AND WILL NOT REQUIRE 2 ADDITIONAL PREEMPTION SLOTS TO THE RIGHT. SIGNAL CONTROLLER SHALL BE ECOMM COMPATIBLE. POWER SERVICE PANELS SHALL BE GROUND MOUNTED PEDESTALS, AS SPECIFIED IN SECTION 722.13.3 OF THE REDBOOK, EXCEPT THEY SHALL BE NON-PAINTED ALUMINUM, RATHER THAN LIGHT GREEN.

1 (2) POLES SHALL BE HOT DIPPED, GALVANIZED, BLACK IN COLOR. DESIGN STANDARD FOR MAST ARM POLES SHALL BE 2013 AASHTO STANDARD SPECIFICATIONS FOR STRUCTURAL SUPPORTS FOR HIGHWAY SIGNS, AND TRAFFIC SIGNALS. REINFORCED HANDHOLE SHALL BE A MINIMUM NOMINAL SIZE OF 4" x 26". POLES TO BE DESIGNED TO 90 MPH.

(3) SIGNAL TIMINGS SHALL BE REQUESTED TWO WEEKS IN ADVANCE OF PROPOSED SIGNAL TURN-ON. TIMINGS WILL BE PROVIDED BY MDOT TED AMANDA CLARK (601) 359-1454.

(4) TO BE PLACED AT MS 15 @ WALMART.

1 2

Date	Revision	By
01/18/2018	REVISED PAYITEMS, QUANTITIES, AND NOTES	TD
03/09/2018	REVISED PAY ITEM QUANTITIES	DP

MISSISSIPPI DEPARTMENT OF TRANSPORTATION
SUMMARY OF QUANTITIES

Proj No: STP-0022-04(063)
County: PONTOTOC

FILENAME : SQS
Design Team DOVER Checked Date

Working Number SQ-5

Sheet Number 24

ADDENDUM

STATE	PROJECT NO.
MISS	STP-0022-04(063)

SUMMARY OF QUANTITIES (SHEET 7)

PAY ITEM NO.	PAY ITEM	UNIT	PONTOTOC : 102607-303000 Prelim	Final	
634-A039	Traffic Signal Equipment Pole, Type II, 22' Shaft, 35' Arm	EA	1		(2) △3
634-A042	Traffic Signal Equipment Pole, Type II, 22' Shaft, 50' Arm	EA	2		(2) △3
634-A043	Traffic Signal Equipment Pole, Type II, 22' Shaft, 55' Arm	EA	1		(2) △3
634-A051	Traffic Signal Equipment Pole, Type II, 22' Shaft, 95' Arm	EA	1		(2)
634-A056	Traffic Signal Equipment Pole, Type II, 30' Shaft, 45' Arm	EA	1		(2)
634-A182	Traffic Signal Equipment Pole, Type II, 30' Shaft, 30' Arm	EA	1		(2)
634-A183	Traffic Signal Equipment Pole, Type II, 30' Shaft, 35' Arm	EA	1		(2) △1
634-C005	Pole Foundations, Class "B" Concrete	CY	32		
635-A059	Traffic Signal Head, Type 1	EA	20		△1
635-A060	Traffic Signal Head, Type 1A	EA	2		
635-A061	Traffic Signal Head, Type 2	EA	2		
635-A065	Traffic Signal Head, Type 2 FYA	EA	3		
636-B015	Electric Cable, Underground in Conduit, IMSA 20-1, AWG 14, 4 Conductor	LF	471		(5) △1
636-B016	Electric Cable, Underground in Conduit, IMSA 20-1, AWG 14, 5 Conductor	LF	1,457		(5) △1
636-B018	Electric Cable, Underground in Conduit, IMSA 20-1, AWG 14, 8 Conductor	LF	1,275		(5) △1
636-B051	Electric Cable, Underground in Conduit, THHN, AWG #6, 3 Conductor	LF	222		(5) (6) △1
636-C006	Electric Cable, Aerial Supported, IMSA 20-1, AWG 14, 4 Conductor	LF	91		(7) △1
636-C009	Electric Cable, Aerial Supported, IMSA 20-1, AWG 14, 8 Conductor	LF	534		(7) △1
637-A009	Pull Box Enclosure, Type 2, Tier 22	EA	17		△3
637-A011	Pull Box Enclosure, Type 3, Tier 22	EA	3		
637-C028	Traffic Signal Conduit, Underground, Type 4, 2"	LF	1,312		(8) △1 △3
637-C030	Traffic Signal Conduit, Underground, Type 4, 3"	LF	123		(8) △1
637-D003	Traffic Signal Conduit, Underground Drilled or Jacked, Rolled Pipe, 3"	LF	2,282		(8) △1 △3
638-A006	Flasher Assembly, Prepare To Stop	EA	3		(9) △1 △3
638-D001	School Zone Flasher Assembly - Solar Powered	EA	4		
641-A002	Signal Stop Bar Radar Detection, 1 Sensor, Type 2	EA	9		△1 △3
641-B002	Signal Advanced Radar Detection, 1 Sensor, Type 2	EA	6		△1 △3
641-D001	Radar Detection Communication Cable	LF	2,121		△1
647-A001	Removal of Existing Traffic Signal Equipment	LS	1		(4) △1 △2
653-A002	Traffic Sign, Type III	SF	38		△1
653-B003	Street Name Sign, Type III	SF	80		△1 △3
907-663-C001	Cellular Modem	EA	4		(3) △3
699-A001	Roadway Construction Stakes	LS	1		
815-A007	Loose Riprap, Size 300	TON	6,085		(1) △1
815-E001	Geotextile under Riprap	SY	1,549		△1
815-F002	Sediment Control Stone	TON	900		△1

(1) INCLUDES 5245 TONS FOR THE CONSTRUCTION OF TYPE "D" SILT BASINS.

△1 (2) POLES SHALL BE HOT DIPPED, GALVANIZED, BLACK IN COLOR. DESIGN STANDARD FOR MAST ARM POLES SHALL BE 2013 AASHTO STANDARD SPECIFICATIONS FOR STRUCTURAL SUPPORTS FOR HIGHWAY SIGNS, AND TRAFFIC SIGNALS. REINFORCED HANDHOLE SHALL BE A MINIMUM NOMINAL SIZE OF 4" x 26". POLES TO BE DESIGNED TO 90 MPH.

△3 (3) TO BE FURNISHED BY MDOT AND INSTALLED BY CONTRACTOR, AND SIGNALS INTEGRATED INTO THE MDOT SYSTEM.

△3 (4) LOCATIONS OF EXISTING SIGNALS ARE MS 15 @ MS 345 AND MS 15 @ MS 346. EXISTING SIGNAL CABINETS, CONTROLLERS, CONFLICT MONITORS, SIGNAL HEADS, AND SIGNS TO BE SALVAGED TO MDOT TUPELO PROJECT OFFICE.

(5) MEASURED UNDERGROUND HORIZONTALLY ALONG THE CONDUIT ONLY IN THE HORIZONTAL PLANE. NO ADDTIONAL QUANTITY SHALL BE ADDED FOR DEPTH OR CHANGE IN ELEVATION.

(6) TO BE USED FOR SIGNAL POWER.

(7) MEASURED VERTICALLY ALONG THE MAST ARM POLE AND HORIZONTALLY ALONG THE MAST ARM.

(8) MEASURED FROM CENTER TO CENTER OF PULLBOX AND/OR FOUNDATION. MEASUREMENT OF UNDERGROUND CONDUIT SHALL BE ONLY IN THE HORIZONTAL PLANE. NO ADDITIONAL QUANTITY SHALL BE ADDED FOR THE DEPTH OF CHANGE IN ELEVATION. TRACER WIRE, MARKING TAPE, AND CONDUIT DETECTION WIRE ARE NOT REQUIRED, UNLESS SPECIFICALLY CALLED OUT IN THE PLANS.

△3 (9) ONE WILL BE LOCATED AT MS 15 @ MS 346 AND TWO AT MS 15 @ MS 345.

Date	Revision	By
01/18/2018	REVISED PAYITEMS, QUANTITIES, AND NOTES	TD △1
01/24/2018	REVISED PAY ITEM QUANTITIES	DP △2
03/09/2018	REVISED PAY ITEM QUANTITIES	DP △3

MISSISSIPPI DEPARTMENT OF TRANSPORTATION
SUMMARY OF QUANTITIES

Proj No: STP-0022-04(063)
County: PONTOTOC

FILENAME : SQS
Design Team DOVER Checked Date

Working Number SQ-6

Sheet Number 25

ADDENDUM

STATE	PROJECT NO.
MISS.	STP-0022-04(063)

SUMMARY OF PAVEMENT MARKINGS

WK. SH. NO.	STATION TO STATION		PAINT						THERMOPLASTIC										TAPE					MARKERS				REMARKS
			CONTINUOUS		DETAIL	LEGEND	SKIP		CONTINUOUS		LEGEND		EDGE		DETAIL		SKIP			DETAIL		SKIP		RED	YELLOW		CLEAR	
			WHITE	YELLOW			WHITE	YELLOW	WHITE	YELLOW	WHITE	WHITE	WHITE	YELLOW	WHITE	YELLOW	WHITE	YELLOW		WHITE	YELLOW	WHITE	YELLOW	— CLEAR	1 WAY	2 WAY	2 WAY	
PPM-1	118+00	133+00								1 4044		1 258	3000		1 763	1 408	800	3000						1 99		1 274	2	
PPM-2	133+00	142+50								1580	340	98.4	1171		960	310	1580	1580						40		147	132	
	142+50	150+00								1500		98.4	1500				1506	1496						37		110		
PPM-3	150+00	158+00								1440		32.8	1694	806		504	1694	380						44		80		
	158+00	187+89										95.9	5513	5981	180	736	5965			562	562	562		161		5		
PPM-4	187+89	196+65								942	48	235.6	1240	761	2928	1059	1680							69		13		
	196+65	203+76											1422	1422			1440							36				
PPM-5	203+76	212+49									152	155.7	1383	758	1351	1470	1704							69		9	41	
	212+49	217+85											1072	1072			1000							27				
PPM-6	217+85	226+62								952	48	256.9	1764	760	2390	1047	1680							70		10		
	226+62	242+67 RT											3553	3553			3560							88				246+10 LT. LN.
PPM-7	242+67	251+12								719	240	155.7	392	188	1628	833	760							47		13	42	
PPM-8	246+10	254+67								935	48	145.0	862	199	2225	568	760							43		6		
	251+12 RT	263+00											2021	2021			2040							50				254+67 LT. LN.
PPM-9	263+00	270+20								868			1414	1147		312	1400	240						35		26		
PPM-10	270+20	279+42								2354	352	216.2	732		4381	769	1680	920						55		122	57	
	279+42	284+00										65.6	917	917			920	880								50		
PPM-11	284+00	289+00								1705	179		652		1036		1000	1040						22		79	58	
	289+00	320+49								6305			6305		426		6280	6240						157		473		
PPM-12	320+49	325+56								2214	364	145.0	873	760	2529	793	800	160						39		64		
PPM-13	325+56	334+00								1600		32.8	1615	517		612	1645	550						41		95		
	334+00	341+25											1443	1443			1440							36				
PPM-14	341+25	349+92								1161	48	262.3	867	489	2941	1031	1548			120	120	120		70		10		
	349+92	355+25														65	78			1153	1153	1153		28				
PPM-15	355+25	364+00								1297	376	183.4	2018	542	1994	5553	1514			76	76	76		48		117		
	364+00	379+00											3341	3240		102	3341							102				382+42 LT. LN.
PPM-16	382+42 LT	391+00								2342	56	145.0	2326	202	2160	550	800							41		22		
PPM-17	379+00	387+59								678	48	262.4	342	202	2594	832	780							43		11		
	387+59 RT	401+21											2383	2383			2383							63				391+00 LT. LN.
PPM-18	401+21	408+86								471	48	262.4	1022	649	2414	948	1450							65		8		
PPM-19	408+86	417+71								396	48	262.4	1228	553	2549	1287	1690							70		9		
	417+71	440+09											4199	4199			4199			276	276	276		112				
PPM-20	440+09	449+00								1570	486	194.1	1601	776	2427	1075	1622							75		15	87	
PPM-21	449+00	457+84									48		1746	1347	235	513	1108							36		6		
PPM-22	457+84	E.O.P.								620			1703	346	4378		320							11		124		
										L.F.			L.F.	L.F.			L.F.	L.F.										
									1 35693				63314	37233			62167	16486										
UNITS										MI.	L.F.	S.F.	MI.	MI.	L.F.	L.F.	MI.	MI.		L.F.	L.F.	L.F.		EA.		EA.	EA.	
TOTALS										1 6.8	2929	3564 1	12.0	7.1	42489 1	21377 1	11.8	3.1		2187	2187	2187		2029 1	1 1898		419	

DATE	REVISED QUANTITIES REVISION	DSP BY
3/6/18		

MISSISSIPPI DEPARTMENT OF TRANSPORTATION

ESTIMATED QUANTITIES

PAVEMENT MARKINGS

COUNTY: PONTOTOC

PROJ. NUM.: STP-0022-04(063)

FILENAME: EQ.DGN

DESIGN TEAM _____ CHECKED _____ DATE _____

WORKING NUMBER EQ-11

SHEET NUMBER 36

PLAN ROADWAY DESIGN DIVISION MISSISSIPPI DEPARTMENT OF TRANSPORTATION

3/6/2018 11:26:50 AM EQ.DGN

FMS CON:102607-303000

ADDENDUM

STATE	PROJECT NO.
MISS.	STP-0022-04(063)

1

STANDARD ROADSIDE SIGNS

SHEET ALUMINUM 0.080" THICKNESS

SIGN NUMBER	SIZE	UNIT AREA (SQ. FT.)	QUANTITY REQUIRED	TOTAL SIGN AREA (SQ. FT.)	REMARKS
M1-4	30"x24"	5.00	3	15.00	
M1-5	30"x24"	5.00	11	55.00	
M1-5	24"x24"	4.00	19	76.00	
M2-1	21"x15"	2.19	8	17.52	
M3-1	24"x12"	2.00	7	14.00	
M3-2	24"x12"	2.00	2	4.00	
M3-3	24"x12"	2.00	6	12.00	
M3-4	24"x12"	2.00	4	8.00	
M5-1L	21"x15"	2.19	1	2.19	
M6-1L	21"x15"	2.19	6	13.14	
M6-1R	21"x15"	2.19	7	15.33	
OM-3L	12"x36"	3.00	6	18.00	
OM-3R	12"x36"	3.00	6	18.00	
R1-2	36"x36"x36"	3.90	44	171.60	
R2-1	24"x30"	5.00	4	20.00	
R3-9B	24"x36"	6.00	10	60.00	
R6-1L	36"x12"	3.00	35	105.00	
R6-1R	36"x12"	3.00	17	51.00	
R6-3	30"x24"	5.00	8	40.00	
R6-3A	30"x24"	5.00	6	30.00	
S4-3P	36"x12"	3.00	2	6.00	
S5-1	24"x30"	5.00	2	10.00	
S5-2	24"x30"	5.00	2	10.00	
W16-9P	36"x12"	3.00	2	6.00	
TOTAL (0.080" THICKNESS)				771.78	

STANDARD ROADSIDE SIGNS

SHEET ALUMINUM 0.010" THICKNESS

SIGN NUMBER	SIZE	UNIT AREA (SQ. FT.)	QUANTITY REQUIRED	TOTAL SIGN AREA (SQ. FT.)	REMARKS
R1-1	36" OCTAGON	7.46	8	59.68	
R2-1	36"x48"	12.00	6	72.00	
R5-1	36"x36"	9.00	31	279.00	
R5-1a	42"x30"	8.75	24	210.00	
TOTAL (0.010" THICKNESS)				620.68	

STANDARD ROADSIDE SIGNS

SHEET ALUMINUM 0.125" THICKNESS

SIGN NUMBER	SIZE	UNIT AREA (SQ. FT.)	QUANTITY REQUIRED	TOTAL SIGN AREA (SQ. FT.)	REMARKS
R1-1	48" OCTAGON	13.25	9	119.25	
R4-7	48"x60"	20.00	4	80.00	
R5-1	48"x48"	16.00	2	32.00	
R6-1L	54"x18"	6.75	8	54.00	
S1-1	48"x48"	16.00	2	32.00	
W3-1a	36"x36"	9.00	8	72.00	
W3-1a	48"x48"	16.00	9	144.00	
W3-3	36"x36"	9.00	4	36.00	
W3-3	48"x48"	16.00	5	80.00	
W4-2L	48"x48"	16.00	1	16.00	
W4-4P	48"x24"	8.00	3	24.00	
W6-1	48"x48"	16.00	1	16.00	
W6-2	48"x48"	16.00	2	32.00	
W6-3	48"x48"	16.00	2	32.00	
W8-13	48"x48"	16.00	6	96.00	2
W9-1L	36"x36"	9.00	1	9.00	
W9-2R	36"x36"	9.00	1	9.00	
W9-2	48"x48"	16.00	1	16.00	
W13-2	36"x48"	12.00	1	12.00	
W19-1L	48"x48"	16.00	1	16.00	
E5-1	30"X30"	6.25	1	6.25	
TOTAL (0.125" THICKNESS)				933.50	

DATE	REVISION	BY
3/7/18	REVISE SIGN NAME	WCJ 4
1-22-18	REVISE SIGN QUANTITIES	WCJ 4

MISSISSIPPI DEPARTMENT OF TRANSPORTATION

STANDARD ROADSIDE

SIGN QUANTITIES

COUNTY: PONTOTOC

PROJ. NUM.: STP-0022-04(063)

FILENAME: EQ-SRS.DGN

DESIGN TEAM _____ CHECKED _____ DATE _____

WORKING NUMBER SRS-1

SHEET NUMBER 38

PLAN
ROADWAY DESIGN DIVISION
MISSISSIPPI DEPARTMENT OF TRANSPORTATION

3/9/2018 7:58:09 A:\EQ-SRS.DGN

ADDENDUM

STATE	PROJECT NO.
MISS.	STP-0022-04(063)

1

STANDARD ROADSIDE SIGN ASSEMBLIES REQUIRED

SHEET NUMBER	CODE NUMBER THIS SHEET	STANDARD ROADSIDE SIGNS TO BE MOUNTED	STANDARD PIPE 3"	STANDARD PIPE 3½"	STANDARD PIPE 4"	STANDARD PIPE 5"	U-SECTION POST 2-P	U-SECTION POST 3-P	STRUCTURAL BARS 7/16"x2-1/2"	FOOTING CLASS "B" CONCRETE
PSP-1	1	R1-2						14.00		
	2	M3-4, M1-5, M1-4, M6-1R M3-2, M1-5, M1-4, M5-1L	17.54				2@3'-0"		4@2'-8"	0.12
	3	R6-1R						12.53		
	4	W3-3			15.47				2@2'-7"	0.13
	5	M2-1, M1-4, M1-5	14.16							
	6	R5-1a	24.00						2@1'-0"	0.12
	7	W3-3			15.47				2@2'-7"	0.13
	8	R5-1		14.13					2@2'-4"	0.12
	9	E5-1 (GREEN & WHITE)	16.00						2@2'-4"	0.12
	10	W13-2	14.63						2@2'-4"	0.13
	11	R1-2, R5-1						13.90		
	12	W3-3			15.47				2@2'-7"	0.13
	13	M3-1, M1-5, M6-1L, M3-3, M1-5, M6-1R	15.29				2@4'-9"		2@2'-8"	0.12
	14	R5-1a (1)								
	15	M3-1, M1-5						13.08		
	16	R2-1			14.63				2@2'-4"	0.12
	A	PONTOTOC			16.00		2@4'-0"		2@1'	0.33
	B	PONTOTOC, TUPELO, OXFORD			16.00		2@5'-6"		2@1'	0.33
	C	PONTOTOC COUNTY AGRI-CENTER			16.00		2@5'-0"		2@1'	0.33
	D	PONTOTOC, NEW ALBANY			16.00		2@6'-6"		2@1'	0.33
TOTAL THIS BLOCK			LIN. FT.	LIN. FT.	LIN. FT.	LIN. FT.	LIN. FT.	LIN. FT.	LIN. FT. / POUNDS	CU. YDS.
			101.62	14.13	125.04	0.00	57.50	53.51	60.19 / 224.07	2.56

STANDARD ROADSIDE SIGN ASSEMBLIES REQUIRED

SHEET NUMBER	CODE LETTER THIS SHEET	STANDARD ROADSIDE SIGNS TO BE MOUNTED	STANDARD PIPE 3"	STANDARD PIPE 3½"	STANDARD PIPE 4"	STANDARD PIPE 5"	U-SECTION POST 2-P	U-SECTION POST 3-P	STRUCTURAL BARS 7/16"x2-1/2"	FOOTING CLASS "B" CONCRETE
PSP-2	1	R3-9B						13.50		
	2	R6-1L,R1-1,R6-1R,W4-4P			16.00				2@2'-6"	0.13
	3	W3-1a			15.47				2@2'-7"	0.13
	4	R3-9B						13.50		
	5	R3-9B						13.50		
	6	W3-1a			15.47				2@2'-7"	0.13
	7	R6-1L,R1-1,R6-1R,W4-4P			16.00				2@2'-6"	0.13
	8	R3-9B						13.50		
	9	W6-2			15.47				2@2'-7"	0.13
	10	R4-7			16.13				3@2'-6"	0.13
PSP-3	1	R1-2, R6-1L						14.00		
	2	R5-1a						2@14.00		
	3	OM-3R						12.00		
	4	W8-13 (2)			15.47				2@2'-7"	0.13
	5	R5-1a						2@14.00		
	6	R1-2, R6-1L						14.00		
	7	W8-13 (2)			15.47				2@2'-7"	0.13
	8	OM-3L						12.00		
	9	OM-3R						12.00		
	10	OM-3L						12.00		
	11	R5-1a						2@13.63		
	E	FRIENDSHIP			16.00		2@3'-6"		2@1'	0.33
TOTAL THIS BLOCK			LIN. FT.	LIN. FT.	LIN. FT.	LIN. FT.	LIN. FT.	LIN. FT.	LIN. FT. / POUNDS	CU. YDS.
			0.00	0.00	141.48	0.00	7.00	213.26	42.84 / 159.45	1.37

(1) PLACE ON BACK OF SIGN (D)

NOTE: VERIFY ALL POST LENGTHS IN THE FIELD PRIOR TO ORDERING MATERIAL.

DATE	REVISION	BY
3/7/18	REVISE SIGN NAME	WCJ
1-22-18	REVISED QUANTITIES	WCJ

MISSISSIPPI DEPARTMENT OF TRANSPORTATION

STANDARD ROADSIDE

SIGN QUANTITIES

COUNTY: PONTOTOC

PROJ. NUM.: STP-0022-04(063)

FILENAME: EQ-SRS.DGN

DESIGN TEAM _____ CHECKED _____ DATE _____

WORKING NUMBER SRS-2

SHEET NUMBER 39

PLAN
ROADWAY DESIGN DIVISION
MISSISSIPPI DEPARTMENT OF TRANSPORTATION

3/9/2018 7:58:51 AM EQ-SRS.DGN

ADDENDUM

STATE	PROJECT NO.
MISS.	STP-0022-04(063)

1

STANDARD ROADSIDE SIGN ASSEMBLIES REQUIRED

SHEET NUMBER	CODE NUMBER THIS SHEET	STANDARD ROADSIDE SIGNS TO BE MOUNTED	STANDARD PIPE 3"	STANDARD PIPE 3½"	STANDARD PIPE 4"	STANDARD PIPE 5"	U-SECTION POST 2-P	U-SECTION POST 3-P	STRUCTURAL BARS 7/16"x2-1/2"	FOOTING CLASS "B" CONCRETE
PSP-9	1	M2-1, M1-5						13.33		
	2	R1-2						14.00		
	3	R6-1L,R1-1,R6-1R, R6-3a			18.00				2@2'-6"	0.13
	4	M3-1, M1-5, M6-1L, M3-3, M1-5, M6-1R	15.29				2@4'-5"		2@2'-8"	0.12
	5	W3-1a			15.47				2@2'-7"	0.13
	6	M2-1, M1-5						14.16		
	7	R1-2, R5-1						13.90		
	8	R5-1a						2@14.00		
	9	R5-1a						2@14.00		
	10	OM-3R						12.00		
	11	R5-1						14.13		
	12	R6-1L						12.00		
	13	W8-13 2			15.47				2@2'-7"	0.13
	14	M1-5, M6-1L						14.16		
	15	M2-1, M1-5						14.16		
	16	R5-1a						2@14.00		
	17	W8-13 2			15.47				2@2'-7"	0.13
	18	R5-1						14.13		
	19	R1-2, R6-1L						14.00		
	20	R1-2						14.00		
	21	R6-1L						12.00		
	22	R5-1						14.13		
	23	OM-3R						12.00		
	24	OM-3L						12.00		
	25	M2-1, M1-5						14.16		
	26	W3-3			15.47				2@2'-7"	0.13
	27	M1-5, M6-1R						14.16		
	28	R1-2, R6-1L						14.00		
	29	OM-3L						12.00		
	30	R1-2, R5-1						13.90		
	31	M3-2, M1-5						14.16		
	32	M2-1, M1-5						14.16		
	33	W3-3			15.47				2@2'-7"	0.13
	34	M3-1, M1-5, M6-1L, M3-3, M1-5, M6-1R	15.29				2@4'-5"		2@2'-8"	0.12
	35	R1-2						14.00		
	36	R5-1a						2@14.00		
	J	DOWNTOWN ECRU NEXT RIGHT						2@16.00		
	K	PONTOTOC, ECRU						2@16.00		
TOTAL THIS BLOCK			LIN. FT.	LIN. FT.	LIN. FT.	LIN. FT.	LIN. FT.	LIN. FT.	LIN. FT. / POUNDS	CU. YDS.
			30.58	0.00	95.35	0.00	18.00	500.64	41.50 / 154.46	1.02

STANDARD ROADSIDE SIGN ASSEMBLIES REQUIRED

SHEET NUMBER	CODE LETTER THIS SHEET	STANDARD ROADSIDE SIGNS TO BE MOUNTED	STANDARD PIPE 3"	STANDARD PIPE 3½"	STANDARD PIPE 4"	STANDARD PIPE 5"	U-SECTION POST 2-P	U-SECTION POST 3-P	STRUCTURAL BARS 7/16"x2-1/2"	FOOTING CLASS "B" CONCRETE
PSP-10	1	W3-3			15.47				2@2'-7"	0.13
	2	R1-2						14.00		
	3	R5-1						14.13		
	4	R6-1L,R1-1,R6-1R, R6-3			18.00				2@2'-6"	0.13
	5	W3-1a			15.47				2@2'-7"	0.13
	6	R1-2, R5-1						13.90		
	7	R1-2, R6-1L						14.00		
	8	R5-1						14.13		
	9	R5-1a						2@14.00		
	10	R2-1, S5-2			16.13				3@2'-4"	0.13
	11	R5-1a						2@14.00		
	12	R1-2, R6-1L						14.00		
	13	R1-2, R5-1						13.90		
	14	W3-1a			15.47				2@2'-7"	0.13
	15	R6-1L,R1-1,R6-1R, R6-3			18.00				2@2'-6"	0.13
	16	R1-2						14.00		
	17	S1-1, S4-3P, W16-9P		16.34					4@2'-4"	0.12
	18	S5-1 1	2@16.06							
	19	R5-1a						2@14.00		
	L	CAIRO						2@12.00		
TOTAL THIS BLOCK			LIN. FT.	LIN. FT.	LIN. FT.	LIN. FT.	LIN. FT.	LIN. FT.	LIN. FT. / POUNDS	CU. YDS.
			32.12	16.34	98.54	0.00	0.0	220.06	41.83 / 163.14	0.90

1 2 FLASHING MODULES REQ'D.

NOTE: VERIFY ALL POST LENGTHS IN THE FIELD PRIOR TO ORDERING MATERIAL.

DATE	REVISION	BY
3/7/18	REVISE SIGN NAME	WCJ
1-22-18	REVISED QUANTITIES	WCJ

MISSISSIPPI DEPARTMENT OF TRANSPORTATION

STANDARD ROADSIDE

SIGN QUANTITIES

COUNTY: PONTOTOC

PROJ. NUM.: STP-0022-04(063)

FILENAME: EQ-SRS.DGN

DESIGN TEAM ____ CHECKED ____ DATE ____

WORKING NUMBER SRS-5

SHEET NUMBER 42

PLAN
ROADWAY DESIGN DIVISION
MISSISSIPPI DEPARTMENT OF TRANSPORTATION

3/9/2018 7:59:56 AM EQ-SRS.DGN

STATE	PROJECT NO.
MISS.	STP-0022-04(063)

ADDENDUM

STANDARD ROADSIDE SIGN ASSEMBLIES REQUIRED

SHEET NUMBER	CODE NUMBER THIS SHEET	STANDARD ROADSIDE SIGNS TO BE MOUNTED	STANDARD PIPE 3"	STANDARD PIPE 3½"	STANDARD PIPE 4"	STANDARD PIPE 5"	U-SECTION POST 2-P	U-SECTION POST 3-P	STRUCTURAL BARS 7/16"x2-1/2"	FOOTING CLASS "B" CONCRETE
PSP-11	1	R5-1						14.13		
	2	R1-2						14.00		
	3	R6-1L						12.00		
	4	R5-1						14.13		
	5	R5-1a						2@14.00		
	6	R5-1						14.13		
	7	R6-1L						12.00		
	8	R5-1a						2@14.00		
	9	S5-1 (1)	2@16.06							
	10	S1-1, S4-3P, W16-9P		16.34					4@2'-4"	0.12
	11	R1-2, R5-1						13.90		
	12	W3-1a			15.47				2@2'-7"	0.13
	13	R6-1L,R1-1,R6-1R, R6-3a			18.00				2@2'-6"	0.13
	14	R1-2						14.00		
	15	R1-2, R6-1L						14.00		
	16	R5-1a						2@14.00		
	17	R1-2, R5-1						13.90		
	18	W3-1a			15.47				2@2'-7"	0.13
	19	R6-1L,R1-1,R6-1R, R6-3a			18.00				2@2'-6"	0.13
	20	R1-2						14.00		
	21	R1-2, R6-1L						14.00		
	22	R2-1, S5-2			16.13				3@2'-4"	0.13
	23	W8-13 (2)			15.47				2@2'-7"	0.13
TOTAL THIS BLOCK			LIN. FT.	LIN. FT.	LIN. FT.	LIN. FT.	LIN. FT.	LIN. FT.	LIN. FT. / POUNDS	CU. YDS.
			32.12	16.34	98.54	0.00	0.00	248.19	41.83 / 163.18	0.89

(1) 2 FLASHING MODULES REQ'D.

(2) (2) MOUNT ON SAME PIPE AS SIGN "N"

NOTE: VERIFY ALL POST LENGTHS IN THE FIELD PRIOR TO ORDERING MATERIAL.

STANDARD ROADSIDE SIGN ASSEMBLIES REQUIRED

SHEET NUMBER	CODE LETTER THIS SHEET	STANDARD ROADSIDE SIGNS TO BE MOUNTED	STANDARD PIPE 3"	STANDARD PIPE 3½"	STANDARD PIPE 4"	STANDARD PIPE 5"	U-SECTION POST 2-P	U-SECTION POST 3-P	STRUCTURAL BARS 7/16"x2-1/2"	FOOTING CLASS "B" CONCRETE
PSP-12	1	OM-3L						12.00		
	2	OM-3R						12.00		
	3	W8-13 (2)			15.47				2@2'-7"	0.13
	4	R1-2, R6-1L						14.00		
	5	R6-1L,R1-1,R6-1R, R6-3			18.00				2@2'-6"	0.13
	6	W3-1a			15.47				2@2'-7"	0.13
	7	W9-1L	13.98							
	8	R5-1a						2@14.00		
	9	R2-1						2@14.63		
	10	OM-3R						12.00		
	11	OM-3L						12.00		
	12	R5-1a						2@14.00		
	13	W3-1a			15.47				2@2'-7"	0.13
	14	R6-1L,R1-1,R6-1R, R6-3			18.00				2@2'-6"	0.13
	15	R1-2, R6-1L						14.00		
	16	R5-1						14.13		
	17	W9-2	13.98							
	18	W4-2L			15.47				2@2'-7"	0.13
	19	R2-1						2@14.63		
	20	W6-2			15.47				2@2'-7"	0.13
PSP-13	1	R4-7			16.13				3@2'-6"	0.13
	2	W6-1			15.47				2@2'-7"	0.13
	3	W6-3, R5-1			13.90				2@2'-5" 2@2'-10"	0.13
	4	W6-3			15.47				2@2'-7"	0.13
	M	UNION COUNTY			16.00		2@3'-6"		2@1'	0.33
	N	PONTOTOC COUNTY			16.00		2@4'-0"		2@1'	0.33
	G	ECRU			(2)		2@3'-0"		2@1'	
TOTAL THIS BLOCK			LIN. FT.	LIN. FT.	LIN. FT.	LIN. FT.	LIN. FT.	LIN. FT.	LIN. FT. / POUNDS	CU. YDS.
			27.96	0.00	206.32	0.00	21.00	204.65	70.17 / 261.17	2.09

(1) (2) (2)

PROJECT TOTAL	STANDARD PIPE 3"	STANDARD PIPE 3½"	STANDARD PIPE 4"	STANDARD PIPE 5"	U-SECTION POST 2-P	U-SECTION POST 3-P	STRUCTURAL BARS 7/16"x2-1/2"	FOOTING CLASS "B" CONCRETE
	LIN. FT.	LIN. FT.	LIN. FT.	LIN. FT.	LIN. FT.	LIN. FT.	LIN. FT. / POUNDS	CU. YDS.
	238.32	46.81	1227.93	0.00	153.50	2231.04	454.35 / 1691.09	13.30

(1) (2)

DATE	REVISION	BY
3/7/18	REVISE SIGN AND POST & ADJUST QUAN	WCJ
1-22-18	REVISED QUANTITIES	WCJ

MISSISSIPPI DEPARTMENT OF TRANSPORTATION

STANDARD ROADSIDE

SIGN QUANTITIES

COUNTY: PONTOTOC

PROJ. NUM.: STP-0022-04(063)

FILENAME: EQ-SRS.DGN

DESIGN TEAM _____ CHECKED _____ DATE _____

WORKING NUMBER SRS-6

SHEET NUMBER 43

PLAN
ROADWAY DESIGN DIVISION
MISSISSIPPI DEPARTMENT OF TRANSPORTATION

3/9/2018 8:00:36 AM EQ-SRS.DGN

FMS CON: 102607/303000

ADDENDUM

STATE	PROJECT NO.
MISS.	STP-0022-04(063)

REVISIONS		
	DATE	BY
1	3/6/18	DSP

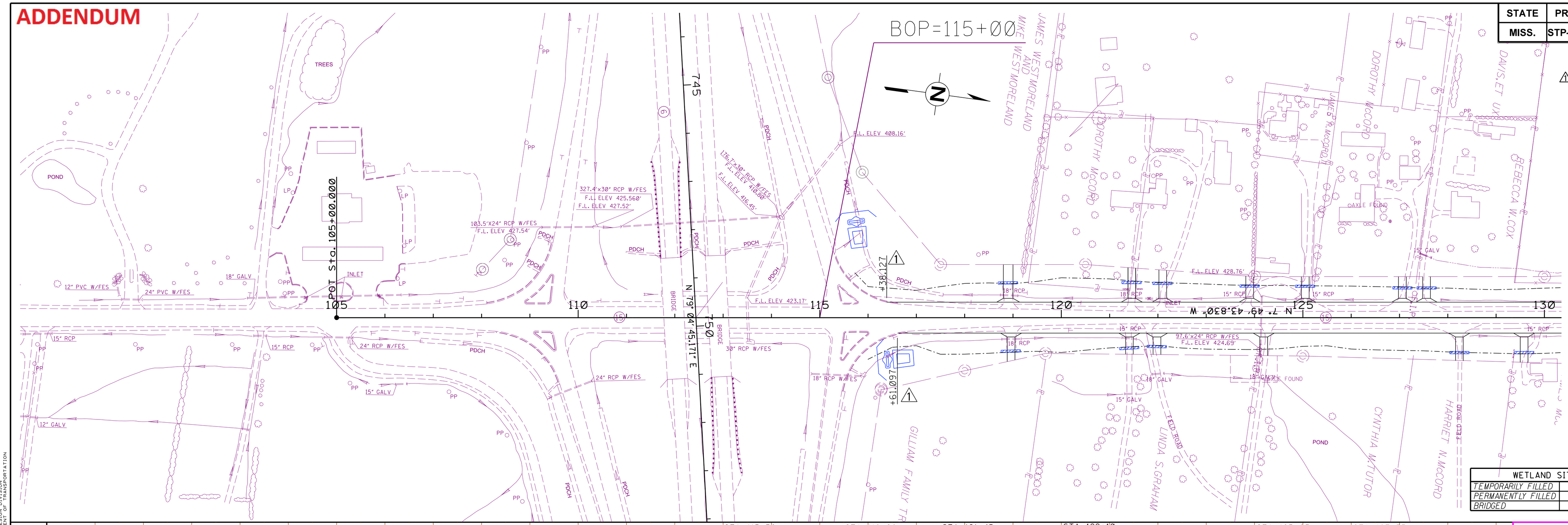

WETLAND SITE		
TEMPORARILY FILLED	0	AC.
PERMANENTLY FILLED	0	AC.
BRIDGED	0	AC.

PLAN-PROFILE
ROADWAY DESIGN DIVISION
MISSISSIPPI DEPARTMENT OF TRANSPORTATION

STA. 115+50
TYPE "D" SILT
BASIN REQ'D. LT.
L = 75'
H = 4'

STA. 118+90
RAMP REQ'D. LT
64'-18" PIPE REQ'D.

STA. 121+45
RAMP REQ'D. LT.
64'-18" PIPE REQ'D.

STA. 122+10
RAMP REQ'D. LT
48'-18" PIPE REQ'D.

STA. 123+90
RAMP REQ'D. LT
64'-18" PIPE REQ'D.

STA. 125+05
RAMP REQ'D. LT
64'-18" PIPE REQ'D.

STA. 127+55
RAMP REQ'D. LT
56'-18" PIPE REQ'D.

STA. 127+05
RAMP REQ'D. LT
56'-18" PIPE REQ'D.

UTILITIES:

CITY OF PONTOTOC-GAS
SAMMY JORDAN
662-489-3891

CITY OF PONTOTOC-WATER
662-489-4841

PONTOTOC EPA
662-489-3211

AT&T TELEPHONE

MUD CREEK WATER ASSN.
LYNN ROBBINS
662-489-6851

TOWN OF ECRU- WATER AND SEWER
662-489-3881

NORTH MS HEALTH SERVICES
662-377-3022

INGOMAR WATER SYSTEM
JOHN WEEDEN
662-534-3335

COLUMBIA GULF
662-413-4154

450
440
430
420
410
400

442.00 442.32 442.12 442.10 442.08 441.73 441.38 441.02 440.89 440.97 441.05 440.62 440.19 439.66 439.45 438.84 438.22 437.65 437.14 436.10 435.18 434.51 433.50 432.78 432.44 431.78 431.20 430.81 430.52 430.51 430.40 430.58 430.66 430.81 430.79 431.04 431.18 431.35 431.04 431.38 431.31 431.48 431.59 431.73 431.67 431.99 431.97 432.24 432.18 432.46 432.55 432.67 432.46 432.69 432.38 432.80 432.85 433.13 432.95 433.28 432.93 433.20 433.14 433.38 433.46 433.67 433.79 433.99 433.90 434.11 434.01 434.25 434.34 434.51 434.67 434.80 434.35 434.57 434.03 434.26 433.85 434.15 433.63 434.10 433.29 433.67 432.94 433.23 432.54 432.80 432.14 432.39

100 101 102 103 104 105 106 107 108 109 110 111 112 113 114 115 116 117 118 119 120 121 122 123 124 125 126 127 128 129 130

Wk. Sh. 3LT
Sh. No. 44

3/6/2018 10:02:06 AWK3.DGN

DESIGN TEAM: DOVER | FILENAME: WK3.DGN | COUNTY: PONTOTOC | PROJECT NO.: STP-0022-04(063) | SHEET ID: **HWY. 15 MAINLINE**

FMS CON: 102607/303000

ADDENDUM

STATE	PROJECT NO.
MISS.	STP-0022-04(063)

REVISIONS	
DATE	BY
3/6/18	DSP

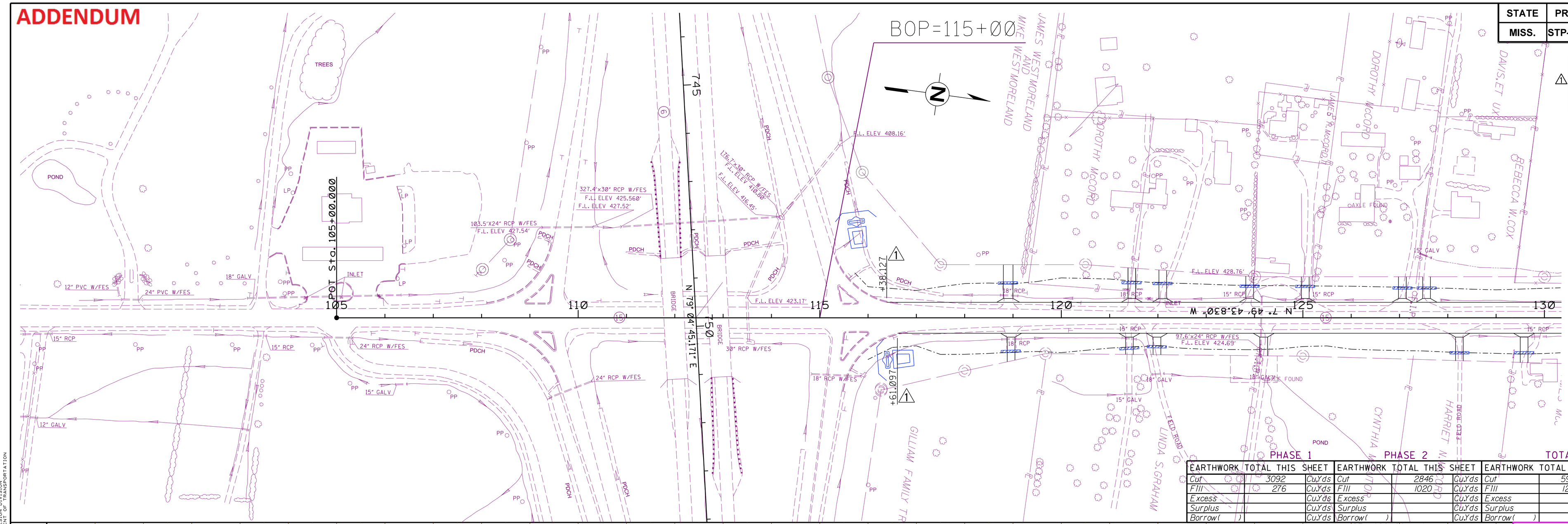

PHASE 1			PHASE 2			TOTAL		
EARTHWORK TOTAL THIS SHEET			EARTHWORK TOTAL THIS SHEET			EARTHWORK TOTAL THIS SHEET		
Cut	3092	CuYds	Cut	2846	CuYds	Cut	5938	CuYds
Fill	276	CuYds	Fill	1020	CuYds	Fill	1296	CuYds
Excess		CuYds	Excess		CuYds	Excess		CuYds
Surplus		CuYds	Surplus		CuYds	Surplus		CuYds
Borrow( )		CuYds	Borrow( )		CuYds	Borrow( )		CuYds

PLAN-PROFILE
ROADWAY DESIGN DIVISION
MISSISSIPPI DEPARTMENT OF TRANSPORTATION

STA. 116+10
TYPE "D" SILT
BASIN REQ'D. RT.
L = 35'
H = 3'

STA. 118+96
RAMP REQ'D. RT
40'-18" PIPE REQ'D.

STA. 121+45
RAMP REQ'D. RT.
40'-18" PIPE REQ'D. RT.

STA 121+98
RAMP REQ'D. RT
40'-18" PIPE REQ'D.

STA 124+20
RAMP REQ'D. RT
DRY.

STA 128+25
RAMP REQ'D. RT
40'-18" PIPE REQ'D.

STA 129+60
RAMP REQ'D. RT
40'-18" PIPE REQ'D.

UTILITIES:

CITY OF PONTOTOC-GAS
SAMMY JORDAN
662-489-3891

CITY OF PONTOTOC-WATER
662-489-4841

PONTOTOC EPA
662-489-3211

AT&T TELEPHONE

MUD CREEK WATER ASSN.
LYNN ROBBINS
662-489-6851

TOWN OF ECRU- WATER AND SEWER
662-489-3881

NORTH MS HEALTH SERVICES
662-377-3022

INGOMAR WATER SYSTEM
JOHN WEEDEN
662-534-3335

COLUMBIA GULF
662-413-4154

3092 (CUT - PHASE 1)
2846 (CUT - PHASE 2)

276 (FILL - PHASE 1)
1020 (FILL - PHASE 2)

450
440
430
420
410
400

442.00 442.32 442.12 442.10 442.08 441.73 441.38 441.02 440.89 440.97 441.05 440.62 440.19 439.66 439.45 438.84 438.22 437.65 437.14 436.10 435.18 434.51 433.50 432.78 432.44 431.78 431.20 430.81 430.52 430.51 430.40 430.58 430.66 430.81 430.79 431.04 431.18 431.35 431.04 431.38 431.31 431.48 431.59 431.73 431.67 431.99 431.97 432.24 432.18 432.46 432.55 432.67 432.46 432.69 432.38 432.80 432.85 433.13 432.95 433.28 432.93 433.20 433.14 433.38 433.46 433.67 433.79 433.99 433.90 434.11 434.01 434.25 434.34 434.51 434.67 434.80 434.35 434.57 434.03 434.26 433.85 434.15 433.63 434.10 433.29 433.67 432.94 433.23 432.54 432.80 432.14 432.39

100 101 102 103 104 105 106 107 108 109 110 111 112 113 114 115 116 117 118 119 120 121 122 123 124 125 126 127 128 129 130

Wk. Sh. 3RT
Sh. No. 45

3/6/2018 10:05:50 AWK3RT.DGN

DESIGN TEAM: DOVER | FILENAME: WK3RT.DGN | COUNTY: PONTOTOC | PROJECT NO.: STP-0022-04(063) | SHEET ID: **HWY. 15 MAINLINE**

FMS CON:102607/303000

STATE	PROJECT NO.
MISS.	STP-0022-04(063)

ADDENDUM

PAVEMENT MARKING EST. QTY.

SYMBOL	DESCRIPTION	QUANTITY
2	TRAFFIC STRIPE (CONT. YELLOW)	4044 L.F. ⚠
3	TRAFFIC STRIPE (SKIP WHITE)	800 L.F.
5	EDGE STRIPE (CONT. WHITE)	3000 L.F.
6	TRAFFIC STRIPE (SKIP YELLOW)	3000 L.F.
9	DETAIL STRIPE (WHITE)	763 L.F. ⚠
12	RED-CLEAR REFLECTIVE RAISED MARKERS	99 EA. ⚠
13	TWO-WAY YELLOW REFLEC. RAISED MARKER	274 EA. ⚠
14	TWO-WAY CLEAR REFLEC. RAISED MARKER	2 EA.
15	LEGEND (WHITE)	258 S.F. ⚠
16	DETAIL STRIPE (YELLOW)	408 L.F. ⚠

•SHOWN ON SHEET - STA. 116+00 TO STA. 133+00

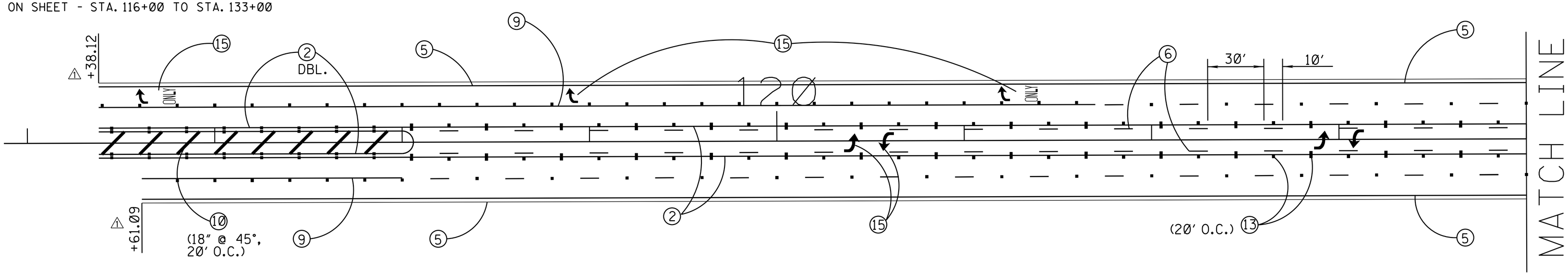

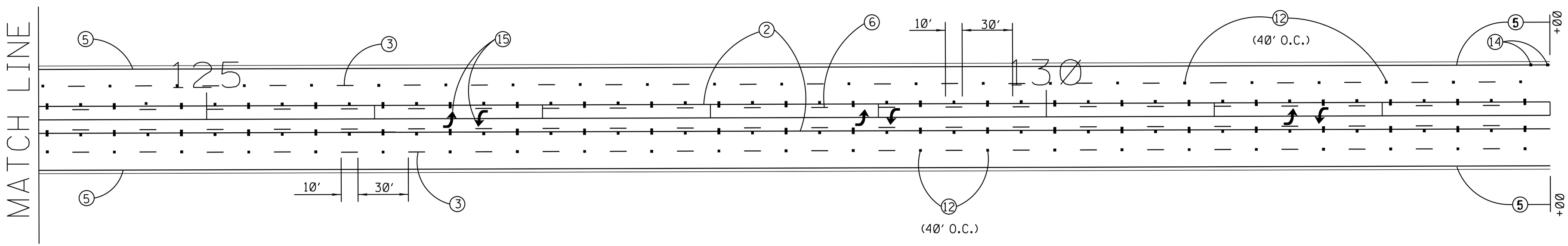

DATE	DSP BY	REVISION
3/6/18		EXTENDED STRIPING

MISSISSIPPI DEPARTMENT OF TRANSPORTATION

PERM. PAV'T. MARKINGS

STA. 118+00 - STA. 133+00

COUNTY: PONTOTOC

PROJ. NO.: STP-0022-04(063)

FILENAME: PAV'TMARKING.DGN

DESIGN TEAM _____ CHECKED _____ DATE _____

WORKING NUMBER PPM-1

SHEET NUMBER 118

PLAN
ROADWAY DESIGN DIVISION
MISSISSIPPI DEPARTMENT OF TRANSPORTATION

3/6/2018 11:14:22 AM PAV'TMARKING.DGN

FMS CON:102607-303000

ADDENDUM

STATE	PROJECT NO.
MISS.	STP-0022-04(063)

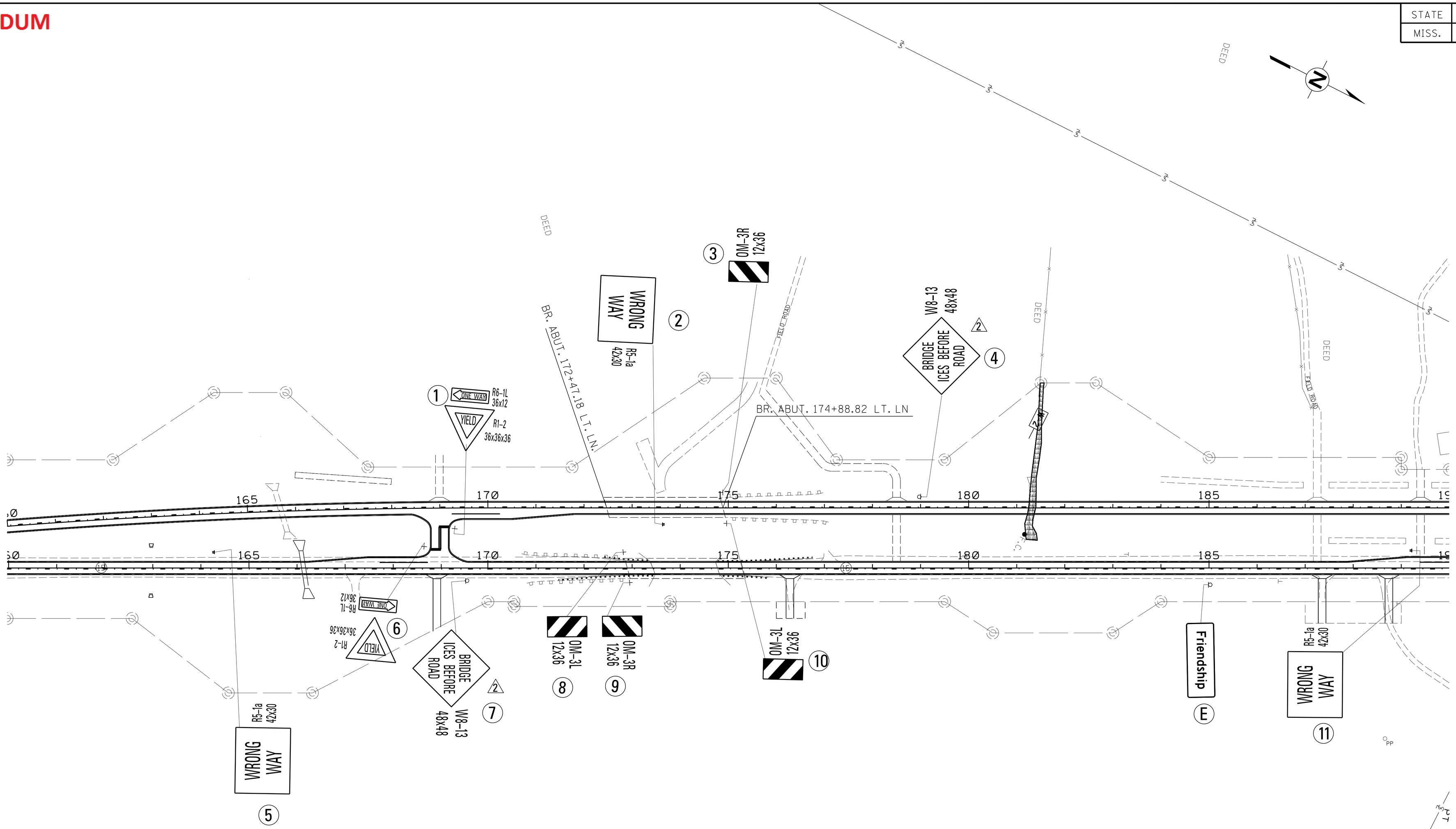

Signs and Supports Legend		
I Single U-Channel Post Sign Faces One Direction	II Double U-Channel Post Sign Faces One Direction	● Pipe Mount Sign Faces One Direction
I Single U-Channel Post Signs Face Two Directions	II Double U-Channel Post Signs Face Two Directions	● Pipe Mount Signs Face Two Directions
Top View Single U-Channel Post		● Top View Pipe Mount

NOTE: Date of Erection shallbe written legibly with a Permanent Black Marker on the back of each sign.

Do Not Scale this Drawing.

Sign locations are to be staked by the Contractor and approved by the Project Engineer prior to erection.

DATE	REVISION	BY
3/7/18	REVISE SIGN	WCJ
1-22-18	REVISED SIGNS AND ID NUMBERS	WCJ

MISSISSIPPI DEPARTMENT OF TRANSPORTATION

PERMANENT SIGNING PLAN

MS 15 FROM MS 76

TO UNION COUNTY LINE

COUNTY: PONTOTOC

PROJ. NO.: STP-0022-04(063)

FILENAME: PSP3.DGN

DESIGN TEAM Waggoner CHECKED _____ DATE _____

WORKING NUMBER PSP-3

SHEET NUMBER 1003

PLAN
ROADWAY DESIGN DIVISION
MISSISSIPPI DEPARTMENT OF TRANSPORTATION

3/8/2018 1:27 PM PSP3.DGN

FMS CON:102607-303000

ADDENDUM

STATE	PROJECT NO.
MISS.	STP-0022-04(063)

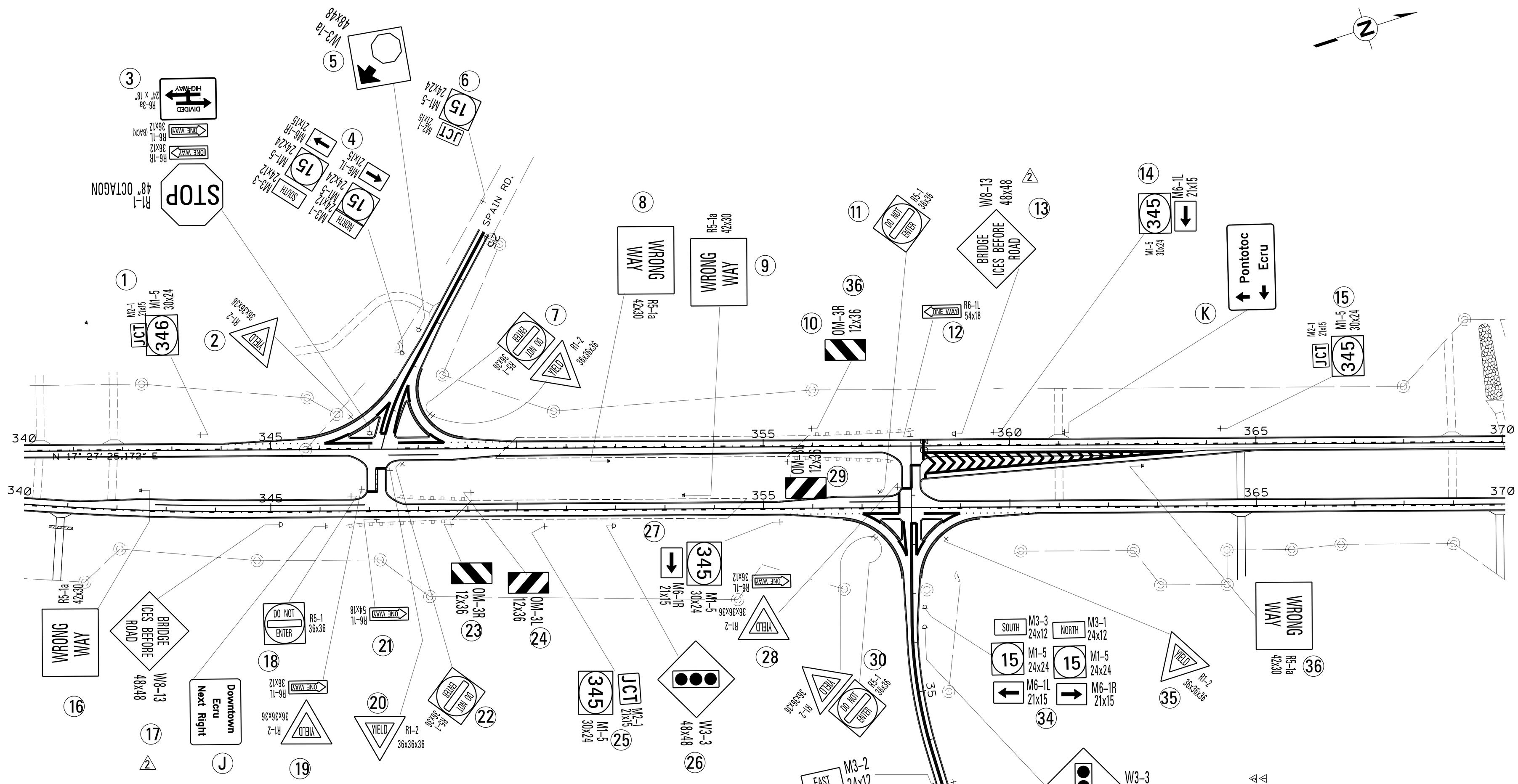

Signs and Supports Legend		
I Single U-Channel Post Sign Faces One Direction	II Double U-Channel Post Sign Faces One Direction	Pipe Mount Sign Faces One Direction
I Single U-Channel Post Signs Face Two Directions	II Double U-Channel Post Signs Face Two Directions	Pipe Mount Signs Face Two Directions
Top View Single U-Channel Post		Top View Pipe Mount

NOTE: Date of Erection shall be written legibly with a Permanent Black Marker on the back of each sign.

Do Not Scale this Drawing.

Sign locations are to be staked by the Contractor and approved by the Project Engineer prior to erection.

W3-1a shall be 500' from stop bar.

R5-1a shall be 450' from nose point.

DATE	REVISION	BY
3/7/18	REVISE SIGN	WCJ
1-22-18	REVISED SIGNS AND ID NUMBERS	WCJ

MISSISSIPPI DEPARTMENT OF TRANSPORTATION

PERMANENT SIGNING PLAN

MS 15 FROM MS 76

TO UNION COUNTY LINE

COUNTY: PONTOTOC

PROJ. NO.: STP-0022-04(063)

FILENAME: PSP9.DGN

DESIGN TEAM Waggoner CHECKED _____ DATE _____

WORKING NUMBER PSP-9

SHEET NUMBER 1009

PLAN
ROADWAY DESIGN DIVISION
MISSISSIPPI DEPARTMENT OF TRANSPORTATION

3/8/2018 1:27 PM PSP9.DGN

FMS CON:102607-303000

ADDENDUM

STATE	PROJECT NO.
MISS.	STP-0022-04(063)

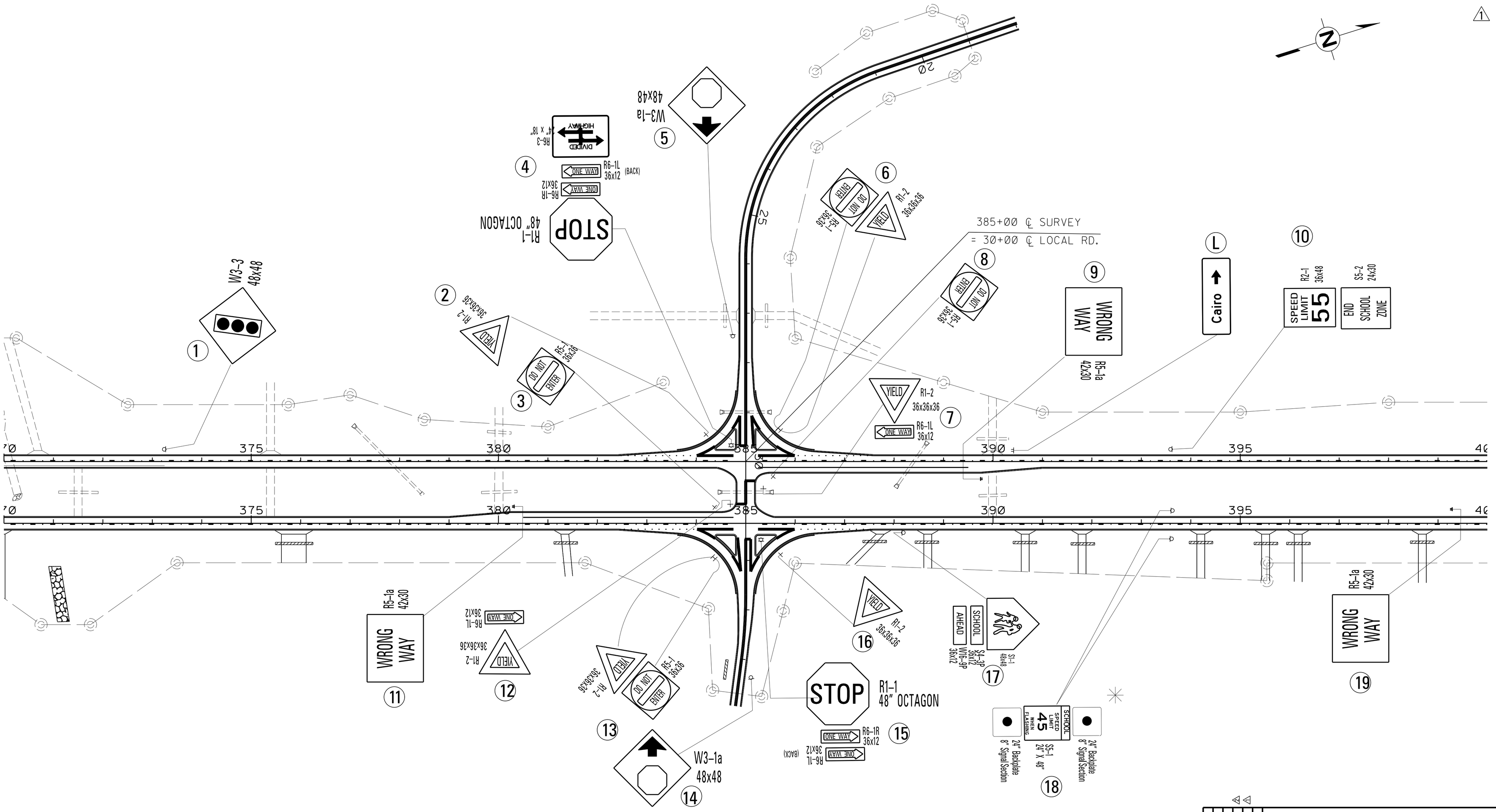

Signs and Supports Legend		
Single U-Channel Post Sign Faces One Direction	Double U-Channel Post Sign Faces One Direction	Pipe Mount Sign Faces One Direction
Single U-Channel Post Signs Face Two Directions	Double U-Channel Post Signs Face Two Directions	Pipe Mount Signs Face Two Directions
Top View Single U-Channel Post		Top View Pipe Mount

NOTE: Date of Erection shall be written legibly with a Permanent Black Marker on the back of each sign.

Do Not Scale this Drawing.

Sign locations are to be staked by the Contractor and approved by the Project Engineer prior to erection.

W3-1a shall be 500' from stop bar.

R5-1a shall be 450' from nose point.

✳ NOTE: Solar Powered School zone (replace with new). Refer to RSP-20 for sign layout and to the Ms. Standard Specifications for road and bridge construction, Section 638.02 and 638.03 for solar battery unit details.

DATE	REVISION	BY
3/7/18	REVISED NOTE	W.C.J.
1-22-18	REVISED SIGNS AND ID NUMBERS	W.C.J.

MISSISSIPPI DEPARTMENT OF TRANSPORTATION

PERMANENT SIGNING PLAN

MS 15 FROM MS 76

TO UNION COUNTY LINE

COUNTY: PONTOTOC

PROJ. NO.: STP-0022-04(063)

FILENAME: PSP10.DGN

DESIGN TEAM Waggoner CHECKED _____ DATE _____

WORKING NUMBER PSP-10

SHEET NUMBER 1010

PLAN
ROADWAY DESIGN DIVISION
MISSISSIPPI DEPARTMENT OF TRANSPORTATION

3/8/2018 1:27 PM PSP10.DGN

FMS CON:102607-303000

ADDENDUM

STATE	PROJECT NO.
MISS.	STP-0022-04(063)

NOTE: Solar Powered Schoolzone (replace with new).
Refer to RSP-20 for sign layout and to
the Ms. Standard Specifications for road and bridge
construction, Section 638.02 and 638.03
for solar battery unit details.

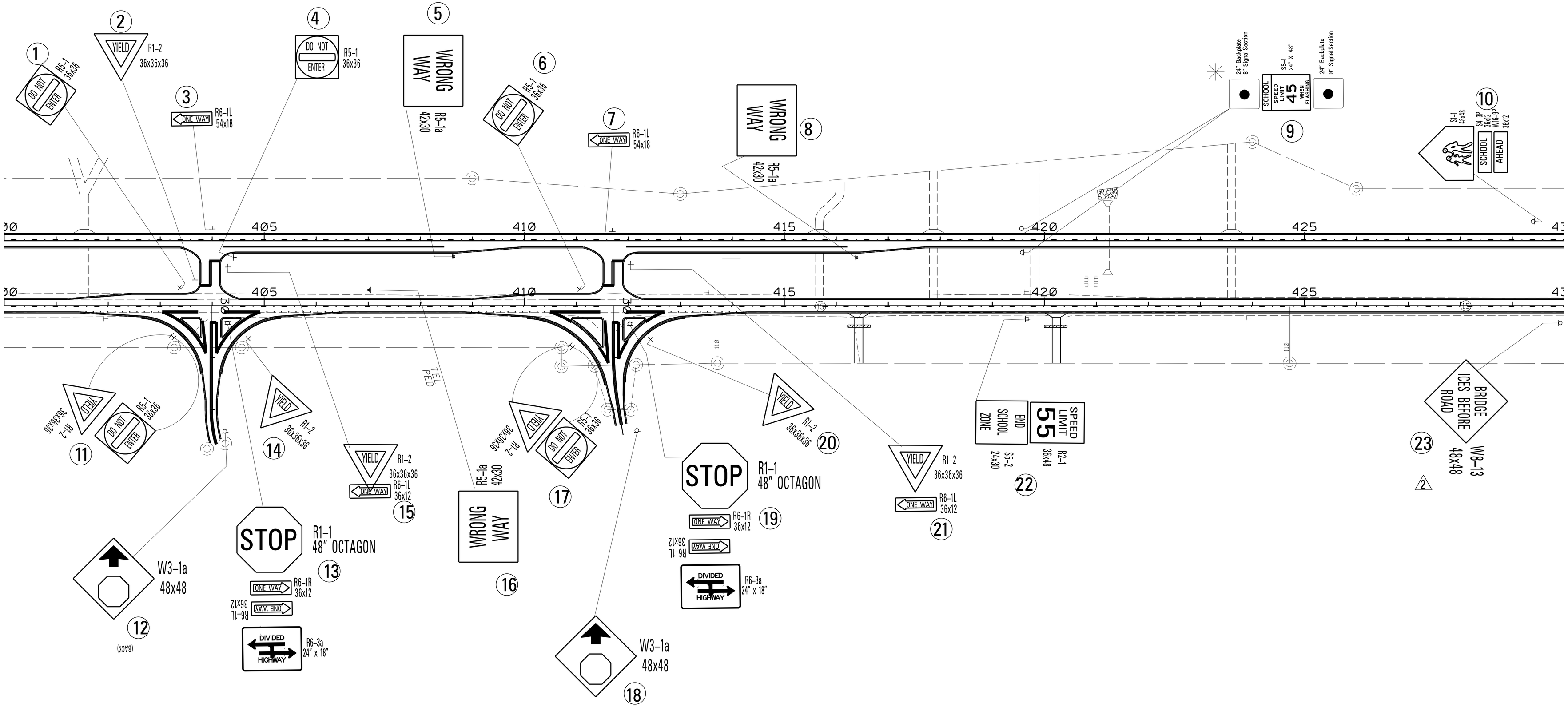

Signs and Supports Legend		
Single U-Channel Post Sign Faces One Direction	Double U-Channel Post Sign Faces One Direction	Pipe Mount Sign Faces One Direction
Single U-Channel Post Signs Face Two Directions	Double U-Channel Post Signs Face Two Directions	Pipe Mount Signs Face Two Directions
Top View Single U-Channel Post		Top View Pipe Mount

NOTE: Date of Erection shall be written
legibly with a Permanent Black Marker
on the back of each sign.

Do Not Scale this Drawing.

Sign locations are to be staked by the Contractor
and approved by the Project Engineer prior to erection.

W3-1a shall be 500' from stop bar.

R5-1a shall be 450' from nose point.

DATE	REVISION	BY
3/7/18	REVISED NOTE	WCJ
1-22-18	REVISED SIGNS AND ID NUMBERS	WCJ

MISSISSIPPI DEPARTMENT OF TRANSPORTATION

PERMANENT SIGNING PLAN

MS 15 FROM MS 76

TO UNION COUNTY LINE

COUNTY: PONTOTOC

PROJ. NO.: STP-0022-04(063)

FILENAME: PSP11.DGN

DESIGN TEAM Waggoner CHECKED _____ DATE _____

WORKING NUMBER PSP-11

SHEET NUMBER 1011

PLAN
ROADWAY DESIGN DIVISION
MISSISSIPPI DEPARTMENT OF TRANSPORTATION

3/8/2018 1:27 PM PSP11.DGN

FMS CON:102607-303000

ADDENDUM

STATE	PROJECT NO.
MISS.	STP-0022-04(063)

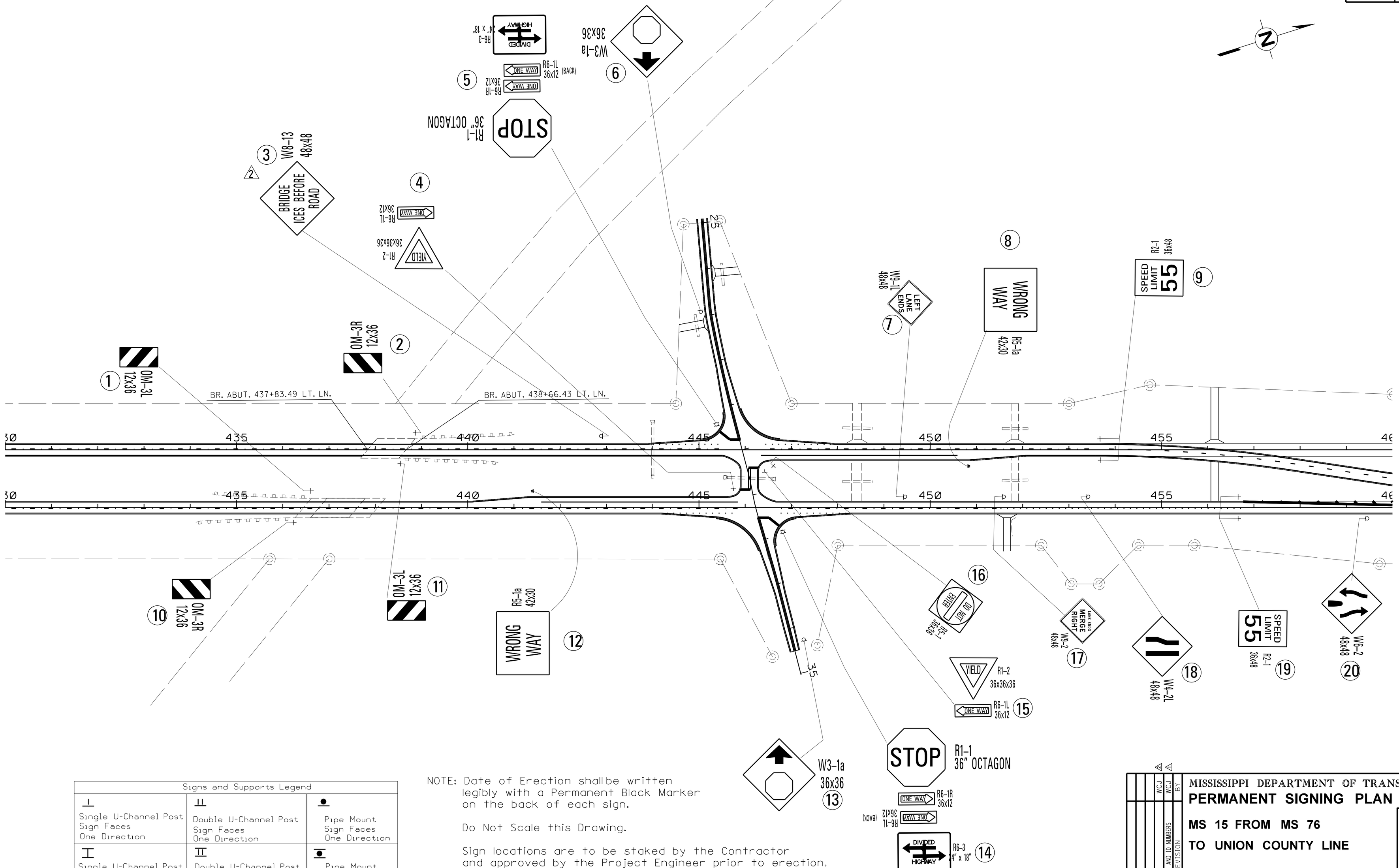

Signs and Supports Legend		
Single U-Channel Post Sign Faces One Direction	Double U-Channel Post Sign Faces One Direction	Pipe Mount Sign Faces One Direction
Single U-Channel Post Signs Face Two Directions	Double U-Channel Post Signs Face Two Directions	Pipe Mount Signs Face Two Directions
Top View Single U-Channel Post		Top View Pipe Mount

NOTE: Date of Erection shall be written legibly with a Permanent Black Marker on the back of each sign.

Do Not Scale this Drawing.

Sign locations are to be staked by the Contractor and approved by the Project Engineer prior to erection.

W3-1a shall be 500' from stop bar.

R5-1a shall be 450' from nose point.

DATE	REVISION	BY
3/7/18	REVISE SIGN	WCJ
1-22-18	REVISED SIGNS AND ID NUMBERS	WCJ

MISSISSIPPI DEPARTMENT OF TRANSPORTATION

PERMANENT SIGNING PLAN

MS 15 FROM MS 76

TO UNION COUNTY LINE

COUNTY: PONTOTOC

PROJ. NO.: STP-0022-04(063)

FILENAME: PSP12.DGN

DESIGN TEAM Waggoner CHECKED _____ DATE _____

WORKING NUMBER PSP-12

SHEET NUMBER 1012

PLAN
ROADWAY DESIGN DIVISION
MISSISSIPPI DEPARTMENT OF TRANSPORTATION

3/8/2018 1:27 PM PSP12.DGN

FMS CON:102607-303000

STATE	PROJECT NO.
MISS.	STP-0022-04(063)

ADDENDUM

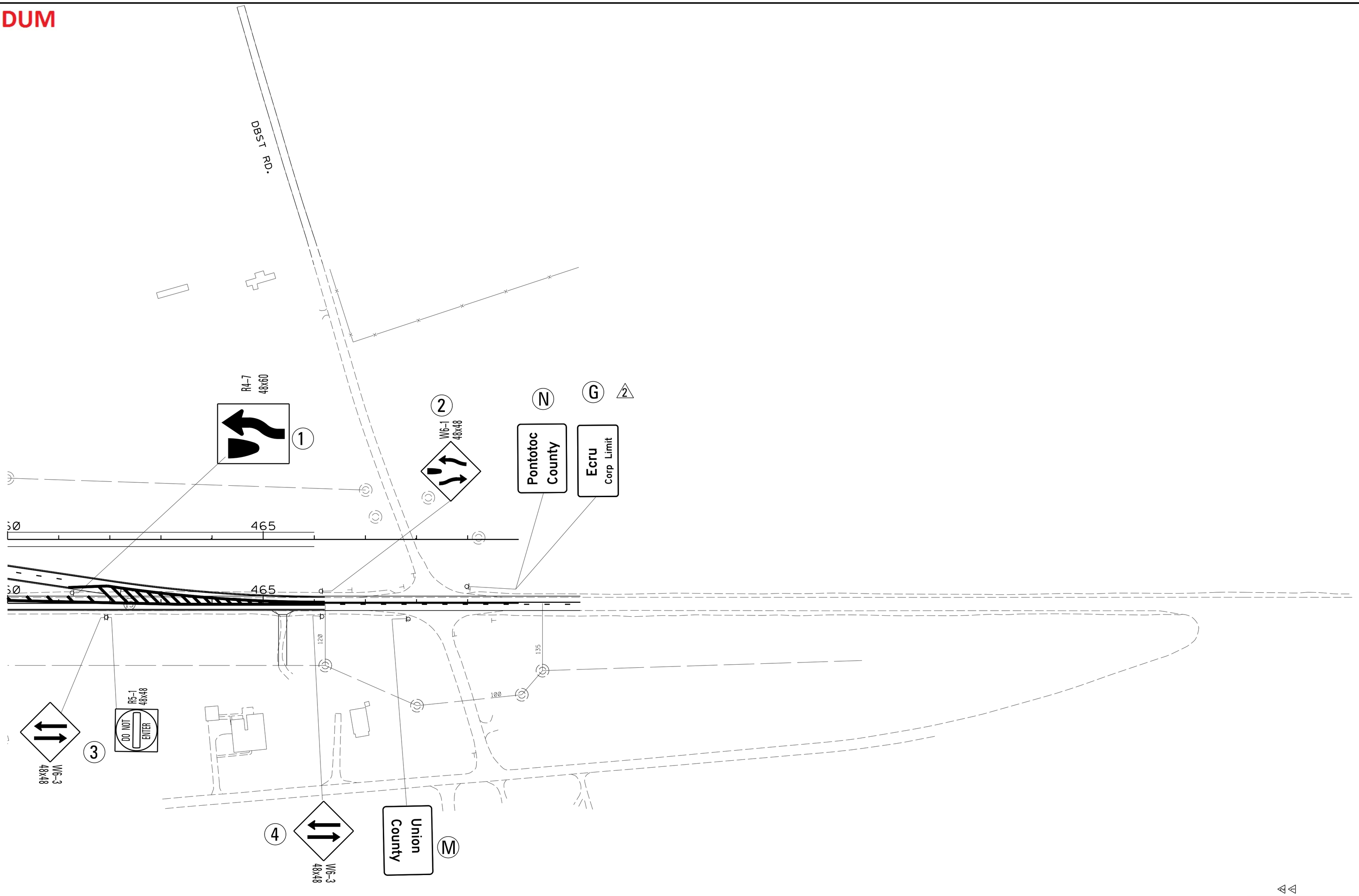

Signs and Supports Legend		
Single U-Channel Post Sign Faces One Direction	Double U-Channel Post Sign Faces One Direction	Pipe Mount Sign Faces One Direction
Single U-Channel Post Signs Face Two Directions	Double U-Channel Post Signs Face Two Directions	Pipe Mount Signs Face Two Directions
Top View Single U-Channel Post		Top View Pipe Mount

NOTE: Date of Erection shall be written legibly with a Permanent Black Marker on the back of each sign.

Do Not Scale this Drawing.

Sign locations are to be staked by the Contractor and approved by the Project Engineer prior to erection.

DATE	REVISION	BY
3/7/18	RELOCATE SIGNS	W.C.J
1-22-18	REVISED SIGNS AND ID NUMBERS	W.C.J

MISSISSIPPI DEPARTMENT OF TRANSPORTATION

PERMANENT SIGNING PLAN

MS 15 FROM MS 76

TO UNION COUNTY LINE

COUNTY: PONTOTOC

PROJ. NO.: STP-0022-04(063)

WORKING NUMBER PSP-13

FILENAME: PSP13.DGN

DESIGN TEAM Waggoner CHECKED _____ DATE _____

SHEET NUMBER 1013

PLAN
ROADWAY DESIGN DIVISION
MISSISSIPPI DEPARTMENT OF TRANSPORTATION

3/8/2018 1:27 PM PSP13.DGN

FMS CON:102607-303000

STATE	PROJECT NO.
MISS.	STP-0022-04(063)

ADDENDUM

1 LEGEND

- BASE MOUNTED OR POLE MOUNTED CABINET FOR SIGNAL CONTROLLER
- POLE REQUIRED
- TYPE 1 PULLBOX REQUIRED
- TYPE 2 PULLBOX REQUIRED
- TYPE 3 PULLBOX REQUIRED
- SIGNAL HEAD REQUIRED / TYPE
- OPTICOM EMITTER
- SIGN
- RADIO INTERCONNECT ANTENNA
- VEHICLE DETECTOR NUMBER
- MULTISENSOR/CAMERA
- RADAR DETECTION ZONE
- CONDUIT (ROLLED PIPE)
- CONDUIT (PVC)
- S.C. SHIELDED CABLE
- 4c NUMBER OF CONDUCTORS
- I.C. INTERCONNECT CABLE
- POW POWER CABLE (2c/8)
- LUM LUMINAIRE POWER CABLE (2c/10)
- VDC VIDEO CABLE
- RADAR DETECTION SENSOR
- RDC RADAR DETECTION CABLE
- OC OPTICOM CABLE
- RDS MULTISENSOR/CAMERA CABLE

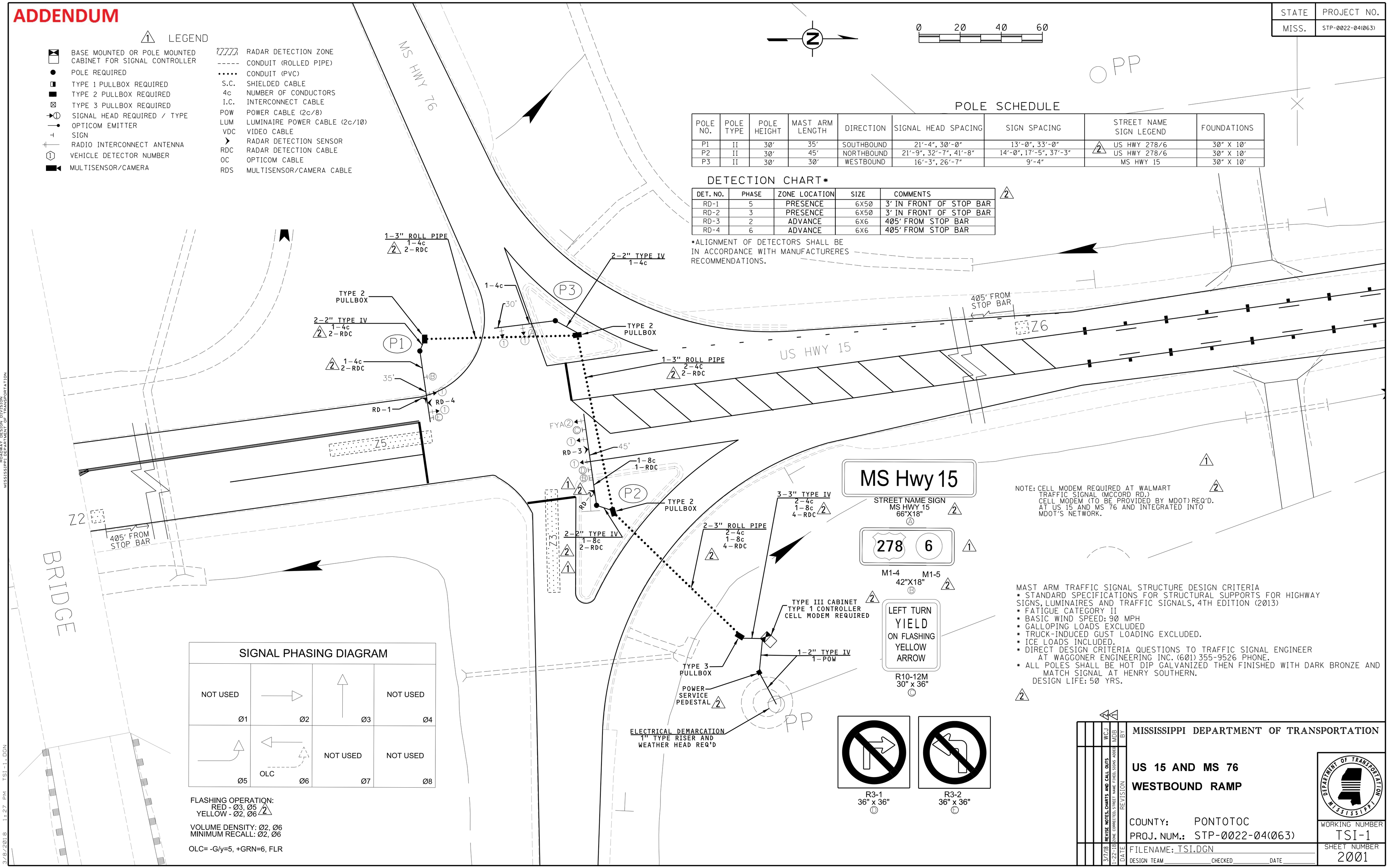

POLE SCHEDULE

POLE NO.	POLE TYPE	POLE HEIGHT	MAST ARM LENGTH	DIRECTION	SIGNAL HEAD SPACING	SIGN SPACING	STREET NAME SIGN LEGEND	FOUNDATIONS
P1	II	30'	35'	SOUTHBOUND	21'-4", 30'-0"	13'-0", 33'-0"	2 US HWY 278/6	30" X 10'
P2	II	30'	45'	NORTHBOUND	21'-9", 32'-7", 41'-8"	14'-0", 17'-5", 37'-3"	US HWY 278/6	30" X 10'
P3	II	30'	30'	WESTBOUND	16'-3", 26'-7"	9'-4"	MS HWY 15	30" X 10'

DETECTION CHART*

2

DET. NO.	PHASE	ZONE LOCATION	SIZE	COMMENTS
RD-1	5	PRESENCE	6X50	3' IN FRONT OF STOP BAR
RD-2	3	PRESENCE	6X50	3' IN FRONT OF STOP BAR
RD-3	2	ADVANCE	6X6	405' FROM STOP BAR
RD-4	6	ADVANCE	6X6	405' FROM STOP BAR

*ALIGNMENT OF DETECTORS SHALL BE IN ACCORDANCE WITH MANUFACTURERES RECOMMENDATIONS.

NOTE: CELL MODEM REQUIRED AT WALMART TRAFFIC SIGNAL (MCCORD RD.) CELL MODEM (TO BE PROVIDED BY MDOT) REQ'D. AT US 15 AND MS 76 AND INTEGRATED INTO MDOT'S NETWORK. 1 2

MAST ARM TRAFFIC SIGNAL STRUCTURE DESIGN CRITERIA
- STANDARD SPECIFICATIONS FOR STRUCTURAL SUPPORTS FOR HIGHWAY SIGNS, LUMINAIRES AND TRAFFIC SIGNALS, 4TH EDITION (2013)
- FATIGUE CATEGORY II
- BASIC WIND SPEED: 90 MPH
- GALLOPING LOADS EXCLUDED
- TRUCK-INDUCED GUST LOADING EXCLUDED.
- ICE LOADS INCLUDED.
- DIRECT DESIGN CRITERIA QUESTIONS TO TRAFFIC SIGNAL ENGINEER AT WAGGONER ENGINEERING INC. (601) 355-9526 PHONE.
- ALL POLES SHALL BE HOT DIP GALVANIZED THEN FINISHED WITH DARK BRONZE AND MATCH SIGNAL AT HENRY SOUTHERN.

DESIGN LIFE: 50 YRS.

2

SIGNAL PHASING DIAGRAM

NOT USED Ø1	Ø2	Ø3	NOT USED Ø4
Ø5	OLC Ø6	NOT USED Ø7	NOT USED Ø8

FLASHING OPERATION:
RED - Ø3, Ø5 2
YELLOW - Ø2, Ø6

VOLUME DENSITY: Ø2, Ø6
MINIMUM RECALL: Ø2, Ø6

OLC= -G/y=5, +GRN=6, FLR

DATE	REVISION	BY
3/7/18	REVISE NOTES, CHARTS AND CALL OUTS	WCJ
1-22-18	CONE CORRECTED, STREET NAME, FIXED, SIGNS ADDED	MDB

MISSISSIPPI DEPARTMENT OF TRANSPORTATION

US 15 AND MS 76
WESTBOUND RAMP

COUNTY: PONTOTOC
PROJ. NUM.: STP-0022-04(063)

FILENAME: TSI.DGN
DESIGN TEAM ____ CHECKED ____ DATE ____

WORKING NUMBER TSI-1
SHEET NUMBER 2001

PLAN
ROADWAY DESIGN DIVISION
MISSISSIPPI DEPARTMENT OF TRANSPORTATION

3/8/2018 1:27 PM TSI-1.DGN

FMS CON:102607-303000

STATE	PROJECT NO.
MISS.	STP-0022-04(063)

ADDENDUM

MAST ARM TRAFFIC SIGNAL STRUCTURE DESIGN CRITERIA
* STANDARD SPECIFICATIONS FOR STRUCTURAL SUPPORTS FOR HIGHWAY SIGNS, LUMINAIRES AND TRAFFIC SIGNALS, 4TH EDITION (2013)
* FATIGUE CATEGORY II
* BASIC WIND SPEED: 90 MPH
* GALLOPING LOADS EXCLUDED
* TRUCK-INDUCED GUST LOADING EXCLUDED.
* DIRECT DESIGN CRITERIA QUESTIONS TO TRAFFIC SIGNAL ENGINEER AT WAGGONER ENGINEERING INC. (601) 941-6305 PHONE.
* ALL POLES SHALL BE HOT DIP GALVANIZED THEN FINISHED WITH DARK BRONZE. DESIGN LIFE: 50 YRS.
* STRAIGHT MAST ARMS ARE REQUIRED.
* ICE LOADS INCLUDED.

0 20 40 60

LEGEND

- BASE MOUNTED OR POLE MOUNTED CABINET FOR SIGNAL CONTROLLER
- POLE REQUIRED
- TYPE 1 PULLBOX REQUIRED
- TYPE 2 PULLBOX REQUIRED
- TYPE 3 PULLBOX REQUIRED
- SIGNAL HEAD REQUIRED / TYPE
- OPTICOM EMITTER
- SIGN
- RADIO INTERCONNECT ANTENNA
- VEHICLE DETECTOR NUMBER
- MULTISENSOR/CAMERA
- RADAR DETECTION ZONE
- CONDUIT (ROLLED PIPE)
- CONDUIT (PVC)
- SHIELDED CABLE
- 4c NUMBER OF CONDUCTORS
- I.C. INTERCONNECT CABLE
- POW POWER CABLE (2c/8)
- LUM LUMINAIRE POWER CABLE (2c/10)
- VDC VIDEO CABLE
- RADAR DETECTION SENSOR
- RDC RADAR DETECTION CABLE
- OC OPTICOM CABLE
- RDS MULTISENSOR/CAMERA CABLE

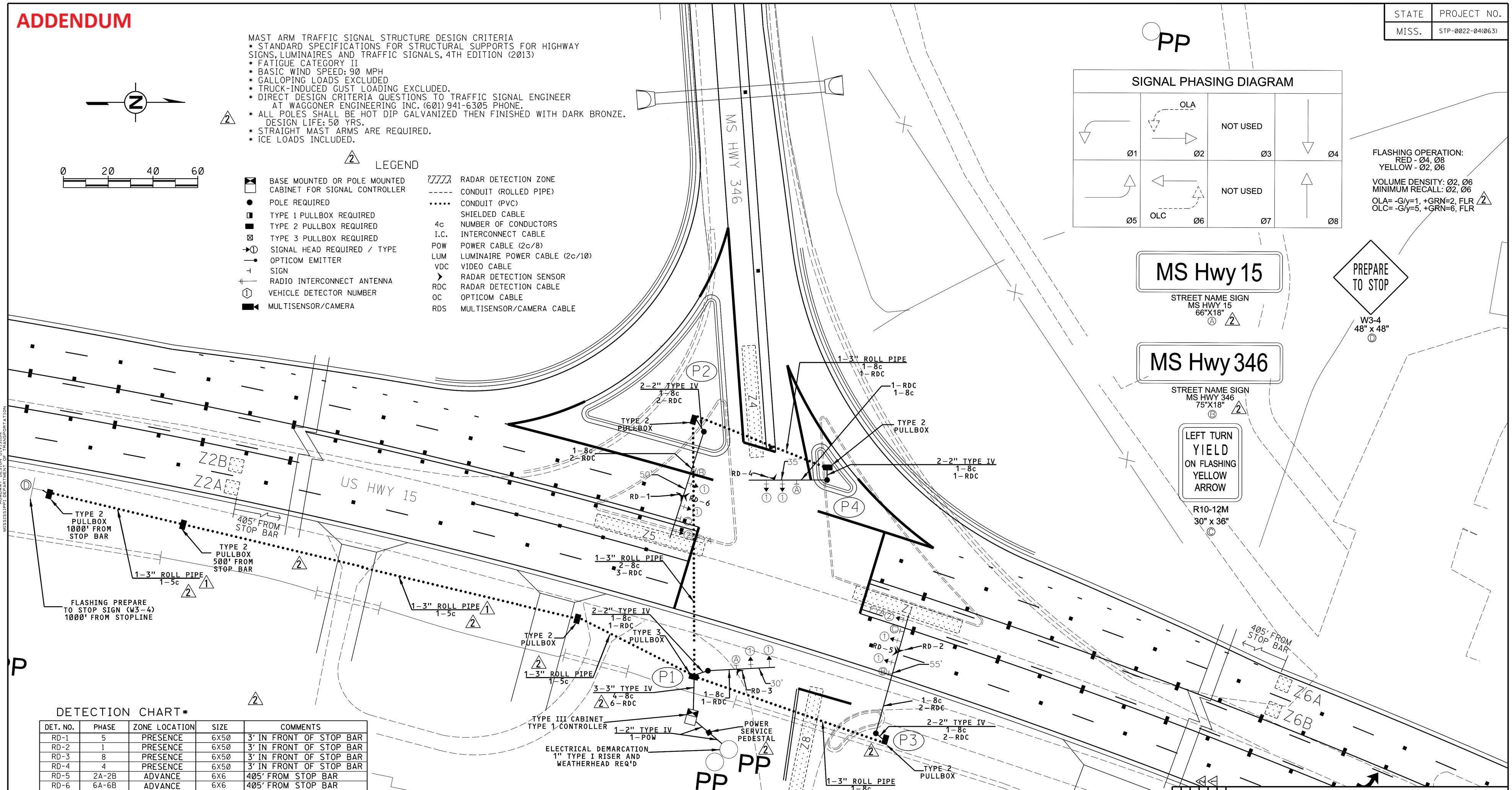

SIGNAL PHASING DIAGRAM

Ø1	Ø2	Ø3	Ø4
	OLA	NOT USED	
Ø5	Ø6	Ø7	Ø8
	OLC	NOT USED	

FLASHING OPERATION:
RED - Ø4, Ø8
YELLOW - Ø2, Ø6

VOLUME DENSITY: Ø2, Ø6
MINIMUM RECALL: Ø2, Ø6

OLA= -G/y=1, +GRN=2, FLR
OLC= -G/y=5, +GRN=6, FLR

MS Hwy 15

STREET NAME SIGN
MS HWY 15
66"X18"

MS Hwy 346

STREET NAME SIGN
MS HWY 346
75"X18"

PREPARE TO STOP

W3-4
48" x 48"

LEFT TURN
YIELD
ON FLASHING
YELLOW
ARROW

R10-12M
30" x 36"

DETECTION CHART*

DET. NO.	PHASE	ZONE LOCATION	SIZE	COMMENTS
RD-1	5	PRESENCE	6X50	3' IN FRONT OF STOP BAR
RD-2	1	PRESENCE	6X50	3' IN FRONT OF STOP BAR
RD-3	8	PRESENCE	6X50	3' IN FRONT OF STOP BAR
RD-4	4	PRESENCE	6X50	3' IN FRONT OF STOP BAR
RD-5	2A-2B	ADVANCE	6X6	405' FROM STOP BAR
RD-6	6A-6B	ADVANCE	6X6	405' FROM STOP BAR

*ALIGNMENT OF DETECTORS SHALL BE IN ACCORDANCE WITH MANUFACTURERES RECOMMENDATIONS.

NOTE: EXISTING SIGNAL TO BE FULLY OPERATIONAL UNTIL NEW SIGNAL IS IN SERVICE

NOTE: CELL MODEM AND INTERGRATE INTO MDOT'S NETWORK.

POLE SCHEDULE

POLE NO.	POLE TYPE	POLE HEIGHT	MAST ARM LENGTH	DIRECTION	SIGNAL HEAD SPACING	SIGN SPACING	STREET NAME SIGN LEGEND	FOUNDATIONS
P1	II	22'	30'	EASTBOUND	19'-3", 27'-7"	12'-9"	MS HWY 15	30" X 10'
P2	II	22'	50'	SOUTHBOUND	24'-0", 34'-7", 46'-4"	17'-7", 40'-3"	MS HWY 346	36" X 12'
P3	II	22'	55'	NORTHBOUND	32'-6", 42'-6", 52'-1"	27'-6", 47'-0"	MS HWY 346	36" X 12'
P4	II	22'	35'	WESTBOUND	20'-0", 27'-2"	13'-6"	MS HWY 15	30" X 10'

DATE	REVISION	BY
3/7/18	REVISE VARIOUS NOTE, CHARTS AND CAL.	DWCSJ
1-22-18	CONDUIT TYPE CHANGED	MDB

MISSISSIPPI DEPARTMENT OF TRANSPORTATION

US 15 AND MS 346

COUNTY: PONTOTOC
PROJ. NUM.: STP-0022-04(063)

FILENAME: TSI.DGN
DESIGN TEAM _____ CHECKED _____ DATE _____

WORKING NUMBER TSI-2
SHEET NUMBER 2002

PLAN
ROADWAY DESIGN DIVISION
MISSISSIPPI DEPARTMENT OF TRANSPORTATION

3/8/2018 1:27 PM TSI-2.DGN

FMS CON:102607-303000

ADDENDUM

STATE	PROJECT NO.
MISS.	STP-0022-04(063)

1 LEGEND

- BASE MOUNTED OR POLE MOUNTED CABINET FOR SIGNAL CONTROLLER
- POLE REQUIRED
- TYPE 1 PULLBOX REQUIRED
- TYPE 2 PULLBOX REQUIRED
- TYPE 3 PULLBOX REQUIRED
- SIGNAL HEAD REQUIRED / TYPE
- OPTICOM EMITTER
- SIGN
- RADIO INTERCONNECT ANTENNA
- VEHICLE DETECTOR NUMBER
- MULTISENSOR/CAMERA
- RADAR DETECTION ZONE
- CONDUIT (ROLLED PIPE)
- CONDUIT (PVC)
- SHIELDED CABLE
- 4c NUMBER OF CONDUCTORS
- I.C. INTERCONNECT CABLE
- POW POWER CABLE (2c/8)
- LUM
- VDC VIDEO CABLE
- RADAR DETECTION SENSOR
- RDC RADAR DETECTION CABLE
- OC OPTICOM CABLE
- RDS MULTISENSOR/CAMERA CABLE

NOTE: TYPE 1A HEAD SHALL BE OPTICALLY PROGRAMMED VIA LOUVERS

2 POLE SCHEDULE

POLE NO.	POLE TYPE	POLE HEIGHT	MAST ARM LENGTH	DIRECTION	SIGNAL HEAD SPACING	SIGN SPACING	STREET NAME SIGN LEGEND	FOUNDATIONS
P1	II	22'	50'	NORTHBOUND	22'-5", 34'-10", 46'-3"	49'-0"	MS HWY 345	36" X 12'
P2	II	22'	95'	SOUTHBOUND	19'-4", 27'-0", 87'-4"	53'-5", 89'-9"	MS HWY 345	48" X 15'
P3	II	22'	30'	WESTBOUND	16'-0", 25'-0"	9'-4"	US HWY 15	30" X 10'
P4	II	22'	30'	WESTBOUND	20'-0", 28'-0"	7'-0"	US HWY 15	30" X 10' 2

DETECTION CHART*

DET. NO.	PHASE	ZONE LOCATION	SIZE	COMMENTS
RD-1	5	PRESENCE	6X50	3' IN FRONT OF STOP BAR
RD-2	1	PRESENCE	6X50	3' IN FRONT OF STOP BAR
RD-3	3 2	PRESENCE	6X50	3' IN FRONT OF STOP BAR
RD-4	2A-2B	ADVANCE	6X6	405' FROM STOP BAR
RD-5	6A-6B	ADVANCE	6X6	405' FROM STOP BAR

*ALIGNMENT OF DETECTORS SHALL BE IN ACCORDANCE WITH MANUFACTURERES RECOMMENDATIONS.

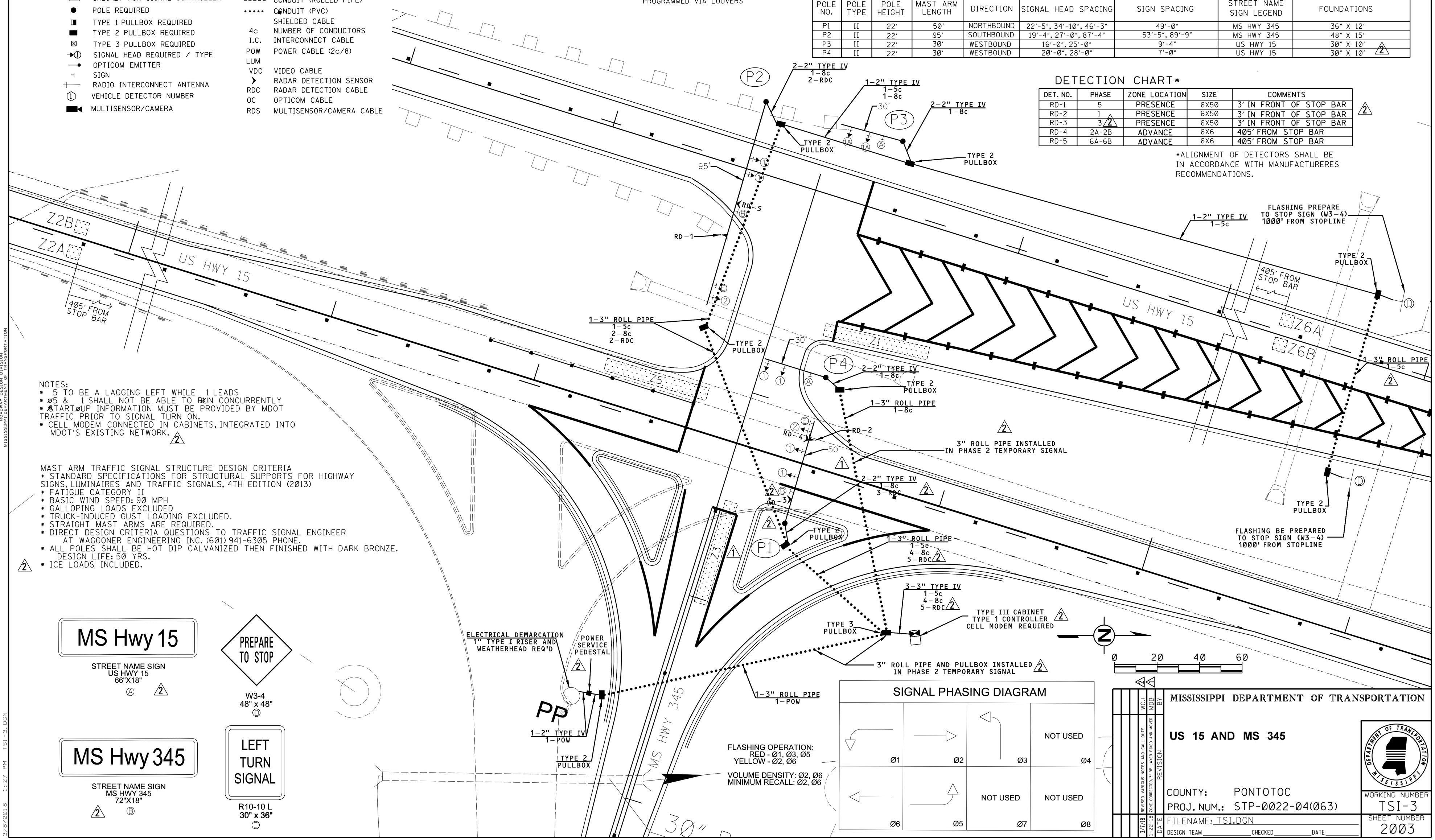

NOTES:
- 5 TO BE A LAGGING LEFT WHILE 1 LEADS
- Ø5 & 1 SHALL NOT BE ABLE TO RUN CONCURRENTLY
- STARTUP INFORMATION MUST BE PROVIDED BY MDOT TRAFFIC PRIOR TO SIGNAL TURN ON.
- CELL MODEM CONNECTED IN CABINETS, INTEGRATED INTO MDOT'S EXISTING NETWORK. 2

MAST ARM TRAFFIC SIGNAL STRUCTURE DESIGN CRITERIA
- STANDARD SPECIFICATIONS FOR STRUCTURAL SUPPORTS FOR HIGHWAY SIGNS, LUMINAIRES AND TRAFFIC SIGNALS, 4TH EDITION (2013)
- FATIGUE CATEGORY II
- BASIC WIND SPEED: 90 MPH
- GALLOPING LOADS EXCLUDED
- TRUCK-INDUCED GUST LOADING EXCLUDED.
- STRAIGHT MAST ARMS ARE REQUIRED.
- DIRECT DESIGN CRITERIA QUESTIONS TO TRAFFIC SIGNAL ENGINEER AT WAGGONER ENGINEERING INC. (601) 941-6305 PHONE.
- ALL POLES SHALL BE HOT DIP GALVANIZED THEN FINISHED WITH DARK BRONZE. DESIGN LIFE: 50 YRS.
- ICE LOADS INCLUDED. 2

MS Hwy 15
STREET NAME SIGN
US HWY 15
66"X18"
A 2

PREPARE TO STOP
W3-4
48" x 48"
D

MS Hwy 345
STREET NAME SIGN
MS HWY 345
72"X18"
B 2

LEFT TURN SIGNAL
R10-10 L
30" x 36"
E

SIGNAL PHASING DIAGRAM

Ø1	Ø2	Ø3	Ø4
		NOT USED	

Ø6	Ø5	Ø7	Ø8
		NOT USED	NOT USED

DATE	REVISION	BY
3/7/18	REVISED VARIOUS NOTES AND CALL OUTS	WCJ
1-22-18	ZONE CORRECTED, P BIP LATER FIXED AND MOVED	MDB

MISSISSIPPI DEPARTMENT OF TRANSPORTATION

US 15 AND MS 345

COUNTY: PONTOTOC

PROJ. NUM.: STP-0022-04(063)

FILENAME: TSI.DGN

DESIGN TEAM _____ CHECKED _____ DATE _____

WORKING NUMBER TSI-3

SHEET NUMBER 2003

PLAN
ROADWAY DESIGN DIVISION
MISSISSIPPI DEPARTMENT OF TRANSPORTATION

3/8/2018 1:27 PM TSI-3.DGN

FMS CON:102607-303000

STATE	PROJECT NO.
MISS.	STP-0022-04(063)

ADDENDUM

LEGEND

- BASE MOUNTED OR POLE MOUNTED CABINET FOR SIGNAL CONTROLLER
- POLE REQUIRED
- TYPE 1 PULLBOX REQUIRED
- TYPE 2 PULLBOX REQUIRED
- TYPE 3 PULLBOX REQUIRED
- SIGNAL HEAD REQUIRED / TYPE
- OPTICOM EMITTER
- SIGN
- RADIO INTERCONNECT ANTENNA
- VEHICLE DETECTOR NUMBER
- MULTISENSOR/CAMERA
- RADAR DETECTION ZONE
- CONDUIT (ROLLED PIPE)
- CONDUIT (PVC)
- S.C. SHIELDED CABLE
- 4c NUMBER OF CONDUCTORS
- I.C. INTERCONNECT CABLE
- POW POWER CABLE (2c/8)
- LUM LUMINAIRE POWER CABLE (2c/10)
- VDC VIDEO CABLE
- RADAR DETECTION SENSOR
- RDC RADAR DETECTION CABLE
- OC OPTICOM CABLE
- RDS MULTISENSOR/CAMERA CABLE

0 20 40 60

NOTE:

1. A FULLY OPERABLE TEMPORARY SPAN WIRE SIGNAL SHALL BE ERECTED AND MAINTAINED AT THE INTERSECTION OF US 15 AND MS 346 AS PER THE DIRECTION OF THE ENGINEER. TO BE PAID FOR USING 619-H001 AND SHALL INCLUDE ALL NECESSARY EQUIPMENT FOR A FULLY FUNCTIONAL TRAFFIC SIGNAL (HEADS, CABLE, CONTROLLER, POLE MOUNTED CABINET, SPANWIRE, POLES, CONDUIT, RADAR DETECTION CABLE ETC.) 1
2. ALL TRAFFIC SIGNAL SECTIONS SHALL BE 12" HEADS AND SHALL BE PLACED AS INDICATED ON THE TEMPORARY TRAFFIC SIGNAL PLAN AS DIRECTED BY THE ENGINEER. RELOCATE HEADS TO ANY POSITION ON THE SPAN WIRE AS NECESSARY FOR CONSTRUCTION PHASING.
3. TEMPORARY WOOD POLES (COST ABSORBED) SHALL BE A MINIMUM OF CLASS 3 AND LONG ENOUGH TO MAINTAIN A MINIMUM VERTICAL CLEARANCE OF 17' TO THE BOTTOM OF THE SIGNAL HEADS AT ALL TIMES.
4. RADAR DETECTORS USED DURING CONSTRUCTION SHALL BE TRANSFERRED TO PERMANENT SIGNAL WHEN CONSTRUCTION IS COMPLETE. PAID FOR BY 641-A002 & NOT INCLUDED IN TEMP. COST. 1
5. RADAR DETECTION SHALL BE ADJUSTED AS NEEDED FOR DIFFERENT PHASES OF CONSTRUCTION
6. SIGNAL HEAD LOCATIONS SHALL BE ADJUSTED ALONG SPANWIRE FOR DIFFERENT PHASES OF CONSTRUCTION.
7. RADAR DETECTOR CABLE IS COST ABSORBED.
8. ALL CABINETS, THEIR INTERNAL COMPONENTS, AND SIGNAL HEADS, THAT ARE REMOVED FROM EXISTING AND TEMPORARY ARE TO BE SALVAGED TO MDOT DISTRICT 1 ONCE PERMANENT INSTALLATION IS COMPLETE. 1

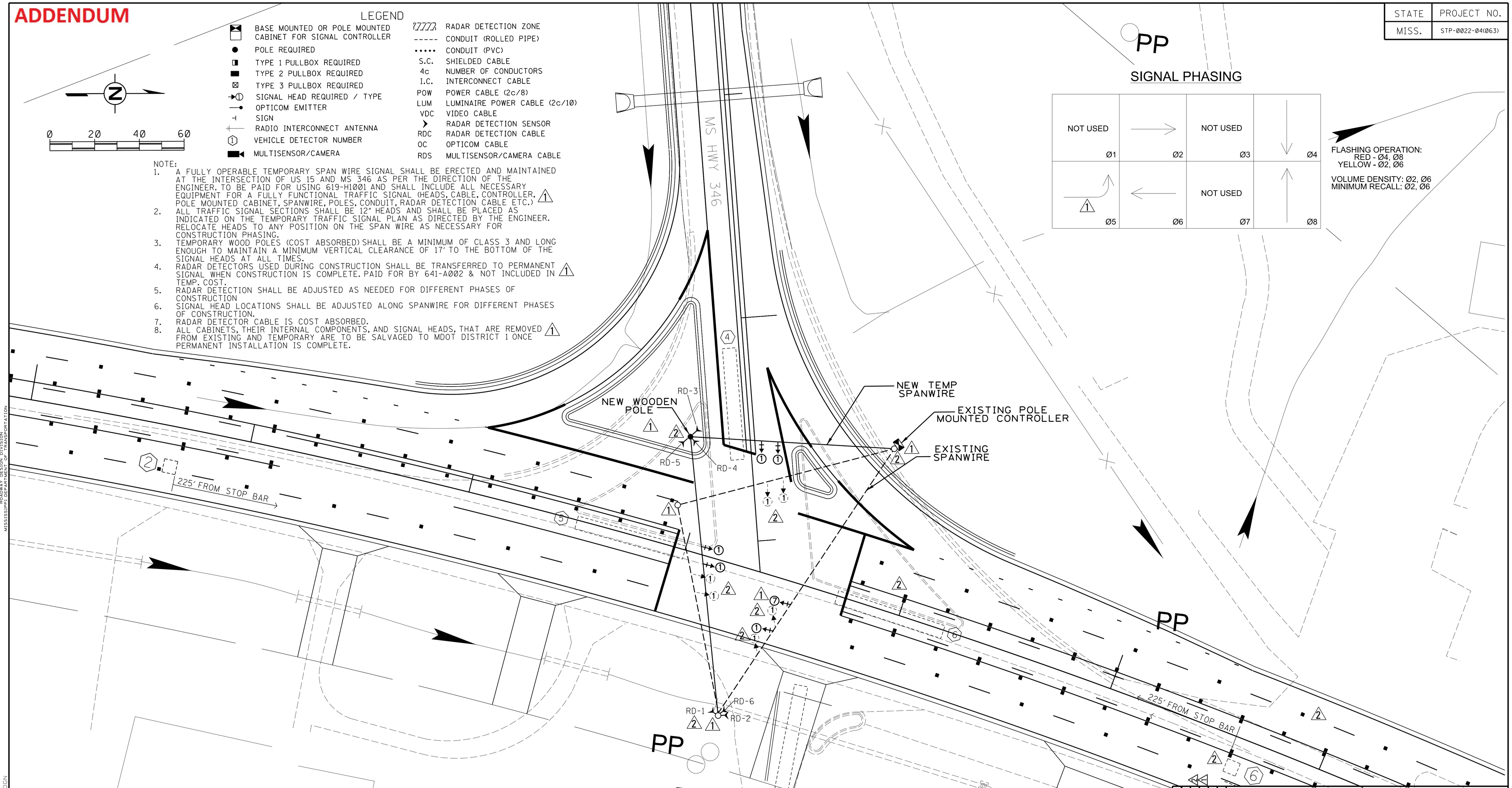

SIGNAL PHASING

NOT USED Ø1	Ø2	NOT USED Ø3	Ø4
1 Ø5	Ø6	NOT USED Ø7	Ø8

FLASHING OPERATION:
RED - Ø4, Ø8
YELLOW - Ø2, Ø6

VOLUME DENSITY: Ø2, Ø6
MINIMUM RECALL: Ø2, Ø6

2 DETECTOR CHART

DETECTOR NUMBER	PHASE	ZONE LOCATION	SIZE	COMMENTS
RD-1	2	ADVANCED	6' X 6'	225' FROM STOP BAR
RD-2	8	PRESENCE	6' X 50'	3' IN FRONT OF STOP BAR
RD-3	4	PRESENCE	6' X 50'	3' IN FRONT OF STOP BAR
RD-4	6	ADVANCED	6' X 6'	225' FROM STOP BAR
RD-5	5	PRESENCE	6' X 50'	3' IN FRONT OF STOP BAR
RD-6	6	PRESENCE	6' X 50'	3' IN FRONT OF STOP BAR

DATE	REVISION	BY
3/7/18	REVISE CHART, SENSORS AND LABEL RADAR DETECTORS	WCJ
1-22-18	REVISED TO REFLECT EXISTING POLE MOUNTED CONTROLLER, ADD RADAR DETECTOR FIXED SIGNAL HEAD TYPE, FIXED SIGNAL PHASING	MDB

MISSISSIPPI DEPARTMENT OF TRANSPORTATION

TEMP TRAFFIC SIGNAL DETAIL

US 15 AND MS 346
PHASE 1

COUNTY: PONTOTOC
PROJ. NUM.: STP-0022-04(063)

WORKING NUMBER TEMP-1

FILENAME: TSI.DGN
DESIGN TEAM ____ CHECKED ____ DATE ____

SHEET NUMBER 2004

PLAN
ROADWAY DESIGN DIVISION
MISSISSIPPI DEPARTMENT OF TRANSPORTATION

3/8/2018 1:27 PM TSI-2.1TEMP.1.DGN

FMS CON:102607-303000

STATE	PROJECT NO.
MISS.	STP-0022-04(063)

ADDENDUM

LEGEND

- BASE MOUNTED OR POLE MOUNTED CABINET FOR SIGNAL CONTROLLER
- POLE REQUIRED
- TYPE 1 PULLBOX REQUIRED
- TYPE 2 PULLBOX REQUIRED
- TYPE 3 PULLBOX REQUIRED
- SIGNAL HEAD REQUIRED / TYPE
- OPTICOM EMITTER
- SIGN
- RADIO INTERCONNECT ANTENNA
- VEHICLE DETECTOR NUMBER
- MULTISENSOR/CAMERA
- RADAR DETECTION ZONE
- CONDUIT (ROLLED PIPE)
- CONDUIT (PVC)
- S.C. SHIELDED CABLE
- 4c NUMBER OF CONDUCTORS
- I.C. INTERCONNECT CABLE
- POW POWER CABLE (2c/8)
- LUM LUMINAIRE POWER CABLE (2c/10)
- VDC VIDEO CABLE
- RADAR DETECTION SENSOR
- RDC RADAR DETECTION CABLE
- OC OPTICOM CABLE
- RDS MULTISENSOR/CAMERA CABLE

0 20 40 60

NOTE:

1. A FULLY OPERABLE TEMPORARY SPAN WIRE SIGNAL SHALL BE ERECTED AND MAINTAINED AT THE INTERSECTION OF US 15 AND MS 346 AS PER THE DIRECTION OF THE ENGINEER. TO BE PAID FOR USING 619-H001 AND SHALL INCLUDE ALL NECESSARY EQUIPMENT FOR A FULLY FUNCTIONAL TRAFFIC SIGNAL (HEADS, CABLE, CONTROLLER, POLE MOUNTED CABINET, SPANWIRE, POLES, CONDUIT, RADAR DETECTION CABLE ETC.)
2. ALL TRAFFIC SIGNAL SECTIONS SHALL BE 12" HEADS AND SHALL BE PLACED AS INDICATED ON THE TEMPORARY TRAFFIC SIGNAL PLAN AS DIRECTED BY THE ENGINEER. RELOCATE HEADS TO ANY POSITION ON THE SPAN WIRE AS NECESSARY FOR CONSTRUCTION PHASING.
3. TEMPORARY WOOD POLES (COST ABSORBED) SHALL BE A MINIMUM OF CLASS 3 AND LONG ENOUGH TO MAINTAIN A MINIMUM VERTICAL CLEARANCE OF 17' TO THE BOTTOM OF THE SIGNAL HEADS AT ALL TIMES.
4. RADAR DETECTORS USED DURING CONSTRUCTION SHALL BE TRANSFERRED TO PERMANENT SIGNAL WHEN CONSTRUCTION IS COMPLETE. PAID FOR BY 641-A002 & NOT INCLUDED IN TEMP. COST.
5. RADAR DETECTION SHALL BE ADJUSTED AS NEEDED FOR DIFFERENT PHASES OF CONSTRUCTION
6. SIGNAL HEAD LOCATIONS SHALL BE ADJUSTED ALONG SPANWIRE FOR DIFFERENT PHASES OF CONSTRUCTION.
7. RADAR DETECTOR CABLE IS COST ABSORBED.
8. ALL CABINETS, THEIR INTERNAL COMPONENTS, AND SIGNAL HEADS, THAT ARE REMOVED FROM EXISTING AND TEMPORARY ARE TO BE SALVAGED TO MDOT DISTRICT 1 ONCE PERMANENT INSTALLATION IS COMPLETE.

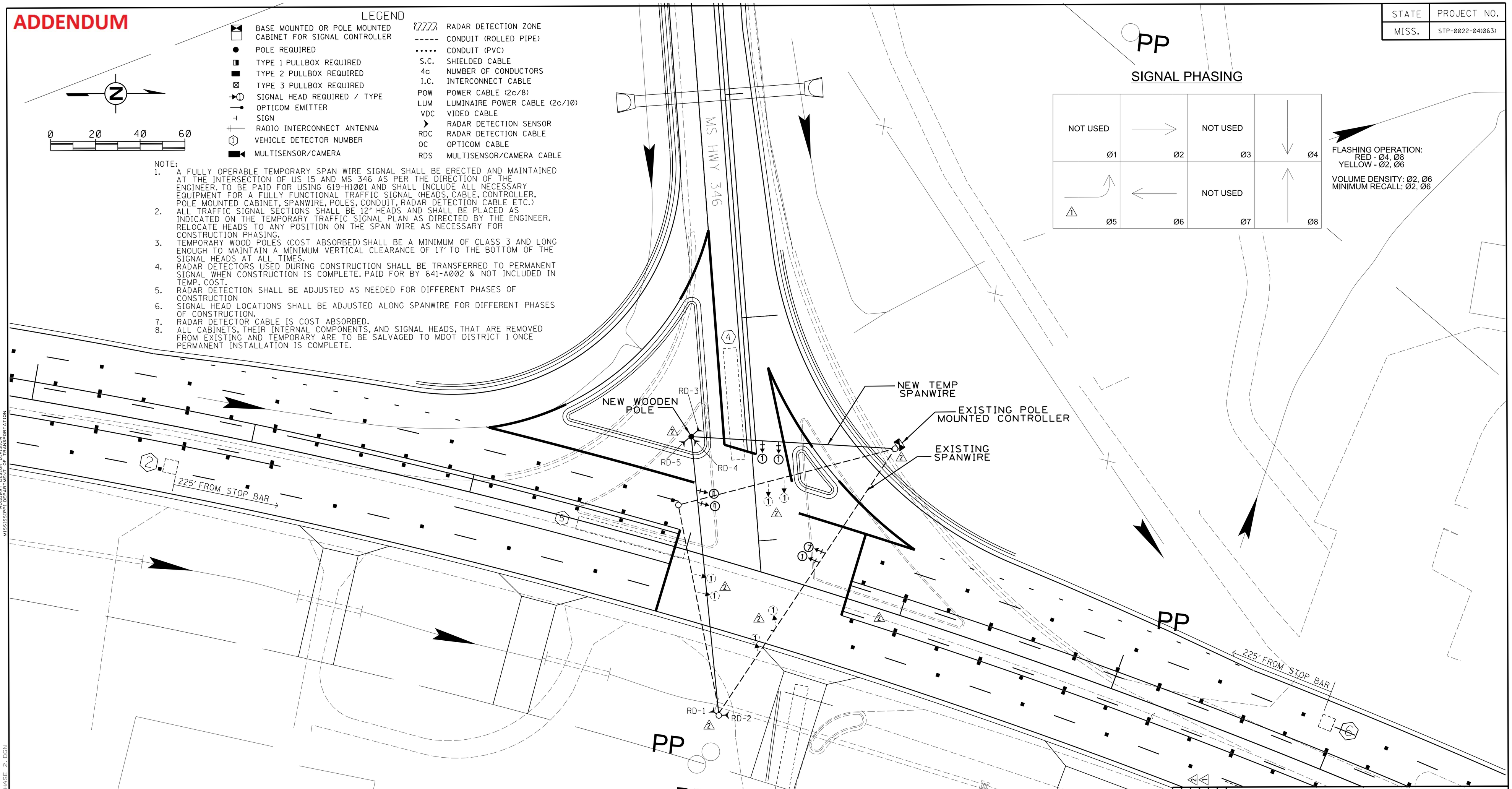

SIGNAL PHASING

NOT USED Ø1	Ø2	NOT USED Ø3	Ø4
Ø5	Ø6	NOT USED Ø7	Ø8

FLASHING OPERATION:
RED - Ø4, Ø8
YELLOW - Ø2, Ø6

VOLUME DENSITY: Ø2, Ø6
MINIMUM RECALL: Ø2, Ø6

DETECTOR CHART

DETECTOR NUMBER	PHASE	ZONE LOCATION	SIZE	COMMENTS
RD-1	2	ADVANCE	6' X 6'	225' FROM STOP BAR
RD-2	8	PRESENCE	6' X 50'	3' IN FRONT OF STOP BAR
RD-3	4	PRESENCE	6' X 50'	3' IN FRONT OF STOP BAR
RD-4	6	ADVANCE	6' X 6'	225' FROM STOP BAR
RD-5	5	PRESENCE	6' X 50'	3' IN FRONT OF STOP BAR

DATE	REVISION	BY
3/7/18	REVISE CHARTS AND CALL OUTS	WCJ
1-22-18	PAGE ADDED	MDB

MISSISSIPPI DEPARTMENT OF TRANSPORTATION

TEMP TRAFFIC SIGNAL DETAIL

US 15 AND MS 346
PHASE 2

COUNTY: PONTOTOC
PROJ. NUM.: STP-0022-04(063)

FILENAME: TSI.DGN
DESIGN TEAM _____ CHECKED _____ DATE _____

WORKING NUMBER TEMP-2

SHEET NUMBER 2005

PLAN
ROADWAY DESIGN DIVISION
MISSISSIPPI DEPARTMENT OF TRANSPORTATION

3/8/2018 1:27 PM TSI-2 (TEMP.) PHASE 2.DGN

FMS CON:102607-303000

ADDENDUM

STATE	PROJECT NO.
MISS.	STP-0022-04(063)

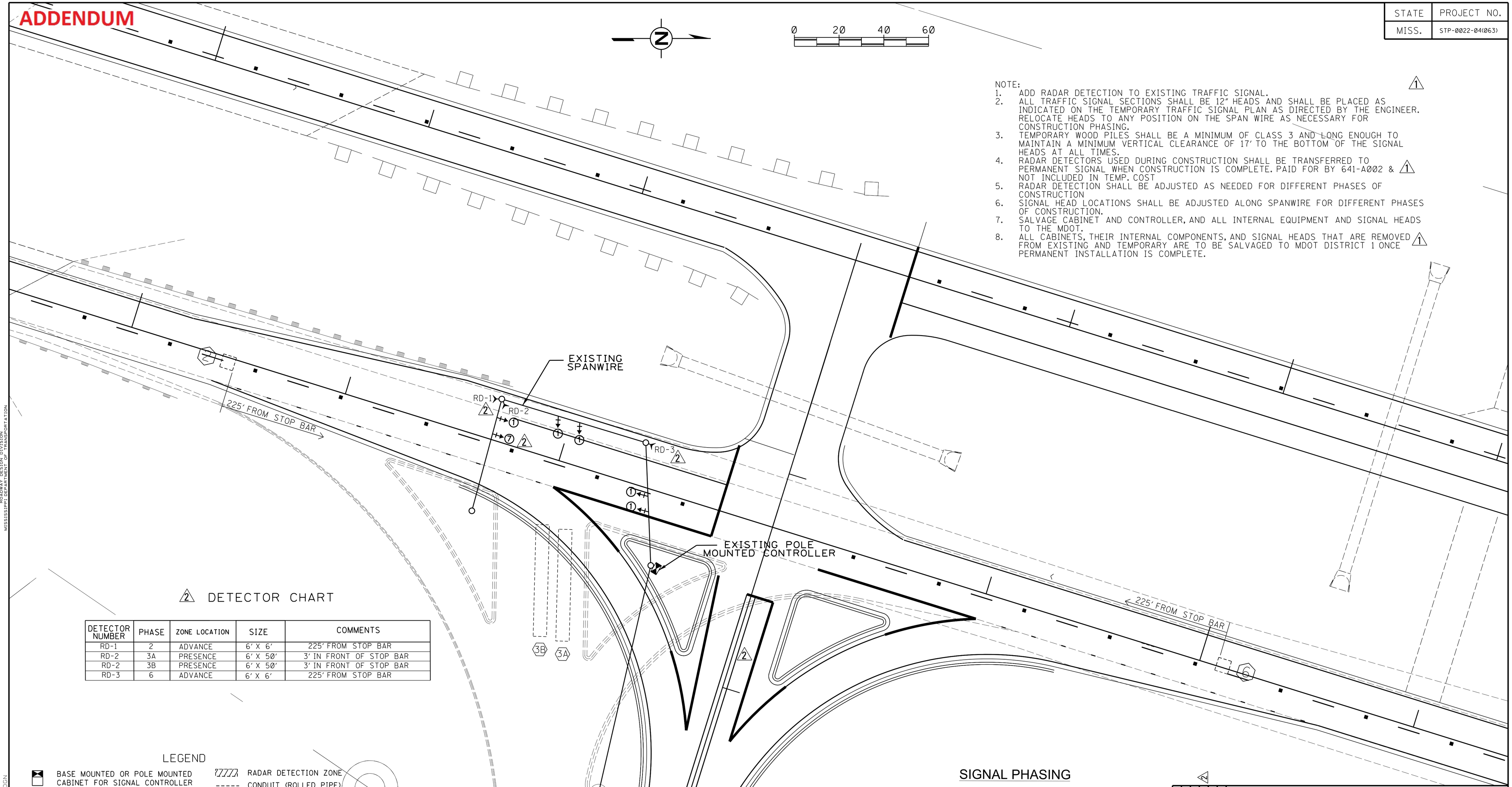

NOTE:
1. ADD RADAR DETECTION TO EXISTING TRAFFIC SIGNAL. △1
2. ALL TRAFFIC SIGNAL SECTIONS SHALL BE 12" HEADS AND SHALL BE PLACED AS INDICATED ON THE TEMPORARY TRAFFIC SIGNAL PLAN AS DIRECTED BY THE ENGINEER. RELOCATE HEADS TO ANY POSITION ON THE SPAN WIRE AS NECESSARY FOR CONSTRUCTION PHASING.
3. TEMPORARY WOOD PILES SHALL BE A MINIMUM OF CLASS 3 AND LONG ENOUGH TO MAINTAIN A MINIMUM VERTICAL CLEARANCE OF 17' TO THE BOTTOM OF THE SIGNAL HEADS AT ALL TIMES.
4. RADAR DETECTORS USED DURING CONSTRUCTION SHALL BE TRANSFERRED TO PERMANENT SIGNAL WHEN CONSTRUCTION IS COMPLETE. PAID FOR BY 641-A002 & △1 NOT INCLUDED IN TEMP. COST
5. RADAR DETECTION SHALL BE ADJUSTED AS NEEDED FOR DIFFERENT PHASES OF CONSTRUCTION
6. SIGNAL HEAD LOCATIONS SHALL BE ADJUSTED ALONG SPANWIRE FOR DIFFERENT PHASES OF CONSTRUCTION.
7. SALVAGE CABINET AND CONTROLLER, AND ALL INTERNAL EQUIPMENT AND SIGNAL HEADS TO THE MDOT.
8. ALL CABINETS, THEIR INTERNAL COMPONENTS, AND SIGNAL HEADS THAT ARE REMOVED △1 FROM EXISTING AND TEMPORARY ARE TO BE SALVAGED TO MDOT DISTRICT 1 ONCE PERMANENT INSTALLATION IS COMPLETE.

△2 DETECTOR CHART

DETECTOR NUMBER	PHASE	ZONE LOCATION	SIZE	COMMENTS
RD-1	2	ADVANCE	6' X 6'	225' FROM STOP BAR
RD-2	3A	PRESENCE	6' X 50'	3' IN FRONT OF STOP BAR
RD-2	3B	PRESENCE	6' X 50'	3' IN FRONT OF STOP BAR
RD-3	6	ADVANCE	6' X 6'	225' FROM STOP BAR

LEGEND

- BASE MOUNTED OR POLE MOUNTED CABINET FOR SIGNAL CONTROLLER
- POLE REQUIRED
- TYPE 1 PULLBOX REQUIRED
- TYPE 2 PULLBOX REQUIRED
- TYPE 3 PULLBOX REQUIRED
- SIGNAL HEAD REQUIRED / TYPE
- OPTICOM EMITTER
- SIGN
- RADIO INTERCONNECT ANTENNA
- VEHICLE DETECTOR NUMBER
- MULTISENSOR/CAMERA
- RADAR DETECTION ZONE
- CONDUIT (ROLLED PIPE)
- CONDUIT (PVC)
- S.C. SHIELDED CABLE
- 4c NUMBER OF CONDUCTORS
- I.C. INTERCONNECT CABLE
- POW POWER CABLE (2c/8)
- LUM LUMINAIRE POWER CABLE (2c/10)
- VDC VIDEO CABLE
- RADAR DETECTION SENSOR
- RDC RADAR DETECTION CABLE
- OC OPTICOM CABLE
- RDS MULTISENSOR/CAMERA CABLE

SIGNAL PHASING

FLASHING OPERATION:
RED - Ø3
YELLOW - Ø2, Ø6

VOLUME DENSITY: Ø2, Ø6
MINIMUM RECALL: Ø2, Ø6

NOT USED Ø1	Ø2	Ø3	NOT USED Ø4
NOT USED Ø5	Ø6	NOT USED Ø7	NOT USED △2 Ø8

△2

DATE	REVISION	BY
3/7/18	REMOVE NOTE, SENSOR, LABEL DETECTOR	WCJ

MISSISSIPPI DEPARTMENT OF TRANSPORTATION

TEMP. TRAFFIC SIGNAL DETAIL
US 15 AND MS 345
PHASE 1

COUNTY: PONTOTOC
PROJ. NUM.: STP-0022-04(063)

FILENAME: TSI.DGN
DESIGN TEAM _____ CHECKED _____ DATE _____

WORKING NUMBER TEMP-3
SHEET NUMBER 2006

PLAN
ROADWAY DESIGN DIVISION
MISSISSIPPI DEPARTMENT OF TRANSPORTATION

3/8/2018 1:27 PM TSI_3 (TEMP.).DGN

FMS CON:102607-303000

ADDENDUM

STATE	PROJECT NO.
MISS.	STP-0022-04(063)

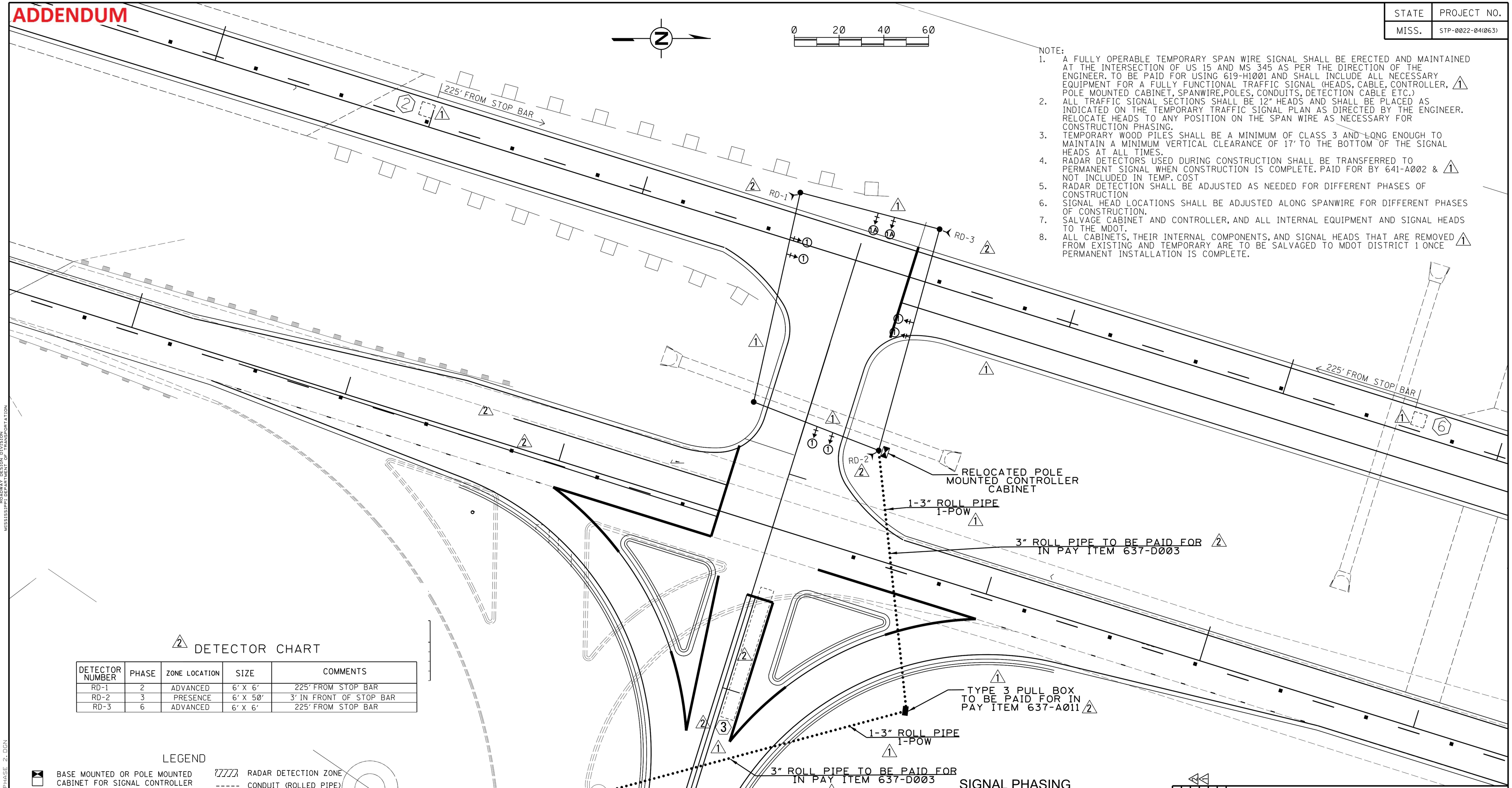

NOTE:

1. A FULLY OPERABLE TEMPORARY SPAN WIRE SIGNAL SHALL BE ERECTED AND MAINTAINED AT THE INTERSECTION OF US 15 AND MS 345 AS PER THE DIRECTION OF THE ENGINEER. TO BE PAID FOR USING 619-H001 AND SHALL INCLUDE ALL NECESSARY EQUIPMENT FOR A FULLY FUNCTIONAL TRAFFIC SIGNAL (HEADS, CABLE, CONTROLLER, POLE MOUNTED CABINET, SPANWIRE, POLES, CONDUITS, DETECTION CABLE ETC.) 1
2. ALL TRAFFIC SIGNAL SECTIONS SHALL BE 12" HEADS AND SHALL BE PLACED AS INDICATED ON THE TEMPORARY TRAFFIC SIGNAL PLAN AS DIRECTED BY THE ENGINEER. RELOCATE HEADS TO ANY POSITION ON THE SPAN WIRE AS NECESSARY FOR CONSTRUCTION PHASING.
3. TEMPORARY WOOD PILES SHALL BE A MINIMUM OF CLASS 3 AND LONG ENOUGH TO MAINTAIN A MINIMUM VERTICAL CLEARANCE OF 17' TO THE BOTTOM OF THE SIGNAL HEADS AT ALL TIMES.
4. RADAR DETECTORS USED DURING CONSTRUCTION SHALL BE TRANSFERRED TO PERMANENT SIGNAL WHEN CONSTRUCTION IS COMPLETE. PAID FOR BY 641-A002 & NOT INCLUDED IN TEMP. COST 1
5. RADAR DETECTION SHALL BE ADJUSTED AS NEEDED FOR DIFFERENT PHASES OF CONSTRUCTION
6. SIGNAL HEAD LOCATIONS SHALL BE ADJUSTED ALONG SPANWIRE FOR DIFFERENT PHASES OF CONSTRUCTION.
7. SALVAGE CABINET AND CONTROLLER, AND ALL INTERNAL EQUIPMENT AND SIGNAL HEADS TO THE MDOT.
8. ALL CABINETS, THEIR INTERNAL COMPONENTS, AND SIGNAL HEADS THAT ARE REMOVED FROM EXISTING AND TEMPORARY ARE TO BE SALVAGED TO MDOT DISTRICT 1 ONCE PERMANENT INSTALLATION IS COMPLETE. 1

2 DETECTOR CHART

DETECTOR NUMBER	PHASE	ZONE LOCATION	SIZE	COMMENTS
RD-1	2	ADVANCED	6' X 6'	225' FROM STOP BAR
RD-2	3	PRESENCE	6' X 50'	3' IN FRONT OF STOP BAR
RD-3	6	ADVANCED	6' X 6'	225' FROM STOP BAR

LEGEND

- BASE MOUNTED OR POLE MOUNTED CABINET FOR SIGNAL CONTROLLER
- POLE REQUIRED
- TYPE 1 PULLBOX REQUIRED
- TYPE 2 PULLBOX REQUIRED
- TYPE 3 PULLBOX REQUIRED
- SIGNAL HEAD REQUIRED / TYPE
- OPTICOM EMITTER
- SIGN
- RADIO INTERCONNECT ANTENNA
- VEHICLE DETECTOR NUMBER
- MULTISENSOR/CAMERA
- RADAR DETECTION ZONE
- CONDUIT (ROLLED PIPE)
- CONDUIT (PVC)
- S.C. SHIELDED CABLE
- 4c NUMBER OF CONDUCTORS
- I.C. INTERCONNECT CABLE
- POW POWER CABLE (2c/8)
- LUM LUMINAIRE POWER CABLE (2c/10)
- VDC VIDEO CABLE
- RADAR DETECTION SENSOR
- RDC RADAR DETECTION CABLE
- OC OPTICOM CABLE
- RDS MULTISENSOR/CAMERA CABLE

SIGNAL PHASING

NOT USED Ø1	Ø2	Ø3	NOT USED Ø4
NOT USED Ø5	Ø6	NOT USED Ø7	NOT USED 2 Ø8

FLASHING OPERATION:
RED - Ø3
YELLOW - Ø2, Ø6 2

VOLUME DENSITY: Ø2, Ø6
MINIMUM RECALL: Ø2, Ø6

DATE	REVISION	BY
3/7/18	REVISE NOTES, CHARTS AND CALL OUTS	WCJ
1-22-18	ADDED SIGNAL HEADS, PULL BOX & RIP TYPE CHANGED, EP FIXED, ZONES MOVED FOR PHASE	MDB

MISSISSIPPI DEPARTMENT OF TRANSPORTATION

TEMP. TRAFFIC SIGNAL DETAIL
US 15 AND MS 345
PHASE 2

COUNTY: PONTOTOC
PROJ. NUM.: STP-0022-04(063)

FILENAME: TSI.DGN
DESIGN TEAM _____ CHECKED _____ DATE _____

WORKING NUMBER TEMP-4
SHEET NUMBER 2007

PLAN
ROADWAY DESIGN DIVISION
MISSISSIPPI DEPARTMENT OF TRANSPORTATION

3/8/2018 1:27 PM TSI-3 (TEMP.) PHASE 2.DGN

ADDENDUM

STATE	PROJECT NO.
MISS.	STP-0022-04(063)

1 ADDED SHEET

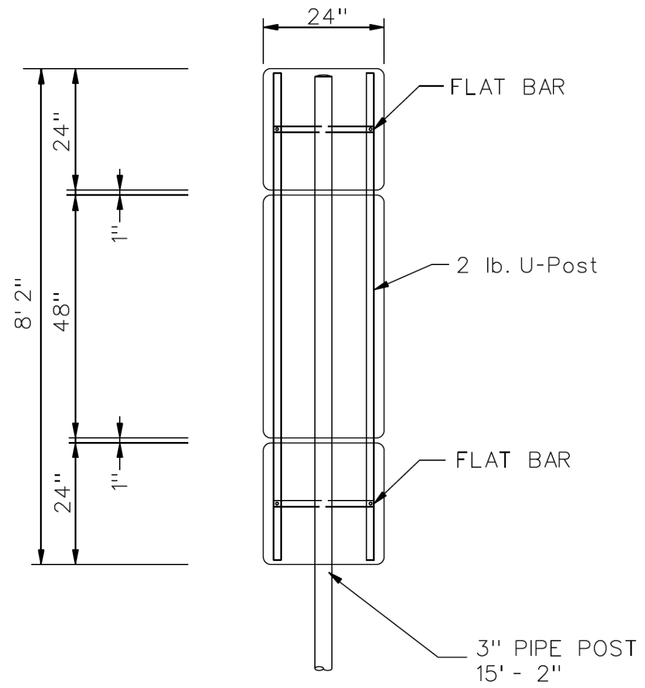

REAR VIEW OF SIGN

FRONT VIEW OF SIGN

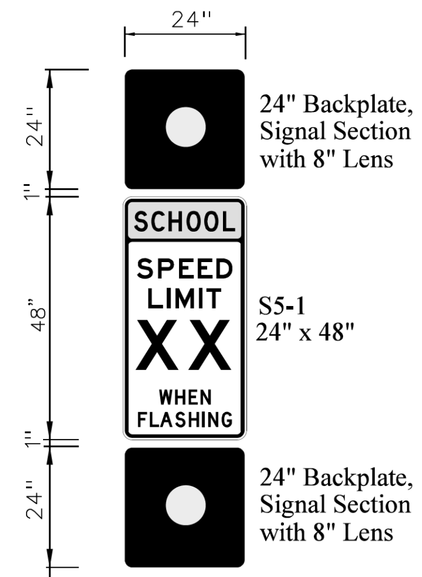

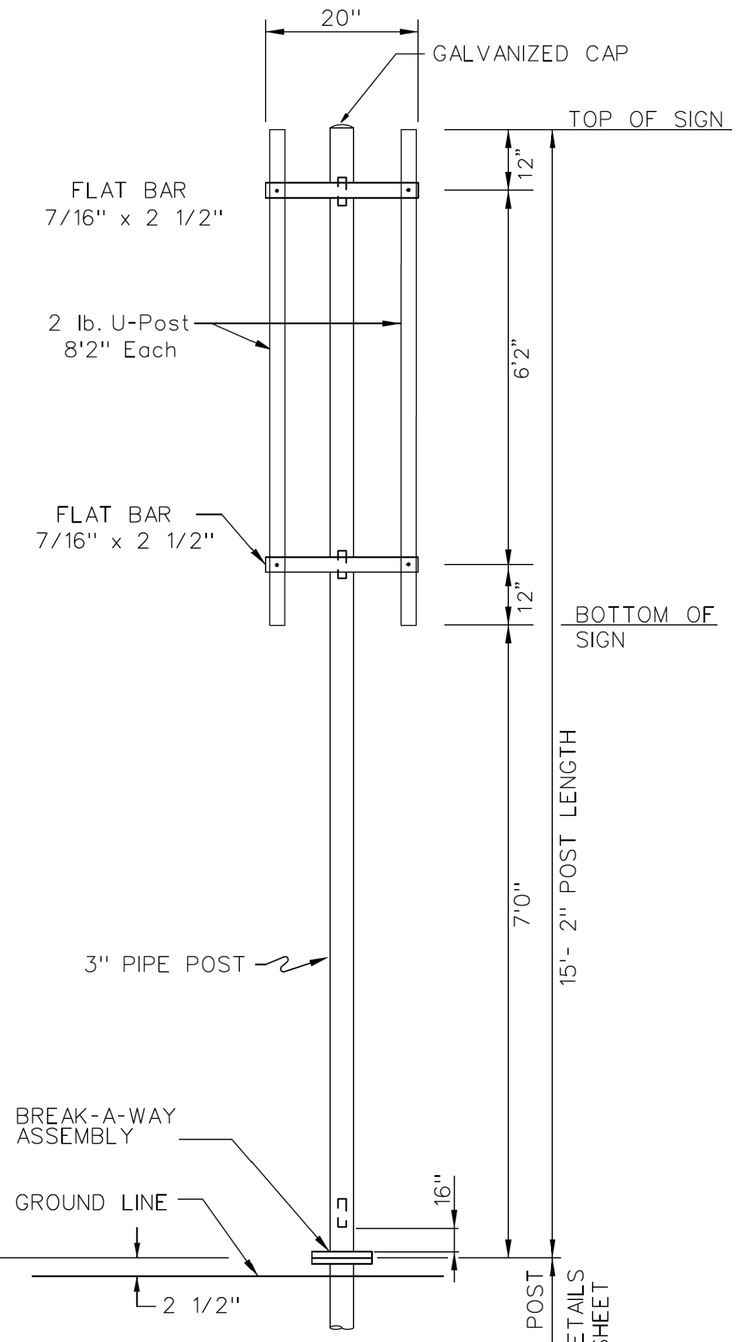

FRONT VIEW OF POST

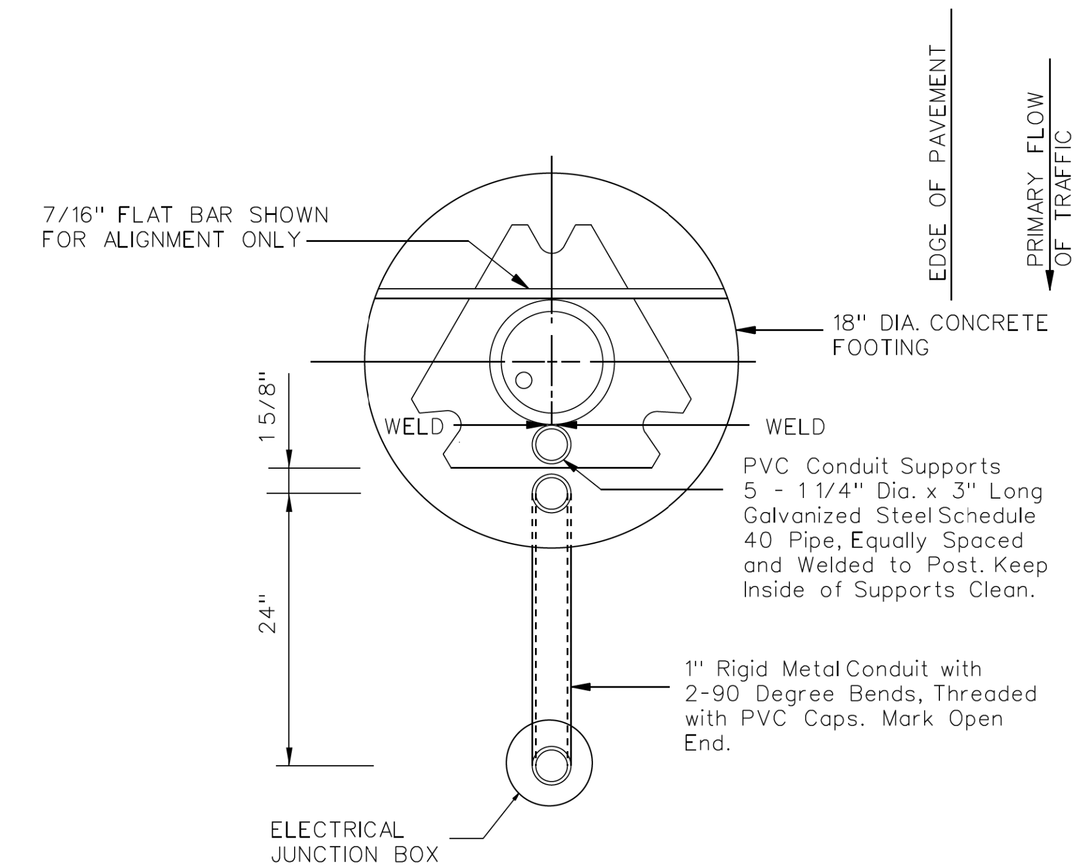

TOP VIEW OF FOOTING

VIEW NOT TO SCALE - SHOWS RELATIVE LOCATION OF ROADWAY, POST, FLAT BARS, JUNCTION BOX, GALVANIZED STEEL CONDUIT AND PVC CONDUIT HOLDERS.

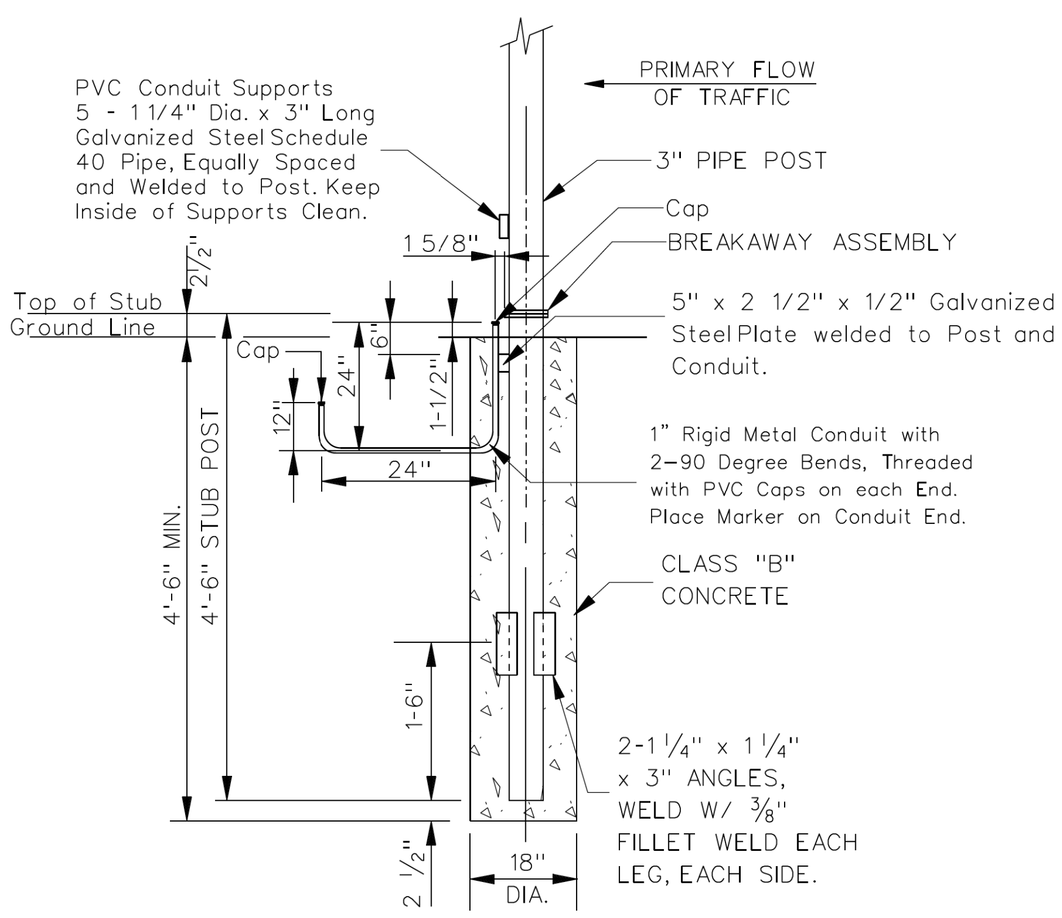

FOOTING DETAIL
FOR TYPE "D" POST WITH
FLASHING ASSEMBLY

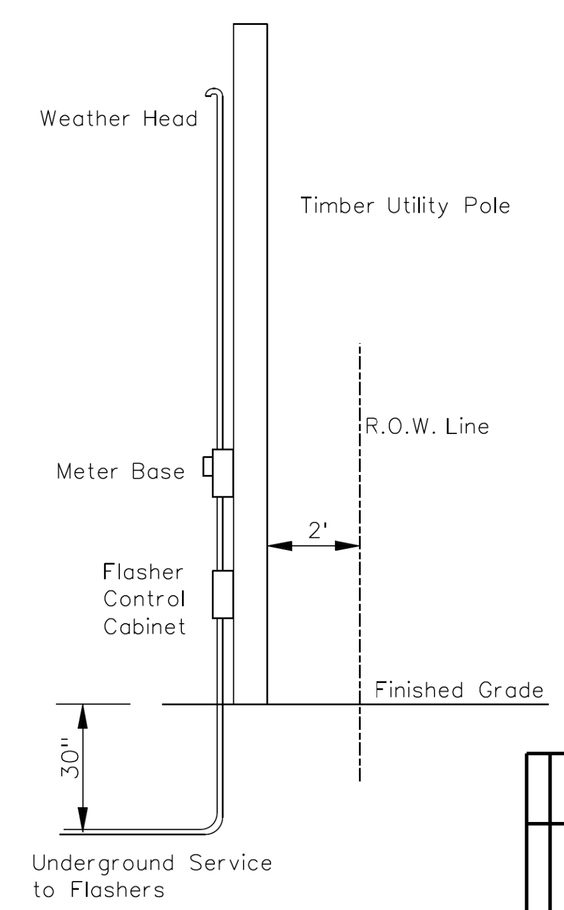

NOTES:

1. ELECTRICAL JUNCTION BOX TO BE PLACED FLUSH WITH GROUND.
2. ALL ABOVE GROUND WIRING SHALL BE ENCLOSED IN 1" PVC CONDUIT WITH A BREAK-A-WAY CONNECTION AT THE POST.
3. THE WIRING SHALL INCLUDE A WATERPROOF FUSE IN THE JUNCTION BOX AND A WATERPROOF CUT-Off SWITCH AT THE METER.
4. THE INSIDE OF THE CONDUIT SUPPORTS SHALL BE CLEAN AND FREE OF WELD.
5. IF FIELD ADJUSTMENTS ARE NEEDED THE EXACT PLACEMENT OF SIGNS SHALL BE DETERMINED BY THE TRAFFIC ENGINEER.
6. SCHOOL SPEED LIMIT (XX) SHALL BE SET AT 10 MILES PER HOUR LESS THAN THE POSTED SPEED.
7. FLASHING YELLOW SIGNAL SHALL FLASH AT A RATE OF NOT LESS THAN 50 OR MORE THAN 60 TIMES PER MINUTE. THE ILLUMINATED PERIOD OF EACH FLASH SHALL BE A MINIMUM OF 1/2 AND A MAXIMUM OF 2/3 OF THE TOTAL CYCLE.
8. THE YELLOW SIGNALS SHALL BE FLASHED ALTERNATELY.

DATE	REVISION	BY
3/7/18	ADDED SHEET	DSP

MISSISSIPPI DEPARTMENT OF TRANSPORTATION

SPECIAL POST DESIGN for SCHOOL - SPEED LIMIT WHEN FLASHING ASSEMBLY

PROJ. NO.: STP-0022-04(063)

COUNTY: PONTOTOC

WORKING NUMBER **RSP-20**

SHEET NUMBER **2023**

FILENAME:

DESIGN TEAM CHECKED DATE

PLAN
ROADWAY DESIGN DIVISION
MISSISSIPPI DEPARTMENT OF TRANSPORTATION
3/9/2018 7:33:26 AM RSP-20.DGN

ADDENDUM

STATE	PROJECT NO.
MISS.	STP-0022-04(063)

DESCRIPTION OF SHEETS	WORKING NUMBER	SHEET NUMBER
DETAILED INDEX (BRIDGE)	DI-BR-1	8001
SUMMARY OF QUANTITIES (BRIDGE)	SQ-BR-1	8002
BRIDGE "A" AT STA. 172+89.19		
ESTIMATED QUANTITIES, GENERAL NOTES, & LAYOUT	A1 OF A17	8003
FOUNDATION PLAN	A2 OF A17	8004
GENERALIZED SOIL PROFILE	A3 OF A17	8005
END BENT NO. 1R DETAILS	A4 OF A17	8006
END BENT NO. 6R DETAILS	A5 OF A17	8007
END BENT DETAILS	A6 OF A17	8008
INT. BENTS NO. 2R & 5R DETAILS	A7 OF A17	8009
INT. BENT NO. 3R DETAILS	A8 OF A17	8010
INT. BENT NO. 4R DETAILS	A9 OF A17	8011
SHEAR KEY DETAILS	A10 OF A17	8012
40 FT. SPAN DETAILS SPANS 1R, 2R, 4R, & 5R	A11 OF A17	8013
40 FT. SPAN DETAILS	A12 OF A17	8014
80 FT. SPAN DETAILS SPAN NO. 3R	A13 OF A17	8015
80 FT. SPAN DETAILS	A14 OF A17	8016
MISCELLANEOUS SPAN DETAILS	A15 OF A17	8017
40 FT. BEAM DETAILS BEAM 40-1 (TYPE 1+2)	A16 OF A17	8018
80 FT. BEAM DETAILS BEAM 80-1 (TYPE III)	A17 OF A17	8019
BRIDGE "B" AT STA. 120+15.00		
BRIDGE REPAIR	B1 OF B2	8020
PILE ENCASEMENT REPAIR DETAILS	B2 OF B2	8021
FOR INFORMATION ONLY		8022
FOR INFORMATION ONLY		8023
FOR INFORMATION ONLY		8024
FOR INFORMATION ONLY		8025
FOR INFORMATION ONLY		8026
FOR INFORMATION ONLY		8027
FOR INFORMATION ONLY		8028
FOR INFORMATION ONLY		8029
FOR INFORMATION ONLY		8030
FOR INFORMATION ONLY		8031
FOR INFORMATION ONLY		8032

DESCRIPTION OF SHEETS	WORKING NUMBER	SHEET NUMBER
BRIDGE "C" AT STA. 436+78.60		
ESTIMATED QUANTITIES & GENERAL NOTES	C1 OF C12	8033
ELEVATION WITH PROFILE ALONG ℄ RIGHT LANE SR 15	C2 OF C12	8034
FOUNDATION PLAN	C3 OF C12	8035
MSE RETAINING WALL DETAILS	C4 OF C12	8036
MSE RETAINING WALL DETAILS	C5 OF C12	8037
END BENT NO. 1 DETAILS	C6 OF C12	8038
END BENT NO. 2 DETAILS	C7 OF C12	8039
END BENT DETAILS	C8 OF C12	8040
80 FT. SPAN DETAILS	C9 OF C12	8041
80 FT. SPAN DETAILS	C10 OF C12	8042
MISCELLANEOUS SPAN DETAILS	C11 OF C12	8043
80'-0" BEAM DETAILS (TYPE III) BEAM 80-1	C12 OF C12	8044
BRIDGE EROSION CONTROL PLANS		
BRIDGE "A" LAYOUT	ECBR-A1	8045
BRIDGE "A" FOUNDATION	ECBR-A2	8046
STANDARD BRIDGE SHEETS		
2'-8" RAILING DETAILS	RD-32	8047

BRIDGE DEVISION		
REVISIONS		
DATE	SHEET NO.	BY
03/09/2018	8002	BJ
03/09/2018	8003	AH

MISSISSIPPI DEPARTMENT OF TRANSPORTATION

BRIDGE AT STA. 172+89.18
RT. LN.

SR 15 OVER LAPPATUBBY CREEK
BRIDGE NO. 281.7

FMS: **102607 / 303000**
COUNTY: **PONTOTOC**
PROJECT NUMBER: **STP-0022-04(063)**

DESIGNER **Adam Jackson** CHECKER **Spencer Yates**
DETAILER **Andy Hilton** ISSUE DATE **12/13/2017**

DIRECTOR OF STRUCTURES, STATE BRIDGE ENGINEER - JUSTIN WALKER, P.E.
DEP. DIR. OF STRUCTURES, ASST. STATE BRIDGE ENGINEER - SCOTT WESTERFIELD, P.E.

WORKING NUMBER DI-BR-1
SHEET NUMBER 8001

PLAN
BRIDGE DIVISION
MISSISSIPPI DEPARTMENT OF TRANSPORTATION

001 00 ANPM DONFILENAME

ADDENDUM

STATE	PROJECT NO.
MISS	STP-0022-04(063)

SUMMARY OF QUANTITIES

PAY ITEM NO.	PAY ITEM	UNIT	QUANTITIES	
	BRIDGE SUMMARY		PRELIMINARY	FINAL
501-K001	Transverse Grooving	SY	1,280	
803-B001	Conventional Static Pile Load Test	EA	3	
803-D005	HP 14 x 117 Steel Piling	LF	1,895	
803-D007	HP 14 x 89 Steel Piling	LF	665	
803-I003	PDA Test Pile, HP Steel Pile	EA	5	
803-J001	Pile Restrike	EA	4	
804-A001	Bridge Concrete, Class AA	CY	364	
804-A004	Bridge Concrete, Class BD	CY	386	
804-C065	40' Prestressed Concrete Beam, Type I+2	LF	947	
804-C121	80' Prestressed Concrete Beam, Type III	LF	957	
805-A001	Reinforcement	LBS	121,353	
809-A003	Retaining Wall System, Mechanically Stabilized	SF	3,698	
813-A002	Concrete Railing, 32"	LF	649	
815-A007	Loose Riprap, Size 300	TON	2,204	
815-E001	Geotextile under Riprap	SY	2,418	
907-824-PP005	Bridge Repair, Epoxy Mortar Repair	CF	3	
907-824-PP006	Bridge Repair, Cleaning of Caps	EA	14	
907-824-PP008	Bridge Repair, Pile Encasement Repairs, Per Plans	LF	739	

1

Date: 12-13-2017

Date	Revision	By
03/09/2018	Revised Pile Size	BJ

MISSISSIPPI DEPARTMENT OF TRANSPORTATION
SUMMARY OF QUANTITIES
(BRIDGE ITEMS)

PROJECT STP-0022-04(063)
102607-303000

PONTOTOC County

DESIGNER Trent Wixon, PE CHECKER
DETAILER ISSUE DATE 12-13-2017

DIRECTOR OF STRUCTURES, STATE BRIDGE ENGINEER - JUSTIN WALKER. P.E.
DEP. DIR OF STRUCTURES, ASST. STATE BRIDGE ENGINEER - SCOTT WESTERFIELD, P.E.

WORKING NUMBER SQ-BR-1

SHEET NUMBER 8002

ADDENDUM

STATE	PROJECT NO.
MISS.	STP-0022-04(063)

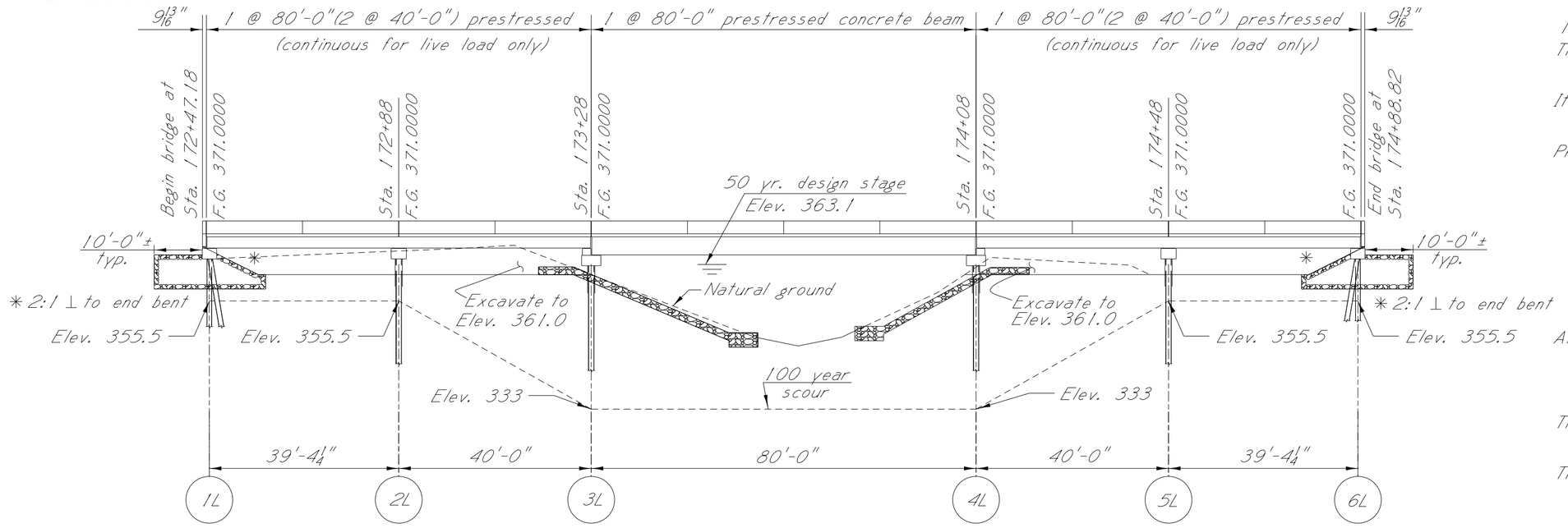

ELEVATION WITH PROFILE ALONG ℄ APPROACH ROADWAY LEFT LANE

Scale: 1" = 20'-0"

PDA TEST PILE SCHEDULE		
Bent No.	Min. Lgth.~Ft.	Tip Elevation
1R	45	320.3
3R	60	303.8
5R	45	319.9

NOTE: Build Right Lane Only This Project.

NOTE:
Geotextile fabric is required under all riprap. All riprap and geotextile fabric shown on the bridge plans are included in the bridge quantities.

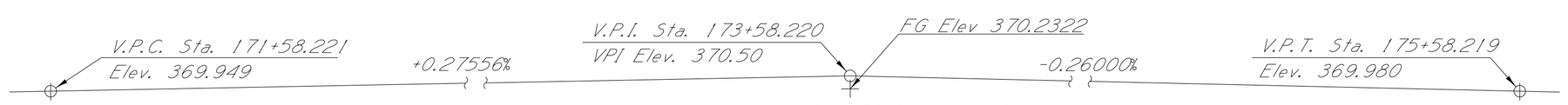

Total length of bridge 241'-7⅝"

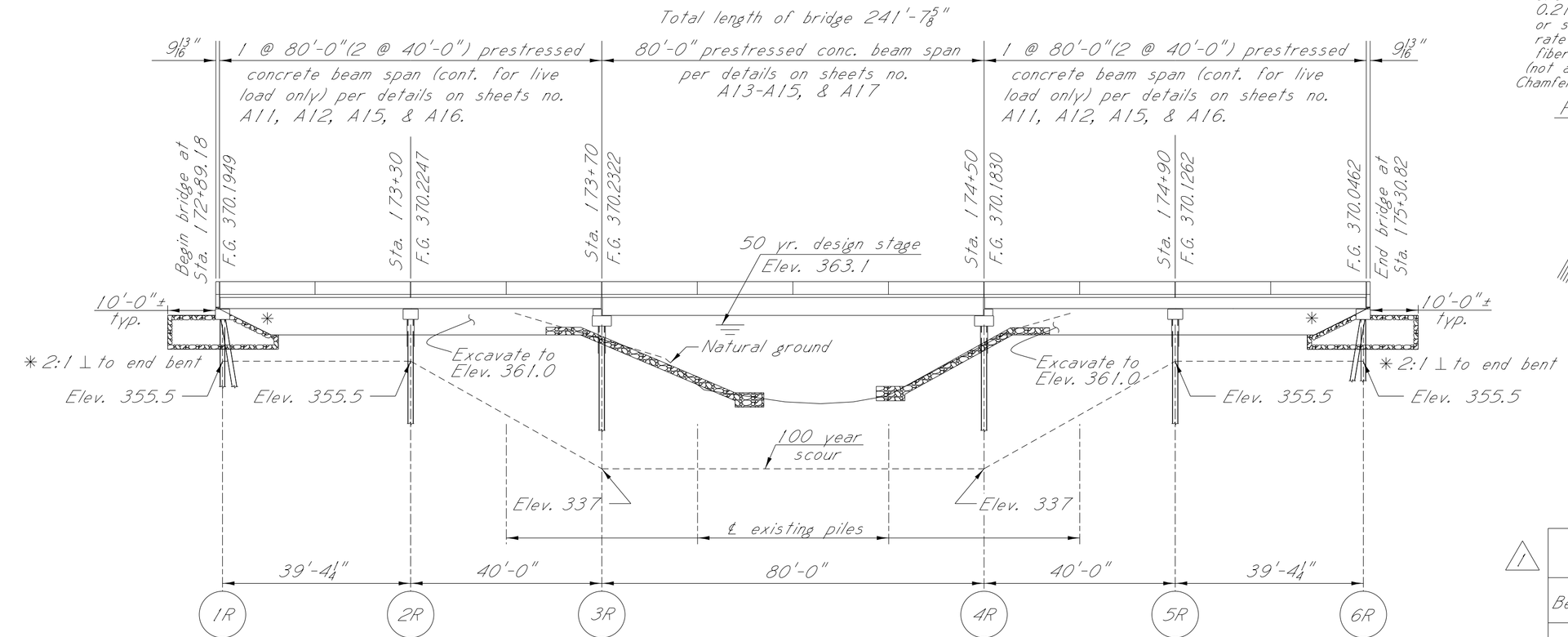

Steel pile endbent no. 1R per details on sheets no. A4 & A6. 10 ~ HP14x89 steel piles.

Steel pile intermediate bents no. 2R & 5R per details on sheet no. A7. 6 ~ HP14x117 steel piles per bent.

Steel pile intermediate bents no. 3R & 4R per details on sheets no. A8, A9, & A10. 6 ~ HP14x117 steel piles per bent.

Steel pile endbent no. 6R per details on sheets no. A5 & A6. 10 ~ HP14x89 steel piles.

ELEVATION WITH PROFILE ALONG ℄ APPROACH ROADWAY RIGHT LANE

Scale: 1" = 20'-0"

NOTE:
The girder deflection diagrams shown in these plans were prepared and intended for design and estimation purposes only. Actual bridge girder deflections may differ from the deflection diagrams shown in these plans.
It is the Contractor's responsibility to construct the bridge to meet the requirements of the plans and specifications including, but not limited to, the requirements for bridge deck smoothness.
Prior to formwork construction, the Contractor shall submit three (3) copies of a proposed BRIDGE SUPERSTRUCTURE CONSTRUCTION PLAN to the Director of Structures, State Bridge Engineer for review, through the Project Engineer. This submittal shall include all calculations, assumptions and parameters used by the Contractor to determine bridge girder deflections and form grade elevations. This submittal shall also include an erection and construction procedure that addresses the construction means and methodologies used by the Contractor and shall consider effects including, but not limited to, construction phasing, pouring schedules, applied permanent and construction loading, and shall include calculations and details of temporary girder bracing systems used to ensure girder stability and to counter the effects of girder tilt.
After girder erection and prior to deck construction, the Contractor shall submit deck thickness verification calculations for each girder. These calculations shall include a comparison of the erected girder top flange profiles versus the plan deck grade elevations over each girder plus the anticipated girder deflection due to applied permanent dead load and creep.
Three (3) copies of the deck thickness verification calculations and any proposed remediation measures to correct for thin deck areas shall be submitted to the Director of Structures, State Bridge Engineer for review, through the Project Engineer.
The BRIDGE SUPERSTRUCTURE CONSTRUCTION PLAN and the deck thickness verification calculations shall be prepared and stamped by a Mississippi Registered Professional Engineer.

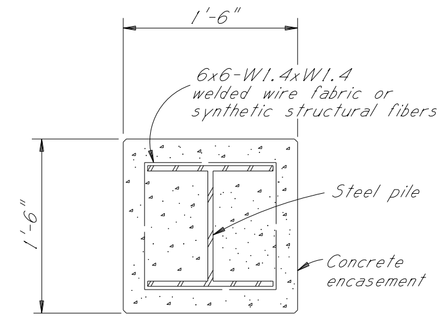

NOTE:
Concrete for pile encasement shall be class "AA" and will be paid for as bridge concrete.
Class "AA" concrete with #67 aggregate may be used for pile encasement.
Pile encasement shall be reinforced with 6x6-W1.4xW1.4 welded wire fabric weighing 0.21 lbs. per sq. ft. (not a separate pay item) or synthetic structural fiber applied at a dosage rate of 4 lbs. per cubic yd. Synthetic structural fiber shall meet requirements of Section 7-11 (not a separate pay item).
Chamfer corners of encasement ¾".

PILE ENCASEMENT DETAIL

HP14x117 steel piles

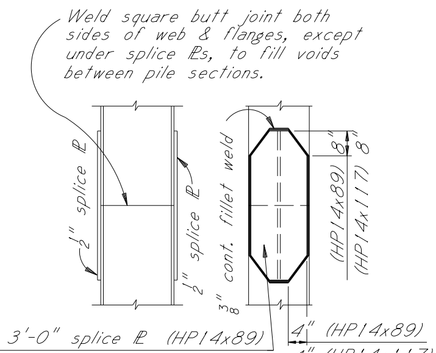

PILE SPLICE DETAIL

HP14x89 steel piles
HP14x117 steel piles

NOTE: In lieu of splice plates, prefabricated splicers may be used. Prefabricated splicers shall be submitted for approval by the Director of Structures, State Bridge Engineer.

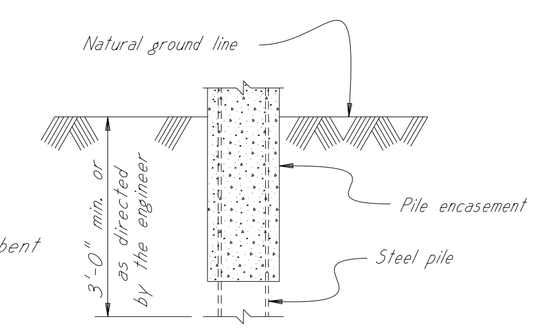

PILE ENCASEMENT DETAIL

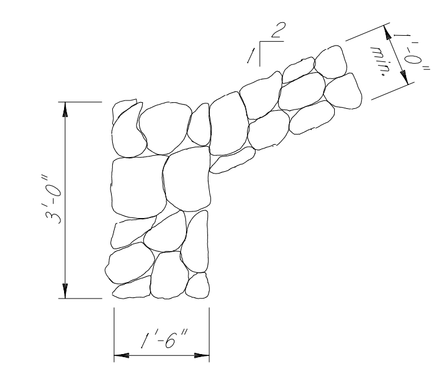

RIPRAP TOE DETAILS

GENERAL NOTES:
Mississippi Standard Specifications for Road and Bridge Construction, 2017.
No change of plans will be permitted except by written approval of the Director of Structures, State Bridge Engineer. Minor changes in detail of design or construction procedure may be authorized by the Director of Structures, State Bridge Engineer provided such changes will not be cause for contract price adjustment.
The final surface texture of the bridge deck shall be mechanically transverse grooved in accordance with Sections 501 and 804 of the specifications. See Misc. Span Details for limits of transverse grooving on bridge deck.
Bridge concrete shall be class "AA" and "BD" as indicated in plans.
Railing expansion joint material shall be bituminous fiber type unless otherwise noted.
No payment will be allowed for excavation incidental to the construction of end bents.
Bar bending details shall be in accordance with "Manual of Standard Practice for Detailing Reinforced Concrete Structures" (ACI 315R-94).
Reinforcement order lists and required placing plans shall be furnished in accordance with Section 805 of the Mississippi Standard Specifications. Partial submittals are not acceptable.
Shop drawings of prestressed beams, including an erection plan, shall be submitted in duplicate to the Director of Structures, State Bridge Engineer for approval prior to the manufacture of beams.
The Fabricator shall provide camber data at release and immediately prior to shipping.
The Contractor shall provide camber data after erection. The Contractor should be aware that the deflection diagram may be modified based on the provided camber data. Therefore, deck grades should be set only after notification from the Director of Structures, State Bridge Engineer.
Concrete surfaces shall receive a Class 2 rubbed or spray finish in accordance with the specifications.
Reinforcing steel shall be ASTM A615, Grade 60, unless otherwise noted.
Work for which no pay item is provided in the proposal will not be paid for directly and compensation therefor will be included in the prices and payments for bid items.

PILE NOTES:
Test piles shall be driven as permanent piles at the location shown in the PDA TEST PILE SCHEDULE and will be paid for as test piles only.
The Director of Structures, State Bridge Engineer may authorize test piles driven outside the structural limits.
Test piles shall be driven as a continuous operation, to the bearing capacity and the tip elevations shown in the PDA TEST PILE SCHEDULE, unless otherwise directed by the Director of Structures, State Bridge Engineer.
Permanent piles shall be driven to an elevation no higher than the elevation shown in the REQUIRED ULTIMATE PILE BEARING CAPACITY AND TIP ELEVATION SCHEDULE.
The tip elevation of piling, for hydraulic structures, may be determined by the scour line.
When feasible, bearing piles shall be driven full length and be spliced, only, as approved by the Director of Structures, State Bridge Engineer.
Welding shall be done by the ELECTRIC ARC process. Welders shall be certified and electrodes shall be approved.
When loading tests are required, the maximum test load shall be one and one half (1½) times the minimum pile bearing capacity.
PDA test piles shall require a 1 day and 7 day restrike unless otherwise directed by the Engineer.
Pile lengths and driving criteria shall be provided based on the results of the PDA test piles.
The required ultimate pile bearing shown in the REQUIRED ULTIMATE PILE BEARING AND TIP ELEVATION SCHEDULE includes the LRFD resistance factor for PDA of 0.65.
Pile hammer leads used for all PDA test piles and PDA restrikes shall be large enough to provide a minimum of 3" of clearance on each side of the pile in order to properly place and protect PDA gages.

DRAINAGE DATA:
Drainage Area . . . . . 12.3 sq. mi.
Q50 (U.S.G.S.) . . . . . 4070 cfs
Effective Area Provided . . 704.1 sq. ft.

DESIGN DATA:
Specifications . . . . . A.A.S.H.T.O. LRFD, 2014 with 2016 Interims
Loading HL-93
Roadway width . . . . . 40'-0" Gutter to gutter
Stay-in-place metal forms. . . . . 18 lbs/sf
Concrete . . . . . Class "AA" (4,000 psi)
Class "BD" (4,000 psi)
Siesmic performance zone. 1
Siesmic soil site class C
Siesmic operational class . . . . OTHER

REQUIRED ULTIMATE PILE BEARING CAPACITY AND TIP ELEVATION SCHEDULE

Bent no.	Steel piling	Req'd. bearing (tons)	Tip elevation	Estimated length	Controlling limit state	LRFD resistive factor
1R	HP 14X89	115	330.3	35	Strength 1	0.65
2R	HP 14X117	152	330.0	35	Strength 1	0.65
3R	HP 14X117	179	313.8	50	Strength 1	0.65
4R	HP 14X117	179	314.7	50	Strength 1	0.65
5R	HP 14X117	152	329.9	35	Strength 1	0.65
6R	HP 14X89	115	330.2	35	Strength 1	0.65

ESTIMATED QUANTITIES ~ RT. LN.

Item / Location	Transverse Grooving Sq. Yd.	Conventional Static Pile Load Test Each	HP 14x89 Steel Piling L.F.	HP 14x117 Steel Piling L.F.	PDA Test Pile, HP Steel Pile Each	Pile Restrike Each	Class "AA" Bridge Concrete C.Y.	Class "BD" Bridge Concrete C.Y.	40 Foot Prest. Conc. Type 1 + 2 Beam L.F.	80 Foot Prest. Conc. Type III Beam L.F.	Reinforcement Lbs.	Concrete Railing, 32" L.F.	Loose Riprap Size 300 Ton	Geotextile Under Riprap S.Y.
Spans	960.0							287.50	947.0	478.5	56996	480.00		
End Bents			665.0		1	1	47.63				8014	3.27	288.4	518.0
Int. Bents		1		935.0	2	1	96.29				9335		1915.4	1899.6
Totals	960.0	1	665.0	935.0	3	2	143.92	287.50	947.0	478.5	74345	483.27	2203.8	2417.6

500 YEAR SCOUR	
Bent No.	Elevation
1R	354.5
2R	354.5
3R	333.0
4R	333.0
5R	354.5
6R	354.5

DATE	REVISION	BY
5/9/2018	Revised Pile Size	AH

MISSISSIPPI DEPARTMENT OF TRANSPORTATION

BRIDGE AT STA. 172+89.18 RT. LN.

SR 15 OVER LAPPATUBBY CREEK BRIDGE NO. 281.7

TMS: 102607 / 303000

COUNTY: PONTOTOC

PROJECT NUMBER: STP-0022-04(063)

WORKING NUMBER A1 OF A17

SHEET NUMBER 8003

DESIGNER Adam Jackson CHECKER Spencer Yates
DETAILER Andy Hilton ISSUE DATE 12/13/2017
DIRECTOR OF STRUCTURES, STATE BRIDGE ENGINEER - JUSTIN WALKER, P.E.
DEP. DIR. OF STRUCTURES, ASST. STATE BRIDGE ENGINEER - SCOTT WESTERFIELD, P.E.

PLAN
BRIDGE DIVISION
MISSISSIPPI DEPARTMENT OF TRANSPORTATION

02: 00 AM PM DGNFILENAME