SECTION 905 -- PROPOSAL (CONTINUED)

I (We) hereby certify by digital signature and electronic submission via Bid Express of the Section 905 proposal below, that all certifications, disclosures and affidavits incorporated herein are deemed to be duly executed in the aggregate, fully enforceable and binding upon delivery of the bid proposal. I (We) further acknowledge that this certification shall not extend to the bid bond or alternate security which must be separately executed for the benefit of the Commission. This signature does not cure deficiencies in any required certifications, disclosures and/or affidavits. I (We) also acknowledge the right of the Commission to require full and final execution on any certification, disclosure or affidavit contained in the proposal at the Commission's election upon award. Failure to so execute at the Commission's request within the time allowed in the Standard Specifications for execution of all contract documents will result in forfeiture of the bid bond or alternate security.

Bidder acknowledges receipt of and has added to and made a part of the proposal and contract documents the following addendum (addenda):

ADDENDUM NO.	1	DATED	5/17/2018	ADDENDUM NO.		DATED	
ADDENDUM NO		DATED		ADDENDUM NO.		DATED	
ADDENDUM NO		DATED		ADDENDUM NO.		DATED	

Number	Description
1	Revised Table of Contents; Revised NTB Nos. 458, & 459; Added NTB No. 460; Revised Bid Items; Revised or Added Plan Sheet Nos. 2,8-10,17,3001,3004,3006,3013-3017, & 3020; Amendment EBS Download Required.

TOTAL ADDENDA: 1
(Must agree with total addenda issued prior to opening of bids)

Respectfully Submitted,

DATE _____

_____
Contractor

BY _____
Signature

TITLE _____

ADDRESS _____

CITY, STATE, ZIP _____

PHONE _____

FAX _____

E-MAIL _____

(To be filled in if a corporation)

Our corporation is chartered under the Laws of the State of _____ and the names, titles and business addresses of the executives are as follows:

_____
President Address

_____
Secretary Address

_____
Treasurer Address

The following is my (our) itemized proposal.

HSIP-0003-01(192)/ 107127301000
Hancock County(ies)

Revised 01/26/2016

For Informational Purposes Only

MISSISSIPPI DEPARTMENT OF TRANSPORTATION
TABLE OF CONTENTS

PROJECT: HSIP-0003-01(192)/107127301 - Hancock

Section 901 - Advertisement

Section 904 - Notice to Bidders

#1	Governing Specification
#2	Status of ROW, w/ Attachments
#7	Disadvantaged Business Enterprise In Federal-Aid Highway Construction, w/ Supplement
#9	Federal Bridge Formula
#10	DUNS Requirement for Federal Funded Projects
#12	MASH Compliant Devices
#113	Tack Coat
#296	Reduced Speed Limit Signs
#445	Mississippi Agent and Qualified Nonresident Agent
#458	Contract Time
#459	Specialty Items
#460	Networking Equipment
#516	Errata and Modifications to the 2017 Standard Specifications

906 Required Federal Contract Provisions -- FHWA 1273, w/Supplements

Section 907 - Special Provisions

907-102-2	Bidding Requirements and Conditions
907-103-2	Award and Execution of Contract
907-630-1	Remove and Reset Signs
907-650-2	On-Street Video Equipment
907-659-1	Traffic Management Center (TMC) Modifications
907-661-1	Fiber Optic Cable
907-663-3	Networking Equipment
907-722-1	Materials for Traffic Signal Installation

Section 905 - Proposal, Proposal Bid Items, Combination Bid Proposal
Certification of Performance - Prior Federal-Aid Contracts
Certification Regarding Non-Collusion, Debarment and Suspension
SAM.GOV Registration and DUNS Number
Section 902 - Contract Form
Section 903 - Contract Bond Forms
Form -- OCR-485

(REVISIONS TO THE ABOVE WILL BE INDICATED ON THE SECOND SHEET OF SECTION 905 AS ADDENDA)

05/16/2018 07:49 AM

MISSISSIPPI DEPARTMENT OF TRANSPORTATION

SECTION 904 - NOTICE TO BIDDERS NO. 458 **CODE: (SP)**

DATE: **05/15/2018**

SUBJECT: **Contract Time**

PROJECT: **HSIP-0003-01(192) / 107127301 – Hancock County**

The calendar date for completion of work to be performed by the Contractor for this project shall be **October 31, 2019** which date or extended date as provided in Subsection 108.06 shall be the end of contract time. It is anticipated that the Notice of Award will be issued no later than **June 12, 2018** and the effective date of the Notice to Proceed / Beginning of Contract Time will be **July 12, 2018**.

Should the Contractor request a Notice to Proceed earlier than **July 12, 2018** and it is agreeable with the Department for an early Notice to Proceed, the requested date will become the new Notice to Proceed date.

MISSISSIPPI DEPARTMENT OF TRANSPORTATION

SECTION 904 - NOTICE TO BIDDERS NO. 459

DATE: 05/17/2018

SUBJECT: Specialty Items

PROJECT: HSIP-0003-01(192)/107127301 - HANCOCK

Pursuant to the provisions of Section 108, the following work items are hereby designated as "Specialty Items" for this contract. Bidders are reminded that these items must be subcontracted in order to be considered as specialty items.

CATEGORY: CURBING, SIDEWALKS, GUTTERS

Line No	Pay Item	Description
0420	609-B002	Concrete Curb, Header
0430	609-C002	Concrete Integral Curb, Type 2
0440	609-D008	Combination Concrete Curb and Gutter Type 3A

CATEGORY: DISPOSAL OF BUILDINGS, RIGHT OF WAY CLEARING & GRUBBING

Line No	Pay Item	Description
0120	202-B240	Removal of Traffic Stripe

CATEGORY: EROSION CONTROL

Line No	Pay Item	Description
0200	216-A001	Solid Sodding
0210	219-A001	Watering
0220	221-A001	Concrete Paved Ditch
0230	223-A001	Mowing
0240	234-A001	Temporary Silt Fence
0250	237-A001	Wattles, 12"
0260	246-A002	Sandbags

CATEGORY: GUARDRAIL, GUIDERAIL

Line No	Pay Item	Description
0390	606-B001	Guard Rail, Class A, Type 1
0400	606-C003	Guard Rail, Cable Anchor, Type 1
0410	606-E007	Guard Rail, Terminal End Section, Non-Flared

CATEGORY: PAVEMENT STRIPING AND MARKING

Line No	Pay Item	Description
0520	626-A001	6" Thermoplastic Double Drop Traffic Stripe, Skip White
0530	626-A004	6" Thermoplastic Traffic Stripe, Skip White
0540	626-C001	6" Thermoplastic Double Drop Edge Stripe, Continuous White
0550	626-C003	6" Thermoplastic Edge Stripe, Continuous White
0560	626-E002	6" Thermoplastic Double Drop Traffic Stripe, Continuous Yellow

CATEGORY: PAVEMENT STRIPING AND MARKING

Line No	Pay Item	Description
0570	626-E003	6" Thermoplastic Traffic Stripe, Continuous Yellow
0580	626-G002	Thermoplastic Detail Stripe, White
0590	626-G003	Thermoplastic Detail Stripe, Yellow
0600	626-G004	Thermoplastic Double Drop Detail Stripe, White
0610	626-G005	Thermoplastic Double Drop Detail Stripe, Yellow
0620	626-H001	Thermoplastic Double Drop Legend, White
0630	626-H002	Thermoplastic Double Drop Legend, White
0640	626-H004	Thermoplastic Legend, White
0650	626-H005	Thermoplastic Legend, White
0660	627-K001	Red-Clear Reflective High Performance Raised Markers
0670	627-L001	Two-Way Yellow Reflective High Performance Raised Markers
0680	627-P001	Two-Way Blue Reflective High Performance Raised Markers

CATEGORY: TRAFFIC CONTROL - PERMANENT

Line No	Pay Item	Description
0690	630-A001	Standard Roadside Signs, Sheet Aluminum, 0.080" Thickness
0700	630-C003	Steel U-Section Posts, 3.0 lb/ft

CATEGORY: TRAFFIC CONTROL - TEMPORARY

Line No	Pay Item	Description
0462	619-A1002	Temporary Traffic Stripe, Continuous White
0464	619-A2002	Temporary Traffic Stripe, Continuous Yellow
0466	619-A5001	Temporary Traffic Stripe, Detail
0468	619-A6002	Temporary Traffic Stripe, Legend
0470	619-D1001	Standard Roadside Construction Signs, Less than 10 Square Feet
0480	619-D2001	Standard Roadside Construction Signs, 10 Square Feet or More
0490	619-G4005	Barricades, Type III, Single Faced
0500	619-G7001	Warning Lights, Type "B"

MISSISSIPPI DEPARTMENT OF TRANSPORTATION

SECTION 904 - NOTICE TO BIDDERS NO. 460

DATE: 5/15/2018

SUBJECT: Networking Equipment

PROJECT: HSIP-0003-01(192) / 107127301 – Hancock County

Bidders are hereby advised that the following additional requirements for Networking Equipment shall be required on this project. Work and materials not paid for under other pay items shall be included in the price bid for Pay Item Number 907-663-A.

Networking Equipment:
To provide synchronization with existing network equipment, contractor shall supply Cisco Industrial Ethernet Switches.

For the Type A switch, supply Cisco Industrial Ethernet 2000 Series Switches Model IE-2000-8TC-G-8-B Ethernet Switch (CON-SNT-IE2K8TCG) (SNTC-8X5XNBD IE 8 10/100, 2 T/SFP)

For the Type B switch, supply Cisco Industrial Ethernet 2000 Series Switches Model IE-2000-16TC-G-E Ethernet Switch (CON-SNT-IE2001E) (SNTC-8X5XNBD IE 16 10/100, 2 FE/SF)

For the Type E switch, supply Cisco Industrial Ethernet (IE) 4010 Switch model IE-4010-16S12P Ethernet Switch (CON-SNT-IE401016S)(SNTC-8X5XNBD IE 4010 16x1GSFP 100/1000M, 2D-IE/1GB)

The Contractor is responsible for registering the switches with the switch manufacturer in MDOT's specified account name. As such, following receipt of project submittal approval, and prior to ordering switches, The Contractor shall be required to contact MDOT Information Systems (IS) so that the Networking equipment to be ordered is established in MDOT's name for maintenance and support purposes.

The Contractor shall also ship the E switch to MDOT IS at least two (2) months before desired installation. Switch shall be shipped to:

MDOT Information Systems Division
Attn: Kerby McFarland
MDOT Administration Building
401 North West Street
Jackson, MS 39201

MDOT Information Systems Division will be responsible for configuring E switches and delivering back to the Contractor for installation.

Traffic Signal Improvements on US 90 from Waveland Avenue to Beach Boulevard, known as Federal Aid Project No. HSIP-0003-01(192) / 107127301 in Hancock County.

Line No.	Item Code	Adj Code	Quantity	Units	Description [Fixed Unit Price]
			Roadway Items		
0010	201-A001		1	Lump Sum	Clearing and Grubbing
0020	202-B004		31	Square Yard	Removal of Asphalt Driveways, All Depths
0030	202-B081		162	Square Yard	Removal of Concrete Sidewalks & Driveways, All Depths
0040	202-B089		8,991	Linear Feet	Removal of Curb &/or Curb and Gutter, All Types
0050	202-B163		1	Each	Removal of Inlet Tops
0060	202-B171		3,140	Linear Feet	Removal of Legend, All Types
0070	202-B172		1,015	Square Feet	Removal of Legend, All Types
0080	202-B178		24	Each	Removal of Low Mast Lighting Assembly and Foundation
0090	202-B195		41	Each	Removal of Pull Box
0100	202-B202		35	Square Yard	Removal of Reinforced Concrete Pavement, 9" Depth
0110	202-B215		3	Each	Removal of Sign Including Post & Footing
0120	202-B240		12,583	Linear Feet	Removal of Traffic Stripe
0130	202-B258		8,022	Linear Feet	Removal of Wiring
0140	203-A001	(E)	2,431	Cubic Yard	Unclassified Excavation, FM, AH
0150	203-EX040	(E)	452	Cubic Yard	Borrow Excavation, AH, LVM, Class B9
0160	203-G001	(E)	2,430	Cubic Yard	Excess Excavation, FM, AH
0170	206-A001	(S)	1	Cubic Yard	Structure Excavation
0180	209-A005		8,992	Square Yard	Geotextile Stabilization, Type V, Non-Woven
0190	211-B001	(E)	50	Cubic Yard	Topsoil for Slope Treatment, Contractor Furnished
0200	216-A001		1,575	Square Yard	Solid Sodding
0210	219-A001		22	Thousand Gallon	Watering [$20.00]
0220	221-A001	(S)	1	Cubic Yard	Concrete Paved Ditch
0230	223-A001		1	Acre	Mowing [$50.00]
0240	234-A001		200	Linear Feet	Temporary Silt Fence
0250	237-A001		100	Linear Feet	Wattles, 12"
0260	246-A002		25	Each	Sandbags
0270	403-A002	(BA1)	472	Ton	12.5-mm, MT, Asphalt Pavement
0280	403-A014	(BA1)	1,304	Ton	9.5-mm, MT, Asphalt Pavement
0290	406-D001		14,293	Square Yard	Fine Milling of Bituminous Pavement, All Depths
0300	407-A001	(A2)	786	Gallon	Asphalt for Tack Coat
0310	501-B007	(C)	6,272	Square Yard	9" Plain Cement Concrete Pavement, Drag Finish
0320	501-D001		3,491	Linear Feet	Expansion Joints, With Dowels

Line No.	Item Code	Adj Code	Quantity	Units	Description [Fixed Unit Price]
0330	501-G001		2,796	Each	Dowels, Drilled and Installed
0340	503-C010		8,023	Linear Feet	Saw Cut, Full Depth
0350	503-E002		2,603	Each	Tie Bars, No. 5 Deformed Drilled and Epoxied or Grouted
0360	601-B001	(S)	1	Cubic Yard	Class "B" Structural Concrete, Minor Structures
0370	602-A001	(S)	160	Pounds	Reinforcing Steel
0380	604-A001		79	Pounds	Castings
0390	606-B001		267	Linear Feet	Guard Rail, Class A, Type 1
0400	606-C003		1	Each	Guard Rail, Cable Anchor, Type 1
0410	606-E007		1	Each	Guard Rail, Terminal End Section, Non-Flared
0420	609-B002	(S)	1,659	Linear Feet	Concrete Curb, Header
0430	609-C002	(S)	6,500	Linear Feet	Concrete Integral Curb, Type 2
0440	609-D008	(S)	1,448	Linear Feet	Combination Concrete Curb and Gutter Type 3A
0450	616-A001	(S)	844	Square Yard	Concrete Median and/or Island Pavement, 10-inch
0460	618-A001		1	Lump Sum	Maintenance of Traffic
0462	619-A1002		2,539	Linear Feet	Temporary Traffic Stripe, Continuous White
0464	619-A2002		5,894	Linear Feet	Temporary Traffic Stripe, Continuous Yellow
0466	619-A5001		7,886	Linear Feet	Temporary Traffic Stripe, Detail
0468	619-A6002		2,453	Linear Feet	Temporary Traffic Stripe, Legend
0470	619-D1001		32	Square Feet	Standard Roadside Construction Signs, Less than 10 Square Feet
0480	619-D2001		1,064	Square Feet	Standard Roadside Construction Signs, 10 Square Feet or More
0490	619-G4005		48	Linear Feet	Barricades, Type III, Single Faced
0500	619-G7001		4	Each	Warning Lights, Type "B"
0510	620-A001		1	Lump Sum	Mobilization
0520	626-A001		8	Mile	6" Thermoplastic Double Drop Traffic Stripe, Skip White
0530	626-A004		3	Mile	6" Thermoplastic Traffic Stripe, Skip White
0540	626-C001		34,078	Linear Feet	6" Thermoplastic Double Drop Edge Stripe, Continuous White
0550	626-C003		13,629	Linear Feet	6" Thermoplastic Edge Stripe, Continuous White
0560	626-E002		19,518	Linear Feet	6" Thermoplastic Double Drop Traffic Stripe, Continuous Yellow
0570	626-E003		13,472	Linear Feet	6" Thermoplastic Traffic Stripe, Continuous Yellow
0580	626-G002		16,136	Linear Feet	Thermoplastic Detail Stripe, White
0590	626-G003		3,388	Linear Feet	Thermoplastic Detail Stripe, Yellow
0600	626-G004		44,668	Linear Feet	Thermoplastic Double Drop Detail Stripe, White
0610	626-G005		16,014	Linear Feet	Thermoplastic Double Drop Detail Stripe, Yellow
0620	626-H001		2,526	Square Feet	Thermoplastic Double Drop Legend, White

Line No.	Item Code	Adj Code	Quantity	Units	Description [Fixed Unit Price]
0630	626-H002		3,477	Linear Feet	Thermoplastic Double Drop Legend, White
0640	626-H004		2,548	Square Feet	Thermoplastic Legend, White
0650	626-H005		5,733	Linear Feet	Thermoplastic Legend, White
0660	627-K001		1,793	Each	Red-Clear Reflective High Performance Raised Markers
0670	627-L001		103	Each	Two-Way Yellow Reflective High Performance Raised Markers
0680	627-P001		103	Each	Two-Way Blue Reflective High Performance Raised Markers
0690	630-A001		92	Square Feet	Standard Roadside Signs, Sheet Aluminum, 0.080" Thickness
0700	630-C003		137	Linear Feet	Steel U-Section Posts, 3.0 lb/ft
0710	632-A007		2	Each	Solid State Traffic Cabinet Assembly, Type III Cabinet, Type 1 Controller
0720	632-B008		8	Each	Remove and Replace Existing Traffic Signal Cabinet Assembly, Type III Cabinet, Type 1 Controller
0730	634-A170		1	Each	Traffic Signal Equipment Pole, Type VI, 8' Shaft
0740	634-A242		1	Each	Traffic Signal Equipment Pole, Type II(L), 30' Shaft, 35' Arm
0750	634-A243		1	Each	Traffic Signal Equipment Pole, Type II(L), 30' Shaft, 40' Arm
0760	634-A247		3	Each	Traffic Signal Equipment Pole, Type II(L), 30' Shaft, 60' Arm
0770	634-A248		5	Each	Traffic Signal Equipment Pole, Type II(L), 30' Shaft, 65' Arm
0780	634-A249		4	Each	Traffic Signal Equipment Pole, Type II(L), 30' Shaft, 70' Arm
0790	634-A250		2	Each	Traffic Signal Equipment Pole, Type II(L), 30' Shaft, 75' Arm
0800	634-A541		1	Each	Traffic Signal Equipment Pole, Type III(L), 30' Shaft, 55' & 65' Arm
0810	634-C006		68	Cubic Yard	Pole Foundations, Class "DS" Concrete
0820	634-D003		255	Linear Feet	Slip Casing, 36" Diameter
0830	634-E001		2	Each	Camera Pole with Foundation, 50' Pole
0840	635-A059		58	Each	Traffic Signal Head, Type 1
0850	635-A060		10	Each	Traffic Signal Head, Type 1A
0860	635-A065		18	Each	Traffic Signal Head, Type 2 FYA
0870	635-A066		5	Each	Traffic Signal Head, Type 2A FYA
0880	635-A070		12	Each	Traffic Signal Head, Type 3
0890	635-A071		1	Each	Traffic Signal Head, Type 3A
0900	635-A073		1	Each	Traffic Signal Head, Type 4
0910	635-A076		4	Each	Traffic Signal Head, Type 6
0920	636-B005		2,553	Linear Feet	Electric Cable, Underground in Conduit, IMSA 20-1, AWG 10, 2 Conductor
0930	636-B016		700	Linear Feet	Electric Cable, Underground in Conduit, IMSA 20-1, AWG 14, 5 Conductor
0940	636-B018		5,304	Linear Feet	Electric Cable, Underground in Conduit, IMSA 20-1, AWG 14, 8 Conductor
0950	636-B029		441	Linear Feet	Electric Cable, Underground in Conduit, IMSA 20-1, AWG 8, 3 Conductor

Line No.	Item Code	Adj Code	Quantity	Units	Description [Fixed Unit Price]
0960	636-D001		925	Linear Feet	Electric Cable, Aerial Supported in Conduit, IMSA 20-1, AWG 10, 2 Conductor
0970	636-D005		40	Linear Feet	Electric Cable, Aerial Supported in Conduit, IMSA 20-1, AWG 14, 5 Conductor
0980	636-D012		90	Linear Feet	Electric Cable, Aerial Supported in Conduit, IMSA 20-1, AWG 8, 3 Conductor
0990	636-D021		3,125	Linear Feet	Electric Cable, Aerial Supported in Conduit, IMSA 20-1, AWG 14, 8 Conductor
1000	637-A009		9	Each	Pull Box Enclosure, Type 2, Tier 22
1010	637-A011		8	Each	Pull Box Enclosure, Type 3, Tier 22
1020	637-A013		19	Each	Pull Box Enclosure, Type 4, Tier 22
1030	637-A015		23	Each	Pull Box Enclosure, Type 5, Tier 22
1040	637-C026		268	Linear Feet	Traffic Signal Conduit, Underground, Type 4, 1"
1050	637-C028		658	Linear Feet	Traffic Signal Conduit, Underground, Type 4, 2"
1060	637-C030		435	Linear Feet	Traffic Signal Conduit, Underground, Type 4, 3"
1070	637-D002		2,446	Linear Feet	Traffic Signal Conduit, Underground Drilled or Jacked, Rolled Pipe, 2"
1080	637-D003		1,756	Linear Feet	Traffic Signal Conduit, Underground Drilled or Jacked, Rolled Pipe, 3"
1090	637-I001		31,422	Linear Feet	Traffic Signal Conduit Bank, Underground, Drilled or Jacked, Rolled Pipe, 2 @ 2"
1100	639-B001		40	Each	Optical Detector
1110	639-C001		10	Each	Multimode Phase Selector
1120	639-E001		7,376	Linear Feet	Optical Detector Cable
1130	643-A003		20	Each	Video Detection System, 1 Sensor, Type 2
1140	643-E001		20	Each	Multi-Sensor Detection System, 1 Sensor
1150	645-B001		4	Each	Accessible Pedestrian Detection Assembly
1160	647-A001		1	Lump Sum	Removal of Existing Traffic Signal Equipment
1170	653-B003		385	Square Feet	Street Name Sign, Type III
1180	656-A002		1	Each	Dynamic Message Sign, Type 2
1190	656-A003		2	Each	Dynamic Message Sign, Type 3
1210	660-A003		2	Each	Equipment Cabinet, Type B
1220	660-A004		1	Each	Equipment Cabinet, Type C
1230	660-B001		12	Each	Cabinet Modifications
1240	907-630-L001		1	Lump Sum	Pedestal Sign Support, Assembly No 1, Contractor Designed DMS Type 2
1250	907-630-M002		1	Lump Sum	Post Sign Support, Assembly No 2, Contractor Designed DMS Type 3
1260	907-630-M003		1	Lump Sum	Post Sign Support, Assembly No 3, Contractor Designed DMS Type 3
1270	907-650-A002		8	Each	On Street Video Equipment, Fixed Type
1280	907-650-A003		8	Each	On Street Video Equipment, PTZ Type

Line No.	Item Code	Adj Code	Quantity	Units	Description [Fixed Unit Price]
1290	907-659-A001		1	Lump Sum	Traffic Management Center Modifications
1300	907-661-A004		29,917	Linear Feet	Fiber Optic Cable, 72 SM
1310	907-661-B002		1,601	Linear Feet	Fiber Optic Drop Cable, 12 SM
1320	907-663-A001		12	Each	Network Switch, Type A
1330	907-663-A002		2	Each	Network Switch, Type B
1340	907-663-A005		1	Each	Network Switch, Type E
			ALTERNATE GROUP AA NUMBER 1		
1350	304-F001	(GT)	3,240	Ton	3/4" and Down Crushed Stone Base
			ALTERNATE GROUP AA NUMBER 2		
1360	304-F002	(GT)	3,240	Ton	Size 610 Crushed Stone Base
			ALTERNATE GROUP AA NUMBER 3		
1370	304-F003	(GT)	3,240	Ton	Size 825B Crushed Stone Base

ADDENDUM

STATE	PROJECT NO.
MISS.	HSIP-0003-01(192)

DESCRIPTION OF SHEET	WKG. NO.	SH. NO.
ROADWAY		
TITLE SHEET	TITLE	1
DETAILED INDEX & GENERAL NOTES (3)		
DETAILED INDEX (ROADWAY)	DI-1	2
DETAILED INDEX (ROADWAY)	DI-2	3
GENERAL NOTES (ROADWAY)	GN-1	4
TYPICAL SECTION SHEETS (2)		
TYPICAL SECTION - US HWY 90 (CONCRETE)	TS-1	5
TYPICAL SECTION - US HWY 90 (ASPHALT)	TS-2	6
QUANTITY SHEETS (12)		
SUMMARY OF QUANTITIES	SQ-1	7
SUMMARY OF QUANTITIES	SQ-2	8
SUMMARY OF QUANTITIES	SQ-3	9
SUMMARY OF QUANTITIES	SQ-4	10
ESTIMATED QUANTITIES - REMOVAL: CURB AND PAVEMENT	EQ-1	11
ESTIMATED QUANTITIES - REMOVAL: ELECTRICAL ITEMS	EQ-2	12
ESTIMATED QUANTITIES - CURB AND PAVEMENT REQ'D.	EQ-3	13
ESTIMATED QUANTITIES - DOWELS AND MEDIAN ISLAND PAVEMENT REQ'D.	EQ-4	14
ESTIMATED QUANTITIES - DRAINAGE STRUCTURES & GUARDRAIL REQ'D.	EQ-5	15
ESTIMATED QUANTITIES - PAVEMENT MARKINGS, SIGNS AND ASSEMBLIES REQ'D.	EQ-6	16
ESTIMATED QUANTITIES - TRAFFIC SIGNALS AND ITS COMPONENTS REQ'D.	EQ-7	17
ESTIMATED QUANTITIES - TRAFFIC CONTROL SIGNS	EQ-8	18
CONSTRUCTION SIGNING/TRAFFIC CONTROL SHEETS (3)		
DETAIL OF CONSTRUCTION SIGNING	DCS-1	19
DETAIL OF CONSTRUCTION SIGNING	DCS-2	20
TRAFFIC CONTROL NOTES	TC-1	21
INTERSECTION DETAIL SHEETS (10)		
US HWY 90 AT WAVELAND AVE. / KILN-WAVELAND CUTOFF RD.	ID-1	22
US HWY 90 AT WAL-MART WEST ENTRANCE	ID-2	23
US HWY 90 AT MS HWY 43	ID-3	24
US HWY 90 AT McLAURIN ST.	ID-4	25
US HWY 90 AT BOUSLOG RD.	ID-5	26
US HWY 90 AT WASHINGTON ST.	ID-6	27
US HWY 90 AT DRINKWATER BLVD.	ID-7	28
US HWY 90 AT BLUE MEADOW RD.	ID-8	29
US HWY 90 AT DUNBAR AVE.	ID-9	30
US HWY 90 AT BEACH BLVD.	ID-10	31
EROSION CONTROL PLAN SHEETS (10)		
US HWY 90 AT WAVELAND AVE. / KILN-WAVELAND CUTOFF RD.	ECP-1	32
US HWY 90 AT WAL-MART WEST ENTRANCE	ECP-2	33
US HWY 90 AT MS HWY 43	ECP-3	34
US HWY 90 AT McLAURIN ST.	ECP-4	35
US HWY 90 AT BOUSLOG RD.	ECP-5	36
US HWY 90 AT WASHINGTON ST.	ECP-6	37
US HWY 90 AT DRINKWATER BLVD.	ECP-7	38
US HWY 90 AT BLUE MEADOW RD.	ECP-8	39
US HWY 90 AT DUNBAR AVE.	ECP-9	40
US HWY 90 AT BEACH BLVD.	ECP-10	41
PERMANENT PAVEMENT MARKING SHEETS (10)		
US HWY 90 AT WAVELAND AVE. / KILN-WAVELAND CUTOFF RD.	PMD-1	42
US HWY 90 AT WAL-MART WEST ENTRANCE	PMD-2	43
US HWY 90 AT MS HWY 43	PMD-3	44
US HWY 90 AT McLAURIN ST.	PMD-4	45
US HWY 90 AT BOUSLOG RD.	PMD-5	46
US HWY 90 AT WASHINGTON ST.	PMD-6	47
US HWY 90 AT DRINKWATER BLVD.	PMD-7	48
US HWY 90 AT BLUE MEADOW RD.	PMD-8	49
US HWY 90 AT DUNBAR AVE.	PMD-9	50
US HWY 90 AT BEACH BLVD.	PMD-10	51
MISCELLANEOUS ROADWAY ITEMS (1)		
VEGETATION SCHEDULE - DISTRICT 6 OR 7 - URBAN - ALL TYPES PROJECTS	VS-1	52
PERMANENT SIGNING SHEETS (4)		
PERMANENT SIGNS	PSP-1	1001
PERMANENT SIGNS	PSP-2	1002
STREET NAME SIGNS	SNS-1	1003
STREET NAME SIGNS	SNS-2	1004

PS & E PLANS 9/06/2017		
FMS CON. # 107127/301000		
REVISIONS		
DATE	SHEET NO.	BY
04/18/18	1, 7	WRT
05/16/18	8, 9, 10, 17, 3001, 3004, 3006, 3013, 3014, 3015, 3016, 3017, 3020	WRT
	TICE	

W. RYAN TICE
LICENSED PROFESSIONAL ENGINEER
15169
STATE OF MISSISSIPPI

DATE: 9/06/2017

MISSISSIPPI DEPARTMENT OF TRANSPORTATION

DETAILED INDEX

COUNTY: HANCOCK

PROJ. NO.: HSIP-0003-01(192)

WORKING NUMBER DI-1

SHEET NUMBER 2

FILENAME: DI_SH.DGN

DESIGN TEAM TICE ENG. CHECKED WRT DATE 04/18/18

DATE | REVISION | BY

PLAN
ROADWAY DESIGN DIVISION
MISSISSIPPI DEPARTMENT OF TRANSPORTATION

5/16/2018 1:6:27:06 DI_SH.DGN

ADDENDUM

STATE	PROJECT NO.
MISS	HSIP-0003-01(192)

SUMMARY OF QUANTITIES (SHEET 2)

PAY ITEM NO.	PAY ITEM	UNIT	HANCOCK : 107127-301000		
			Prelim	Final	
503-E002	Tie Bars, No. 5 Deformed Drilled and Epoxied or Grouted	EA	2,603		
601-B001	Class "B" Structural Concrete, Minor Structures	CY	1		
602-A001	Reinforcing Steel	LBS	160		
604-A001	Castings	LBS	79		
606-B001	Guard Rail, Class A, Type 1	LF	267		
606-C003	Guard Rail, Cable Anchor, Type 1	EA	1		
606-E007	Guard Rail, Terminal End Section, Non-Flared	EA	1		
609-B002	Concrete Curb, Header	LF	1,659		
609-C002	Concrete Integral Curb, Type 2	LF	6,500		
609-D008	Combination Concrete Curb and Gutter Type 3A	LF	1,448		
616-A001	Concrete Median and/or Island Pavement, 10-inch	SY	844		
618-A001	Maintenance of Traffic	LS	1		1
619-A1002	Temporary Traffic Stripe, Continuous White	LF	2,539		1
619-A2002	Temporary Traffic Stripe, Continuous Yellow	LF	5,894		1
619-A5001	Temporary Traffic Stripe, Detail	LF	7,886		1
619-A6002	Temporary Traffic Stripe, Legend	LF	2,453		1
619-D1001	Standard Roadside Construction Signs, Less than 10 Square Feet	SF	32		
619-D2001	Standard Roadside Construction Signs, 10 Square Feet or More	SF	1,064		
619-G4005	Barricades, Type III, Single Faced	LF	48		
619-G7001	Warning Lights, Type "B"	EA	4		
620-A001	Mobilization	LS	1		
626-A001	6" Thermoplastic Double Drop Traffic Stripe, Skip White	MI	8		
626-A004	6" Thermoplastic Traffic Stripe, Skip White	MI	3		
626-C001	6" Thermoplastic Double Drop Edge Stripe, Continuous White	LF	34,078		
626-C003	6" Thermoplastic Edge Stripe, Continuous White	LF	13,629		
626-E002	6" Thermoplastic Double Drop Traffic Stripe, Continuous Yellow	LF	19,518		
626-E003	6" Thermoplastic Traffic Stripe, Continuous Yellow	LF	13,472		
626-G002	Thermoplastic Detail Stripe, White	LF	16,136		
626-G003	Thermoplastic Detail Stripe, Yellow	LF	3,388		4
626-G004	Thermoplastic Double Drop Detail Stripe, White	LF	44,668		4
626-G005	Thermoplastic Double Drop Detail Stripe, Yellow	LF	16,014		4
626-H001	Thermoplastic Double Drop Legend, White	SF	2,526		
626-H002	Thermoplastic Double Drop Legend, White	LF	3,477		4
626-H004	Thermoplastic Legend, White	SF	2,548		
626-H005	Thermoplastic Legend, White	LF	5,733		4
627-K001	Red-Clear Reflective High Performance Raised Markers	EA	1,793		
627-L001	Two-Way Yellow Reflective High Performance Raised Markers	EA	103		
627-P001	Two-Way Blue Reflective High Performance Raised Markers	EA	103		5
630-A001	Standard Roadside Signs, Sheet Aluminum, 0.080" Thickness	SF	92		
630-C003	Steel U-Section Posts, 3.0 lb/ft	LF	137		
907-630-L001	Pedestal Sign Support, Assembly No 1, Contractor Designed DMS TYPE 2	LS	1		3
907-630-M002	Post Sign Support, Assembly No 2, Contractor Designed DMS TYPE 3	LS	1		2
907-630-M003	Post Sign Support, Assembly No 3, Contractor Designed DMS TYPE 3	LS	1		7
632-A007	Solid State Traffic Cabinet Assembly, Type III Cabinet, Type 1 Controller	EA	2		6

1. PRICE BID SHALL INCLUDE ALL TRAFFIC CONTROL ELEMENTS NEEDED TO MEET MUTCD AND MDOT TRAFFIC CONTROL REQUIREMENTS. REFER TO TRAFFIC CONTROL PLAN SHEETS, NOTES AND DETAILS.
2. THIS ITEM FOR 1 COMPLETE DMS TYPE 3 POST STYLE FOUNDATIONS (CONTRACTOR DESIGNED) AT STA. 61+00.
3. THIS ITEM IS FOR A COMPLETE DMS 2 PEDESTAL SUPPORT ASSEMBLY (CONTRACTOR DESIGNED) AT STA. 23+00 HWY. 43/603.
4. MEASURED IN EQUIVALENT 6" WIDTHS.
5. TO BE PLACED AS DIRECTED BY THE ENGINEER.
6. LOCATED AT BOUSLOG AND WASHINGTON. ALL EQUIPMENT SHALL BE NEW, INCLUDING MMU2,GPS CLOCK NOT REQUIRED. CONTROLLER CABINET SHALL HAVE A 30 AMP MAIN BREAKER AND A THIRD AUXILIARY BREAKER IF A CAMERA PANEL IS CALLED FOR IN THE PLANS. CABINET SHALL HAVE A DETECTOR CARD RACK WITH 5 SLOT POSITIONS AND WILL NOT REQUIRE 2 ADDITIONAL PREEMPTION SLOTS TO THE RIGHT. SIGNAL CONTROLLER SHALL BE ECOMM COMPATIBLE. POWER SERVICE PANELS SHALL BE GROUND MOUNTED PEDESTALS, AS SPECIFIED IN SECTION 722.13.3, EXCEPT THEY SHALL BE NON-PAINTED ALUMINUM, RATHER THAN LIGHT GREEN.
7. THIS ITEM FOR 1 COMPLETE DMS TYPE 3 POST STYLE FOUNDATIONS (CONTRACTOR DESIGNED) AT STA. 106+00.

1

Date	Revision	By
05/17/2018	ITS-2, ITS-4, ITS-11 Plan Revisions	CR

MISSISSIPPI DEPARTMENT OF TRANSPORTATION
SUMMARY OF QUANTITIES

Proj No: HSIP-0003-01(192)
County: HANCOCK

FILENAME : SQS_ADD01.DGN
Design Team Tice Checked WRT Date 05/17/2

Working Number: SQ-2
Sheet Number: 8

ADDENDUM

STATE	PROJECT NO.
MISS	HSIP-0003-01(192)

SUMMARY OF QUANTITIES (SHEET 3)

PAY ITEM NO.	PAY ITEM	UNIT	HANCOCK : 107127-301000		
			Prelim	Final	
632-B008	Remove and Replace Existing Traffic Signal Cabinet Assembly, Type III Cabinet, Type 1 Controller	EA	8		5
634-A170	Traffic Signal Equipment Pole, Type VI, 8' Shaft	EA	1		6
634-A242	Traffic Signal Equipment Pole, Type II(L), 30' Shaft, 35' Arm	EA	1		6
634-A243	Traffic Signal Equipment Pole, Type II(L), 30' Shaft, 40' Arm	EA	1		6
634-A247	Traffic Signal Equipment Pole, Type II(L), 30' Shaft, 60' Arm	EA	3		6
634-A248	Traffic Signal Equipment Pole, Type II(L), 30' Shaft, 65' Arm	EA	5		6
634-A249	Traffic Signal Equipment Pole, Type II(L), 30' Shaft, 70' Arm	EA	4		6
634-A250	Traffic Signal Equipment Pole, Type II(L), 30' Shaft, 75' Arm	EA	2		6
634-A541	Traffic Signal Equipment Pole, Type III(L), 30' Shaft, 55' & 65' Arm	EA	1		6
634-C006	Pole Foundations, Class "DS" Concrete	CY	68		
634-D003	Slip Casing, 36" Diameter	LF	255		
634-E001	Camera Pole with Foundation, 50' Pole	EA	2		
635-A059	Traffic Signal Head, Type 1	EA	58		
635-A060	Traffic Signal Head, Type 1A	EA	10		
635-A065	Traffic Signal Head, Type 2 FYA	EA	18		
635-A066	Traffic Signal Head, Type 2A FYA	EA	5		
635-A070	Traffic Signal Head, Type 3	EA	12		
635-A071	Traffic Signal Head, Type 3A	EA	1		
635-A073	Traffic Signal Head, Type 4	EA	1		
635-A076	Traffic Signal Head, Type 6	EA	4		
636-B005	Electric Cable, Underground in Conduit, IMSA 20-1, AWG 10, 2 Conductor	LF	2,553		11
636-B016	Electric Cable, Underground in Conduit, IMSA 20-1, AWG 14, 5 Conductor	LF	700		7
636-B018	Electric Cable, Underground in Conduit, IMSA 20-1, AWG 14, 8 Conductor	LF	5,304		7
636-B029	Electric Cable, Underground in Conduit, IMSA 20-1, AWG 8, 3 Conductor	LF	441		9
636-D001	Electric Cable, Aerial Supported in Conduit, IMSA 20-1, AWG 10, 2 Conductor	LF	925		12
636-D005	Electric Cable, Aerial Supported in Conduit, IMSA 20-1, AWG 14, 5 Conductor	LF	40		8
636-D012	Electric Cable, Aerial Supported in Conduit, IMSA 20-1, AWG 8, 3 Conductor	LF	90		10
636-D021	Electric Cable, Aerial Supported in Conduit, IMSA 20-1, AWG 14, 8 Conductor	LF	3,125		4
637-A009	Pull Box Enclosure, Type 2, Tier 22	EA	9		1
637-A011	Pull Box Enclosure, Type 3, Tier 22	EA	8		
637-A013	Pull Box Enclosure, Type 4, Tier 22	EA	19		1 2
637-A015	Pull Box Enclosure, Type 5, Tier 22	EA	23		1 2 3
637-C026	Traffic Signal Conduit, Underground, Type 4, 1"	LF	268		13
637-C028	Traffic Signal Conduit, Underground, Type 4, 2"	LF	658		13
637-C030	Traffic Signal Conduit, Underground, Type 4, 3"	LF	435		13
637-D002	Traffic Signal Conduit, Underground Drilled or Jacked, Rolled Pipe, 2"	LF	2,446		13
637-D003	Traffic Signal Conduit, Underground Drilled or Jacked, Rolled Pipe, 3"	LF	1,756		13 1
637-I001	Traffic Signal Conduit Bank, Underground, Drilled or Jacked, Rolled Pipe, 2 @ 2"	LF	31,422		1
639-B001	Optical Detector	EA	40		
639-C001	Multimode Phase Selector	EA	10		
639-E001	Optical Detector Cable	LF	7,376		
643-A003	Video Detection System, 1 Sensor, Type 2	EA	20		14
643-E001	Multi-Sensor Detection System, 1 Sensor	EA	20		14
645-B001	Accessible Pedestrian Detection Assembly	EA	4		15

1. QUANTITY DOES NOT INCLUDE 8 TONS OF GRAVEL FOR TYPE 2 PULL BOXES, 32 TONS OF GRAVEL FOR TYPE 4 PULL BOXES OR 50 TONS OF GRAVEL FOR TYPE 5 PULL BOXES. THESE AMOUNTS ARE COST ABSORBED WITH THE PULL BOXES.
2. TO BE USED IN CONJUNCTION WITH FIBER OPTIC AND OTHER COMMUNICATION CABLES.
3. SPLICE CLOSURES TO ONLY BE INSTALLED INSIDE TYPE 5 PULL BOXES (COST ABSORBED). SEE PLANS AND DETAILS FOR SPLICE LOCATIONS.
4. MEASURED VERTICALLY ALONG THE MAST ARM POLE AND HORIZONTALLY ALONG THE MAST ARM.
5. REUSE EXISTING CABINET FOUNDATION. ALL OTHER EQUIPMENT SHALL BE NEW, INCLUDING MMU2. GPS CLOCK NOT REQUIRED. CONTROLLER CABINET SHALL HAVE A 30 AMP MAIN BREAKER AND A THIRD AUXILIARY BREAKER IF A CAMERA PANEL IS CALLED FOR IN THE PLANS. CABINET SHALL HAVE A DETECTOR CARD RACK WITH A 5 SLOT POSITIONS AND WILL NOT REQUIRE 2 ADDITIONAL PREEMPTION SLOTS TO THE RIGHT. SIGNAL CONTROLLER SHALL BE ECOMM COMPATIBLE. POWER SERVICE PANELS SHALL BE GROUND MOUNTED PEDESTALS, AS SPECIFIED IN SECTION 722.13.3, EXCEPT THEY SHALL BE NON-PAINTED ALUMINUM, RATHER THAN LIGHT GREEN.
6. REINFORCED HANDHOLE SHALL BE A MINIMUM NOMINAL SIZE OF 4"X26". POLES TO BE DESIGNED TO 140 MPH. LUMINAIRES, AS SPECIFIED IN THE PLANS, SHALL BE COST ABSORBED.
7. MEASURED UNDERGROUND HORIZONTALLY ALONG THE CONDUIT ONLY IN THE HORIZONTAL PLANE. NO ADDITIONAL QUANTITY SHALL BE ADDED FOR DEPTH OR CHANGE IN ELEVATION.
8. MEASURED VERTICALLY ALONG THE SIGNAL POLE.
9. SIGNAL POWER CABLE. MEASURED UNDERGROUND HORIZONTALLY ALONG THE CONDUIT ONLY IN THE HORIZONTAL PLANE.NO ADDITIONAL QUANTITY SHALL BE ADDED FOR DEPTH OR CHANGE IN ELEVATION.
10. SIGNAL POWER CABLE. MEASURED VERTICALLY ALONG THE SIGNAL/SERVICE POLE.
11. LUMINAIRE POWER CABLE. MEASURED UNDERGROUND HORIZONTALLY ALONG THE CONDUIT ONLY IN THE HORIZONTAL PLANE. NO ADDITIONAL QUANTITY SHALL BE ADDED FOR DEPTH OR CHANGE IN ELEVATION.
12. LUMINAIRE POWER CABLE. MEASURED VERTICALLY ALONG THE SIGNAL/SERVICE POLE.
13. MEASURED FROM CENTER TO CENTER OF PULLBOX AND/OR FOUNDATION. MEASUREMENT OF UNDERGROUND CONDUIT SHALL BE ONLY IN THE HORIZONTAL PLANE. NO ADDITIONAL QUANTITY SHALL BE ADDED FOR DEPTH OR CHANGE IN ELEVATION. TRACER WIRE, MARKING TAPE,AND CONDUIT DETECTION WIRE ARE NOT REQUIRED, UNLESS SPECIFICALLY CALLED OUT IN THE PLANS.
14. ALL NECESSARY POWER/COMMUNICATION CABLING TO BE COST ABSORBED.
15. LOCATED AT DUNBAR AVE. AND BEACH BLVD.

1

Date	Revision	By
05/17/2018	ITS-2, ITS-4, ITS-11 Plan Revisions	CR

MISSISSIPPI DEPARTMENT OF TRANSPORTATION
SUMMARY OF QUANTITIES

Proj No: HSIP-0003-01(192)
County: HANCOCK

FILENAME : SQS_ADD01.DGN
Design Team Tice Checked WRT Date 05/17/2

Working Number SQ-3
Sheet Number 9

STATE	PROJECT NO.
MISS	HSIP-0003-01(192)

ADDENDUM

SUMMARY OF QUANTITIES (SHEET 4)

PAY ITEM NO.	PAY ITEM	UNIT	HANCOCK : 107127-301000 Prelim	Final	
647-A001	Removal of Existing Traffic Signal Equipment	LS	1		5
907-650-A002	On Street Video Equipment, Fixed Type	EA	8		4
907-650-A003	On Street Video Equipment, PTZ Type	EA	8		4
653-B003	Street Name Sign, Type III	SF	385		
656-A002	Dynamic Message Sign, Type 2	EA	1		1
656-A003	Dynamic Message Sign, Type 3	EA	2		1
907-659-A001	Traffic Management Center Modifications	LS	1		
660-A002	Equipment Cabinet, Type A	EA	0		1
660-A003	Equipment Cabinet, Type B	EA	2		
660-A004	Equipment Cabinet, Type C	EA	1		1
660-B001	Cabinet Modifications	EA	12		1
907-661-A004	Fiber Optic Cable, 72 SM	LF	29,917		2 1
907-661-B002	Fiber Optic Drop Cable, 12 SM	LF	1,601		3 1
907-663-A001	Network Switch, Type A	EA	12		1
907-663-A002	Network Switch, Type B	EA	2		1
907-663-A005	Network Switch, Type E	EA	1		

1. REFER TO DMS DETAIL SHEETS IN THESE PLANS.
2. SHOWN ON THE PLANS AS F.O. CABLE.
3. SHOWN ON THE PLANS AS F.O. DROP.
4. SHALL BE DIGITAL (IP) TYPE CAMERAS PER THE PROJECT SPECIFICATIONS. INCLUDES ALL EQUIPMENT NECESSARY FOR A COMPLETE AND OPERABLE UNIT. CABLES REQUIRED TO SUPPLY POWER, VIDEO, AND/OR CONTROL WILL NOT BE MEASURED FOR SEPARATE PAYMENT AND SHALL BE COST ABSORBED.
5. INCLUDES ALL SIGNAL ITEMS, INCLUDING SIGNAL HEADS, POLES, ARMS, POLE AND CABINET FOUNDATIONS, AND REMOVAL OF ALL EXISTING ELECTRICAL CABLE. ALL CONTROLLERS, MMU'S, CABINETS, AND VIDEO DETECTION EQUIPMENT TO BE SALVAGED TO MDOT.

Date	Revision	By
05/17/2018	ITS-2, ITS-4, ITS-11 Plan Revisions	CR

MISSISSIPPI DEPARTMENT OF TRANSPORTATION
SUMMARY OF QUANTITIES

Proj No: HSIP-0003-01(192)
County: HANCOCK

FILENAME : SQS_ADD01.DGN
Design Team Tice Checked WRT Date 05/17/2

Working Number SQ-4
Sheet Number 10

ADDENDUM

STATE	PROJECT NO.
MISS.	HSIP-0003-01(192)

ESTIMATED QUANTITIES - ITS COMPONENTS

PAY ITEM NUMBER	DESCRIPTION	UNIT	WORKING NUMBERS																						GRAND TOTAL	
			ITS-1		ITS-2		ITS-3		ITS-4		ITS-5		ITS-6		ITS-7		ITS-8		ITS-9		ITS-10		ITS-11			
			PLAN	FINAL	PLAN	FINAL	PLAN	FINAL	PLAN	FINAL	PLAN	FINAL	PLAN	FINAL	PLAN	FINAL	PLAN	FINAL	PLAN	FINAL	PLAN	FINAL	PLAN	FINAL	PLAN	FINAL
907-630-L001	PEDESTAL SIGN SUPPORT, ASSEMBLY NO. 1, CONTRACTOR DESIGNED	LS	0		0		0		0		0		0		0		0		0		0		1		1	
907-630-M002	POST SIGN SUPPORT, ASSEMBLY NO. 2, CONTRACTOR DESIGNED	LS	0		1		0		0		0		0		0		0		0		0		0		1	
907-630-M003	POST SIGN SUPPORT, ASSEMBLY NO. 3, CONTRACTOR DESIGNED	LS	0		0		0		1		0		0		0		0		0		0		0		1	
634-E001	CAMERA POLE WITH FOUNDATION, 50' POLE	EA	0		0		0		1		0		0		0		0		0		0		1		2	
637-A009	PULLBOX ENCLOSURE, TYPE 2, TIER 22	EA	0		2		0		3		0		0		0		0		0		0		4		9	
637-A013	PULLBOX ENCLOSURE, TYPE 4, TIER 22	EA	2		2		1		4		2		1		1		1		2		1		2		19	
637-A015	PULLBOX ENCLOSURE, TYPE 5, TIER 22	EA	2		4		3		2		2		2		2		2		1		2		1		23	
637-D002	TRAFFIC SIGNAL CONDUIT, UNDERGROUND DRILLED OR JACKED, ROLLED PIPE, 2"	LF	186		△1 200		136		112		230		144		24		184		200		0		△1 340		1756	
637-I001	TRAFFIC SIGNAL CONDUIT BANK, UNDERGROUND, ROLLED PIPE, 2 @ 2"	LF	2657		△1 3206		3500		△1 3521		3008		3005		3010		2980		2070		2840		△1 1625		31422	
907-650-A002	ON STREET VIDEO EQUIPMENT, FIXED TYPE	EA	0		1		2		1		0		0		1		0		2		0		1		8	
907-650-A003	ON STREET VIDEO EQUIPMENT, PTZ TYPE	EA	1		1		1		1		0		0		1		1		1		0		1		8	
656-A002	DYNAMIC MESSAGE SIGN, TYPE 2	EA	0		0		0		0		0		0		0		0		0		0		1		1	
656-A003	DYNAMIC MESSAGE SIGN, TYPE 3	EA	0		1		0		1		0		0		0		0		0		0		0		2	
907-659-A001	TRAFFIC MANAGEMENT CENTER MODIFICATIONS	LS	0		0		0		0		0		0		0		0		0		0		0		0	
660-A002	EQUIPMENT CABINET, TYPE A	EA	0		0		0		0		0		0		0		0		0		0		0		0	
660-A003	EQUIPMENT CABINET, TYPE B	EA	0		0		0		1		0		0		0		0		0		0		1		2	
660-A004	EQUIPMENT CABINET, TYPE C	EA	0		△1 0		1		△1 0		0		0		0		0		0		0		△1 0		1	
660-B001	CABINET MODIFICATIONS	EA	2		△1 2		2		0		2		1		1		1		1		0		0		12	
907-661-A004	FIBER OPTIC CABLE, 72 SM	LF	2657		△1 3006		3500		△1 3001		3008		3005		3010		2980		2070		2840		△1 840		29917	
907-661-B002	FIBER OPTIC DROP CABLE, 12 SM	LF	186		△1 150		136		△1 112		230		144		24		184		200		0		△1 235		1601	
907-663-A001	NETWORK SWITCH, TYPE A	EA	2		△1 0		1		2		2		1		1		1		0		0		△1 2		12	
907-663-A002	NETWORK SWITCH, TYPE B	EA	0		△1 1		0		0		0		0		0		0		1		0		0		2	
907-663-A005	NETWORK SWITCH, TYPE E	EA	0		0		1		0		0		0		0		0		0		0		0		1	

ESTIMATED QUANTITIES - TRAFFIC SIGNALS

PAY ITEM NUMBER	DESCRIPTION	UNIT	WORKING NUMBERS																				GRAND TOTAL	
			TSI-1		TSI-2		TSI-3		TSI-4		TSI-5		TSI-6		TSI-7		TSI-8		TSI-9		TSI-10			
			PLAN	FINAL	PLAN	FINAL	PLAN	FINAL	PLAN	FINAL	PLAN	FINAL	PLAN	FINAL	PLAN	FINAL	PLAN	FINAL	PLAN	FINAL	PLAN	FINAL	PLAN	FINAL
632-A007	SOLID STATE TRAFFIC CABINET ASSEMBLY, TYPE III CABINET, TYPE 1 CONTROLLER	EA	0		0		0		0		1		1		0		0		0		0		2	
632-B008	REMOVE AND REPLACE EXISTING TRAFFIC SIGNAL CABINET ASSEMBLY, TYPE III CABINET, TYPE 1 CONTROLLER	EA	1		1		1		1		0		0		1		1		1		1		8	
634-A170	TRAFFIC SIGNAL EQUIPMENT POLE, TYPE VI, 8' SHAFT	EA	0		0		0		0		0		0		0		0		1		0		1	
634-A242	TRAFFIC SIGNAL EQUIPMENT POLE, TYPE II(L), 30' SHAFT, 35' ARM	EA	0		0		0		0		1		0		0		0		0		0		1	
634-A243	TRAFFIC SIGNAL EQUIPMENT POLE, TYPE II(L), 30' SHAFT, 40' ARM	EA	0		0		0		0		1		0		0		0		0		0		1	
634-A247	TRAFFIC SIGNAL EQUIPMENT POLE, TYPE II(L), 30' SHAFT, 60' ARM	EA	1		1		0		0		0		0		1		0		0		0		3	
634-A248	TRAFFIC SIGNAL EQUIPMENT POLE, TYPE II(L), 30' SHAFT, 65' ARM	EA	0		1		0		1		1		0		1		0		1		0		5	
634-A249	TRAFFIC SIGNAL EQUIPMENT POLE, TYPE II(L), 30' SHAFT, 70' ARM	EA	0		0		1		1		1		0		0		0		1		0		4	
634-A250	TRAFFIC SIGNAL EQUIPMENT POLE, TYPE II(L), 30' SHAFT, 75' ARM	EA	0		0		1		0		0		0		0		0		0		1		2	
634-A541	TRAFFIC SIGNAL EQUIPMENT POLE, TYPE II(L), 30' SHAFT, 55' & 65' ARM	EA	1		0		0		0		0		0		0		0		0		0		1	
634-C006	POLE FOUNDATIONS, CLASS "DS" CONCRETE	CY	8		8		8		8		16		0		8		0		8		4		68	
634-D003	SLIP CASING, 36" DIAMETER	LF	30		30		30		30		60		0		30		0		30		15		255	
635-A059	TRAFFIC SIGNAL HEAD, TYPE 1	EA	5		5		8		6		6		2		8		2		8		8		58	
635-A060	TRAFFIC SIGNAL HEAD, TYPE 1A	EA	2		0		0		0		0		4		0		4		0		0		10	
635-A065	TRAFFIC SIGNAL HEAD, TYPE 2 FYA	EA	1		2		5		2		2		0		2		0		2		2		18	
635-A066	TRAFFIC SIGNAL HEAD, TYPE 2A FYA	EA	1		0		0		0		0		2		0		2		0		0		5	
635-A070	TRAFFIC SIGNAL HEAD, TYPE 3	EA	2		2		0		2		2		2		0		2		0		0		12	
635-A071	TRAFFIC SIGNAL HEAD, TYPE 3A	EA	1		0		0		0		0		0		0		0		0		0		1	
635-A073	TRAFFIC SIGNAL HEAD, TYPE 4	EA	0		1		0		0		0		0		0		0		0		0		1	
635-A076	TRAFFIC SIGNAL HEAD, TYPE 6	EA	0		0		0		0		0		0		0		0		2		2		4	
636-B005	ELECTRIC CABLE, UNDERGROUND IN CONDUIT, IMSA 20-1, AWG 10, 2 CONDUCTOR	LF	218		348		518		262		380		0		294		36		312		185		2553	
636-B016	ELECTRIC CABLE, UNDERGROUND IN CONDUIT, IMSA 20-1, AWG 14, 5 CONDUCTOR	LF	0		0		0		0		0		0		0		0		195		505		700	
636-B018	ELECTRIC CABLE, UNDERGROUND IN CONDUIT, IMSA 20-1, AWG 14, 8 CONDUCTOR	LF	687		508		817		483		520		306		431		310		587		655		5304	
636-B029	ELECTRIC CABLE, UNDERGROUND IN CONDUIT, IMSA 20-1, AWG 8, 3 CONDUCTOR	LF	42		36		77		16		52		13		125		0		57		23		441	
636-D001	ELECTRIC CABLE, AERIAL SUPPORTED IN CONDUIT, IMSA 20-1, AWG 10, 2 CONDUCTOR	LF	100		100		132		132		132		28		66		43		100		92		925	
636-D005	ELECTRIC CABLE, AERIAL SUPPORTED IN CONDUIT, IMSA 20-1, AWG 14, 5 CONDUCTOR	LF	0		0		0		0		0		0		0		0		20		20		40	
636-D012	ELECTRIC CABLE, AERIAL SUPPORTED IN CONDUIT, IMSA 20-2, AWG 8, 3 CONDUCTOR	LF	10		10		10		10		10		10		10		0		10		10		90	
636-D021	ELECTRIC CABLE, AERIAL SUPPORTED IN CONDUIT, IMSA 20-1, AWG 14, 8 CONDUCTOR	LF	365		270		335		295		290		310		275		320		345		320		3125	
637-A009	PULLBOX ENCLOSURE, TYPE 2, TIER 22	EA	0		0		0		0		3		0		0		0		0		2		5	
637-A011	PULLBOX ENCLOSURE, TYPE 3, TIER 22	EA	1		1		1		1		1		0		1		0		1		1		8	
637-C026	TRAFFIC SIGNAL CONDUIT, UNDERGROUND, TYPE 4, 1"	LF	33		19		0		0		33		0		109		26		48		0		268	
637-C028	TRAFFIC SIGNAL CONDUIT, UNDERGROUND, TYPE 4, 2"	LF	76		72		130		46		62		19		92		30		67		64		658	
637-C030	TRAFFIC SIGNAL CONDUIT, UNDERGROUND, TYPE 4, 3"	LF	27		51		57		42		52		25		48		27		70		36		435	
637-D002	TRAFFIC SIGNAL CONDUIT, UNDERGROUND DRILLED OR JACKED, ROLLED PIPE, 2"	LF	100		188		191		167		0		0		69		0		152		239		1106	
637-D003	TRAFFIC SIGNAL CONDUIT, UNDERGROUND DRILLED OR JACKED, ROLLED PIPE, 3"	LF	160		108		257		127		307		128		219		122		258		168		1854	
639-B001	OPTICAL DETECTOR	EA	4		4		4		4		4		4		4		4		4		4		40	
639-C001	MULTIMODE PHASE SELECTOR	EA	1		1		1		1		1		1		1		1		1		1		10	
639-E001	OPTICAL DETECTOR CABLE	LF	647		689		959		607		731		540		904		540		849		910		7376	
643-A003	VIDEO DETECTION SYSTEM, 1 SENSOR, TYPE 2	EA	2		2		2		2		2		2		2		2		2		2		20	
643-E001	MULTI-SENSOR DETECTION SYSTEM, 1 SENSOR	EA	2		2		2		2		2		2		2		2		2		2		20	
645-B001	ACCESSIBLE PEDESTRIAN DETECTION ASSEMBLY	EA	0		0		0		0		0		0		0		0		2		2		4	
647-A001	REMOVAL OF EXISTING TRAFFIC SIGNAL EQUIPMENT	LS	100%		100%		100%		100%		100%		100%		100%		100%		100%		100%		100%	
653-B003	STREET NAME SIGN, TYPE III	SF	36		33		52.5		34.5		31.5		37.5		39		54.5		33		33		384.5	

DATE	REVISION	BY	WRT
05-15-18	QUANTITY CHANGES ON ITS-2,4 & 11		

MISSISSIPPI DEPARTMENT OF TRANSPORTATION

TRAFFIC SIGNALS AND ITS COMPONENTS REQ'D.

COUNTY: HANCOCK

PROJ. NO.: HSIP-0003-01(192)

FILENAME: EQ.DGN

DESIGN TEAM _____ CHECKED _____ DATE _____

WORKING NUMBER EQ-7

SHEET NUMBER 17

PLAN
ROADWAY DESIGN DIVISION
MISSISSIPPI DEPARTMENT OF TRANSPORTATION

5/16/2018 16:11:48 EQ.DGN

FMS CON: 107127-301000

ADDENDUM

STATE	PROJECT NO.
MISS.	HSIP-0003-01(192)

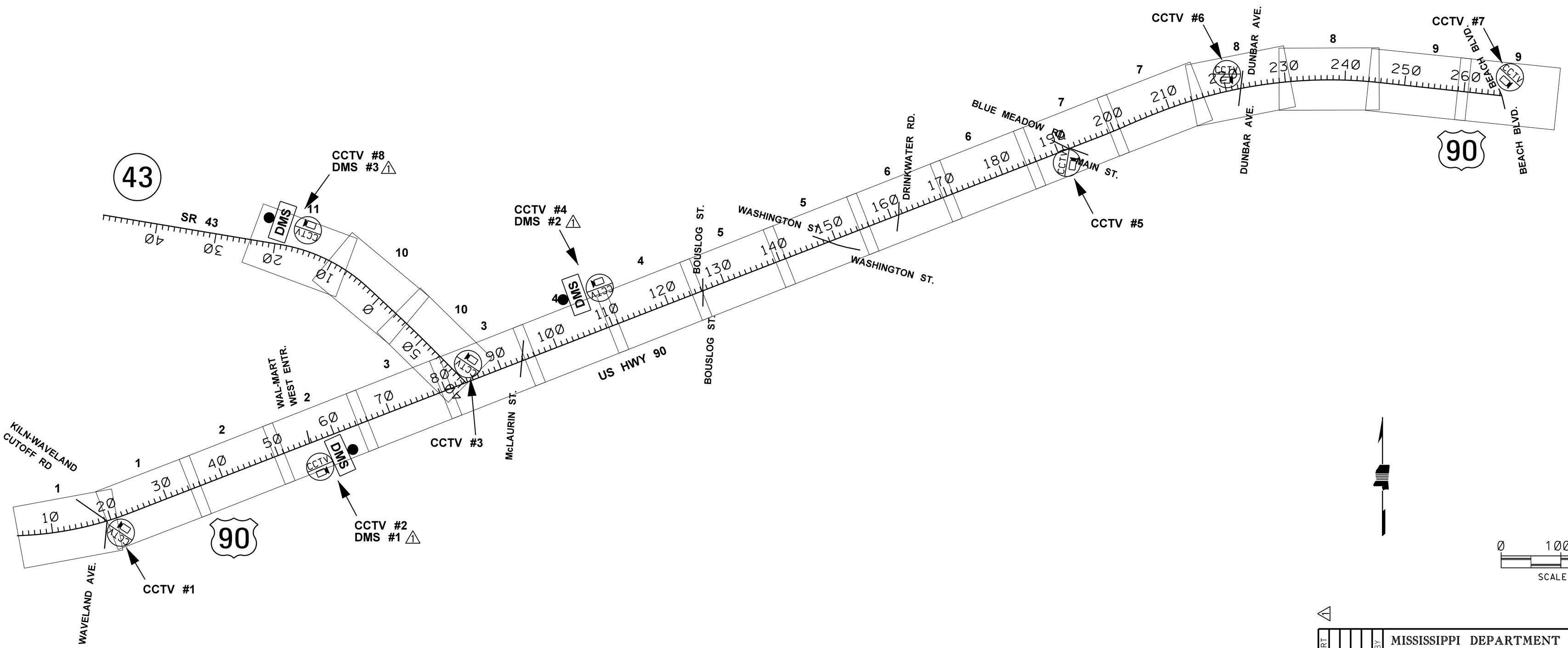

0 1000 2000 3000

SCALE: 1" = 1,000'

WR-T		BY	MISSISSIPPI DEPARTMENT OF TRANSPORTATION
DMS SIGN NUMBERS CHANGED		REVISION	**ITS PLAN**
			PROJECT LOCATION PLAN
			COUNTY: HANCOCK
			PROJ. NO.: HSIP-0003-01(192)
05-15-18		DATE	FILENAME: LP-1.DGN
			DESIGN TEAM_____ CHECKED_____ DATE_____

WORKING NUMBER: LP-1

SHEET NUMBER: 3001

PLAN
ROADWAY DESIGN DIVISION
MISSISSIPPI DEPARTMENT OF TRANSPORTATION

5/17/2018 13:12:00 LP-1.DGN

FMS CON: 107127-301000

ADDENDUM

STATE	PROJECT NO.
MISS.	HSIP-0003-01(192)

MATCH LINE STA 35+00 SEE SH ITS-1

US HWY 90

40

45

PI Sta. 49+41.603

MATCH LINE STA 50+00 (THIS SHEET)

COND. BANK (2-2" ROLL PIPE) (BORED)(331')
1-F.O. CABLE (72 SM)(331')

COND. BANK (2-2" ROLL PIPE) (BORED)(990')
1-F.O. CABLE (72 SM)(990')

0 50 100
SCALE:1"=50'

MATCH LINE STA 50+00 (THIS SHEET)

1 - TYPE "B" NETWORK SWITCH
1 - CABINET MODIFICATIONS

CONDUIT (1-2" ROLL PIPE) (BORED) (124')
1-F.O. DROP CABLE (12 SM) (124')

WAL-MART WEST ENTR.

CONDUIT (1-2" ROLL PIPE) (BORED) (50')
DMS POWER CABLES
(CABLES TO BE ABSORBED IN
ITEM 656-A)

55

60

ELECTRICAL DEMARCATION

DMS #1 TYPE 3
STA. 61+00
SEE DMS DETAIL WK. NO. DMS-1

COND. BANK (2-2" ROLL PIPE) (BORED) (661')
1-F.O. CABLE (72 SM)(661')

COND. BANK (2-2" ROLL PIPE) (200')
DMS POW. & COMM. CABLES
(CABLES ABSORBED IN ITEM 656-A)

COND. BANK (2-2" ROLL PIPE) (BORED)(630')
1-F.O. CABLE (72 SM)(630')

CONDUIT (1-2" ROLL PIPE)(BORED)(25')
1 - F.O. DROP CABLE (12 SM)(25')

MATCH LINE STA 65+00 SEE SH ITS-3

*CCTV #2, 1 PTZ & 1 FIXED
MOUNTED ON SE SIGNAL POLE

*NOTE: USE TRAFFIC SIGNAL CONDUIT FOR
CCTV #2 POWER AND COMM TO PTZ.
(CABLES ABSORBED IN 907-650-A003).
REFER TO TSI-2 FOR TRAFFIC SIGNAL
DETAILS.

PAD-MOUNTED DMS CABINET WITH
TYPE A NETWORK SWITCH
(SWITCH PAID SEPARATELY; CABINET,
CONC. PAD, AND ALL OTHER COMPONENTS
ABSORBED IN ITEM 656-A)
STA. 58+80
220' WEST OF DMS SIGN
26' FROM E.O.T.L.

COND. BANK (2-2" ROLL PIPE) (BORED)(394')
1-F.O. CABLE (72 SM)(394')

0 50 100
SCALE:1"=50'

DATE	DMS SIGN NO. CHANGED, ADDED NOTES	WRT			REVISION	BY
05-15-18						

MISSISSIPPI DEPARTMENT OF TRANSPORTATION

ITS PLAN

HWY 90

STA. 35+00 TO STA. 65+00

COUNTY: HANCOCK

PROJ. NO.: HSIP-0003-01(192)

FILENAME: ITS-2.DGN

DESIGN TEAM _____ CHECKED _____ DATE _____

WORKING NUMBER ITS-2

SHEET NUMBER 3004

PLAN
ROADWAY DESIGN DIVISION
MISSISSIPPI DEPARTMENT OF TRANSPORTATION

5/17/2018 09:31:09 ITS-2.DGN

FMS CON: 107127-301000

ADDENDUM

STATE	PROJECT NO.
MISS.	HSIP-0003-01(192)

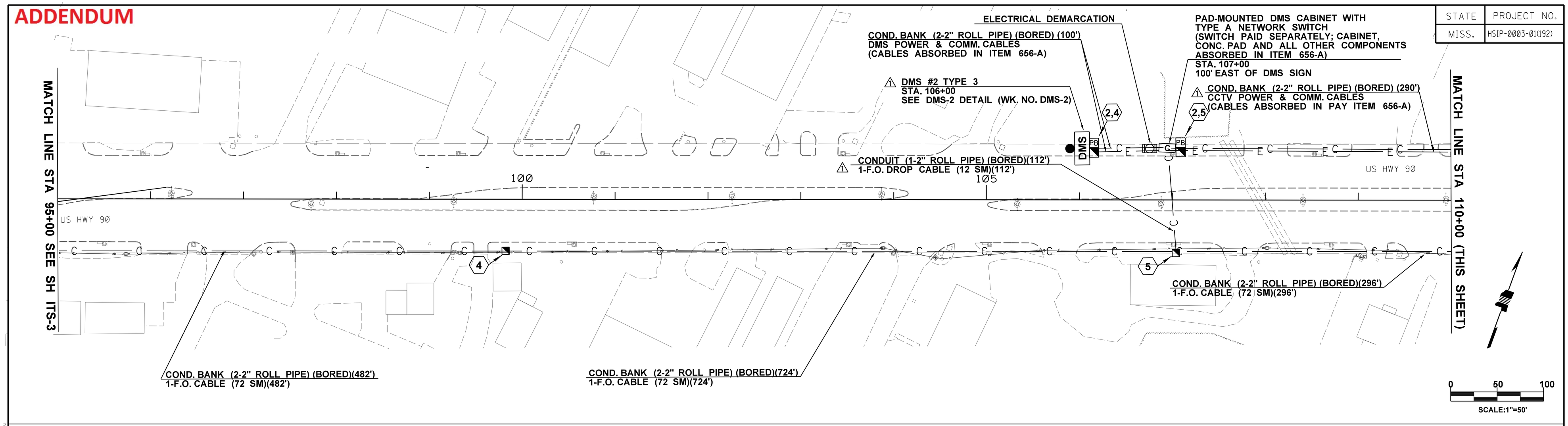

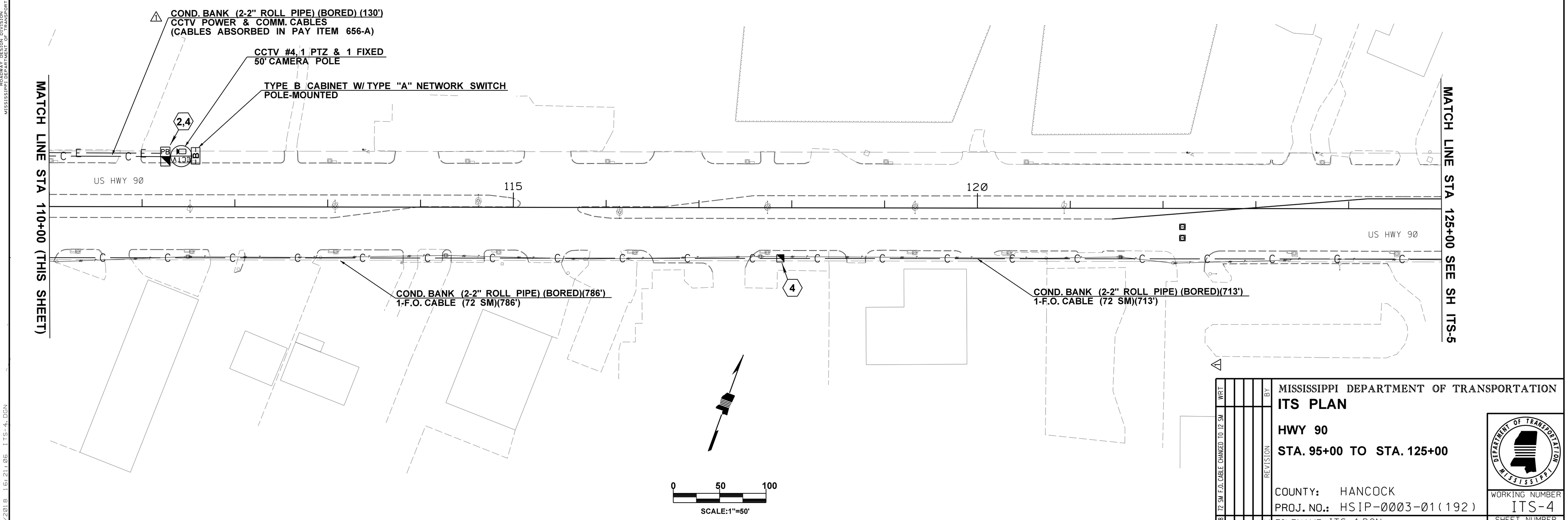

DATE	REVISION	BY
05-15-18	12 SM F.O. CABLE CHANGED TO 12 SM	WRT

MISSISSIPPI DEPARTMENT OF TRANSPORTATION

ITS PLAN

HWY 90

STA. 95+00 TO STA. 125+00

COUNTY: HANCOCK

PROJ. NO.: HSIP-0003-01(192)

FILENAME: ITS-4.DGN

DESIGN TEAM _____ CHECKED _____ DATE _____

WORKING NUMBER ITS-4

SHEET NUMBER 3006

PLAN
ROADWAY DESIGN DIVISION
MISSISSIPPI DEPARTMENT OF TRANSPORTATION

5/16/2018 16:21:05 ITS-4.DGN

FMS CON: 107127-301000

STATE	PROJECT NO.
MISS.	HSIP-0003-01(192)

ADDENDUM

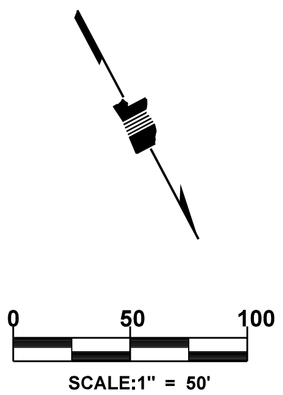

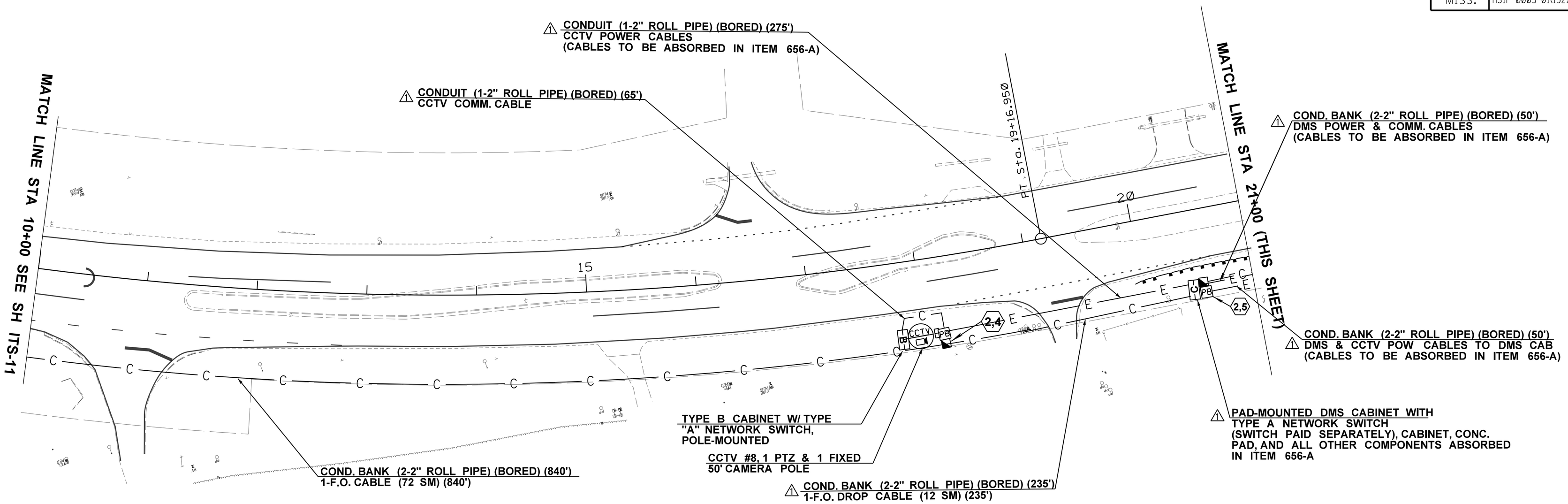

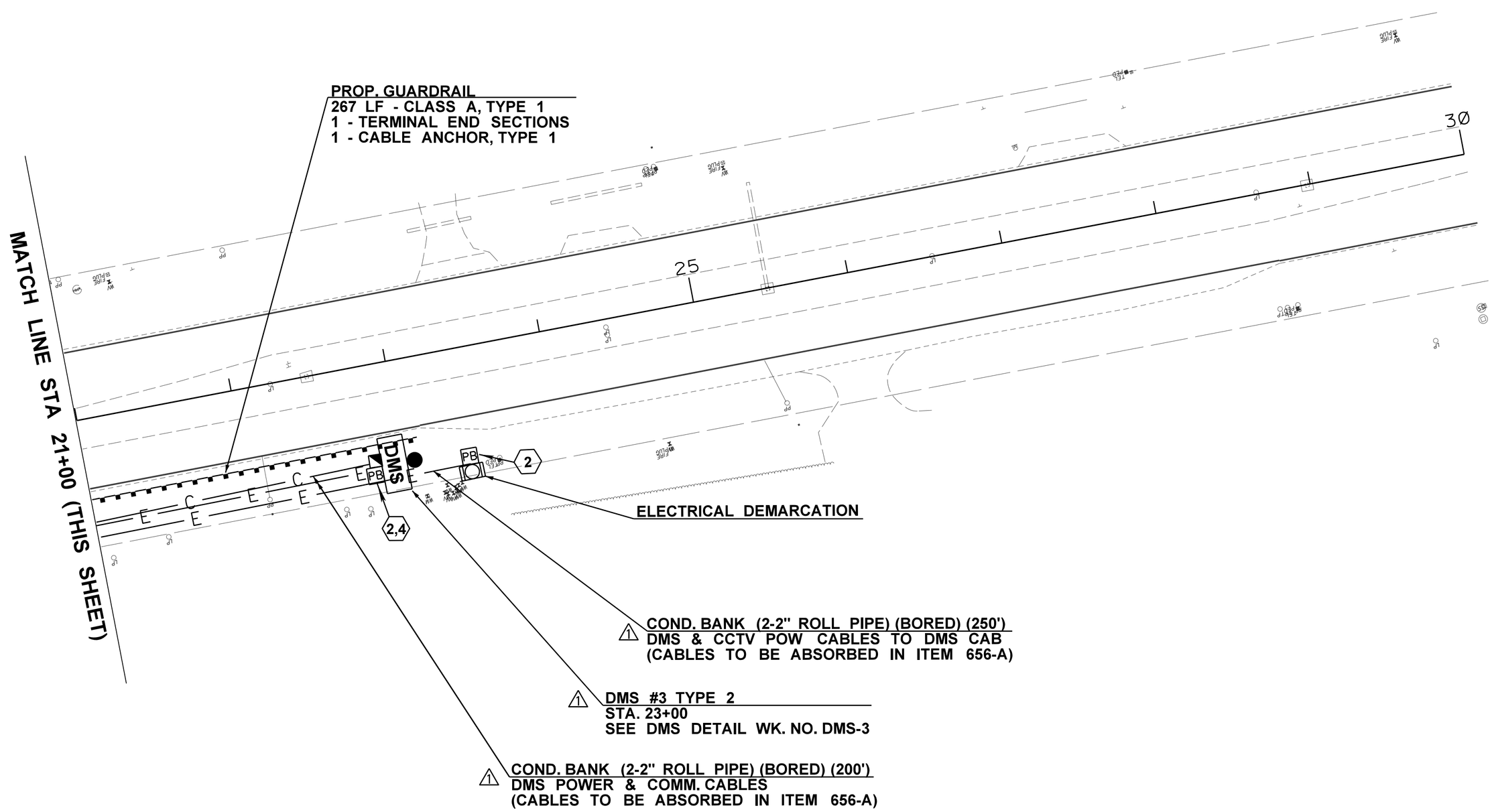

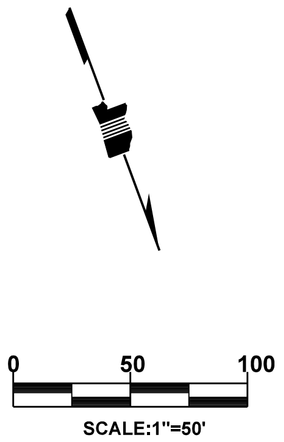

DATE	REVISION	BY	WRT
05-15-18	REVISED DMS NO., F.O. AND ELEC		

MISSISSIPPI DEPARTMENT OF TRANSPORTATION

ITS PLAN

HWY 43 / 603

STA. 10+00 TO STA. 30+00

COUNTY: HANCOCK

PROJ. NO.: HSIP-0003-01(192)

FILENAME: ITS-11.DGN

DESIGN TEAM _____ CHECKED _____ DATE _____

WORKING NUMBER ITS-11

SHEET NUMBER 3013

PLAN
ROADWAY DESIGN DIVISION
MISSISSIPPI DEPARTMENT OF TRANSPORTATION

5/16/2018 16:22:05 ITS-11.DGN

FMS CON: 107127-301000

STATE	PROJECT NO.
MISS.	HSIP-0003-01(192)

ADDENDUM TYPE 3 DMS STRUCTURE NOTES:

1. SIGN STRUCTURE, CATWALK, SUPPORTS AND FOOTINGS ARE ALL SCHEMATIC AND FOR ILLUSTRATIVE PURPOSES ONLY.
2. ALL ROADWAY DIMENSIONS ARE APPROXIMATE AND SHOULD BE FIELD VERIFIED BY THE CONTRACTOR.
3. THE CONTRACTOR SHALL DESIGN THE OVERHEAD SIGN STRUCTURE, INCL. CATWALK, CONNECTIONS, AND FOUNDATIONS.
4. THE DESIGN SHALL BE IN ACCORDANCE WITH THE LATEST "AASHTO STANDARD SPECIFICATIONS FOR STRUCTURAL SUPPORTS FOR HIGHWAY SIGNS, LUMINAIRES AND TRAFFIC SIGNALS", INCLUDING THE MAXIMUM DEAD LOAD DEFLECTION CRITERIA, DESGIN WIND SPEED SHALL BE 140 MPH.
5. THE STRUCTURE SHALL BE DESGINED, FABRICATED, AND CONSTRUCTED EXPRESSLY TO SUPPORT AND BE COMPATIBLE WITH THE TYPE 3 DYNAMIC MESSAGE SIGN DESCRIBED IN THE DESIGN SPECIAL PROVISIONS.
6. THE CONTRACTOR SHALL SUBMIT TWO (2) SETS OF CALCULATIONS AND FOUR (4) SETS OF SHOP DRAWINGS FOR ALL ITEMS ASSOCIATED WITH THE DESIGN, MANUFACTURING, CONSTRUCTION AND INSTALLATION OF THE STRUCTURE, INCL. ITS ATTACHMENTS AND FOUNDATIONS, TO THE MDOT BRIDGE DIVISION. THE FIRST PAGE OF EACH SET OF DESIGN CALCULATIONS AND EACH PAGE OF THE SHOP DRAWINGS SHALL BEAR THE SEAL OF A PROFESSIONAL ENGINEER REGISTERED IN THE STATE OF MISSISSIPPI.
7. THE CONTRACTOR SHALL DETERMINE THE ACTUAL LENGTH OF THE SUPPORT COLUMNS AND WIDTH OF THE STRUCTURE ON THE BASIS OF THE EXISTING FIELD CONDITIONS. ALL DETAILS AND DIMENSIONS SHOWN ON THIS DRAWING ARE APPROXIMATE AND FOR BIDDING PURPOSES ONLY.
8. MATERIAL CERTIFICATION SHALL BE SUBMITTED TO THE ENGINEER FOR HIS APPROVAL 30 DAYS PRIOR TO THE STRUCTURE ERECTION.

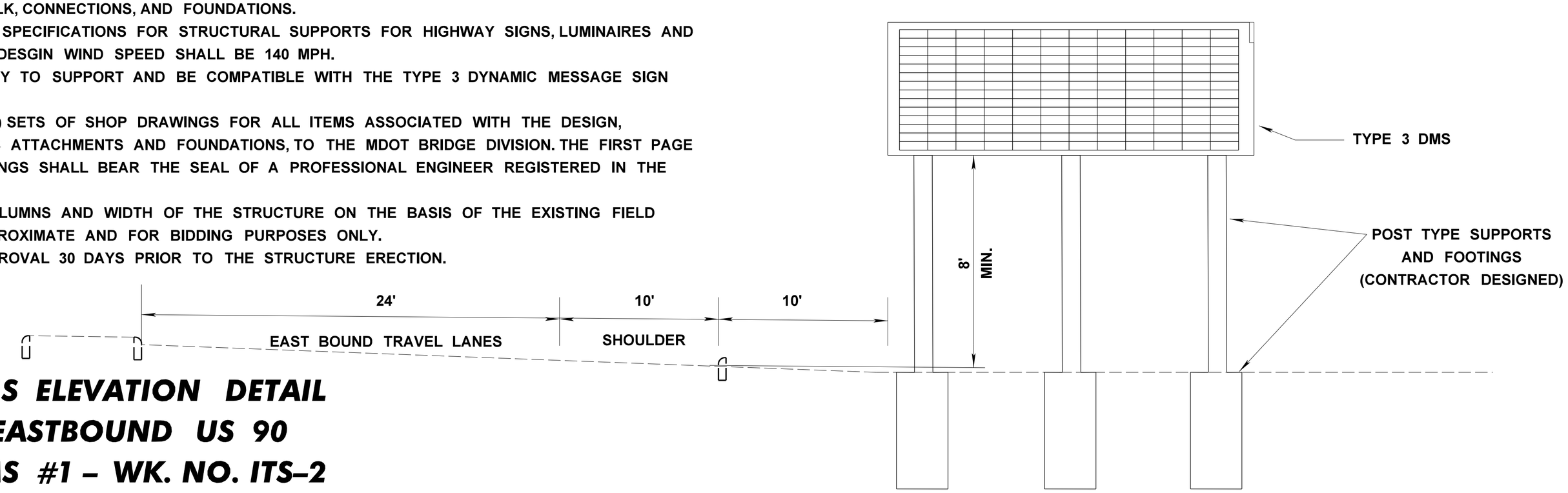

DMS ELEVATION DETAIL
EASTBOUND US 90
DMS #1 – WK. NO. ITS–2

NOT TO SCALE

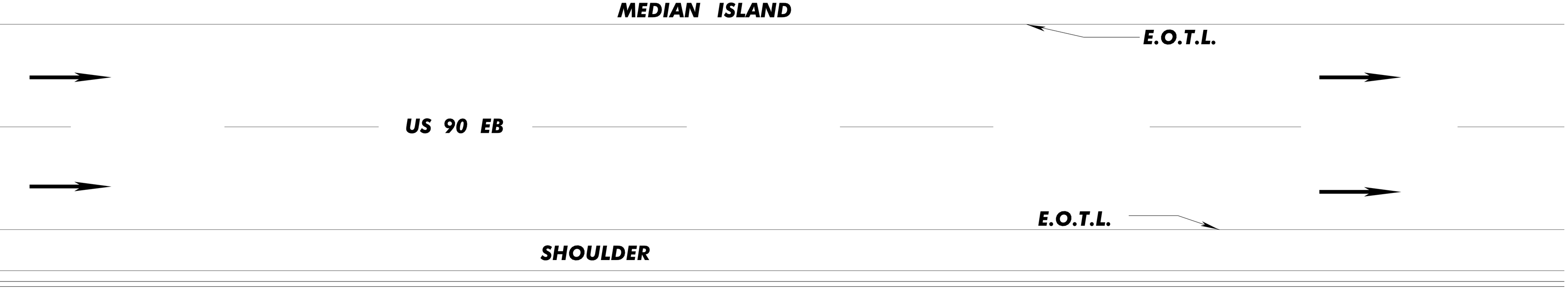

PLAN VIEW DETAIL

NOT TO SCALE

DATE	REVISION	BY	WRT
05-15-18	REVISED DMS NO., ELEC AND PAY ITEM		

MISSISSIPPI DEPARTMENT OF TRANSPORTATION

DMS DETAILS

DMS #1 TYPE 3

COUNTY: HANCOCK

PROJ. NO.: HSIP-0003-01(192)

WORKING NUMBER: DMS-1

SHEET NUMBER: 3014

FILENAME: DMS1-TYPE 3.DGN

DESIGN TEAM _____ CHECKED _____ DATE _____

PLAN
ROADWAY DESIGN DIVISION
MISSISSIPPI DEPARTMENT OF TRANSPORTATION

5/16/2018 16:15:13 DMS1-TYPE 3.DGN

FMS CON: 107127-301000

STATE	PROJECT NO.
MISS.	HSIP-0003-01(192)

ADDENDUM

TYPE 3 DMS STRUCTURE NOTES:

1. SIGN STRUCTURE, CATWALK, SUPPORTS AND FOOTINGS ARE ALL SCHEMATIC AND FOR ILLUSTRATIVE PURPOSES ONLY.
2. ALL ROADWAY DIMENSIONS ARE APPROXIMATE AND SHOULD BE FIELD VERIFIED BY THE CONTRACTOR.
3. THE CONTRACTOR SHALL DESIGN THE OVERHEAD SIGN STRUCTURE, INCL. CATWALK, CONNECTIONS, AND FOUNDATIONS.
4. THE DESIGN SHALL BE IN ACCORDANCE WITH THE LATEST "AASHTO STANDARD SPECIFICATIONS FOR STRUCTURAL SUPPORTS FOR HIGHWAY SIGNS, LUMINAIRES AND TRAFFIC SIGNALS", INCLUDING THE MAXIMUM DEAD LOAD DEFLECTION CRITERIA, DESGIN WIND SPEED SHALL BE 140 MPH.
5. THE STRUCTURE SHALL BE DESGINED, FABRICATED, AND CONSTRUCTED EXPRESSLY TO SUPPORT AND BE COMPATIBLE WITH THE TYPE 3 DYNAMIC MESSAGE SIGN DESCRIBED IN THE DESIGN SPECIAL PROVISIONS.
6. THE CONTRACTOR SHALL SUBMIT TWO (2) SETS OF CALCULATIONS AND FOUR (4) SETS OF SHOP DRAWINGS FOR ALL ITEMS ASSOCIATED WITH THE DESIGN, MANUFACTURING, CONSTRUCTION AND INSTALLATION OF THE STRUCTURE, INCL. ITS ATTACHMENTS AND FOUNDATIONS, TO THE MDOT BRIDGE DIVISION. THE FIRST PAGE OF EACH SET OF DESIGN CALCULATIONS AND EACH PAGE OF THE SHOP DRAWINGS SHALL BEAR THE SEAL OF A PROFESSIONAL ENGINEER REGISTERED IN THE STATE OF MISSISSIPPI.
7. THE CONTRACTOR SHALL DETERMINE THE ACTUAL LENGTH OF THE SUPPORT COLUMNS AND WIDTH OF THE STRUCTURE ON THE BASIS OF THE EXISTING FIELD CONDITIONS. ALL DETAILS AND DIMENSIONS SHOWN ON THIS DRAWING ARE APPROXIMATE AND FOR BIDDING PURPOSES ONLY.
8. MATERIAL CERTIFICATION SHALL BE SUBMITTED TO THE ENGINEER FOR HIS APPROVAL 30 DAYS PRIOR TO THE STRUCTURE ERECTION.

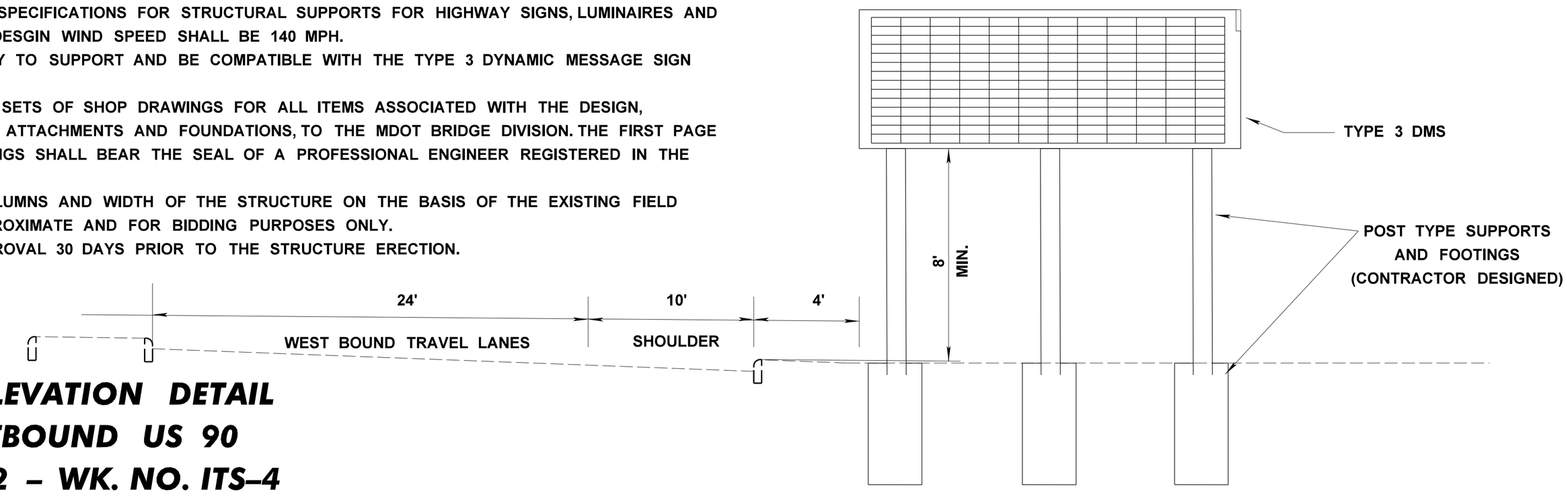

DMS ELEVATION DETAIL
WESTBOUND US 90
DMS #2 – WK. NO. ITS–4

NOT TO SCALE

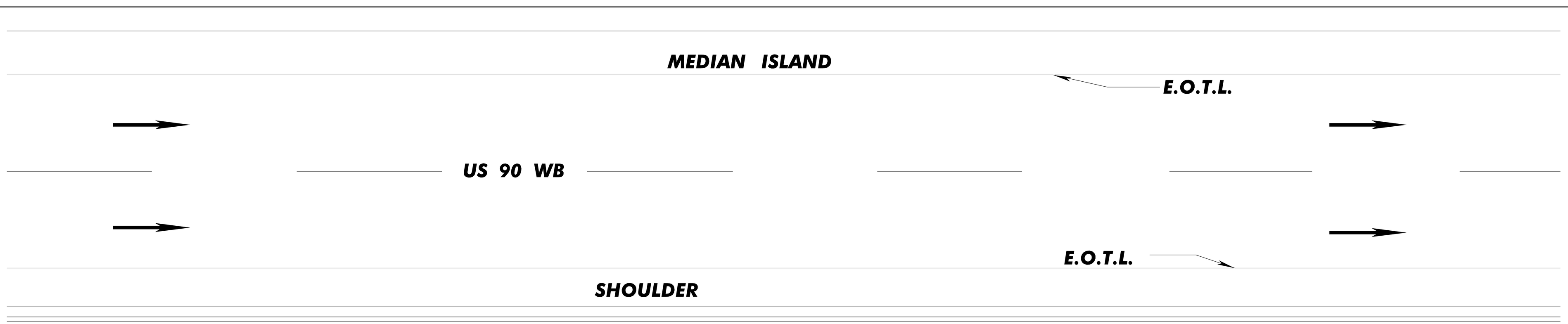

PLAN VIEW DETAIL

NOT TO SCALE

DATE	REVISION	BY	WRT
05-15-18	DMS NO. CHANGED		

MISSISSIPPI DEPARTMENT OF TRANSPORTATION

DMS DETAILS

DMS #2 TYPE 3

COUNTY: HANCOCK

PROJ. NO.: HSIP-0003-01(192)

FILENAME: DMS2-TYPE 3.DGN

DESIGN TEAM _____ CHECKED _____ DATE _____

WORKING NUMBER: DMS-2

SHEET NUMBER: 3015

PLAN
ROADWAY DESIGN DIVISION
MISSISSIPPI DEPARTMENT OF TRANSPORTATION

5/16/2018 16:16:11 DMS2-TYPE 3.DGN

FMS CON: 107127-301000

STATE	PROJECT NO.
MISS.	HSIP-0003-01(192)

ADDENDUM

TYPE 2 DMS STRUCTURE NOTES:

1. SIGN STRUCTURE, CATWALK, SUPPORTS AND FOOTINGS ARE ALL SCHEMATIC AND FOR ILLUSTRATIVE PURPOSES ONLY. ALL ROADWAY DIMENSIONS ARE APPROXIMATE AND SHOULD BE FIELD VERIFIED BY THE CONTRACTOR.
2. THE CONTRACTOR SHALL DESIGN THE OVERHEAD SIGN STRUCTURE, INCL. CATWALK, CONNECTIONS AND FOUNDATIONS.
3. THE DESIGN SHALL BE IN ACCORDANCE WITH THE LATEST :AASHTO STANDARD SPECIFICATIONS FOR STRUCTURAL SUPPORTS FOR HIGHWAY SIGNS, LUMINARIES AND TRAFFIC SIGNALS", INCLUDING THE MAXIMUM DEAD LOAD DEFLECTION CRITERIA. DESIGN WIND SPEED SHALL BE 140 MPH.
4. THE STRUCTURE SHALL BE DESIGNED, FABRICATED AND CONSTRUCTED EXPRESSLY TO SUPPORT AND BE COMPATIBLE WITH THE TYPE 2 DYNAMIC MESSAGE SIGN DESCRIBED IN THE DESIGN SPECIAL PROVISIONS.
5. THE CONTRACTOR SHALL SUBMIT TWO (2) SETS OF CALCULATIONS AND FOUR (4) SETS OF SHOP DRAWINGS FOR ALL ITEMS ASSOCIATED WITH THE DESIGN, MANUFACTURING,CONSTRUCTION AND INSTALLATION OF THE STRUCTURE, INCL. ITS ATTACHMENTS AND FOUNDATIONS, TO THE MDOT BRIDGE DIVISION. THE FIRST PAGE OF EACH SET OF DESIGN CALCULATIONS AND EACH PAGE OF THE SHOP DRAWINGS SHALL BEAR THE SEAL OF A PROFESSIONAL ENGINEER REGISTER4ED IN THE STATE OF MISSISSIPPI.
6. THE CONTRACTOR SHALL DETERMINE THE ACTUAL LENGTHS OF THE SUPPORT COLUMNS AND WIDTH OF THE STRUCTURE ON THE BASIS OF THE EXISTING FIELD CONDITIONS. ALL DETAILS AND DIMENSIONS SHOWN ON THIS DRAWING ARE APPROXIMATE AND FOR BIDDING PURPOSES ONLY.
7. MATERIAL CERTIFICATION SHALL BE SUBMITTED TO THE ENGINEER FOR HIS APPROVAL 30 DAYS PRIOR TO THE STRUCTURE ERECTION.
8. SEE SPECIAL PROVISION NO.907-630-3 FOR ADDITIONAL STRUCTURAL REQUIREMENTS.

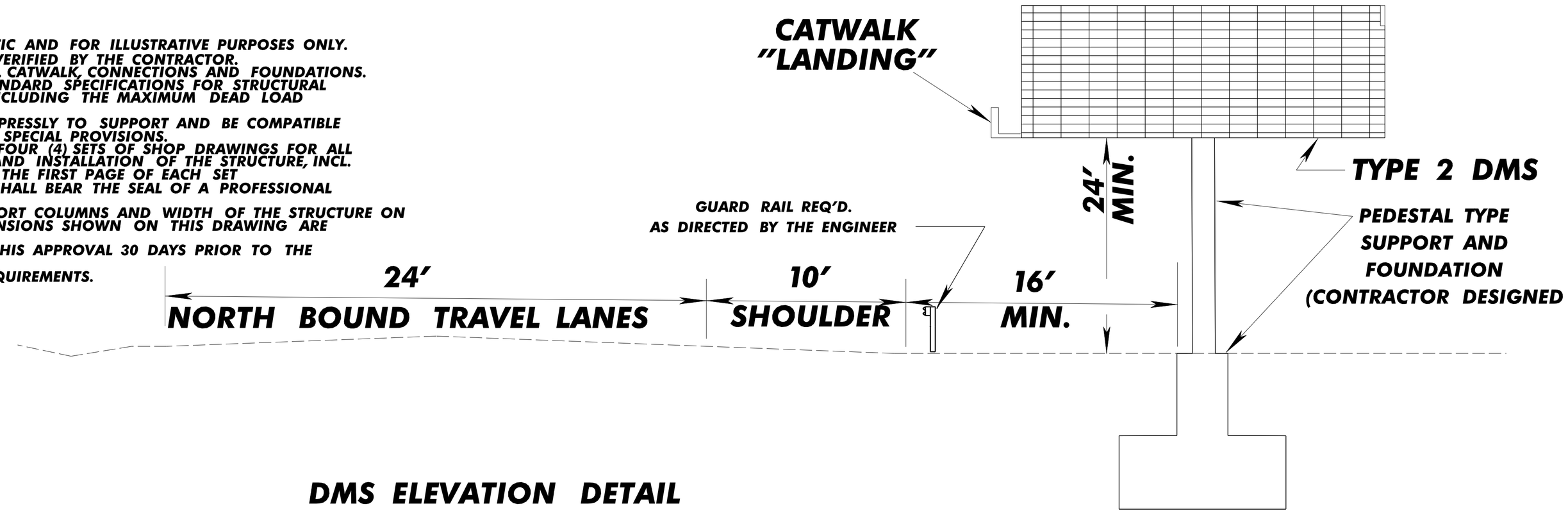

NOT TO SCALE

DMS ELEVATION DETAIL

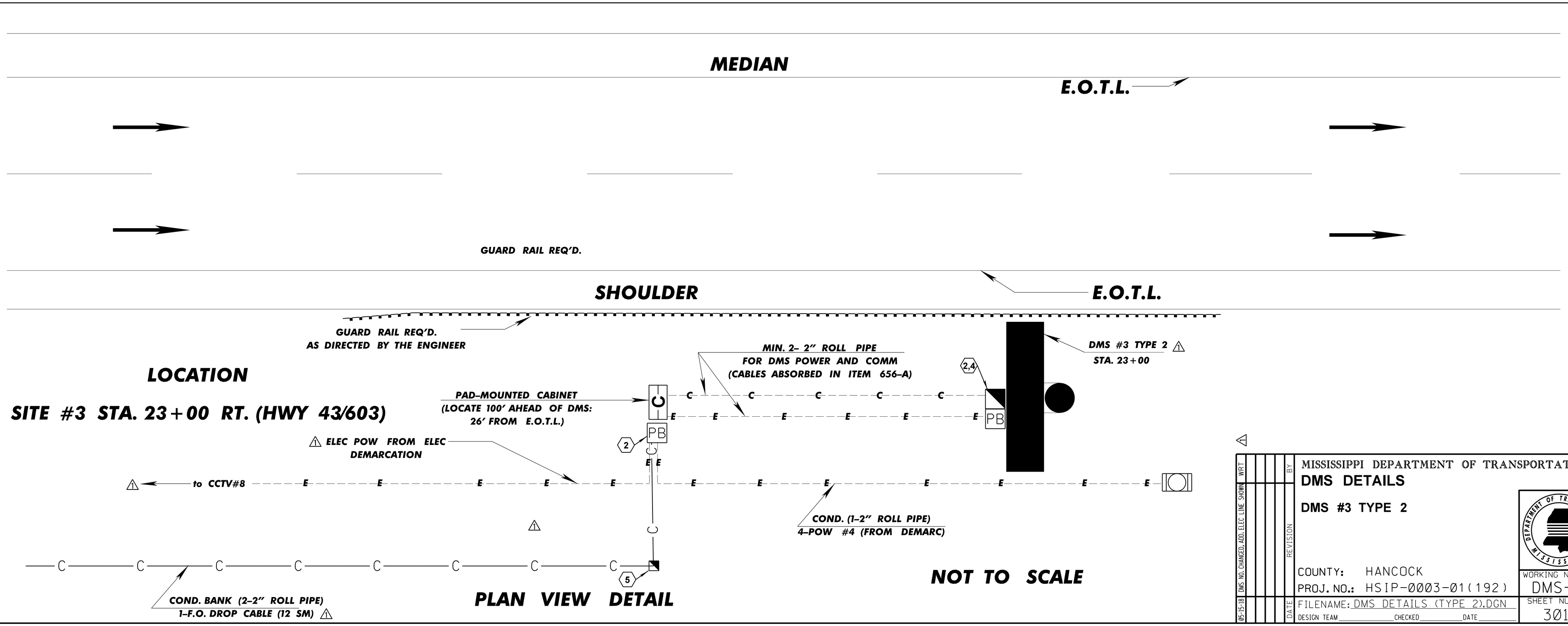

PLAN VIEW DETAIL

NOT TO SCALE

DATE	REVISION	BY
05-15-18	DMS NO. CHANGED, ADD. ELEC. LINE SHOWN	WRT

MISSISSIPPI DEPARTMENT OF TRANSPORTATION

DMS DETAILS

DMS #3 TYPE 2

COUNTY: HANCOCK

PROJ. NO.: HSIP-0003-01(192)

FILENAME: DMS DETAILS (TYPE 2).DGN

DESIGN TEAM _____ CHECKED _____ DATE _____

WORKING NUMBER DMS-3

SHEET NUMBER 3016

PLAN
ROADWAY DESIGN DIVISION
MISSISSIPPI DEPARTMENT OF TRANSPORTATION

5/16/2018 16:13:50 DMS DETAILS (TYPE 2).DGN

FMS CON: 107127-301000

STATE	PROJECT NO.
MISS.	HSIP-0003-01(192)

ADDENDUM

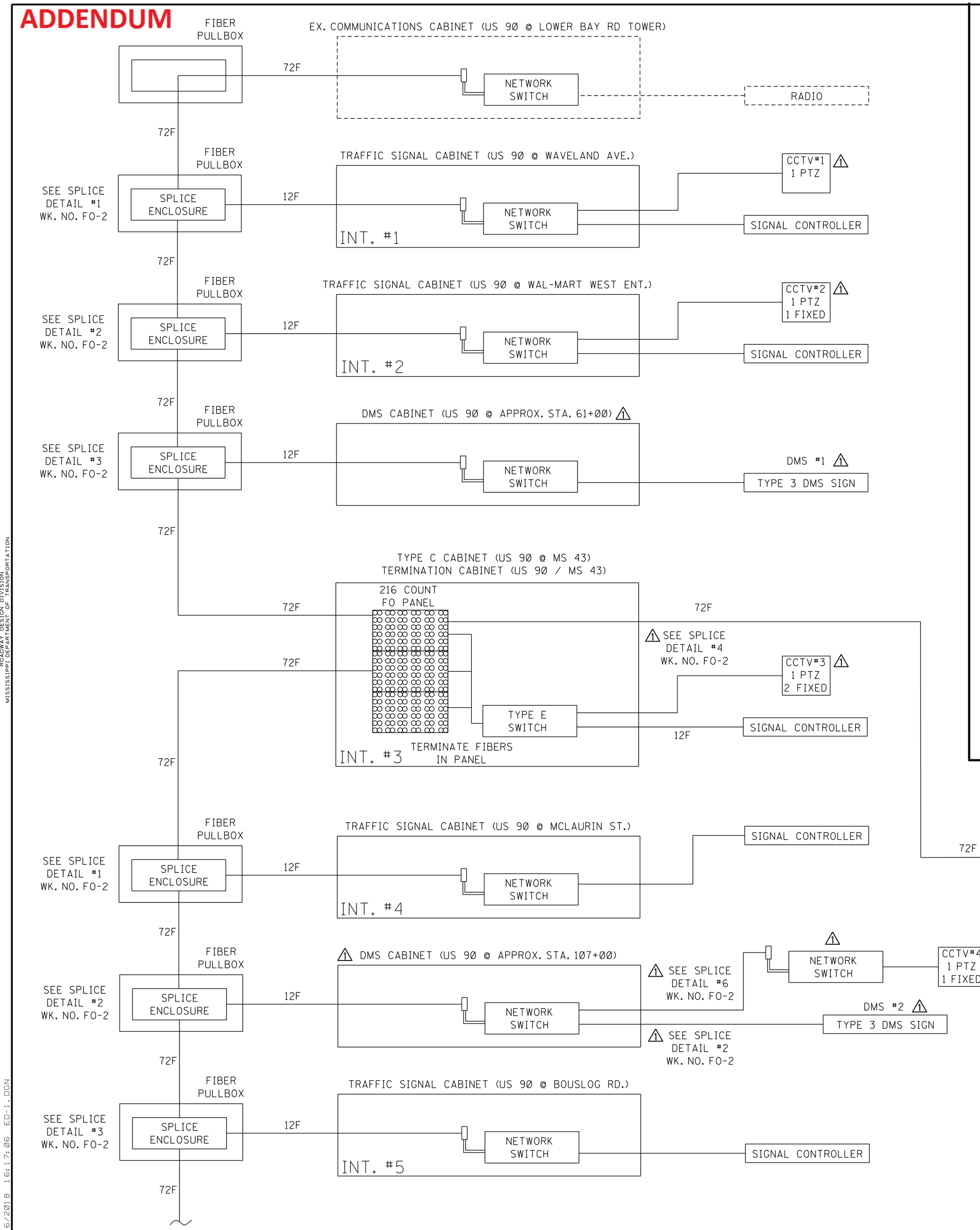

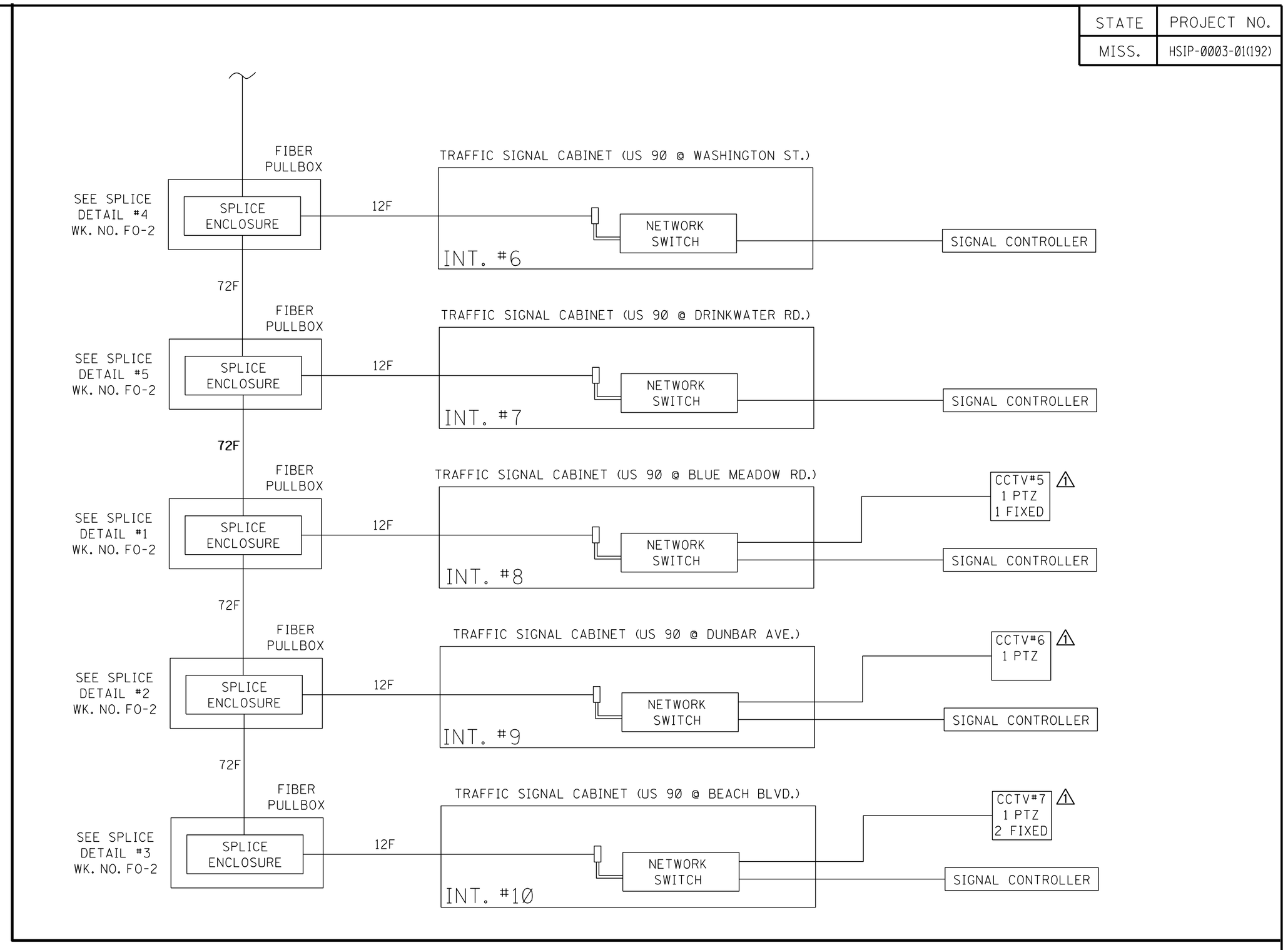

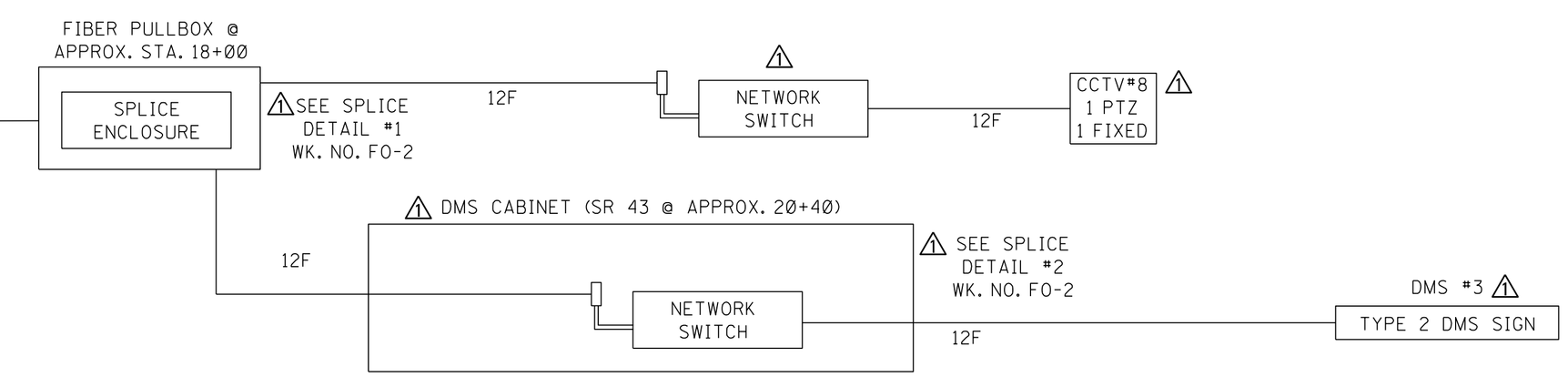

LEGEND

- EXISTING EQUIPMENT
- PROPOSED EQUIPMENT
- 72F — PROPOSED SINGLE-MODE FIBER OPTIC TRUNK CABLE
- PROPOSED ETHERNET CABLE
- 12F — PROPOSED SINGLE-MODE FIBER OPTIC DROP CABLE

DATE	REVISION	BY	WRT
05-15-18	MODIFIED SPLICE DETAILS/DMS		

MISSISSIPPI DEPARTMENT OF TRANSPORTATION

EQUIPMENT DETAILS

SITE & SYSTEM BLOCK DIAGRAM

COUNTY: HANCOCK

PROJ. NO.: HSIP-0003-01(192)

FILENAME: ED-1.DGN

DESIGN TEAM ____ CHECKED ____ DATE ____

WORKING NUMBER ED-1

SHEET NUMBER 3017

PLAN
ROADWAY DESIGN DIVISION
MISSISSIPPI DEPARTMENT OF TRANSPORTATION

5/16/2018 16:17:06 ED-1.DGN

ADDENDUM

STATE	PROJECT NO.
MISS.	HSIP-0003-01(192)

DETAIL 1

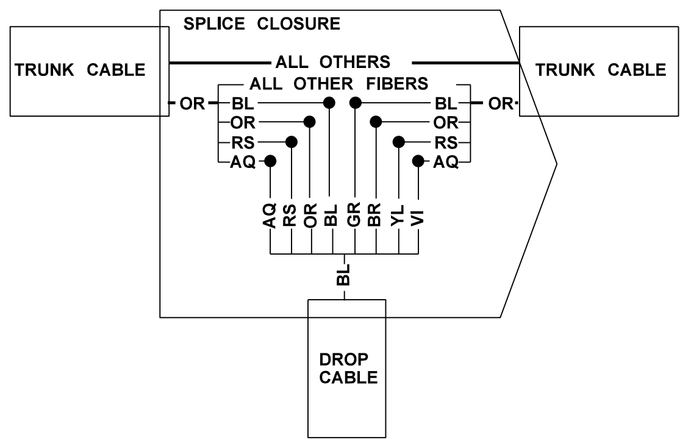

DETAIL 2

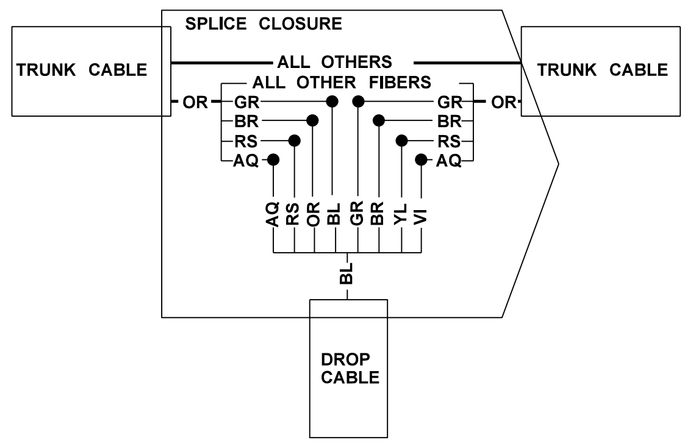

DETAIL 3

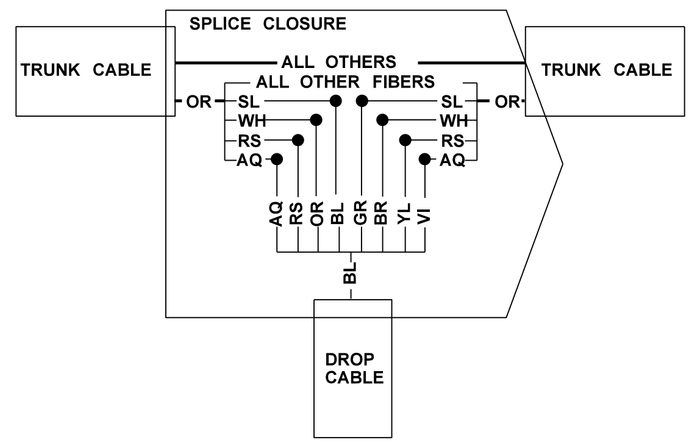

DETAIL 4

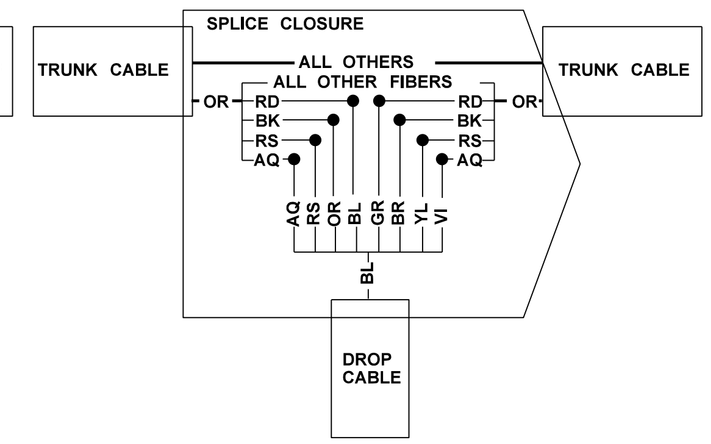

DETAIL 5

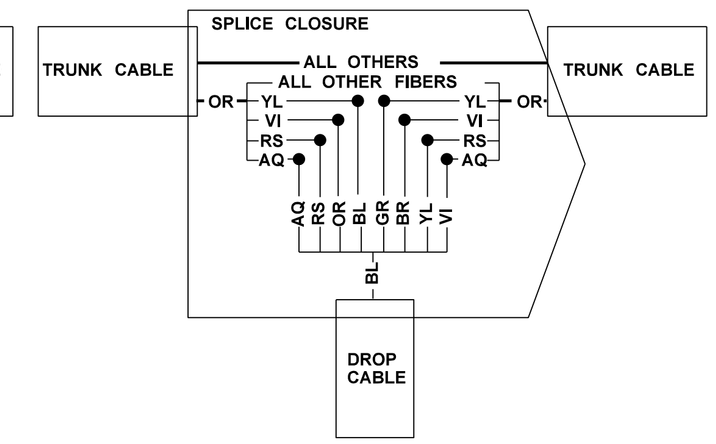

Splice and Network Switch Locations					
ITS Sheet	Approximate Station	Equipment Connected	Switch Type*	Fibers Used	Drop Detail
1	9+10	Terminate Fiber in Ex. Cabinet	N/A	ALL	N/A
1	19+50	Traffic Signal TSI-1, CCTV #1	A	13,14, 23, 24	1
2	54+90	Traffic Signal TSI-2, CCTV #2	A	15,16, 23, 24	2
2	61+00	DMS #1	A	17, 18, 23,24	3
3	84+45	Traffic Signal TSI-3, CCTV #3	A	19, 20, 23, 24	4
3	84+90	Terminate Fiber in Cabinet	E	N/A	N/A
3	94+10	Traffic Signal TSI-4	A	13,14, 23,24	1
4	107+00	DMS #2	A	15, 16, 23, 24	2
4	111+50	CCTV #4	A	1,2,3,4	6
5	125+80	Traffic Signal TSI-5	A	17,18, 23,24	3
5	148+90	Traffic Signal TSI-6	A	19, 20, 23, 24	4
6	160+25	Traffic Signal TSI-7	A	21, 22, 23, 24	5
7	192+10	Traffic Signal TSI-8, CCTV #5	A	13, 14, 23, 24	1
8	221+10	Traffic Signal TSI-9, CCTV #6	A	15, 16, 23, 24	2
9	265+70	Traffic Signal TSI-10, CCTV #7	A	17, 18, 23, 24	3
11	18+00	CCTV #8	A	13, 14, 23, 24	1
11	20+40	DMS # 3	A	15, 16, 23, 24	2

*To provide synchronization with existing network equipment, contractor shall supply Cisco Industrial Ethernet Switches.

DETAIL 6

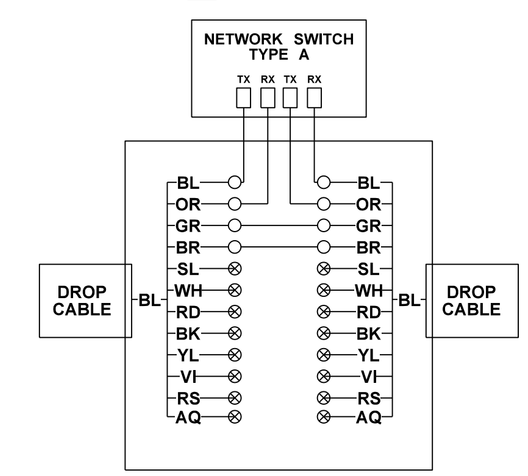

NOTE:

SPLICE DETAILS ARE SUBJECT TO FIELD VERIFICATION AND ENGINEER'S APPROVAL.

FIBER COLOR STANDARD

BL	BLUE	RD	RED
OR	ORANGE	BK	BLACK
GR	GREEN	YL	YELLOW
BR	BROWN	VI	VIOLET
SL	SLATE	RS	ROSE
WH	WHITE	AQ	AQUA

LEGEND

- FO CABLE
- FO BUFFER
- FO FIBER
- FUSION SPLICE
- UNTERMINATED FIBER(S) OR BUFFER(S)

DATE	REVISION	BY	WRT
05-15-18	ADDED DETAIL 6, REVISED TABLE		

MISSISSIPPI DEPARTMENT OF TRANSPORTATION

FIBER OPTIC DETAILS

FIBER SPLICING DETAIL

COUNTY: HANCOCK

PROJ. NO.: HSIP-0003-01(192)

FILENAME: FO-2.DGN

DESIGN TEAM _____ CHECKED _____ DATE _____

WORKING NUMBER FO-2

SHEET NUMBER 3020

PLAN
ROADWAY DESIGN DIVISION
MISSISSIPPI DEPARTMENT OF TRANSPORTATION
5/16/2018 16:18:35 FO-2.DGN