SECTION 905 -- PROPOSAL (CONTINUED)

I (We) hereby certify by digital signature and electronic submission via Bid Express of the Section 905 proposal below, that all certifications, disclosures and affidavits incorporated herein are deemed to be duly executed in the aggregate, fully enforceable and binding upon delivery of the bid proposal. I (We) further acknowledge that this certification shall not extend to the bid bond or alternate security which must be separately executed for the benefit of the Commission. This signature does not cure deficiencies in any required certifications, disclosures and/or affidavits. I (We) also acknowledge the right of the Commission to require full and final execution on any certification, disclosure or affidavit contained in the proposal at the Commission's election upon award. Failure to so execute at the Commission's request within the time allowed in the Standard Specifications for execution of all contract documents will result in forfeiture of the bid bond or alternate security.

Bidder acknowledges receipt of and has added to and made a part of the proposal and contract documents the following addendum (addenda):

ADDENDUM NO.	1	DATED	7/20/2018	ADDENDUM NO.		DATED	
ADDENDUM NO		DATED		ADDENDUM NO.		DATED	
ADDENDUM NO		DATED		ADDENDUM NO.		DATED	

Number	Description
1	Revised Table of Contents; Revised Specialty Items; Added NTB No. 1064; Revised Bid Items; Revised Progress Schedule; Amendment EBS Download Required.

TOTAL ADDENDA: 1
(Must agree with total addenda issued prior to opening of bids)

Respectfully Submitted,

DATE _____

_____
Contractor

BY _____
Signature

TITLE _____

ADDRESS _____

CITY, STATE, ZIP _____

PHONE _____

FAX _____

E-MAIL _____

(To be filled in if a corporation)

Our corporation is chartered under the Laws of the State of _____ and the names, titles and business addresses of the executives are as follows:

_____
President Address

_____
Secretary Address

_____
Treasurer Address

The following is my (our) itemized proposal.

HSIP-9999-01(254)/ 107530301000

District 1 County(ies)

Revised 01/26/2016

For Informational Purposes Only

MISSISSIPPI DEPARTMENT OF TRANSPORTATION
TABLE OF CONTENTS

PROJECT: HSIP-9999-01(254)/107530301 - District 1

Section 901 - Advertisement

Section 904 - Notice to Bidders

#1	Governing Specification
#2	Status of ROW, w/ Attachments
#3	Final Cleanup
#7	Disadvantaged Business Enterprise In Federal-Aid Highway Construction, w/ Supplement
#9	Federal Bridge Formula
#10	DUNS Requirement for Federal Funded Projects
#12	MASH Compliant Devices
#296	Reduced Speed Limit Signs
#401	Standard Drawings
#445	Mississippi Agent and Qualified Nonresident Agent
#516	Errata and Modifications to the 2017 Standard Specifications
#961	Contract Time
#962	Specialty Items
#963	Scope of Work
#1064	Plan Corrections, w/ Attachments

906 Required Federal Contract Provisions -- FHWA 1273, w/Supplements

Section 907 - Special Provisions

907-102-2	Bidding Requirements and Conditions
907-103-2	Award and Execution of Contract
907-619-6	Temporary Portable Rumble Strips
907-624-1	Inverted Profile Thermoplastic Traffic Stripe
907-630-1	Remove and Reset Signs
907-632-1	Traffic Signal Cabinet Assemblies
907-634-1	Traffic Signal and ITS Equipment Poles
907-636-2	Electrical Cable
907-637-2	Traffic Signal Conduit and Pull Boxes
907-641-1	Radar Vehicle Detection

Section 905 - Proposal, Proposal Bid Items, Combination Bid Proposal
Certification of Performance - Prior Federal-Aid Contracts
Certification Regarding Non-Collusion, Debarment and Suspension
SAM.GOV Registration and DUNS Number
Section 902 - Contract Form
Section 903 - Contract Bond Forms
Form -- OCR-485

Progress Schedule

PROJECT: HSIP-9999-01(254)/107530301 - District 1

(REVISIONS TO THE ABOVE WILL BE INDICATED ON THE SECOND SHEET
OF SECTION 905 AS ADDENDA)

07/20/2018 09:12 AM

MISSISSIPPI DEPARTMENT OF TRANSPORTATION

SECTION 904 - NOTICE TO BIDDERS NO. 962

DATE: July 20, 2018

SUBJECT: Specialty Items

PROJECT: HSIP-9999-01(254)/107530301 - DISTRICT 1

Pursuant to the provisions of Section 108, the following work items are hereby designated as "Specialty Items" for this contract. Bidders are reminded that these items must be subcontracted in order to be considered as specialty items.

CATEGORY: PAVEMENT STRIPING AND MARKING

Line No	Pay Item	Description
0150	626-A003	6" Thermoplastic Traffic Stripe, Skip White
0160	626-B003	6" Thermoplastic Traffic Stripe, Continuous White
0170	626-C003	6" Thermoplastic Edge Stripe, Continuous White
0180	626-D004	6" Thermoplastic Traffic Stripe, Skip Yellow
0190	626-E003	6" Thermoplastic Traffic Stripe, Continuous Yellow
0200	626-F004	6" Thermoplastic Edge Stripe, Continuous Yellow
0210	626-G002	Thermoplastic Detail Stripe, White
0220	626-G003	Thermoplastic Detail Stripe, Yellow
0230	626-H004	Thermoplastic Legend, White
0240	626-H005	Thermoplastic Legend, White
0250	627-J001	Two-Way Clear Reflective High Performance Raised Markers
0260	627-K001	Red-Clear Reflective High Performance Raised Markers
0270	627-L001	Two-Way Yellow Reflective High Performance Raised Markers
0610	628-H001	6" High Performance Cold Plastic Traffic Stripe, Continuous White
0620	628-J001	6" High Performance Cold Plastic Traffic Stripe, Continuous Yellow
0630	628-K001	High Performance Cold Plastic Detail Stripe, White
0640	628-K002	High Performance Cold Plastic Detail Stripe, Yellow

CATEGORY: TRAFFIC CONTROL - PERMANENT

Line No	Pay Item	Description
0280	630-A001	Standard Roadside Signs, Sheet Aluminum, 0.080" Thickness
0290	630-A003	Standard Roadside Signs, Sheet Aluminum, 0.125" Thickness
0300	630-C002	Steel U-Section Posts, 2.0 lb/ft
0310	630-C003	Steel U-Section Posts, 3.0 lb/ft
0320	630-D008	Structural Steel Beams, W6 x 9
0330	630-E001	Structural Steel Angles & Bars, 3 1/2" x 3 1/2" x 1/4" Angles
0340	630-E004	Structural Steel Angles & Bars, 7/16" x 2 1/2" Flat Bar
0350	630-K001	Welded & Seamless Steel Pipe Posts, 3 1/2"
0360	630-K002	Welded & Seamless Steel Pipe Posts, 3"
0370	630-K003	Welded & Seamless Steel Pipe Posts, 4"
0371	638-A001	Flasher Assembly
0401	638-C001	Flasher Assembly - Solar Powered
0410	660-A003	Equipment Cabinet, Type B

CATEGORY: TRAFFIC CONTROL - PERMANENT

Line No	Pay Item	Description
0430	907-630-O001	Remove and Reset Sign Assembly
0460	907-634-F002	Detector Pole with Foundation, 35' Pole
0470	907-634-F004	Detector Pole with Foundation, 25' Pole
0471	907-634-I001	Wood Pole, Class II Height 40'
0480	907-636-B014	Electric Cable, Underground in Conduit, IMSA 20-1, AWG 14, 5 Conductor
0490	907-636-B028	Electric Cable, Underground in Conduit, IMSA 20-1, AWG 8, 3 Conductor
0500	907-637-A002	Pullbox Enclosure, Type 2
0510	907-637-A003	Pullbox Enclosure, Type 3
0520	907-637-C028	Traffic Signal Conduit, Underground, Type 4, 2"
0530	907-637-D002	Traffic Signal Conduit, Underground Drilled or Jacked, Rolled Pipe, 2"
0531	907-637-F005	Traffic Signal Conduit, Aerial Supported, Type 1, 2"
0540	907-641-A002	Signal Stop Bar Radar Vehicle Detection Sensor, Type 2
0550	907-641-B002	Signal Advanced Radar Vehicle Detection Sensor, Type 2
0560	907-641-D001	Radar Vehicle Detection Cable

CATEGORY: TRAFFIC CONTROL - TEMPORARY

Line No	Pay Item	Description
0070	619-A1002	Temporary Traffic Stripe, Continuous White
0080	619-A2002	Temporary Traffic Stripe, Continuous Yellow
0090	619-A3002	Temporary Traffic Stripe, Skip White
0100	619-A4001	Temporary Traffic Stripe, Skip Yellow
0110	619-A5001	Temporary Traffic Stripe, Detail
0120	619-A6001	Temporary Traffic Stripe, Legend
0130	619-A6002	Temporary Traffic Stripe, Legend
0420	907-619-B001	Temporary Portable Rumble Strips

MISSISSIPPI DEPARTMENT OF TRANSPORTATION

SECTION 904 – NOTICE TO BIDDERS NO. 1064 **CODE: (SP)**

DATE: **07/20/2018**

SUBJECT: **Plan Corrections**

PROJECT: **HSIP-9999-01(254) / 107530301 -- Districtwide 1**

Bidders are advised that at Site 1 (US 82 at SR 389), an additional Type 2 Pullbox on the Northeast side immediately before the 389 bridge will be required. From this location, Type 1 Rigid Conduit will run aerially along the bridge and tie into the Pullbox that is shown on the South side of the bridge. To achieve this, the following changes have been made to the bid sheets.

- Pay item no. 907-637-A002, Pullbox Enclosure, Type 2, is shown as having a quantity of 39 Each. This is in error. The correct quantity is **40 Each.** The bid sheets are correct.

- The Scope of Work does not include pay item no. 907-637-F005, Traffic Signal Conduit, Aerial Supported, Type 1, 2". A Quantity of **500 LF** has been added to the bid sheets. Conduit is structure-attached conduit and includes all hangers, expansion assemblies, and surface-mounted pullboxes. See attached drawings for details.

Bidders are further advised of the following changes regarding Notice to Bidders 963, Scope of Work.

- New poles will be placed for each pole mounted cabinet. The Scope of Work does not include pay item no. 907-634-I001, Wood Pole, Class II Height 40'. A quantity of **4 Each** has been added to the bid sheets.

- The Scope of Work does not include pay item no. 638-C001, Flasher Assembly, Solar Powered. A Quantity of **4 Each** has been added to the bid sheets. These assemblies will be used with the sign reference as No. 2 on PSP-3, for the W3-1, Stop Ahead signs on CR 5031. Pay item no. 638-A002, Flasher Assembly, Advanced Warning is not needed and has been deleted from the bid sheets.

- The Scope of Work does not include pay item no. 638-A001, Flasher Assembly, ICWS. A quantity of **23 Each** has been added to the bid sheets. Pay item no. 638-A004, Flasher Assembly, ICWS, Watch for Traffic, and Pay item no. 638-A005, Flasher Assembly, ICWS, Watch for Entering Traffic, will not be needed and have been deleted from the bid sheets. All signs associated with these locations will be paid for under either 630-A001, Standard Roadside Signs, Sheet Aluminum, 0.080" Thickness, or 630-A003, Standard Roadside Signs, Sheet Aluminum, 0.125" Thickness.

FMS CON: UPDATE UPDATE

STATE	PROJECT NO.
MISS.	UPDATE

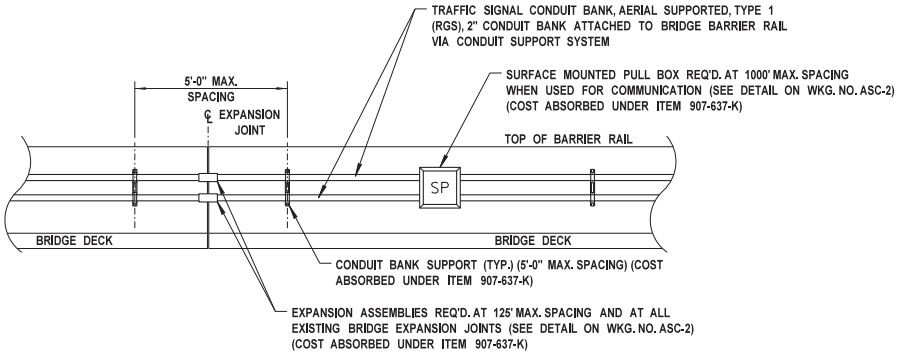

ELEVATION VIEW - COMMUNICATION ONLY

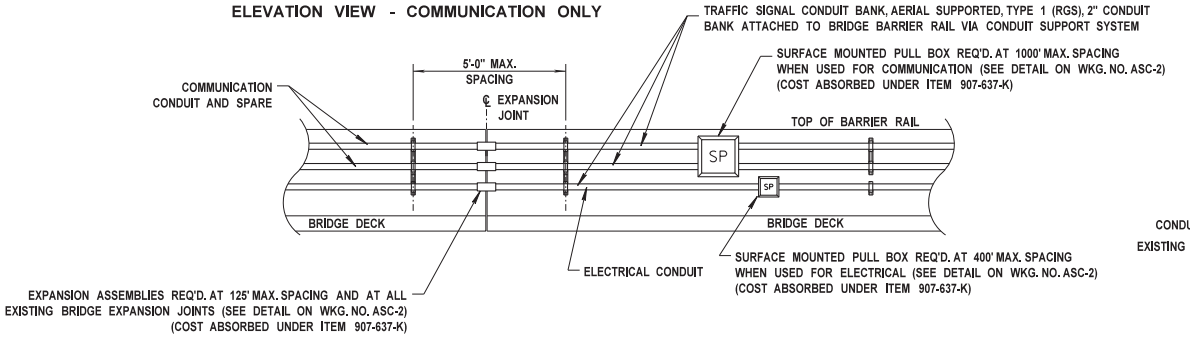

ELEVATION VIEW - COMMUNICATION + ELECTRICAL

TYPICAL BRIDGE BARRIER RAIL INSTALLATION

NOT TO SCALE

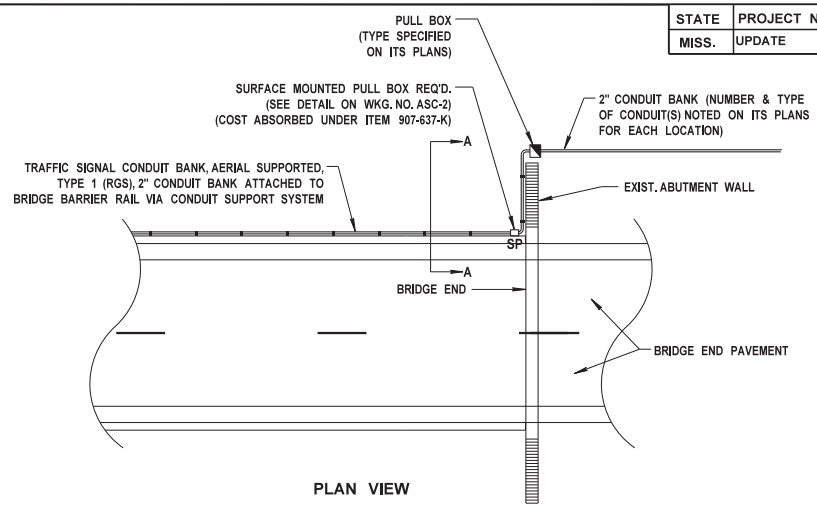

PLAN VIEW

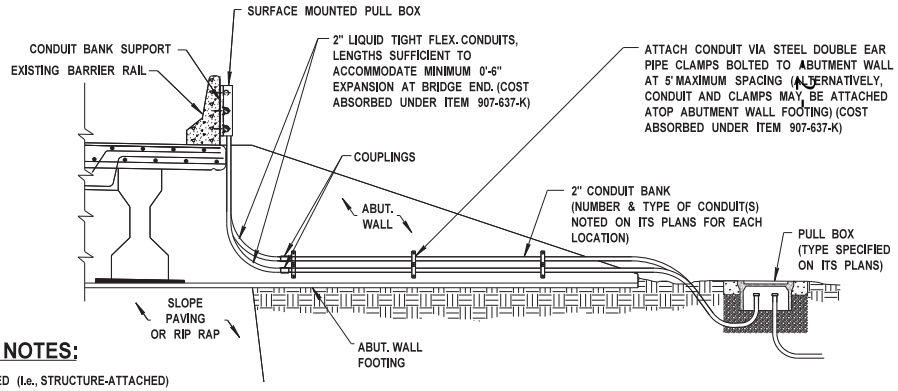

SECTION A-A

TYPICAL CONDUIT ATTACHMENT TO BRIDGE ABUTMENT WALL

NOT TO SCALE

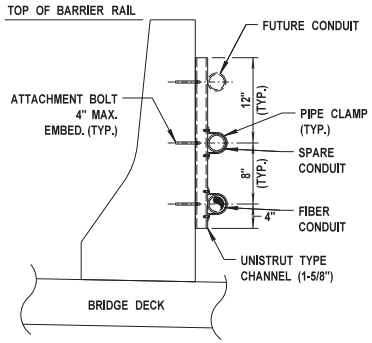

SECTION VIEW
FIBER ONLY

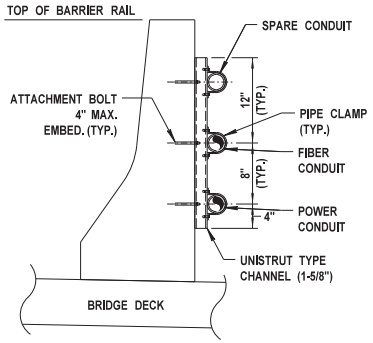

SECTION VIEW
FIBER + ELECTRICAL

TYPICAL CONDUIT BANK SUPPORT

NOT TO SCALE

AERIAL SUPPORTED CONDUIT NOTES:

1. REFER TO ITS PLAN SHEETS FOR AERIAL SUPPORTED (i.e., STRUCTURE-ATTACHED) CONDUIT LOCATIONS.
2. THE CONDUIT BANK SUPPORT SYSTEM IS TO BE ATTACHED TO THE OUTSIDE FACE OF THE BRIDGE BARRIER RAIL. THE DETAILS SHOWN FOR THE SUPPORT SYSTEM ARE TO SERVE AS A GUIDE ONLY. CONTRACTOR SHALL SUBMIT SHOP DRAWINGS FOR THE SUPPORT SYSTEM TO THE PROJECT ENGINEER FOR REVIEW AND APPROVAL.
3. NO WELDING OR DRILLING TO STRUCTURAL STEEL WILL BE PERMITTED. ATTACHMENT TO STRUCTURAL STEEL SHALL BE MADE BY CLAMPS, STRAPS, ETC.
4. ALL AERIAL SUPPORTED CONDUIT SHALL BE 2" TYPE 1 (RGS) UNLESS OTHERWISE NOTED ON PLANS, EXCEPT FOR SHORT SEGMENTS OF 2" LIQUID TIGHT FLEXIBLE CONDUIT TO BE USED AT BRIDGE ABUTMENTS, EXISTING BRIDGE EXPANSION JOINTS, AND AS INDICATED IN THE PLANS.
5. IN ALL CASES, THE CONDUIT SUPPORT SPACING SHALL BE A MAXIMUM OF FIVE (5) FEET.
6. CONDUIT SHALL NOT BE INSTALLED IN A MANNER WHICH OBSTRUCTS EXISTING BRIDGE DECK DRAINS.
7. CORE DRILLING OF EXISTING BRIDGE ABUTMENTS WILL NOT BE PERMITTED.

REVISION	BY	DATE

MISSISSIPPI DEPARTMENT OF TRANSPORTATION

AERIAL SUPPORTED CONDUIT

TYPE 1 (RGS) CONDUIT
NOTES AND
TYPICAL DETAILS

PROJ. NO.: UPDATE
COUNTY: UPDATE

WORKING NUMBER ASC-1

SHEET NUMBER 1

FILENAME: rwd.cel
DESIGN TEAM UPDATE CHECKED UPDATE DATE

Notice to Bidder No. 1064 - Cont'd

PLAN
MISSISSIPPI DEPARTMENT OF TRANSPORTATION
ROADWAY DIVISION

6/6/2018 1:16 PM ASC.DGN

FMS CON: UPDATE UPDATE

STATE	PROJECT NO.
MISS.	UPDATE

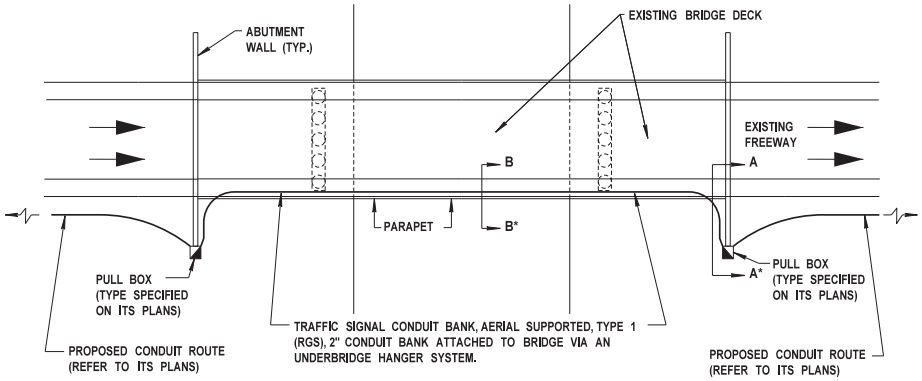

TYPICAL BRIDGE PLAN

NOT TO SCALE

* SEE TYPICAL SECTIONS THIS SHEET

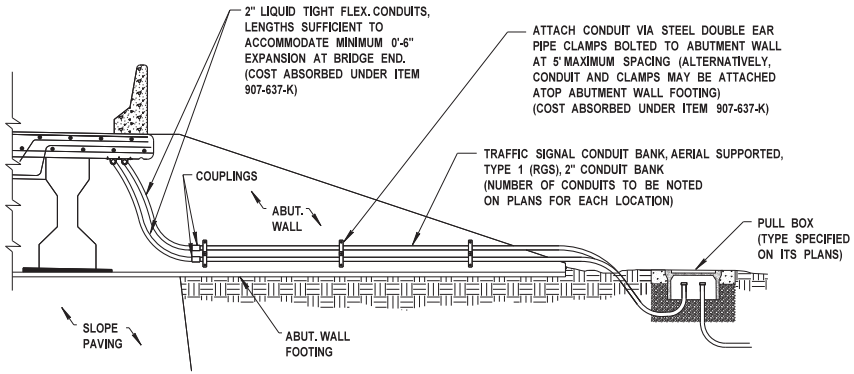

SECTION A-A: TYPICAL CONDUIT ATTACHMENT TO BRIDGE ABUTMENT WALL

NOT TO SCALE

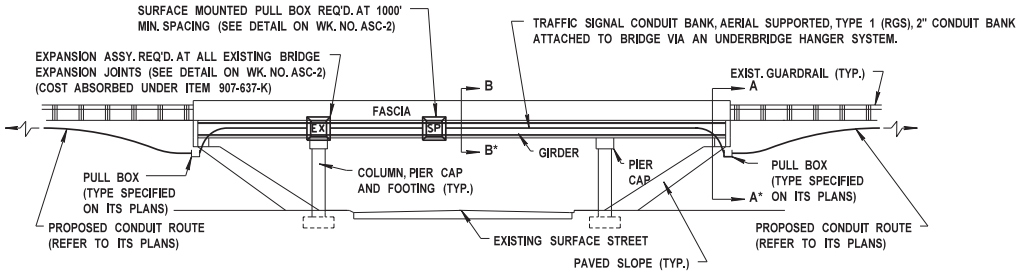

TYPICAL BRIDGE PROFILE

NOT TO SCALE

* SEE TYPICAL SECTIONS THIS SHEET

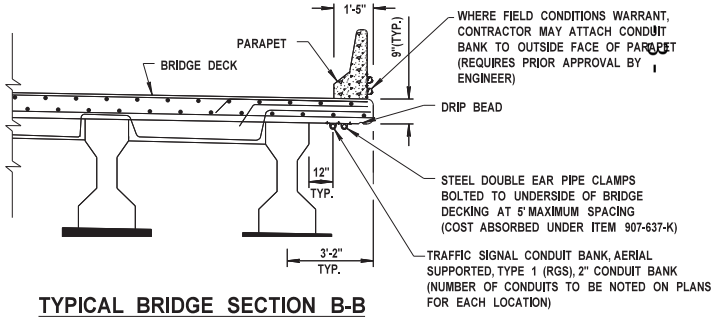

TYPICAL BRIDGE SECTION B-B

NOT TO SCALE

AERIAL SUPPORTED CONDUIT NOTES:

1. REFER TO ITS PLAN SHEETS FOR AERIAL SUPPORTED (i.e., STRUCTURE-ATTACHED) CONDUIT LOCATIONS.
2. THE CONDUIT HANGER SYSTEM IS TO BE SUSPENDED BENEATH THE BRIDGE DECK, CENTERED APPROXIMATELY BETWEEN THE OUTERMOST GIRDER AND BRIDGE PARAPET. ALL CONDUIT, HANGERS, EXPANSIONS, ETC. MUST BE ABOVE THE LOW POINT OF EACH SUPERSTRUCTURE. WHERE BELOW DECK OBSTRUCTIONS OR OTHER FIELD CONDITIONS WARRANT, CONTRACTOR MAY BE ALLOWED TO ATTACH CONDUIT BANK TO OUTER FACE OF BRIDGE PARAPET, PENDING APPROVAL BY THE ENGINEER.
3. NO WELDING OR DRILLING TO STRUCTURAL STEEL WILL BE PERMITTED. ATTACHMENT TO STRUCTURAL STEEL SHALL BE MADE BY CLAMPS, STRAPS, ETC.
4. ALL AERIAL SUPPORTED CONDUIT SHALL BE 2" TYPE 1 (RGS) UNLESS OTHERWISE NOTED ON PLANS, EXCEPT FOR SHORT SEGMENTS OF 2" LIQUID TIGHT FLEXIBLE CONDUIT TO BE USED AT BRIDGE ABUTMENTS, EXISTING BRIDGE EXPANSION JOINTS, AND AS INDICATED IN THE PLANS.
5. IN ALL CASES, THE CONDUIT SUPPORT SPACING SHALL BE A MAXIMUM OF FIVE (5) FEET.
6. CONDUIT SHALL NOT BE INSTALLED IN A MANNER WHICH OBSTRUCTS EXISTING BRIDGE DECK DRAINS.
7. CORE DRILLING OF EXISTING BRIDGE ABUTMENTS WILL NOT BE ALLOWED, UNLESS SPECIFICALLY REVIEWED AND APPROVED BY THE MDOT BRIDGE DIVISION.

DATE	REVISION	BY

MISSISSIPPI DEPARTMENT OF TRANSPORTATION

AERIAL SUPPORTED CONDUIT

NOTES AND TYPICAL DETAILS

PROJ. NO.: UPDATE

COUNTY: UPDATE

FILENAME: rwd.cel

DESIGN TEAM UPDATE CHECKED UPDATE DATE

WORKING NUMBER ASC-1

SHEET NUMBER 2

Notice to Bidder No. 1064 - Cont'd

PLAN
RIGHT OF WAY DIVISION
MISSISSIPPI DEPARTMENT OF TRANSPORTATION

6/6/2018 1:16 PM ASC.DGN

FMS CON: UPDATE UPDATE

STATE	PROJECT NO.
MISS.	UPDATE

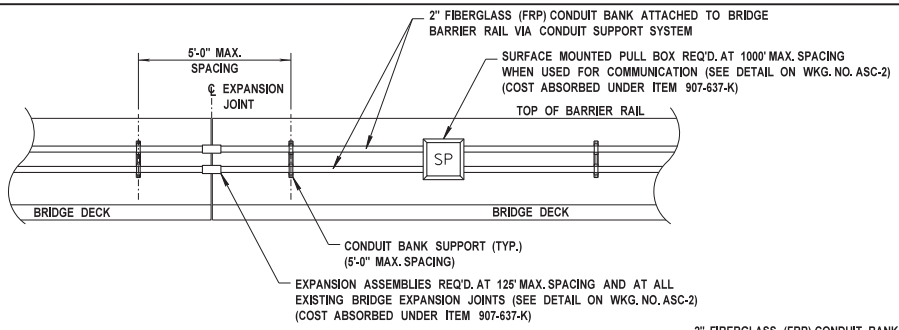

ELEVATION VIEW - COMMUNICATION ONLY

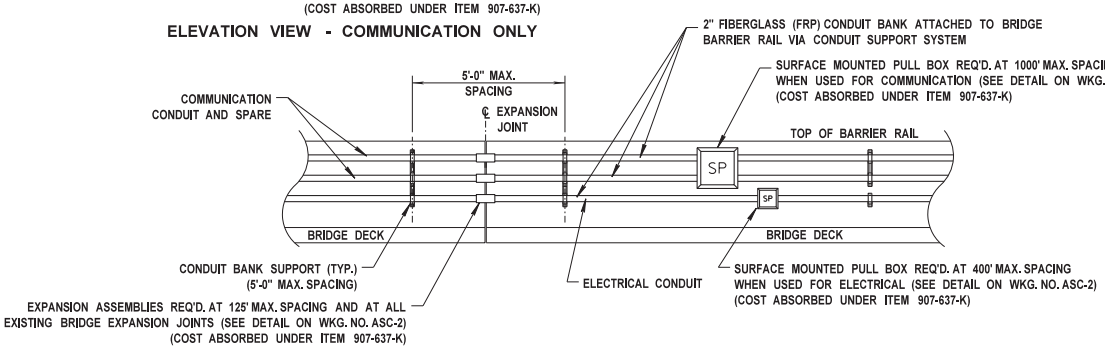

ELEVATION VIEW - COMMUNICATION + ELECTRICAL

TYPICAL BRIDGE BARRIER RAIL INSTALLATION

NOT TO SCALE

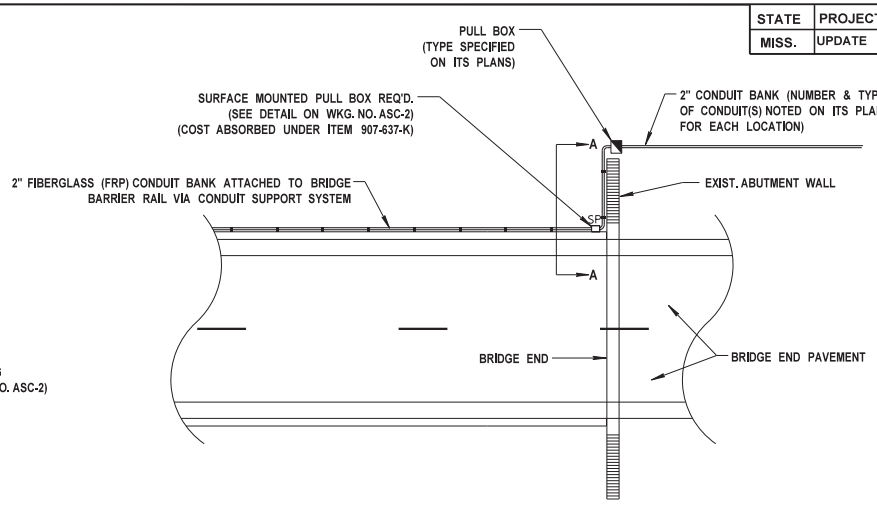

PLAN VIEW

TYPICAL CONDUIT ATTACHMENT TO BRIDGE ABUTMENT WALL

NOT TO SCALE

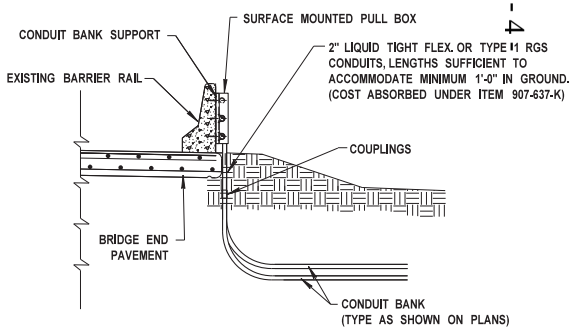

SECTION A-A

TYPICAL CONDUIT ATTACHMENT AT BARRIER RAIL

NOT TO SCALE

AERIAL SUPPORTED CONDUIT NOTES:

1. REFER TO ITS PLAN SHEETS FOR AERIAL SUPPORTED (i.e., STRUCTURE-ATTACHED) CONDUIT LOCATIONS.
2. THE CONDUIT BANK SUPPORT SYSTEM IS TO BE ATTACHED TO THE OUTSIDE FACE OF THE BRIDGE BARRIER RAIL. THE DETAILS SHOWN FOR THE SUPPORT SYSTEM ARE TO SERVE AS A GUIDE ONLY. CONTRACTOR SHALL SUBMIT SHOP DRAWINGS FOR THE SUPPORT SYSTEM TO THE PROJECT ENGINEER FOR REVIEW AND APPROVAL.
3. NO WELDING OR DRILLING TO STRUCTURAL STEEL WILL BE PERMITTED. ATTACHMENT TO STRUCTURAL STEEL SHALL BE MADE BY CLAMPS, STRAPS, ETC.
4. ALL AERIAL SUPPORTED CONDUIT SHALL BE EITHER 2" FIBERGLASS (FRP) OR 2" TYPE 1 (RGS) AS NOTED ON PLANS, EXCEPT FOR SHORT SEGMENTS OF 2" LIQUID TIGHT FLEXIBLE CONDUIT TO BE USED AT BRIDGE ABUTMENTS, EXISTING BRIDGE EXPANSION JOINTS, AND AS INDICATED IN THE PLANS.
5. IN ALL CASES, THE CONDUIT SUPPORT SPACING SHALL BE A MAXIMUM OF FIVE (5) FEET.
6. CONDUIT SHALL NOT BE INSTALLED IN A MANNER WHICH OBSTRUCTS EXISTING BRIDGE DECK DRAINS.
7. CORE DRILLING OF EXISTING BRIDGE ABUTMENTS WILL NOT BE PERMITTED.

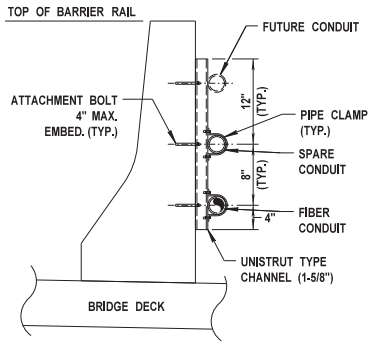

SECTION VIEW
FIBER ONLY

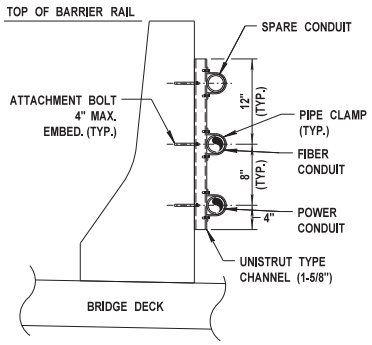

SECTION VIEW
FIBER + ELECTRICAL

TYPICAL CONDUIT BANK SUPPORT

NOT TO SCALE

REVISION	BY	DATE

MISSISSIPPI DEPARTMENT OF TRANSPORTATION

AERIAL SUPPORTED CONDUIT

FIBERGLASS (FRP) CONDUIT
NOTES AND
TYPICAL DETAILS

PROJ. NO.: UPDATE
COUNTY: UPDATE

FILENAME: rwd.cel
DESIGN TEAM UPDATE CHECKED UPDATE DATE

WORKING NUMBER ASC-1
SHEET NUMBER 3

PLAN
ROADWAY DESIGN DIVISION
MISSISSIPPI DEPARTMENT OF TRANSPORTATION

6/6/2018 1:16 PM ASC.DGN

Notice to Bidder No. 1064 - 4 - Cont'd

STATE	PROJECT NO.
MISS.	UPDATE

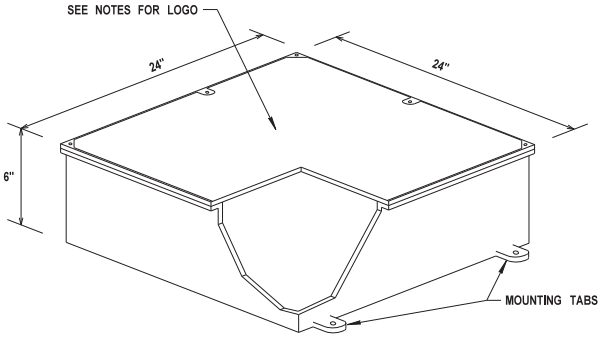

COMMUNICATION PULL BOX

TYPICAL SURFACE MOUNTED PULL BOX ASSEMBLY

NOT TO SCALE

SHOWN AS

NOTES FOR SURFACE MOUNTED PULL BOX:

1. PULL BOX SHALL BE UL RATED TYPE 4X ALUMINUM.
2. COMM. PULL BOX LIDS SHALL BE LABELED "MDOT ITS COMMUNICATIONS".
3. DIMENSIONS ARE MINIMUMS.
4. MAXIMUM SPACING BETWEEN PULL BOXES SHALL BE 1000'. CONTRACTOR MAY, AT HIS DISCRETION, FURNISH AND INSTALL ADDITIONAL PULL BOXES SHOULD HE DEEM THEM NECESSARY TO PROVIDE A COMPLETE AERIAL CABLE/CONDUIT INSTALLATION.
5. COST OF ALL SURFACE MOUNTED PULL BOXES SHALL BE ABSORBED UNDER ITEM NO. 907-637-K, AERIAL SUPPORTED CONDUIT BANK.

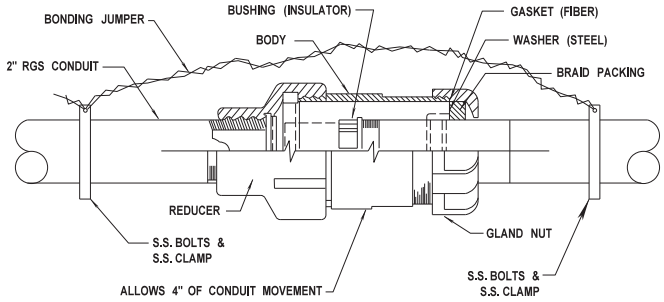

TYPICAL AERIAL CONDUIT EXPANSION ASSEMBLY

NOT TO SCALE

NOTES FOR EXPANSION ASSEMBLY:

1. THE DETAIL ABOVE IS TO SERVE AS A GUIDE ONLY. CONTRACTOR SHALL COORDINATE INSTALLATION OF EXPANSION ASSEMBLIES WITH THE MDOT BRIDGE DIVISION TO ENSURE THAT ANTICIPATED BRIDGE EXPANSION IS ADEQUATELY ACCOMMODATED AT EACH JOINT.
2. NO PORTION OF EXPANSION ASSEMBLY SHALL HANG BELOW BRIDGE SUPERSTRUCTURE.
3. COST OF EXPANSION ASSEMBLIES SHALL BE ABSORBED UNDER ITEM NO. 907-637-K, AERIAL SUPPORTED CONDUIT BANK.
4. EXPANSION ASSEMBLIES SHALL BE REQUIRED AT 125' MAX. SPACING AND AT ALL EXISTING BRIDGE EXPANSION JOINTS.

DATE	REVISION	BY

MISSISSIPPI DEPARTMENT OF TRANSPORTATION

AERIAL SUPPORTED CONDUIT

TYPE 1 (RGS) CONDUIT
SURFACE MOUNTED PULL BOX
AND EXPANSION DETAILS
(FIBER ONLY)

PROJ. NO.: UPDATE
COUNTY: UPDATE

FILENAME: rwd.cel
DESIGN TEAM UPDATE CHECKED UPDATE DATE

WORKING NUMBER
ASC-2
SHEET NUMBER
4

PLAN
ROADWAY DESIGN DIVISION
MISSISSIPPI DEPARTMENT OF TRANSPORTATION

6/6/2018 1:16 PM ASC.DGN

STATE	PROJECT NO.
MISS.	UPDATE

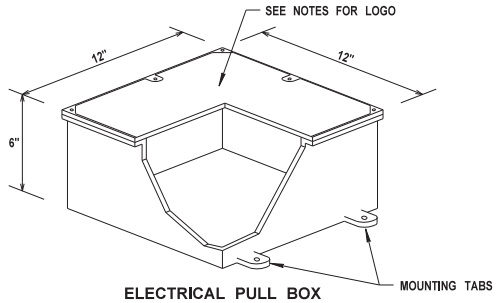

ELECTRICAL PULL BOX

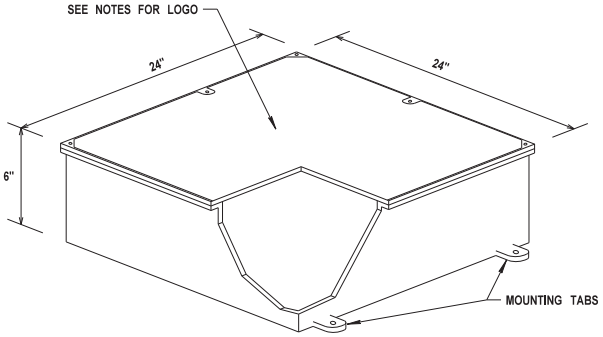

COMMUNICATION PULL BOX

TYPICAL SURFACE MOUNTED PULL BOX ASSEMBLY

NOT TO SCALE

SHOWN AS

NOTES FOR SURFACE MOUNTED PULL BOX:

1. PULL BOX SHALL BE UL RATED TYPE 4X ALUMINUM.
2. ELECTRICAL POWER PULL BOX LIDS SHALL BE LABELED "MDOT ITS ELECTRIC".
3. COMM. PULL BOX LIDS SHALL BE LABELED "MDOT ITS COMMUNICATIONS".
4. DIMENSIONS ARE MINIMUMS.
5. MAXIMUM SPACING BETWEEN PULL BOXES SHALL BE 1000' FOR COMMUNICATION BOXES AND 400' FOR ELECTRICAL BOXES. CONTRACTOR MAY, AT HIS DISCRETION, FURNISH AND INSTALL ADDITIONAL PULL BOXES SHOULD HE DEEM THEM NECESSARY TO PROVIDE A COMPLETE AERIAL CABLE/CONDUIT INSTALLATION.
6. COST OF ALL SURFACE MOUNTED PULL BOXES SHALL BE ABSORBED UNDER ITEM NO. 907-637-K, AERIAL SUPPORTED CONDUIT BANK.

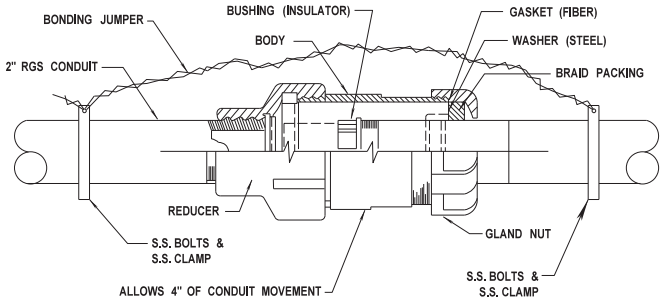

TYPICAL AERIAL CONDUIT EXPANSION ASSEMBLY

NOT TO SCALE

SHOWN AS (IF SHOWN)

NOTES FOR EXPANSION ASSEMBLY:

1. THE DETAIL ABOVE IS TO SERVE AS A GUIDE ONLY. CONTRACTOR SHALL COORDINATE INSTALLATION OF EXPANSION ASSEMBLIES WITH THE MDOT BRIDGE DIVISION TO ENSURE THAT ANTICIPATED BRIDGE EXPANSION IS ADEQUATELY ACCOMMODATED AT EACH JOINT.
2. NO PORTION OF EXPANSION ASSEMBLY SHALL HANG BELOW BRIDGE SUPERSTRUCTURE.
3. COST OF EXPANSION ASSEMBLIES SHALL BE ABSORBED UNDER ITEM NO. 907-637-K, AERIAL SUPPORTED CONDUIT BANK.
4. EXPANSION ASSEMBLIES SHALL BE REQUIRED AT 125' MAX. SPACING AND AT ALL EXISTING BRIDGE EXPANSION JOINTS.

DATE	REVISION	BY

MISSISSIPPI DEPARTMENT OF TRANSPORTATION

AERIAL SUPPORTED CONDUIT

TYPE 1 (RGS) CONDUIT
SURFACE MOUNTED PULL BOX
AND EXPANSION DETAILS
(FIBER AND POWER)

PROJ. NO.: UPDATE
COUNTY: UPDATE

FILENAME: rwd.cel
DESIGN TEAM UPDATE CHECKED UPDATE DATE

WORKING NUMBER
ASC-2
SHEET NUMBER
5

PLAN
ROADWAY DESIGN DIVISION
MISSISSIPPI DEPARTMENT OF TRANSPORTATION

6/6/2018 1:16 PM ASC.DGN

STATE	PROJECT NO.
MISS.	UPDATE

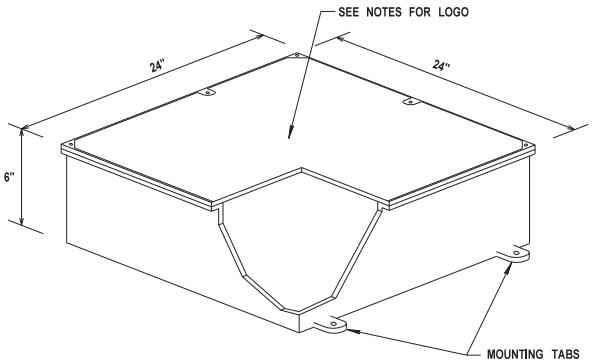

COMMUNICATION PULL BOX

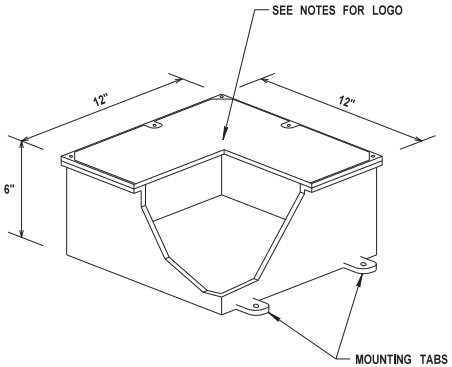

ELECTRICAL PULL BOX

TYPICAL SURFACE MOUNTED PULL BOX ASSEMBLY

NOT TO SCALE

SHOWN AS

NOTES FOR SURFACE MOUNTED PULL BOX:

1. PULL BOX SHALL BE UL RATED TYPE 4X ALUMINUM.
2. ELECTRICAL POWER PULL BOX LIDS SHALL BE LABELED "MDOT ITS ELECTRIC".
3. COMM. PULL BOX LIDS SHALL BE LABELED "MDOT ITS COMMUNICATIONS".
4. DIMENSIONS ARE MINIMUMS.
5. MAXIMUM SPACING BETWEEN PULL BOXES SHALL BE 1000' FOR COMMUNICATION BOXES AND 400' FOR ELECTRICAL BOXES. CONTRACTOR MAY, AT HIS DISCRETION, FURNISH AND INSTALL ADDITIONAL PULL BOXES SHOULD HE DEEM THEM NECESSARY TO PROVIDE A COMPLETE AERIAL CABLE/CONDUIT INSTALLATION.
6. COST OF ALL SURFACE MOUNTED PULL BOXES SHALL BE ABSORBED UNDER ITEM NO. 907-637-K, AERIAL SUPPORTED CONDUIT BANK.

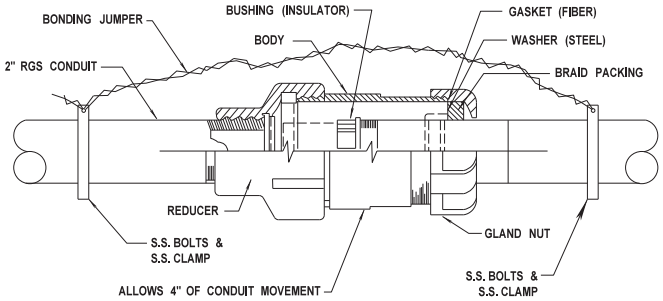

EXPANSION ASSEMBLY FOR TYPE 1 (RGS) CONDUIT

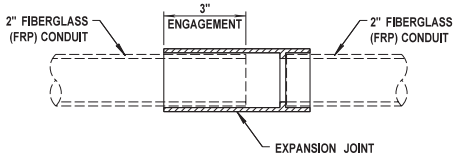

SINGLE EXPANSION FOR FIBERGLASS (FRP) CONDUIT

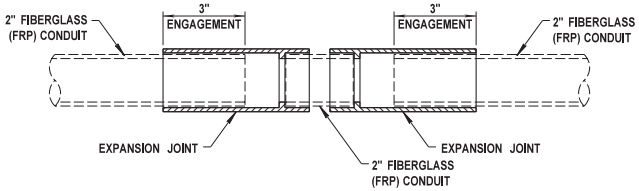

DOUBLE EXPANSION FOR FIBERGLASS (FRP) CONDUIT

TYPICAL AERIAL CONDUIT EXPANSION ASSEMBLIES

NOT TO SCALE

EXPANSION ASSEMBLIES NOTES:

1. THE DETAIL ABOVE IS TO SERVE AS A GUIDE ONLY. CONTRACTOR SHALL INSTALL ACCORDING TO CONDUIT MANUFACTURER'S GUIDELINES. CONTRACTOR SHALL COORDINATE INSTALLATION OF EXPANSION ASSEMBLIES WITH THE MDOT BRIDGE DIVISION TO ENSURE THAT ANTICIPATED BRIDGE EXPANSION IS ADEQUATELY ACCOMMODATED AT EACH JOINT.
2. COST OF EXPANSION ASSEMBLIES SHALL BE ABSORBED UNDER ITEM NO. 907-637-K, AERIAL SUPPORTED CONDUIT BANK.
3. EXPANSION ASSEMBLIES SHALL BE REQUIRED AT 125' MAX. SPACING AND AT ALL EXISTING BRIDGE EXPANSION JOINTS.

REVISION	BY	DATE

MISSISSIPPI DEPARTMENT OF TRANSPORTATION

AERIAL SUPPORTED CONDUIT

TYPE 1 OR FIBERGLASS CONDUIT SURFACE MOUNTED PULL BOX AND EXPANSION DETAILS

PROJ. NO.: UPDATE
COUNTY: UPDATE

WORKING NUMBER ASC-2

SHEET NUMBER 6

FILENAME: rwd.cel
DESIGN TEAM UPDATE CHECKED UPDATE DATE

PLAN
ROADWAY DIVISION
MISSISSIPPI DEPARTMENT OF TRANSPORTATION

6/6/2018 1:16 PM ASC.DGN

Installation of Intersection Conflict Warning Systems at numerous intersections across the District, known as Federal Aid Project No. HSIP-9999-01(254) / 107530301 in District 1.

Line No.	Item Code	Adj Code	Quantity	Units	Description [Fixed Unit Price]
				Roadway Items	
0010	202-B215		85	Each	Removal of Sign Including Post & Footing
0020	202-B240		12,384	Linear Feet	Removal of Traffic Stripe
0030	601-A001	(S)	8	Cubic Yard	Class "B" Structural Concrete
0040	602-A001	(S)	58	Pounds	Reinforcing Steel
0050	618-A001		1	Lump Sum	Maintenance of Traffic
0060	618-B001		1	Square Feet	Additional Construction Signs [$10.00]
0070	619-A1002		5,811	Linear Feet	Temporary Traffic Stripe, Continuous White
0080	619-A2002		5,681	Linear Feet	Temporary Traffic Stripe, Continuous Yellow
0090	619-A3002		1,000	Linear Feet	Temporary Traffic Stripe, Skip White
0100	619-A4001		1,000	Linear Feet	Temporary Traffic Stripe, Skip Yellow
0110	619-A5001		215	Linear Feet	Temporary Traffic Stripe, Detail
0120	619-A6001		208	Square Feet	Temporary Traffic Stripe, Legend
0130	619-A6002		69	Linear Feet	Temporary Traffic Stripe, Legend
0140	620-A001		1	Lump Sum	Mobilization
0150	626-A003		2,480	Linear Feet	6" Thermoplastic Traffic Stripe, Skip White
0160	626-B003		4,886	Linear Feet	6" Thermoplastic Traffic Stripe, Continuous White
0170	626-C003		10,400	Linear Feet	6" Thermoplastic Edge Stripe, Continuous White
0180	626-D004		860	Linear Feet	6" Thermoplastic Traffic Stripe, Skip Yellow
0190	626-E003		18,702	Linear Feet	6" Thermoplastic Traffic Stripe, Continuous Yellow
0200	626-F004		2,695	Linear Feet	6" Thermoplastic Edge Stripe, Continuous Yellow
0210	626-G002		10,928	Linear Feet	Thermoplastic Detail Stripe, White
0220	626-G003		2,609	Linear Feet	Thermoplastic Detail Stripe, Yellow
0230	626-H004		694	Square Feet	Thermoplastic Legend, White
0240	626-H005		1,144	Linear Feet	Thermoplastic Legend, White
0250	627-J001		20	Each	Two-Way Clear Reflective High Performance Raised Markers
0260	627-K001		68	Each	Red-Clear Reflective High Performance Raised Markers
0270	627-L001		471	Each	Two-Way Yellow Reflective High Performance Raised Markers
0280	630-A001		190	Square Feet	Standard Roadside Signs, Sheet Aluminum, 0.080" Thickness
0290	630-A003		381	Square Feet	Standard Roadside Signs, Sheet Aluminum, 0.125" Thickness
0300	630-C002		61	Linear Feet	Steel U-Section Posts, 2.0 lb/ft
0310	630-C003		702	Linear Feet	Steel U-Section Posts, 3.0 lb/ft
0320	630-D008		120	Linear Feet	Structural Steel Beams, W6 x 9

Line No.	Item Code	Adj Code	Quantity	Units	Description [Fixed Unit Price]
0330	630-E001		118	Pounds	Structural Steel Angles & Bars, 3 1/2" x 3 1/2" x 1/4" Angles
0340	630-E004		443	Pounds	Structural Steel Angles & Bars, 7/16" x 2 1/2" Flat Bar
0350	630-K001		96	Linear Feet	Welded & Seamless Steel Pipe Posts, 3 1/2"
0360	630-K002		109	Linear Feet	Welded & Seamless Steel Pipe Posts, 3"
0370	630-K003		390	Linear Feet	Welded & Seamless Steel Pipe Posts, 4"
0371	638-A001		23	Each	Flasher Assembly ICWS
0401	638-C001		4	Each	Flasher Assembly - Solar Powered
0410	660-A003		3	Each	Equipment Cabinet, Type B
0420	907-619-B001		330	Linear Feet	Temporary Portable Rumble Strips
0430	907-630-O001		10	Each	Remove and Reset Sign Assembly
0440	907-632-A001		1	Each	Solid State Traffic Cabinet Assembly, Type I Cabinet, Type 1 Controller
0450	907-632-J001		4	Each	Power Service Pedestal
0460	907-634-F002		2	Each	Detector Pole with Foundation, 35' Pole
0470	907-634-F004		11	Each	Detector Pole with Foundation, 25' Pole
0471	907-634-I001		4	Each	Wood Pole, Class II Height 40'
0480	907-636-B014		7,670	Linear Feet	Electric Cable, Underground in Conduit, IMSA 20-1, AWG 14, 5 Conductor
0490	907-636-B028		450	Linear Feet	Electric Cable, Underground in Conduit, IMSA 20-1, AWG 8, 3 Conductor
0500	907-637-A002		40	Each	Pullbox Enclosure, Type 2
0510	907-637-A003		4	Each	Pullbox Enclosure, Type 3
0520	907-637-C028		6,460	Linear Feet	Traffic Signal Conduit, Underground, Type 4, 2"
0530	907-637-D002		1,626	Linear Feet	Traffic Signal Conduit, Underground Drilled or Jacked, Rolled Pipe, 2"
0531	907-637-F005		500	Linear Feet	Traffic Signal Conduit, Aerial Supported, Type 1, 2"
0540	907-641-A002		9	Each	Signal Stop Bar Radar Vehicle Detection Sensor, Type 2
0550	907-641-B002		6	Each	Signal Advanced Radar Vehicle Detection Sensor, Type 2
0560	907-641-D001		6,235	Linear Feet	Radar Vehicle Detection Cable
			ALTERNATE GROUP AA NUMBER 1		
0570	907-624-B002		889	Linear Feet	6" Inverted Profile Thermoplastic Traffic Stripe, Continuous White
0580	907-624-D002		1,634	Linear Feet	6" Inverted Profile Thermoplastic Traffic Stripe, Continuous Yellow
0590	907-624-E001		50	Linear Feet	Inverted Profile Thermoplastic Detail Traffic Stripe, White
0600	907-624-E003		533	Linear Feet	Inverted Profile Thermoplastic Detail Traffic Stripe, Yellow
			ALTERNATE GROUP AA NUMBER 2		
0610	628-H001		889	Linear Feet	6" High Performance Cold Plastic Traffic Stripe, Continuous White
0620	628-J001		1,634	Linear Feet	6" High Performance Cold Plastic Traffic Stripe, Continuous Yellow
0630	628-K001		50	Linear Feet	High Performance Cold Plastic Detail Stripe, White

Line No.	Item Code	Adj Code	Quantity	Units	Description [Fixed Unit Price]
0640	628-K002		533	Linear Feet	High Performance Cold Plastic Detail Stripe, Yellow

FORM CSD-612
Rev. 1 / 2015

YEAR 2018 PROGRESS SCHEDULE YEAR 2019

PROJECT NUMBER HSIP-9999-01(254) / 107530301
COUNTY Districtwide

WORK PHASE NO.	WORK PHASE DESCRIPTION	LINE NUMBERS	JAN	FEB	MAR	APRIL	MAY	JUNE	JULY	AUGUST	SEPTEMBER	OCTOBER	NOV	DEC	JAN	FEB	MAR	APRIL	MAY	JUNE	JULY	AUGUST	SEPTEMBER	OCTOBER	NOV	DEC	
1	Miscellaneous	**10-140, 371-560**									0									110							
2	**Signing**	**280-370**									5			39		57			90								
3	**Pavement Markings**	**150-270, 570-640**																	85	110							
	LET:	**July 24, 2018**																									
	NOA:	**August 14, 2018**																									
	NTP/BCT:	**September 13, 2018**																									
	W.D.:	**110**																									
MONTH			JAN	FEB	MAR	APRIL	MAY	JUNE	JULY	AUGUST	SEPTEMBER	OCTOBER	NOV	DEC	JAN	FEB	MAR	APRIL	MAY	JUNE	JULY	AUGUST	SEPTEMBER	OCTOBER	NOV	DEC	172 WORKING DAYS PER YEAR
ANTICIPATED WORKING DAYS PER MONTH			6	7	11	15	19	20	21	21	20	16	11	5	6	7	11	15	19	20	21	21	20	16	11	5	

NOTE: THE ANTICIPATED WORKING DAYS SHOWN ON THIS SCHEDULE ARE FOR INFORMATIONAL PURPOSES ONLY.
THE ACTUAL WORKING DAY TOTAL AS ASSESSED BY THE PROJECT ENGINEER ON FORM CSD-765 SHALL GOVERN.