SECTION 905 -- PROPOSAL (CONTINUED)

I (We) hereby certify by digital signature and electronic submission via Bid Express of the Section 905 proposal below, that all certifications, disclosures and affidavits incorporated herein are deemed to be duly executed in the aggregate, fully enforceable and binding upon delivery of the bid proposal. I (We) further acknowledge that this certification shall not extend to the bid bond or alternate security which must be separately executed for the benefit of the Commission. This signature does not cure deficiencies in any required certifications, disclosures and/or affidavits. I (We) also acknowledge the right of the Commission to require full and final execution on any certification, disclosure or affidavit contained in the proposal at the Commission's election upon award. Failure to so execute at the Commission's request within the time allowed in the Standard Specifications for execution of all contract documents will result in forfeiture of the bid bond or alternate security.

Bidder acknowledges receipt of and has added to and made a part of the proposal and contract documents the following addendum (addenda):

ADDENDUM NO.	1	DATED	9/18/2018	ADDENDUM NO.		DATED	
ADDENDUM NO		DATED		ADDENDUM NO.		DATED	
ADDENDUM NO		DATED		ADDENDUM NO.		DATED	

Number	Description
1	Revised or Added Plan Sheet Nos. 2-3, 76-81, 8001, 8004, 8016, 8025, 8028, 8039, 8048, 8050, 8059, 8065, 8067, 8076, 8085, 8087, 8100, & 8110; Amendment EBS Download Required.

TOTAL ADDENDA: 1
(Must agree with total addenda issued prior to opening of bids)

Respectfully Submitted,

DATE _____

_____
Contractor

BY _____
Signature

TITLE _____

ADDRESS _____

CITY, STATE, ZIP _____

PHONE _____

FAX _____

E-MAIL _____

(To be filled in if a corporation)

Our corporation is chartered under the Laws of the State of _____ and the names, titles and business addresses of the executives are as follows:

_____
President Address

_____
Secretary Address

_____
Treasurer Address

The following is my (our) itemized proposal.

BR-0914-00(008)/ 100299302000

Marshall County(ies)

Revised 01/26/2016

For Informational Purposes Only

FMS CON:100299 /302000

ADDENDUM

STATE	PROJECT NO.
MISS.	BR-0914-00(008)

ROADWAY

TITLE SHEET (1)	TITLE	1

DETAILED INDEX & GENERAL NOTES (4)

DETAILED INDEX (ROADWAY)	DI-1	2
DETAILED INDEX (ROADWAY)	DI-2	3
GENERAL NOTES	GN-1	4
GENERAL NOTES	GN-2	5

TYPICAL SECTION SHEETS (4)

TYPICAL SECTION - NEW CONSTRUCTION, WIDENING, & OVERLAY	TS-1	6
TYPICAL SECTION - TRENCH WIDENING & DETOUR ROAD	TS-2	7
TYPICAL SECTION - LOCAL ROAD & BRIDGE CONSTRUCTION	TS-3	8
TYPICAL SECTION - CONSTRUCTION & REMOVAL OF REALIGNMENT & DETOUR	TS-4	9

QUANTITY SHEETS (14)

SUMMARY OF QUANTITIES	SQ-1	10
SUMMARY OF QUANTITIES	SQ-2	11
SUMMARY OF QUANTITIES	SQ-3	12
ESTIMATED QUANTITIES - REMOVAL	EQ-1	13
ESTIMATED QUANTITIES - EARTHWORKS	EQ-2	14
ESTIMATED QUANTITIES - EROSION CONTROL	EQ-3	15
ESTIMATED QUANTITIES - BRIDGE END PAVEMENT, GUARDRAIL	EQ-4	16
ESTIMATED QUANTITIES - BOX CULVERT & DRAINAGE SUMMARY	EQ-5	17
ESTIMATED QUANTITIES - DRIVEWAYS & SIDE DRAINS	EQ-6	18
ESTIMATED QUANTITIES - TRAFFIC CONTROL	EQ-7	19
ESTIMATED QUANTITIES - PAVEMENT MARKINGS	EQ-8	20
ESTIMATED QUANTITIES - SIGNS & DELINEATORS	EQ-9	21
ESTIMATED QUANTITIES - SIGN ASSEMBLIES	EQ-10	22
ESTIMATED QUANTITIES - TRAFFIC CONTROL SIGNS	EQ-11	23

PLAN AND PROFILE SHEETS (7)

SR 309 SITE 1 - B.O.P. TO STA. 839+00	3	24
BRUMLEY RD. SITE 1 - STA. 0+00 TO STA. 4+27	3A	25
SR 309 SITE 1 - STA. 839+00 TO STA. 860+98	4	26
SR 309 SITE 2 - STA. 48+00 TO STA. 62+00	5	27
SR 309 SITE 2 DETOUR - STA. 10+00 TO STA. 23+00	5A	28
SR 309 SITE 3 - STA. 82+00 TO STA. 111+00	6	29
SR 309 SITE 3 - STA. 111+00 TO E.O.P.	7	30

EROSION CONTROL PLAN SHEETS (7)

EROSION CONTROL PLAN - SR 309 SITE 1 - B.O.P. TO STA. 839+00	ECP-3	31
EROSION CONTROL PLAN - BRUMLEY RD. SITE 1 - STA. 0+00 TO STA. 4+27	ECP-3A	32
EROSION CONTROL PLAN - SR 309 SITE 1 - STA. 839+00 TO STA. 860+98	ECP-4	33
EROSION CONTROL PLAN - SR 309 SITE 2 - STA. 48+00 TO STA. 62+00	ECP-5	34
EROSION CONTROL PLAN - SR 309 SITE 2 DETOUR - STA. 10+00 TO STA. 23+00	ECP-5A	35
EROSION CONTROL PLAN - SR 309 SITE 3 - STA. 82+00 TO STA. 111+00	ECP-6	36
EROSION CONTROL PLAN - SR 309 SITE 3 - STA. 111+00 TO STA. E.O.P.	ECP-7	37

CONSTRUCTION SIGNING SHEET (3)

CONSTRUCTION SIGNING LAYOUT	CS-1	38
CONSTRUCTION SIGNING LAYOUT	CS-2	39
CONSTRUCTION SIGNING LAYOUT	CS-3	40

TRAFFIC CONTROL SHEETS (17)

TRAFFIC CONTROL CONSTRUCTION PHASING NOTES	TC-GN1	41
TRAFFIC CONTROL GENERAL NOTES	TC-GN2	42
TRAFFIC CONTROL PLAN - PHASE 1 CONSTRUCTION - SR 309 SITE 1 - B.O.P. TO STA. 838+00	TC-1	43
TRAFFIC CONTROL PLAN - PHASE 1 CONSTRUCTION - SR 309 SITE 1 - STA. 838+00 TO STA. 860+00	TC-2	44
TRAFFIC CONTROL PLAN - PHASE 1 CONSTRUCTION - SR 309 SITE 2 - STA. 48+00 TO STA. 62+00	TC-3	45

TRAFFIC CONTROL SHEETS (CONTINUED)

TRAFFIC CONTROL PLAN - PHASE 1 CONSTRUCTION - SR 309 SITE 3 - STA. 82+00 TO STA. 111+00	TC-4	46
TRAFFIC CONTROL PLAN - PHASE 1 CONSTRUCTION - SR 309 SITE 3 - STA. 111+00 TO E.O.P	TC-5	47
TRAFFIC CONTROL PLAN - PHASE 2 CONSTRUCTION - SR 309 SITE 1 - B.O.P. TO STA. 835+00	TC-6	48
TRAFFIC CONTROL PLAN - PHASE 2 CONSTRUCTION - SR 309 SITE 1 - STA. 835+00 TO STA. 860+00	TC-7	49
TRAFFIC CONTROL PLAN - PHASE 2 CONSTRUCTION - SR 309 SITE 2 - STA. 48+00 TO STA. 62+00	TC-8	50
TRAFFIC CONTROL PLAN - PHASE 2 CONSTRUCTION - SR 309 SITE 3 - STA. 82+00 TO STA. 111+00	TC-9	51
TRAFFIC CONTROL PLAN - PHASE 2 CONSTRUCTION - SR 309 SITE 3 - STA. 111+00 TO E.O.P	TC-10	52
TRAFFIC CONTROL PLAN - PHASE 3 CONSTRUCTION - SR 309 SITE 1 - B.O.P. TO STA. 838+00	TC-11	53
TRAFFIC CONTROL PLAN - PHASE 3 CONSTRUCTION - SR 309 SITE 1 - STA. 838+00 TO STA. 860+00	TC-12	54
TRAFFIC CONTROL PLAN - PHASE 3 CONSTRUCTION - SR 309 SITE 2 - STA. 48+00 TO STA. 62+00	TC-13	55
TRAFFIC CONTROL PLAN - PHASE 3 CONSTRUCTION - SR 309 SITE 3 - STA. 82+00 TO STA. 111+00	TC-14	56
TRAFFIC CONTROL PLAN - PHASE 3 CONSTRUCTION - SR 309 SITE 3 - STA. 111+00 TO E.O.P	TC-15	57

DETAIL OF INTERSECTION SHEETS (1)

DETAIL OF INTERSECTION - S.R. 309 AT BRUMLEY RD.	ID-1	58

PERMANENT PAVEMENT MARKING SHEETS (9)

PAVEMENT MARKINGS - SR 309 SITE 1 - B.O.P. TO STA. 822+00	PMD-1	59
PAVEMENT MARKINGS - SR 309 SITE 1 - STA. 822+00 TO STA. 838+00	PMD-2	60
PAVEMENT MARKINGS - SR 309 SITE 1 - STA. 838+00 TO STA. 851+00	PMD-3	61
PAVEMENT MARKINGS - SR 309 SITE 1 - STA. 851+00 TO STA. 861+00	PMD-4	62
PAVEMENT MARKINGS - SR 309 SITE 2 - STA. 48+00 TO STA. 62+00	PMD-5	63
PAVEMENT MARKINGS - SR 309 SITE 3 - STA. 82+00 TO STA. 97+00	PMD-6	64
PAVEMENT MARKINGS - SR 309 SITE 3 - STA. 97+00 TO STA. 111+00	PMD-7	65
PAVEMENT MARKINGS - SR 309 SITE 3 - STA. 111+00 TO STA. 124+00	PMD-8	66
PAVEMENT MARKINGS - SR 309 SITE 3 - STA. 124+00 TO STA. 135+00	PMD-9	67

MISCELLANEOUS ROADWAY ITEMS (10)

CULVERT HYDRAULIC DESIGN SUMMARY	CHD-1	68
VEGETATION SCHEDULE	VS-1	69
RIGHT-OF-WAY COORDINATE SHEET	RC-1	70
EROSION CONTROL	EC-1	71
SUPERELEVATION CASE I - ROTATION ABOUT CENTERLINE (2% NORMAL SUBGRADE)	SDSE-2A	72
SUPERELEVATION RUNOFF CASE I - ROTATION ABOUT CENTERLINE	SDRO-1	73
MISCELLANEOUS TYPICAL SECTION DETAILS	MTSD	74
BRIDGE END PAVEMENT (WITH RAIL, OVERLAY, AND SLEEPER SLAB)	BEPR-SS	75
2 GUARDRAIL: TYPICAL INSTALLATION AT BRIDGE APPROACHES FOR 2-LANE, 2-WAY HIGHWAY	SDGR-4A	76
2 PIPE CULVERT INSTALLATION	SDPI-1	77

RIPARIAN BUFFER SHEETS (4)

2 1 RIPARIAN BUFFER - SR 309 - SITE 1 - BRIDGES A AND B	ECP-RB-3	78
2 1 RIPARIAN BUFFER - SR 309 - SITE 1 - BRIDGE C	ECP-RB-4	79
2 1 RIPARIAN BUFFER - SR 309 - SITE 3 - BRIDGE D	ECP-RB-6	80
2 1 RIPARIAN BUFFER - SR 309 - SITE 3 - BRIDGE E	ECP-RB-7	81

PERMANENT SIGNING SHEETS (4)

PAVEMENT MARKINGS - SR 309 SITE 1 - B.O.P. TO STA. 835+00	PSP-1	1001
PAVEMENT MARKINGS - SR 309 SITE 1 - STA. 835+00 TO STA. 860+98	PSP-2	1002
PAVEMENT MARKINGS - SR 309 SITE 3 - STA. 82+00 TO STA. 111+00	PSP-3	1003
PAVEMENT MARKINGS - SR 309 SITE 3 - STA. 111+00 TO E.O.P	PSP-4	1004

MATTHEW R. WILLIAMS
LICENSED PROFESSIONAL ENGINEER
19816
STATE OF MISSISSIPPI
DATE: 9/14/2018

PS & E PLANS-DATE 1/8/2018		
FMS CON. # 100299/302000		
REVISIONS		
DATE	SHEET NO.	BY
8/21/18	2,3,4,11,17,24,25,	MRW
	31,32,76,77,78,79	
9/14/18	2,3,76,77,78,79,	WSJ
	80,81	

DATE	REVISION	BY
09/04/18	ADDED SHEETS	WSJ
09/14/18	ADDED SHEET	MRW

MISSISSIPPI DEPARTMENT OF TRANSPORTATION

DETAILED INDEX

PROJ. NO. BR-0914-00(008)

MARSHALL COUNTY

FILENAME: DI.DGN

DESIGN TEAM _____ CHECKED _____ DATE _____

WORKING NUMBER DI-1

SHEET NUMBER 2

PLAN
MISSISSIPPI DEPARTMENT OF TRANSPORTATION
ROADWAY PLAN DIVISION

9/13/2018 14:16:58 DI.DGN

FMS CON:100299 /302000

ADDENDUM

STATE	PROJECT NO.
MISS.	BR-0914-00(008)

STANDARD DRAWINGS - ROADWAY SHEETS (71)

BRIDGE END PAVEMENT RAIL (33.5" RAIL HEIGHT)	BER-1	6009
PAVEMENT MARKING DETAILS FOR 2-LANE & 4-LANE DIVIDED HIGHWAYS	PM-1	6051
2-WAY RAISED PAVEMENT MARKERS AT INTERSECTING ROADS (2-LANE)	PM-11	6061
RUMBLE STRIPES - 2-LANE HIGHWAYS (ASPHALT LANES, 2-FT ASPHALT SHLD)	RS-1	6064
TYPICAL TEMPORARY EROSION / SEDIMENT CONTROL APPLICATIONS	ECD-1	6101
DETAILS OF SEDIMENT BARRIER APPLICATIONS	ECD-2	6102
DETAILS OF SILT FENCE INSTALLATION	ECD-3	6103
DITCH CHECK STRUCTURES, TYPICAL APPLICATIONS AND DETAILS	ECD-4	6104
TEMPORARY EROSION, SEDIMENT AND WATER POLLUTION CONTROL MEASURES, SILT FENCE AND HAY BALE DITCH CHECKS	ECD-5	6105
DETAILS OF EROSION CONTROL WATTLE DITCH CHECK	ECD-6	6106
DETAILS OF EROSION CONTROL SILT DIKE DITCH CHECK	ECD-7	6107
ROCK DITCH CHECK	ECD-8	6108
ROCK DITCH CHECK WITH SUMP EXCAVATION	ECD-9	6109
ROCK DITCH CHECK WITH SUMP EXCAVATION AND ROCK FILTER DAM	ECD-10	6110
INLET PROTECTION TYPICAL APPLICATIONS AND DETAILS	ECD-11	6111
INLET PROTECTION DETAILS FOR COARSE AGGREGATE ON GRADES & SAGS	ECD-12	6112
INLET PROTECTION DETAILS OF WATTLES	ECD-13	6113
INLET PROTECTION DETAILS OF MANUFACTURED INLET PROTECTION DEVICE	ECD-14	6114
INLET PROTECTION DETAILS OF SAND BAG	ECD-15	6115
STABILIZED CONSTRUCTION ENTRANCE	ECD-16	6116
TEMPORARY CULVERT STREAM CROSSING	ECD-17	6117
TEMPORARY STREAM DIVERSION	ECD-18	6118
TEMPORARY STREAM DIVERSION (BOX EXTENSIONS)	ECD-19	6119
FLOATING TURBIDITY CURTAIN	ECD-20	6120
DETAILS OF EROSION CONTROL SANDBAG DITCH CHECK	ECD-21	6121
SEDIMENT RETENTION BARRIER	ECD-22	6122
DETAILS OF TYPICAL DITCH TREATMENTS	DT-1	6123
DITCH TREATMENT INSTALLATION DETAIL FOR SOIL REINFORCING	DT-1A	6124
TYPICAL TEMPORARY EROSION CONTROL MEASURES (SLOPE DRAIN AND TYPE A SILT BASIN)	BAS-A	6125
TYPICAL TEMPORARY EROSION CONTROL MEASURES (TYPE B SILT BASIN)	BAS-B	6126
TYPICAL TEMPORARY EROSION CONTROL MEASURES (TYPE D SILT BASIN) (135 CU. YARDS CAPACITY PER ACRE OF DRAINAGE)	BAS-D	6129
SUPER SILT FENCE	SSF-1	6130
EROSION CONTROL BLANKET	ECB-1	6131
GUARDRAIL: "W" BEAM (WOOD POSTS)	GR-1	6201
GUARDRAIL: THRIE BEAM (WOOD POSTS)	GR-1A	6202
GUARDRAIL: "W" BEAM (STEEL POSTS)	GR-1B	6203
GUARDRAIL: BRIDGE END SECTION TYPE "I" (WOOD POSTS) (NEW CONSTRUCTION)	GR-2F	6210
GUARDRAIL: BRIDGE END SECTION TYPE "I" (STEEL POSTS) (NEW CONSTRUCTION)	GR-2G	6211
GUARDRAIL: RUB RAIL HARDWARE SHEET	GR-RR	6218
GUARDRAIL: MISCELLANEOUS HARDWARE	GR-HW	6221
STANDARD ROADSIDE SIGNS	SN-3	6303
STANDARD ROADSIDE SIGNS	SN-3A	6304
STANDARD ROADSIDE SIGNS	SN-3B	6305
STANDARD ROADSIDE SIGN ASSEMBLY AND INSTALLATION	SN-4	6306
STANDARD ROADSIDE SIGN ASSEMBLY AND INSTALLATION	SN-4A	6307
STANDARD ROADSIDE SIGN ASSEMBLY AND INSTALLATION	SN-4B	6308
BREAKAWAY SIGN SUPPORTS	SN-6	6310
BREAKAWAY SIGN SUPPORTS	SN-6A	6311
BREAKAWAY SIGN SUPPORTS	SN-6B	6312
TYPICAL INSTALLATION AND DETAILS OF DELINEATORS AND DISTANCE REFERENCE SIGNS	SN-8	6314
TYPICAL GUARDRAIL DELINEATION	SN-8C	6317
SIGNING DETAILS FOR TWO LANE & FOUR LANE BRIDGE APPROACHES	SN-9	6318
TRAFFIC CONTROL PLAN FOR POSTED SPEED LIMIT LESS THAN 65 MPH (4-LANE: MEDIAN OR OUTSIDE LANE CLOSURE)	TCP-3	6353
SHORT DURATION CLOSING OF TWO-LANE TWO-WAY HIGHWAYS	TCP-6	6356
HIGHWAY SIGN AND BARRICADE DETAILS FOR CONSTRUCTION PROJECTS	TCP-8	6358
TRAFFIC CONTROL PLAN - MOBILE OPERATIONS - MULTILANE ROADS AND TWO-LANE ROADS	TCP-9	6359
TRAFFIC CONTROL PLANS - UNEVEN PAVEMENT DETAILS	TCP-12	6362
TEMPORARY STRIPING FOR TRAFFIC CONTROL - 2-LANE AND 4-LANE DIVIDED HIGHWAYS	TCP-13	6363
LOCATION OF R16-3 SIGNS	TCP-15	6365
TRAFFIC CONTROL DETAILS - DRUM PLACEMENT AND SHOULDER CLOSURE	TCP-16	6366
RIGHT-OF-WAY MARKER	RW-1	6401
RURAL DRIVEWAYS	RD-1	6403
TYPICAL GRADING TRANSITION BETWEEN CUTS AND FILLS	GT-1	6404
SIGHT FLARE	SF-1	6405
GUIDE BANK (SPUR DIKE): EARTH	ED-1	6406

STANDARD DRAWINGS - ROADWAY SHEETS (CONTINUED)

MISCELLANEOUS DETAIL SHEET 1. STACKED PIPE JOINTS 2. EXCAVATION AT GRADE POINTS	MDS-1	6425
DETAILS OF PAVED FLUMES	PF-1	6426
FLEXIBLE PIPE STANDARD	PI-2	6502
FLARED END SECTION FOR CONCRETE PIPE	FE-1	6530
FLARED END SECTION FOR CONCRETE ARCH PIPE	FE-1A	6531
FLARED END SECTION FOR METAL PIPE & ARCH PIPE	FE-1B	6532

STANDARD DRAWINGS - BRIDGE (BOX CULVERT) SHEETS (17)

BASIC CULVERT DRAWING - BARREL JOINT LOCATIONS - NORMAL AND SKEWED CULVERTS - GROUP I DIAGRAMS	IBJL-1	7005
COLLAR DETAILS FOR BOX STRUCTURES	ICJ-1	7008
SKEWED COLLAR DETAILS FOR BOX STRUCTURES	ICJS-1	7009
BARREL DETAILS - SINGLE CELL - HEIGHT 6 FT. - SPANS 6-20 FT.	IBS-6	7011
BARREL DETAILS - SINGLE CELL - HEIGHT 6 FT. - SPANS 6-20 FT.	IBS-6	7012
BARREL DETAILS - SINGLE CELL - HEIGHT 6 FT. - SPANS 6-20 FT.	IBS-6	7013
BARREL DETAILS - SINGLE CELL - HEIGHT 8 FT. - SPANS 8-20 FT.	IBS-8	7014
BARREL DETAILS - SINGLE CELL - HEIGHT 8 FT. - SPANS 8-20 FT.	IBS-8	7015
BARREL DETAILS - SINGLE CELL - HEIGHT 8 FT. - SPANS 8-20 FT.	IBS-8	7016
WINGS WITH 3:1 SLOPE FOR BASIC CULVERT DRAWING - SINGLE CELL - 0° SKEW DETAILS - HEIGHTS 6-12 FT. - SPANS 6-24 FT.	IWS-3W	7032
WINGS WITH 3:1 SLOPE FOR BASIC CULVERT DRAWING - SINGLE CELL - 0° SKEW DETAILS - HEIGHT 8 FT. - SPANS 8-20 FT.	IWS-8-3W	7035
WINGS WITH 3:1 SLOPE FOR BASIC CULVERT DRAWING - SINGLE CELL - 0° SKEW DETAILS - HEIGHTS 8 FT. - SPANS 8-20 FT.	IWS-8-3W	7036
WINGS WITH 3:1 SLOPE FOR BASIC CULVERT DRAWING - SINGLE CELL - 45° SKEW DETAILS - HEIGHTS 6-12 FT. - SPANS 6-24 FT.	IWS-3W-45	7100
WINGS WITH 3:1 SLOPE FOR BASIC CULVERT DRAWING - SINGLE CELL - 45° SKEW DETAILS - HEIGHTS 6-12 FT. - SPANS 6-24 FT.	IWS-3W-45	7101
WINGS WITH 3:1 SLOPE FOR BASIC CULVERT DRAWING - SINGLE CELL - 45° SKEW DETAILS - HEIGHT 6 FT. - SPANS 6-20 FT.	IWS-6-3W-45	7102
WINGS WITH 3:1 SLOPE FOR BASIC CULVERT DRAWING - SINGLE CELL - 45° SKEW DETAILS - HEIGHT 6 FT. - SPANS 6-20 FT.	IWS-6-3W-45	7103
WINGS WITH 3:1 SLOPE FOR BASIC CULVERT DRAWING - SINGLE CELL - 45° SKEW DETAILS - HEIGHT 6 FT. - SPANS 6-20 FT.	IWS-6-3W-45	7104

BRIDGE SHEETS (122)

*** NOTE: SEE SHEET 8001 FOR BRIDGE INDEX *** 8001-8122

CROSS-SECTIONS (31)

SR 309 SITE 1	9001-9010
SR 309 SITE 2	9011-9014
SR 309 SITE 2 DETOUR	9015-9018
SR 309 SITE 3	9019-9029
BRUMLEY RD.	9030-9031

TOTAL SHEETS 326

MATTHEW R. WILLIAMS
LICENSED PROFESSIONAL ENGINEER
19816
STATE OF MISSISSIPPI
DATE: 9/14/2018

DATE	REVISION	BY
09/14/18	DELETED SHEETS	MRW
08/27/18	UPDATED SHEET TOTAL	MRW

MISSISSIPPI DEPARTMENT OF TRANSPORTATION
DETAILED INDEX

PROJ. NO. BR-0914-00(008)
MARSHALL COUNTY
FILENAME: DI.DGN
DESIGN TEAM _____ CHECKED _____ DATE _____

WORKING NUMBER DI-2
SHEET NUMBER 3

PLAN
MISSISSIPPI DEPARTMENT OF TRANSPORTATION
ROADWAY DIVISION

9/13/2018 14:16:59 DI.DGN

FMS CON: 100299/302000

ADDENDUM

STATE	PROJECT NO.
MISS.	BR-0914-00(008)

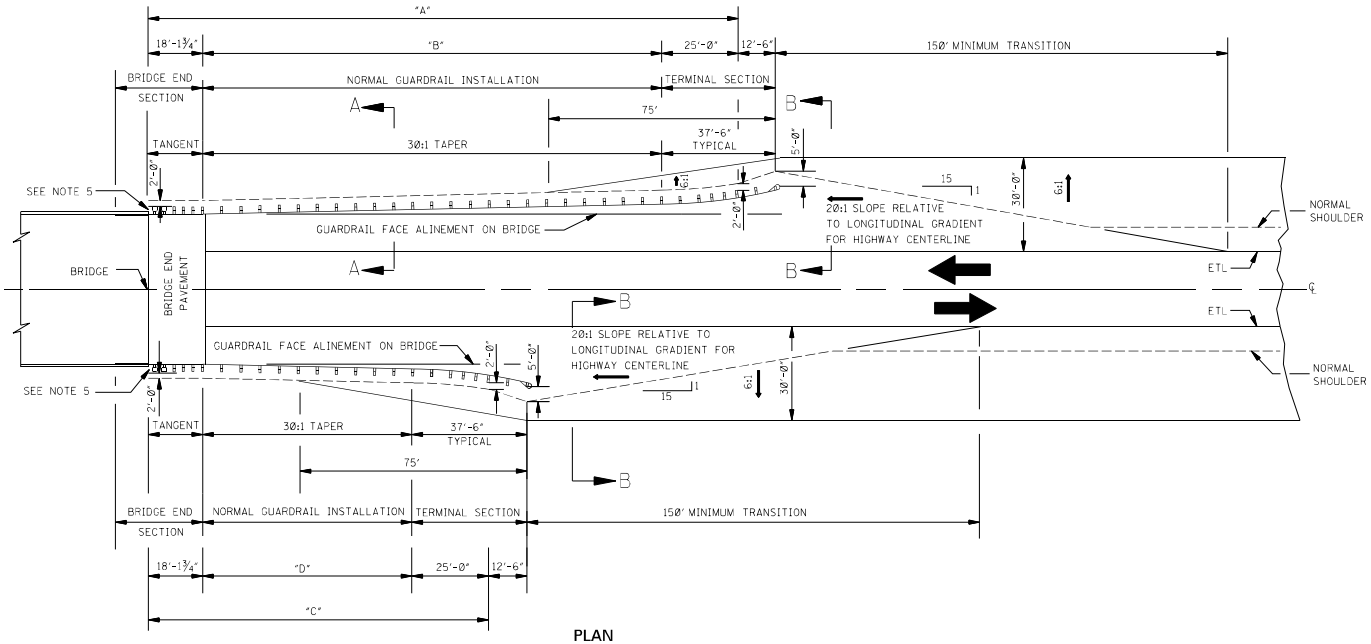

PLAN

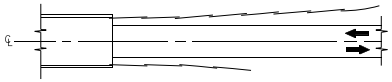

DETAIL OF GUARDRAIL SECTION LAPS

GENERAL NOTES:

1. VALUES FOR "A", "B", "C" AND "D" WILL BE SHOWN ELSEWHERE ON THE PLANS.
2. FOR DETAILS PERTINENT TO INSTALLATION OF THE TERMINAL SECTION, SEE MANUFACTURER'S SPECIFICATIONS AND DRAWINGS OR ELSEWHERE ON PLANS
3. GUARDRAIL SECTIONS ARE TO BE LAPPED IN THE DIRECTION OF TRAFFIC APPROACHING THE BRIDGE.
4. THE OVERALL LENGTH OF GUARDRAIL IS MEASURED FROM THE CONNECTING END ON THE BRIDGE.
5. THE SHOULDER WIDTH AT THE BRIDGE END SHALL BE SUFFICIENTLY WIDE TO PROVIDE A MINIMUM OF 2'-0" BEHIND THE BACK OF POST BEFORE THE SLOPE BREAK (HINGEPOINT).
6. TYPE, DETAILS AND LIMITS OF GUARDRAIL BRIDGE END SECTION WILL BE SHOWN ELSEWHERE ON THE PLANS.

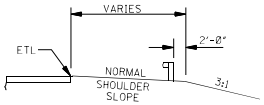

SECTION A–A

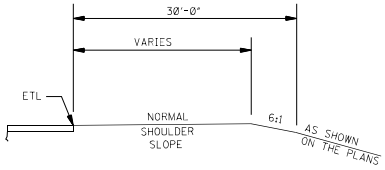

SECTION B–B

MISSISSIPPI DEPARTMENT OF TRANSPORTATION

GUARDRAIL: TYPICAL INSTALLATION AT BRIDGE APPROACHES FOR 2-LANE, 2-WAY HIGHWAY

PROJ. NO.: BR-0914-00(008)

COUNTY: MARSHALL

WORKING NUMBER: SDGR-4A

SHEET NUMBER: 76

FILENAME: SDGR-4A.DGN

DESIGN TEAM GS&P CHECKED DATE 1998 VER.

DATE	AUDITS	SHEET	SDGR-4A TO FLAGGER	REVISION	BY
06-24-03					

PLAN MISSISSIPPI DEPARTMENT OF TRANSPORTATION PROJECT DEVELOPMENT DIVISION

9/13/2018 14:16:59 SDG- SDGR-4A.DGN

FMS CON: 100299/302000

ADDENDUM

STATE	PROJECT NO.
MISS.	BR-0914-00(008)

CORRUGATED STEEL AND ALUMINUM PIPE (ROUND) H-20 LOADING

PIPE DIAMETER (in)	MINIMUM COVER FROM TOP OF PIPE TO TOP OF SUBGRADE (in)	MAXIMUM FILL HEIGHT ABOVE TOP OF PIPE (ft) — SHEET THICKNESS (in): 0.064 STEEL 0.060 ALUM. 16 GAGE	0.079 STEEL 0.075 ALUM. 14 GAGE	0.109 STEEL 0.105 ALUM. 12 GAGE	0.138 STEEL 0.135 ALUM. 10 GAGE	0.168 STEEL 0.164 ALUM. 8 GAGE
		2 2/3" X 1/2" CORRUGATED STEEL RIVETED, WELDED OR HELICAL		3" X 1" OR 5" X 1" CORRUGATED STEEL RIVETED, WELDED, HELICAL OR BOLTED		2 2/3" X 1/2" CORRUGATED ALUMINUM RIVETED OR HELICAL
12"	12"	84'/ - / 45'	91'/ - / 45'	- / - / 78'	- / - / 81'	- / - / 84'
15"	12"	67'/ - / -	73'/ - / -	- / - / -	- / - / -	- / - / -
18"	12"	56'/ - / 30'	61'/ - / 30'	- / - / 52'	- / - / 54'	- / - / 56'
24"	12"	42'/ - / 22'	46'/ - / 22'	59'/ - / 39'	- / - / 41'	- / - / 42'
30"	12"	34'/ - / 18'	36'/ - / 18'	47'/ - / 31'	- / - / 32'	- / - / 34'
36"	12"	28'/ 48'/ 15'	30'/ 60'/ 15'	39'/ 78'/ 26'	41'/ 89'/ 27'	- / 101'/ 28'
42"	12"	31'/ 41'/ -	43'/ 51'/ 26'	46'/ 64'/ 43'	48'/ 71'/ 43'	50'/ 79'/ 44'
48"	12"	27'/ 36'/ -	37'/ 45'/ -	45'/ 57'/ 40'	46'/ 61'/ 41'	47'/ 66'/ 43'
54"	12"	- / 32'/ -	33'/ 40'/ -	43'/ 52'/ 35'	44'/ 55'/ 37'	45'/ 59'/ 38'
60"	12"	- / 29'/ -	- / 36'/ -	43'/ 49'/ -	43'/ 51'/ 33'	44'/ 54'/ 34'
66"	12"	- / 26'/ -	- / 33'/ -	42'/ 47'/ -	43'/ 49'/ 30'	43'/ 51'/ 31'
72"	12"	- / 24'/ -	- / 30'/ -	- / 44'/ -	41'/ 47'/ -	43'/ 49'/ 29'
78"	12"	- / 22'/ -	- / 28'/ -	- / 41'/ -	- / 46'/ -	39'/ 47'/ -
84"	12"	- / 21'/ -	- / 26'/ -	- / 38'/ -	- / 45'/ -	35'/ 46'/ -
90"	12"	- / 19'/ -	- / 24'/ -	- / 35'/ -	- / 43'/ -	- / 45'/ -
96"	12"	- / 18'/ -	- / 22'/ -	- / 33'/ -	- / 40'/ -	- / 44'/ -
102"	24"	- / 17'/ -	- / 21'/ -	- / 31'/ -	- / 38'/ -	- / 42'/ -
108"	24"	- / - / -	- / 20'/ -	- / 30'/ -	- / 35'/ -	- / 39'/ -
114"	24"	- / - / -	- / 19'/ -	- / 28'/ -	- / 34'/ -	- / 37'/ -
120"	24"	- / - / -	- / - / -	- / 27'/ -	- / 32'/ -	- / 35'/ -

NOTE: THE AVERAGE INSIDE DIAMETER SHALL NOT VARY MORE THAN ONE (1) PERCENT OR 1/2", WHICHEVER IS GREATER, FROM THE NOMINAL DIAMETER WHEN MEASURED ON THE INSIDE CREST OF THE CORRUGATIONS (AASHTO M 36M/M 36 & AASHTO M 196M/M 196).

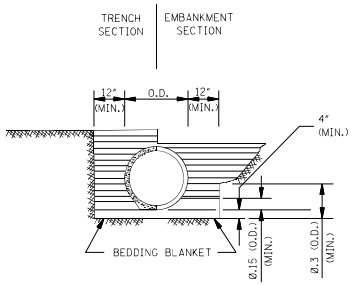

CLASS B

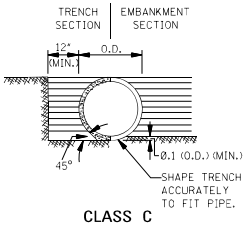

CLASS C

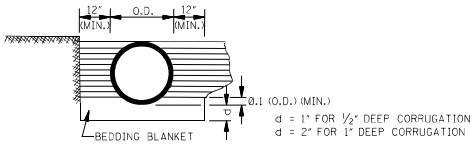

CLASS C MODIFIED

MAXIMUM HEIGHT OF FILL OVER REINFORCED CONCRETE PIPE

CLASS OF PIPE	TYPE OF BACKFILL	MAXIMUM COVER (ft): CLASS "C" BEDDING	CLASS "B" BEDDING
III	NORMAL	16'	-
IV	NORMAL	23'	28'
V	NORMAL	30'	36'
IV	IMPERFECT	-	90'
V	IMPERFECT	-	115'

NOTE: CLASS OF PIPE AND BEDDING TO BE CONSISTENT THROUGHOUT THE PIPE LENGTH.

MAXIMUM HEIGHT OF FILL OVER CLASS 2 NONREINFORCED CONCRETE PIPE, PERFORATED AND/OR PLAIN, FOR UNDERDRAINS

PIPE SIZE (in)	MAXIMUM COVER (ft) BEDDING CLASS "C"/CLASS "B": TRENCH B_d (in)	TRENCH SAND & GRAVEL	TRENCH DAMP CLAY	PROJECTING POSITIVE $p = 0.7$; $R_{sd} = 0.7$
4"	2.00'	*	*	34'/42'
6"	2.00'	*	*	25'/30'
8"	2.25'	*	16'/ *	19'/24'
10"	2.50'	*	12'/20'	16'/19'
12"	2.75'	*	12'/18'	14'/17'

NOTES:
* 1. INDICATES NO LIMIT OF FILL HEIGHT (130 lbs/ft^3).
2. TRENCH WIDTH (B_d) NO GREATER THAN 16" PLUS O.D.
3. FACTOR OF SAFETY IS 1.25 ON MINIMUM ULTIMATE STRENGTH.
4. MINIMUM COVER FOR HIGHWAY LOADS IS 18".
5. PERFORATED PIPE SHALL BE TYPE 1.

CORRUGATED METAL PIPE ARCHES H-20 LOADING

EQUIV. DIAMETER (in)	PIPE DIMENSION (SPAN X RISE) (in)	MINIMUM CORNER RADIUS (in)	MINIMUM COVER FROM TOP OF PIPE TO TOP OF SUBGRADE FOR 2 tons/ft^2 (in)	STEEL: MINIMUM THICKNESS REQUIRED (in)	STEEL: MAXIMUM FILL HEIGHT ABOVE TOP OF PIPE (ft) FOR THE FOLLOWING CORNER BEARING PRESSURE (tons/ft^2): 2 tons/ft^2	STEEL: † 3 tons/ft^2	ALUMINUM: MINIMUM THICKNESS REQUIRED (in)	ALUMINUM: MAXIMUM FILL HEIGHT ABOVE TOP OF PIPE (ft) FOR THE FOLLOWING CORNER BEARING PRESSURE (tons/ft^2): 2 tons/ft^2	ALUMINUM: † 3 tons/ft^2
				2 2/3" X 1/2" CORRUGATION RIVETED, WELDED OR HELICAL			2 2/3" X 1/2" CORRUGATION RIVETED OR HELICAL		
15"	17" X 13"	3"	18"	0.064"	13'	15'+	0.060"	15'	-
18"	21" X 15"	3"	18"	0.064"	12'	15'+	0.060"	14'	-
24"	28" X 20"	3"	18"	0.064"	10'	15'	0.060"	10'	15'+
30"	35" X 24"	3"	18"	0.079"	9'	14'	0.060"	9'	14'
36"	42" X 29"	3 1/2"	18"	0.079"	9'	13'	0.075"	9'	13'
42"	49" X 33"	4"	18"	0.079"	8'	12'	0.105"	8'	12'
48"	57" X 38"	5"	18"	0.109"	8'	12'	0.135"	8'	12'
54"	64" X 43"	6"	18"	0.109"	8'	12'	0.135"	8'	12'
60"	71" X 47"	7"	18"	0.138"	8'	12'	0.164"	8'	12'
66"	77" X 52"	8"	18"	0.168"	8'	12'			
72"	83" X 57"	9"	18"	0.168"	9'	13'			
			5" X 1" OR 3" X 1" CORRUGATION RIVETED, WELDED OR HELICAL						
36"	40" X 31"	5"	18"	0.079"	12'	15'+			
42"	46" X 36"	6"	18"	0.079"	12'	15'+			
48"	53" X 41"	7"	18"	0.079"	12'	15'+			
54"	60" X 46"	8"	18"	0.079"	12'	15'+			
60"	66" X 51"	9"	18"	0.079"	12'	15'+			
66"	73" X 55"	12"	18"	0.079"	15'+	-			
72"	81" X 59"	14"	18"	0.079"	15'	-			
78"	87" X 63"	14"	18"	0.079"	14'	15'+			
84"	95" X 67"	16"	18"	0.109"	13'	15'+			
90"	103" X 71"	16"	24"	0.109"	12'	15'+			
96"	112" X 75"	18"	24"	0.109"	11'	15'+			

NOTES:
1. THE AVERAGE INSIDE DIAMETER SHALL NOT VARY MORE THAN ONE (1) PERCENT OR 1/2", WHICHEVER IS GREATER, FROM THE NOMINAL DIAMETER WHEN MEASURED ON THE INSIDE CREST OF THE CORRUGATIONS. (AASHTO M 36M/M 36 & AASHTO M 196M/M 196).

† 2. BEARING PRESSURES EXCEEDING 2 tons/ft^2 REQUIRED FOR GIVEN FILL HEIGHT SHALL HAVE FOUNDATION MATERIALS INVESTIGATED TO DETERMINE BEARING CAPACITY.

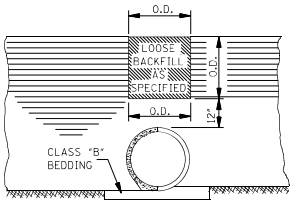

SECTION A–A

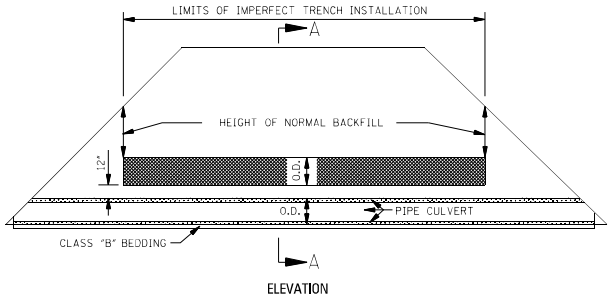

ELEVATION

IMPERFECT TRENCH INSTALLATION

GENERAL NOTES:

1. MINIMUM SPACING BETWEEN MULTIPLE LINES OF PARALLEL PIPE SHALL BE THE DISTANCE REQUIRED FOR INSTALLING THE ADJACENT FLARED END SECTIONS OR AS SHOWN ON THE HEADWALL DRAWINGS FOR CONDUITS REQUIRING HEADWALLS.

2. UNLESS OTHERWISE INDICATED, THE TOP OF THE PIPE SHALL BE BELOW THE TOP OF THE SUBGRADE, AND A MINIMUM OF 12" OF COVER OVER THE TOP OF THE PIPE SHALL BE MAINTAINED BETWEEN THE SHOULDER LINES.

3. WHERE PRE-BED PIPE IS INSTALLED, FLARED END SECTIONS FROM OTHER MANUFACTURERS MAY BE JOINED TO PRE-BED PIPE PROVIDED A CONCRETE COLLAR IS PLACED AT THE CONTRACTORS EXPENSE AND A DEFORMATION TO THE PIPE'S FLOWLINE IS NOT EVIDENT ON FINAL PLACEMENT.

DATE	REVISION	BY
06-24-03	ADDED SHEET 5(B)(C)-43 TO PLANSET	KSW

MISSISSIPPI DEPARTMENT OF TRANSPORTATION

PIPE CULVERT INSTALLATION

PROJ. NO.: BR-0914-00(008)
COUNTY: MARSHALL

FILENAME: SDPI-1.DGN
DESIGN TEAM GS&P CHECKED _____ DATE 1998 VER.

WORKING NUMBER
SDPI-1
SHEET NUMBER
77

PLAN PROJECT DEVELOPMENT DIVISION MISSISSIPPI DEPARTMENT OF TRANSPORTATION

9/13/2018 14:17:08 SDS-SDPI-1.DGN

FMS CON: 100299/302000

STATE	PROJECT NO.
MISS.	BR-0914-00(008)

ADDENDUM

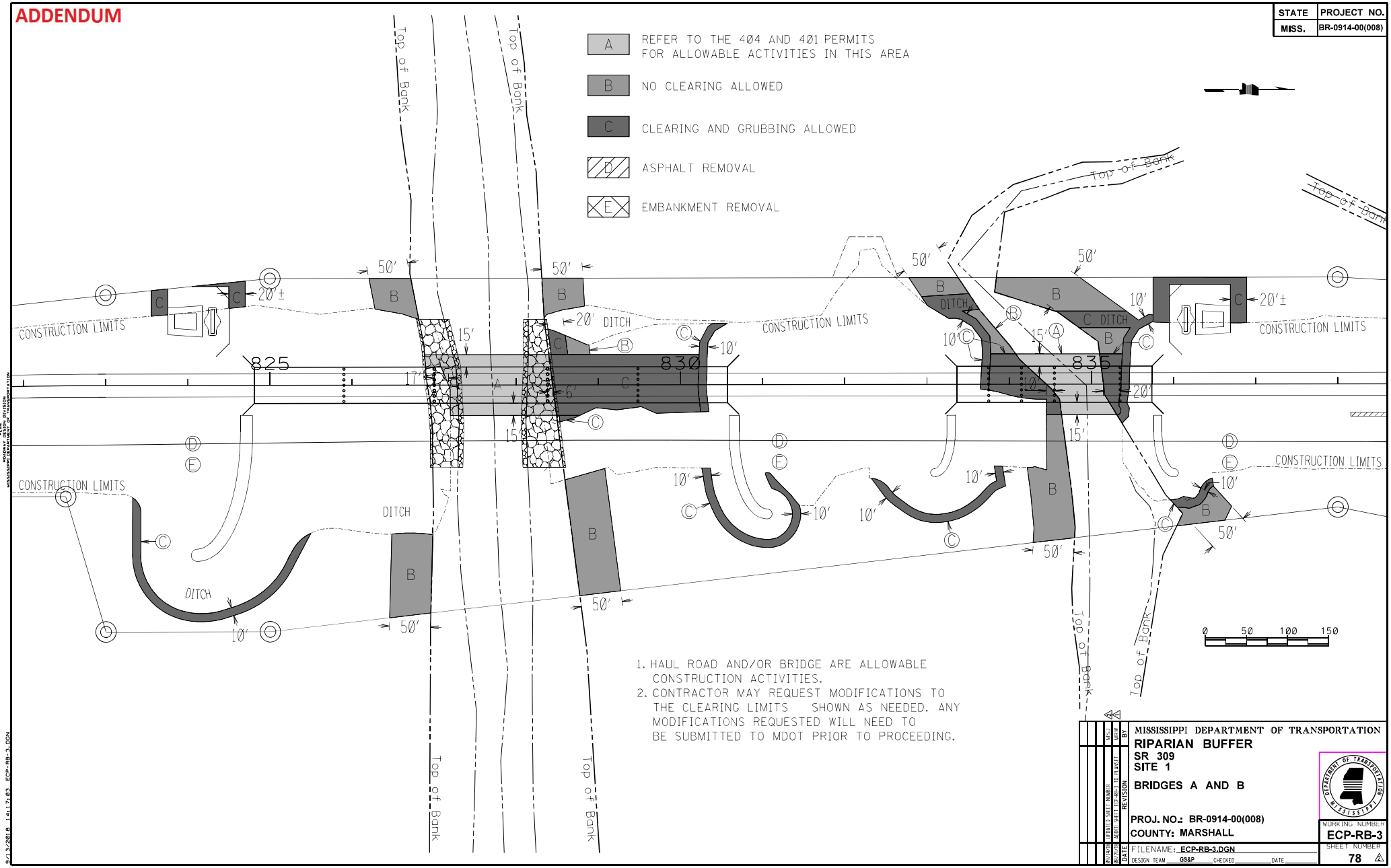

1. HAUL ROAD AND/OR BRIDGE ARE ALLOWABLE CONSTRUCTION ACTIVITIES.
2. CONTRACTOR MAY REQUEST MODIFICATIONS TO THE CLEARING LIMITS SHOWN AS NEEDED. ANY MODIFICATIONS REQUESTED WILL NEED TO BE SUBMITTED TO MDOT PRIOR TO PROCEEDING.

MISSISSIPPI DEPARTMENT OF TRANSPORTATION

RIPARIAN BUFFER
SR 309
SITE 1

BRIDGES A AND B

PROJ. NO.: BR-0914-00(008)
COUNTY: MARSHALL

DATE	REVISION	BY
09/04/03	UPDATED SHEET NUMBER	MJCJ
08/27/03	ADDED SHEET REFERENCE TO PLANSET	MAW

FILENAME: ECP-RB-3.DGN
DESIGN TEAM GS&P CHECKED DATE

WORKING NUMBER **ECP-RB-3**
SHEET NUMBER **78**

9/13/2018 14:17:03 ECP-RB-3.DGN

FMS CON: 100299/302000

STATE	PROJECT NO.
MISS.	BR-0914-00(008)

ADDENDUM

A — REFER TO THE 404 AND 401 PERMITS FOR ALLOWABLE ACTIVITIES IN THIS AREA

B — NO CLEARING ALLOWED

C — CLEARING AND GRUBBING ALLOWED

D — ASPHALT REMOVAL

E — EMBANKMENT REMOVAL

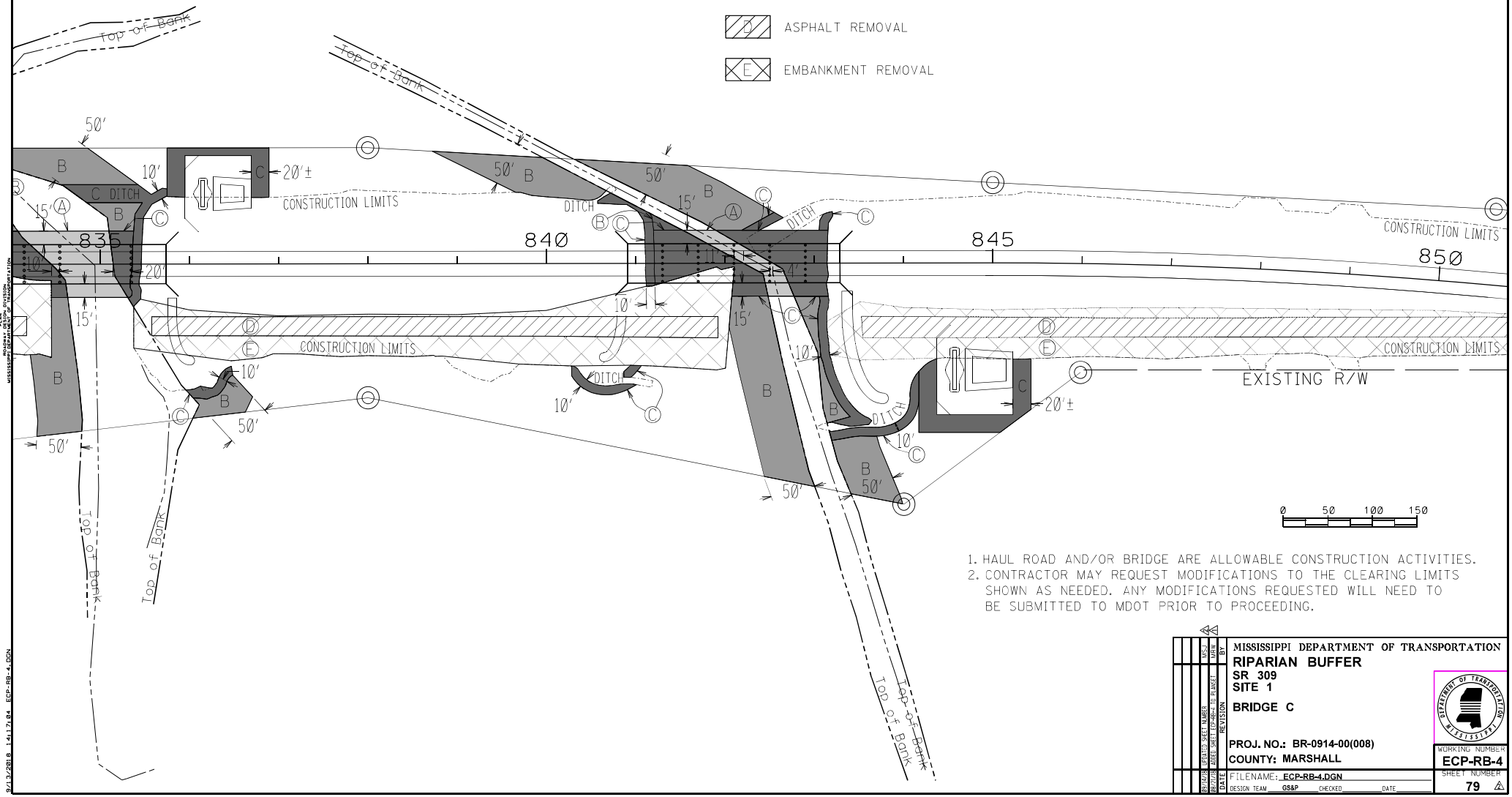

1. HAUL ROAD AND/OR BRIDGE ARE ALLOWABLE CONSTRUCTION ACTIVITIES.
2. CONTRACTOR MAY REQUEST MODIFICATIONS TO THE CLEARING LIMITS SHOWN AS NEEDED. ANY MODIFICATIONS REQUESTED WILL NEED TO BE SUBMITTED TO MDOT PRIOR TO PROCEEDING.

DATE	REVISION	BY
09/04/08	PRIMED SHEET NUMBER	MJSJ
09/04/08	ADDED SHEET REFERENCE TO PLANSET	MRW

MISSISSIPPI DEPARTMENT OF TRANSPORTATION

RIPARIAN BUFFER
SR 309
SITE 1

BRIDGE C

PROJ. NO.: BR-0914-00(008)
COUNTY: MARSHALL

WORKING NUMBER **ECP-RB-4**

FILENAME: ECP-RB-4.DGN

DESIGN TEAM GS&P CHECKED _____ DATE _____

SHEET NUMBER 79

PLAN REVIEW DIVISION MISSISSIPPI DEPARTMENT OF TRANSPORTATION

9/13/2018 14:17:84 ECP-RB-4.DGN

FMS CON: 100299/302000

STATE	PROJECT NO.
MISS.	BR-0914-00(008)

ADDENDUM

1. HAUL ROAD AND/OR BRIDGE ARE ALLOWABLE CONSTRUCTION ACTIVITIES.
2. CONTRACTOR MAY REQUEST MODIFICATIONS TO THE CLEARING LIMITS SHOWN AS NEEDED. ANY MODIFICATIONS REQUESTED WILL NEED TO BE SUBMITTED TO MDOT PRIOR TO PROCEEDING.

A — REFER TO THE 404 AND 401 PERMITS FOR ALLOWABLE ACTIVITIES IN THIS AREA

B — NO CLEARING ALLOWED

C — CLEARING AND GRUBBING ALLOWED

D — ASPHALT REMOVAL

E — EMBANKMENT REMOVAL

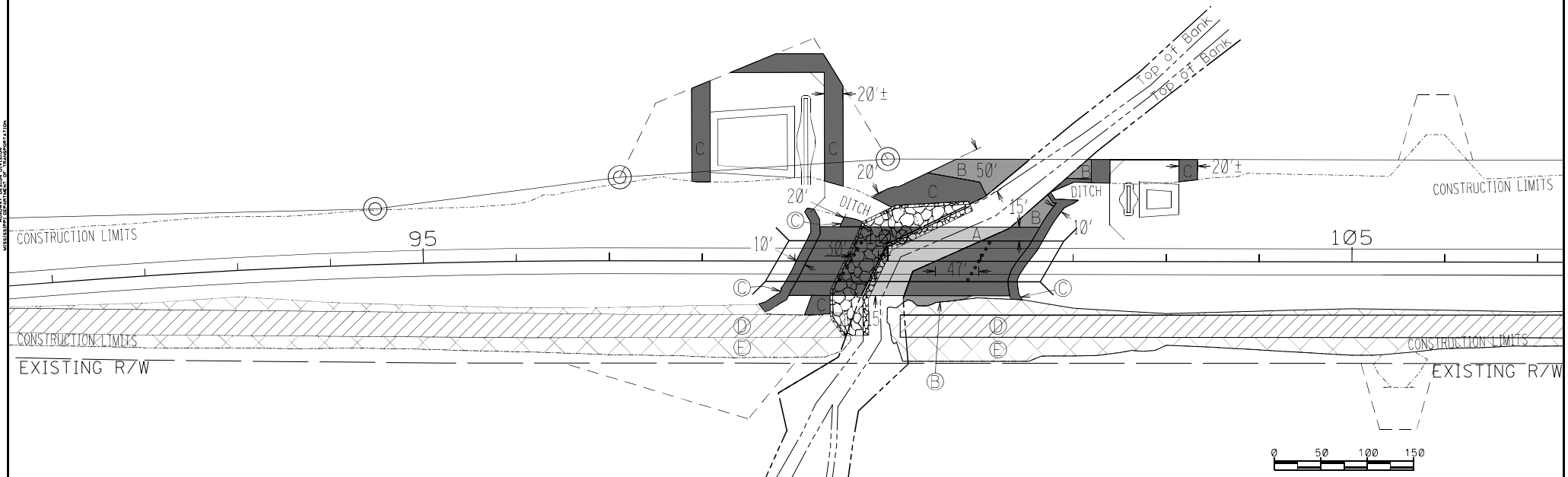

MISSISSIPPI DEPARTMENT OF TRANSPORTATION

RIPARIAN BUFFER
SR 309
SITE 3

BRIDGE D

PROJ. NO.: BR-0914-00(008)
COUNTY: MARSHALL

DATE	REVISION	BY
09/04/08	PLANS SHEET NUMBER	MJCJ
09/04/08	BRIDGE SHEET REDESIGN (1-PLANS)	MJCJ

FILENAME: ECP-RB-6.DGN
DESIGN TEAM GS&P CHECKED DATE

WORKING NUMBER: ECP-RB-6
SHEET NUMBER: 80

9/13/2018 14:17:06 ECP-RB-6.DGN

FMS CON: 100299/302000

STATE	PROJECT NO.
MISS.	BR-0914-00(008)

ADDENDUM

1. HAUL ROAD AND/OR BRIDGE ARE ALLOWABLE CONSTRUCTION ACTIVITIES.
2. CONTRACTOR MAY REQUEST MODIFICATIONS TO THE CLEARING LIMITS SHOWN AS NEEDED. ANY MODIFICATIONS REQUESTED WILL NEED TO BE SUBMITTED TO MDOT PRIOR TO PROCEEDING.

A — REFER TO THE 404 AND 401 PERMITS FOR ALLOWABLE ACTIVITIES IN THIS AREA

B — NO CLEARING ALLOWED

C — CLEARING AND GRUBBING ALLOWED

D — ASPHALT REMOVAL

E — EMBANKMENT REMOVAL

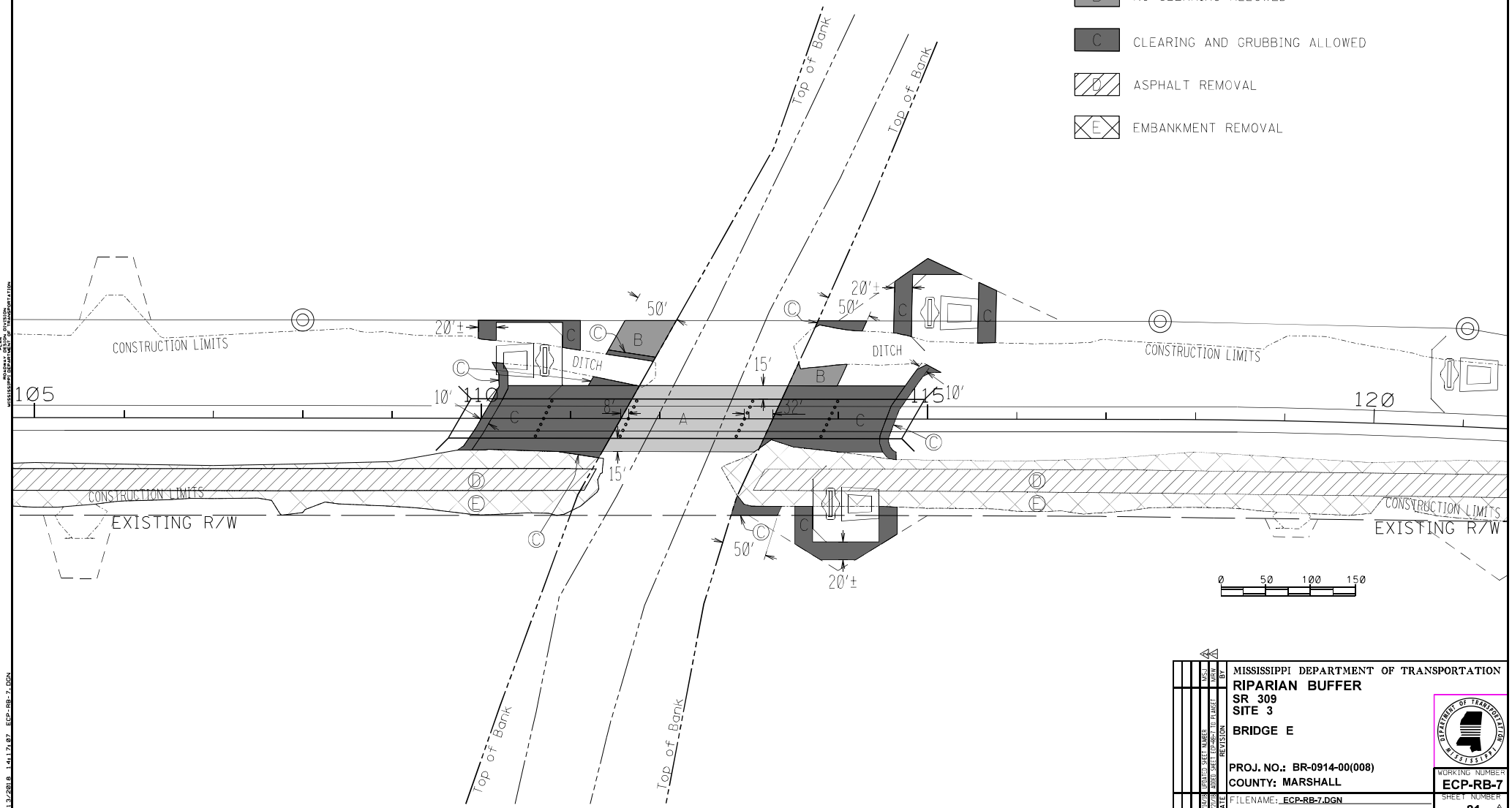

9/24/08	RIPARIAN SHEET REQUEST	MDOT	BY
8/27/08	RIPARIAN SHEET REVISION	MDOT	BY
DATE	REVISION		

MISSISSIPPI DEPARTMENT OF TRANSPORTATION

RIPARIAN BUFFER
SR 309
SITE 3

BRIDGE E

PROJ. NO.: BR-0914-00(008)
COUNTY: MARSHALL

WORKING NUMBER
ECP-RB-7

FILENAME: ECP-RB-7.DGN
DESIGN TEAM GS&P CHECKED DATE

SHEET NUMBER
81

PLAN
MISSISSIPPI DEPARTMENT OF TRANSPORTATION
PROJECT DIVISION

9/13/2018 14:17:07 ECP-RB-7.DGN

ADDENDUM

STATE	PROJECT NO.
MISS.	BR-0914-00(008)

DESCRIPTION OF SHEETS SPECIAL DESIGN SHEETS ~ BRIDGE DRAWINGS	WORKING NUMBER	SHEET NUMBER
DETAILED INDEX (BRIDGE)	DI-BR-1	8001
DETAILED INDEX (BRIDGE)	DI-BR-2	8002
SUMMARY OF QUANTITIES (BRIDGE)	SQ-BR-1	8003
BRIDGE A - S.R. 309 OVER PIGEON ROOST CREEK AT L.M. 8.4		
GENERAL NOTES & ESTIMATED QUANTITIES	A1 OF 24	8004
BRIDGE LAYOUT AND PROFILE SHEET	A2 OF 24	8005
FOUNDATION PLAN	A3 OF 24	8006
FOUNDATION PLAN	A4 OF 24	8007
END BENTS NO. 1 & 6 DETAILS	A5 OF 24	8008
END BENTS DETAILS	A6 OF 24	8009
INTERMEDIATE BENTS NO. 2 & 5 DETAILS	A7 OF 24	8010
INTERMEDIATE BENTS NO. 2 & 5 DETAILS	A8 OF 24	8011
INTERMEDIATE BENTS NO. 3 & 4 DETAILS	A9 OF 24	8012
INTERMEDIATE BENTS NO. 3 & 4 DETAILS	A10 OF 24	8013
PLAN OF 111'-0" SPANS (1 & 5)	A11 OF 24	8014
PLAN OF 110'-0" SPANS (2 & 4)	A12 OF 24	8015
SPAN DETAILS SPANS (1, 2, 4 & 5)	A13 OF 24	8016
SPAN DETAILS SPANS (1, 2, 4 & 5)	A14 OF 24	8017
PLAN OF 138'-0" SPAN (3)	A15 OF 24	8018
SPAN DETAILS SPAN (3)	A16 OF 24	8019
MISCELLANEOUS SPAN DETAILS	A17 OF 24	8020
2'-8" RAILING DETAILS	A18 OF 24	8021
111'-0" BEAM DETAILS (BT-54)	A19 OF 24	8022
110'-0" BEAM DETAILS (BT-54)	A20 OF 24	8023
138'-0" BEAM DETAILS (BT-72)	A21 OF 24	8024
BEARING PAD LAYOUT & DETAILS	A22 OF 24	8025
GENERALIZED SOIL PROFILE	A23 OF 24	8026
GENERALIZED SOIL PROFILE	A24 OF 24	8027
BRIDGE B - S.R. 309 OVER PIGEON ROOST CREEK AT L.M. 8.5		
GENERAL NOTES & ESTIMATED QUANTITIES	B1 OF 22	8028
BRIDGE LAYOUT AND PROFILE SHEET	B2 OF 22	8029
FOUNDATION PLAN	B3 OF 22	8030
END BENTS NO. 1 & 6 DETAILS	B4 OF 22	8031
END BENTS DETAILS	B5 OF 22	8032
INTERMEDIATE BENTS NO. 2 & 3 DETAILS	B6 OF 22	8033
INTERMEDIATE BENTS NO. 2 & 3 DETAILS	B7 OF 22	8034
INTERMEDIATE BENTS NO. 4 & 5 DETAILS	B8 OF 22	8035
INTERMEDIATE BENTS NO. 4 & 5 DETAILS	B9 OF 22	8036
PLAN OF 41'-0" SPANS (1 & 5)	B10 OF 22	8037
PLAN OF 40'-0" SPANS (2 & 3)	B11 OF 22	8038
SPAN DETAILS SPANS (1, 2, 3, & 5)	B12 OF 22	8039
SPAN DETAILS SPANS (1, 2, 3, & 5)	B13 OF 22	8040
PLAN OF 80'-0" SPAN (4)	B14 OF 22	8041
SPAN DETAILS SPAN (4)	B15 OF 22	8042
MISCELLANEOUS SPAN DETAILS	B16 OF 22	8043
2'-8" RAILING DETAILS	B17 OF 22	8044
41'-0" BEAM DETAILS (TYPE 1+2)	B18 OF 22	8045
40'-0" BEAM DETAILS (TYPE 1+2)	B19 OF 22	8046
80'-0" BEAM DETAILS (TYPE III)	B20 OF 22	8047
BEARING PAD LAYOUT & DETAILS	B21 OF 22	8048
GENERALIZED SOIL PROFILE	B22 OF 22	8049
BRIDGE C - S.R. 309 OVER PIGEON ROOST CREEK AT L.M. 8.7		
GENERAL NOTES & ESTIMATED QUANTITIES	C1 OF 17	8050
BRIDGE LAYOUT AND PROFILE SHEET	C2 OF 17	8051
FOUNDATION PLAN	C3 OF 17	8052
END BENTS NO. 1 & 7 DETAILS	C4 OF 17	8053
END BENTS DETAILS	C5 OF 17	8054
INTERMEDIATE BENTS NO. 2 THRU 6 DETAILS	C6 OF 17	8055
INTERMEDIATE BENTS NO. 2 THRU 6 DETAILS	C7 OF 17	8056
PLAN OF 41'-0" SPANS (1 & 6)	C8 OF 17	8057
PLAN OF 40'-0" SPANS (2 THRU 5)	C9 OF 17	8058
SPAN DETAILS SPANS (1 THRU 6)	C10 OF 17	8059
SPAN DETAILS SPANS (1 THRU 6)	C11 OF 17	8060
MISCELLANEOUS SPAN DETAILS	C12 OF 17	8061
2'-8" RAILING DETAILS	C13 OF 17	8062
41'-0" BEAM DETAILS (TYPE 1+2)	C14 OF 17	8063
40'-0" BEAM DETAILS (TYPE 1+2)	C15 OF 17	8064
BEARING PAD LAYOUT & DETAILS	C16 OF 17	8065
GENERALIZED SOIL PROFILE	C17 OF 17	8066

BRIDGE DIVISION		
REVISIONS		
DATE	SHEET NO.	BY
9/14/18	8004, 8016, 8025, 8028, 8039, 8048, 8050, 8059, 8065, 8067, 8076, 8085, 8087, 8100, & 8110	CJR
9/17/18	8004, 8016, 8028, 8039, 8050, 8059, 8067, 8076, 8087, & 8100	CJR

JOHN STEVEN WEBBS
LICENSED PROFESSIONAL ENGINEER
26545
STATE OF MISSISSIPPI

DATE:09/17/2018

BY
REVISIONS
DATE

MISSISSIPPI DEPARTMENT OF TRANSPORTATION

DETAILED INDEX (BRIDGE)

PROJECT 100299/302000
BR-0914-00(008)

MARSHALL COUNTY

DESIGNER KSM CHECKER JSW
DETAILER RCP ISSUE DATE 09/27/2017

DIRECTOR OF STRUCTURES, STATE BRIDGE ENGINEER - JUSTIN WALKER, P.E.
DEP. DIR. OF STRUCTURES, ASST. STATE BRIDGE ENGINEER - SCOTT WESTERFIELD, P.E.

WORKING NUMBER
DI-BR-1

SHEET NUMBER
8001

ADDENDUM

STATE	PROJECT NO.
MISS.	BR-0914-00(008)

ESTIMATED QUANTITIES - S.R. 309 OVER PIGEON ROOST CREEK - BRIDGE AT STA. 824+78.88

Item / Location	Transverse Grooving S.Y.	Conventional Static Pile Load Test Each	HP14X89 Steel Piling L.F.	PDA Test, HP Steel Pile Each	PDA Test, Steel Pipe Pile Each	Pile Restrike Each	30" Steel Pipe Pile L.F.	36" Steel Pipe Pile L.F.	Bridge Concrete Class "AA" C.Y.	Bridge Concrete Class "BD" C.Y.	110 FT. Prestressed Concrete Beam Type BT-54 L.F.	138 FT. Prestressed Concrete Beam Type BT-72 L.F.	111 FT. Prestressed Concrete Beam Type BT-54 L.F.	Reinforcement Lbs.	Reinforcement, Corrosion Resistant Lbs.	Concrete Railing, 32" L.F.	Loose Riprap Size 300 Ton	Geotextile Under Riprap S.Y.
Spans	2578.89									776.25	1530.62	961.33	1533.00	130,841	6780	1160.50		
End Bents		1	2850.0	2		1			84.91					14,570			2334.0	2031.6
Int. Bents					2	1	980.0	1190.0	127.61					18,176			2254.2	1668.4
Totals	2578.89	1	2850.0	2	2	2	980.0	1190.0	212.52	776.25	1530.62	961.33	1533.00	163,587	6780	1160.50	4588.2	3700.0

GENERAL NOTES:

Specifications: Mississippi Standard Specifications for Road and Bridge Construction, 2017.

No change of plans will be permitted except by written approval of the Director of Structures, State Bridge Engineer. Minor changes in detail of design or construction procedure may be authorized by the Director of Structures, State Bridge Engineer provided such changes will not be cause for contract price adjustment.

The final surface texture of the bridge deck shall be mechanically transverse grooved in accordance with Sections 501 and 804 of the specifications. See Misc. Span Details for limits of transverse grooving on bridge deck.

Bridge concrete shall be class "AA" or "BD" as indicated on the plans.

Railing expansion joint material shall be bituminous fiber type unless otherwise noted.

No payment will be allowed for excavation incidental to the construction of end bents.

Bar bending details shall be in accordance with "Manual of Standard Practice for Detailing Reinforced Concrete Structures" (ACI 315R-94).

Reinforcement order lists and required placing plans shall be furnished in accordance with Section 805 of the Mississippi Standard Specifications. Partial submittals are not acceptable.

Shop drawings of prestressed beams, including an erection plan, shall be submitted in duplicate to the Director of Structures, State Bridge Engineer for approval prior to the manufacture of beams.

The Fabricator shall provide camber data at release and immediately prior to shipping.

The Contractor shall provide camber data after erection. The Contractor should be aware that the deflection diagram may be modified based on the provided camber data. Therefore, deck grades should be set only after notification from the Director of Structures, State Bridge Engineer.

Concrete surfaces shall receive a Class 2 rubbed or spray finish in accordance with the specifications.

Reinforcing steel shall be ASTM A615, Grade 60, unless otherwise noted.

Work for which no pay item is provided in the proposal will not be paid for directly and compensation therefore will be included in the prices and payments for bid items.

GIRDER DEFLECTION NOTES:

The girder deflection diagrams shown in these plans were prepared and intended for design and estimation purposes only. Actual bridge girder deflections may differ from the deflection diagrams shown in these plans.

It is the Contractor's responsibility to construct the bridge to meet the requirements of the plans and specifications including, but not limited to, the requirements for bridge deck smoothness.

Prior to formwork construction, the Contractor shall submit three (3) copies of a proposed BRIDGE SUPERSTRUCTURE CONSTRUCTION PLAN to the Director of Structures, State Bridge Engineer for review, through the Project Engineer. This submittal shall include all calculations, assumptions and parameters used by the Contractor to determine bridge girder deflections and form grade elevations. This submittal shall also include an erection and construction procedure that addresses the construction means and methodologies used by the Contractor and shall consider effects including, but not limited to, construction phasing, pouring schedules, applied permanent and construction loading, and shall include calculations and details of temporary girder bracing systems used to ensure girder stability and to counter the effects of girder tilt.

After girder erection and prior to deck construction, the Contractor shall submit deck thickness verification calculations for each girder. These calculations shall include a comparison of the erected girder top flange profiles versus the plan deck grade elevations over each girder plus the anticipated girder deflection due to applied permanent dead load and creep.

Three (3) copies of the deck thickness verification calculations and any proposed remediation measures to correct for thin deck areas shall be submitted to the Director of Structures, State Bridge Engineer for review, through the Project Engineer.

The BRIDGE SUPERSTRUCTURE CONSTRUCTION PLAN and the deck thickness verification calculations shall be prepared and stamped by a Mississippi Registered Professional Engineer.

RIPRAP NOTE:

All RipRap and Geotextile fabric shown in the Bridge Plans are included in the Estimated Quantities (Bridge).

Geotextile fabric is required under all RipRap.

PILE HAMMER NOTE:

Steel H-piles shall be driven with a pile hammer capable of generating a rated energy of no more than 66,150 ft-lb of energy.

Steel pipe piles shall be driven with a pile hammer capable of generating a rated energy of no less than 91,000 ft-lb of energy.

GENERAL PILE NOTES:

Test piles shall be driven as permanent piles at the location shown in the PDA TEST PILE SCHEDULE and will be paid for as test piles only.

The Director of Structures, State Bridge Engineer may authorize test piles driven outside the structure limits.

Test piles shall be driven as a continuous operation, to the bearing capacity and the minimum ground penetration shown in the PDA TEST PILE SCHEDULE, unless otherwise directed by the Director of Structures, State Bridge Engineer.

Permanent piles shall be driven to an elevation no higher than the elevation shown in the REQUIRED ULTIMATE PILE BEARING CAPACITY AND MINIMUM TIP ELEVATION SCHEDULE.

The tip elevation of piling, for hydraulic structures, may be determined by scour line.

When feasible, bearing piles shall be driven full length and shall be spliced, only, as approved by the Director of Structures, State Bridge Engineer.

Welding shall be done by the ELECTRIC ARC process. Welders shall be certified and electrodes shall be approved.

When loading tests are required, the maximum test load shall be one and one half (1 1/2) times the minimum pile bearing capacity.

Pile hammer leads used for all PDA test piles and PDA restrikes shall be large enough to provide a minimum of 3" of clearance on each side of the pile in order to properly place and protect PDA gages.

PDA test piles shall require a 1 day and 7 day restrike unless otherwise directed by the Engineer.

Pile lengths and driving criteria shall be provided based on the results of the PDA test piles.

The required ultimate pile bearing shown in the REQUIRED ULTIMATE PILE BEARING AND MINIMUM TIP ELEVATION SCHEDULE includes the LRFD resistance factor from PDA of 0.65. Ultimate Bearing Capacities shown include the additional skin friction required to drive through the material above the 100 year scour line.

All H-Piles shall be HP 14X89, A.S.T.M A572 Grade 50

SACRIFICIAL STEEL PIPE PILE NOTES:

All Steel Pipe Piles shall be ASTM A252, Grade 3 (Fy = 45,000 psi).

Steel Pipe Piles are intended to be open ended.

Welding shall comply with ANSI/AWS D1.5 Bridge Welding Code and be performed by a certified welder.

The out of position test pile at Bent 4 shall be driven and the results analyzed by MDOT prior to driving the test pile in Bent 2. Recommended test pile length may be revised for Bent 2 based on the results of test pile at Bent 4.

DESIGN DATA:

Specifications. . . . . A.A.S.H.T.O., L.R.F.D. 7th Edition, 2014 with 2015 & 2016 Interims
Loading. HL-93
Roadway width. . . . . 44'-0" Gutter to Gutter
Concrete. . . . . .Class "AA" and "BD" (4,000 p.s.i.)

DRAINAGE DATA:

Drainage area. . . . . 108.0 sq. mi.
Total Q25 (U.S.G.S.) . . . . . .20,636 c.f.s.
Effective area . . . . . 2,986 sq. ft.

SEISMIC DESIGN DATA:

Seismic Design Category. . . . . Category B
Site Class Definition . . . . . .Site Class C
Importance Category . . . . . .Other

REQUIRED ULTIMATE PILE BEARING CAPACITY AND MINIMUM TIP ELEVATION SCHEDULE

Bent No.	Pile Size	Ult. Bearing Tons	Est. Length Feet	Min. Tip Elevation
1	HP 14x89	115	70	257.0
2	30" Dia.	230	70	257.0
3	36" Dia.	371	85	241.0
4	36" Dia.	371	85	242.0
5	30" Dia.	230	80	249.0
6	HP 14x89	115	80	249.0

*NOTE: All est. pile lengths were controlled by scour.

PDA Test Pile Schedule

Bent No.	Min. Length Feet	Tip Elevation
1	80	247.0
2	80	245.0
4 *	105	222.0
6	90	239.0

*NOTE: Out of position, uncoated, pipe pile located no less than 3 pile diameters and no greater than 5 pile diameters from production pipe piles at Bent 4.

NOTE: PDA test pile results for all bents must be submitted to The Director Of Structures, State Bridge Engineer before permanent pile lengths will be recommended.

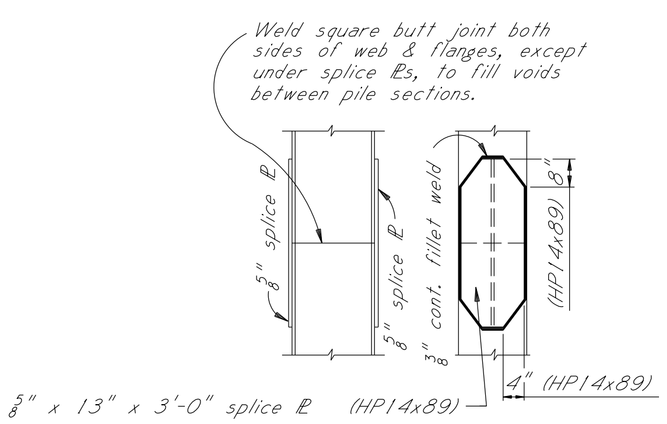

PILE SPLICE DETAIL

HP14x89 steel piles

NOTE: In lieu of splice plates, prefabricated splicers may be used. Prefabricated splicers shall be submitted for approval by the Director of Structures, State Bridge Engineer.

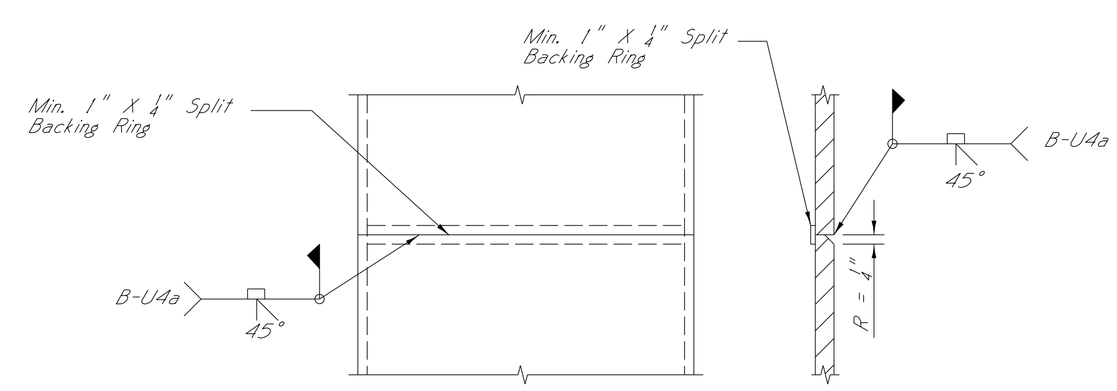

PIPE PILE SPLICE DETAIL

30" or 36" Diam. Steel Pipe Piles

1
2

JOHN STEVEN WEBBS
LICENSED PROFESSIONAL ENGINEER
28545
STATE OF MISSISSIPPI

DATE:09/17/2018

DATE	REVISIONS	BY
9/17/18	SPECIAL PROVISION REMOVED	CJR
9/14/18	REVISED NOTE	CJR

MISSISSIPPI DEPARTMENT OF TRANSPORTATION
BRIDGE AT STA. 824+78.88
S.R. 309 OVER PIGEON ROOST CREEK AT L.M. 8.4
GENERAL NOTES & EST. QUANTITIES

PROJECT 100299/302000
BR-0914-00(008)

MARSHALL COUNTY

WORKING NUMBER A1 OF 24

DESIGNER KSM CHECKER JSW
DETAILER RCP ISSUE DATE 09/27/2017

DIRECTOR OF STRUCTURES, STATE BRIDGE ENGINEER - JUSTIN WALKER, P.E.
DEP. DIR. OF STRUCTURES, ASST. STATE BRIDGE ENGINEER - SCOTT WESTERFIELD, P.E.

SHEET NUMBER 8004

2 1

ADDENDUM

STATE	PROJECT NO.
MISS.	BR-0914-00(008)

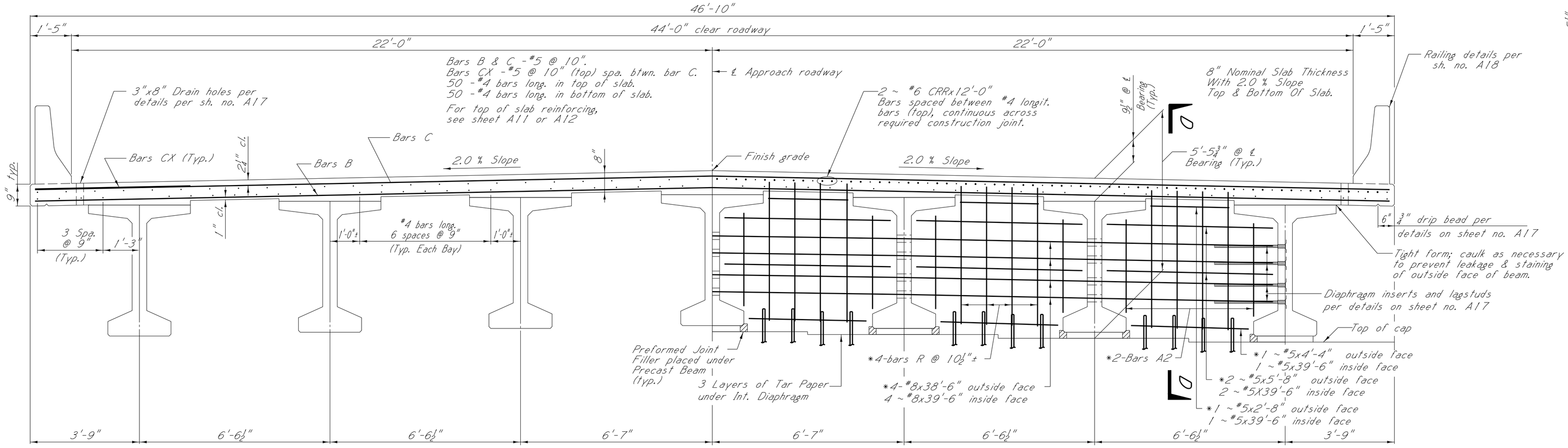

PART SECTION NEAR MIDSPAN

PART SECTION NEAR 1'-1½" INT. DIAPHRAGM

*NOTE: Typical each bay

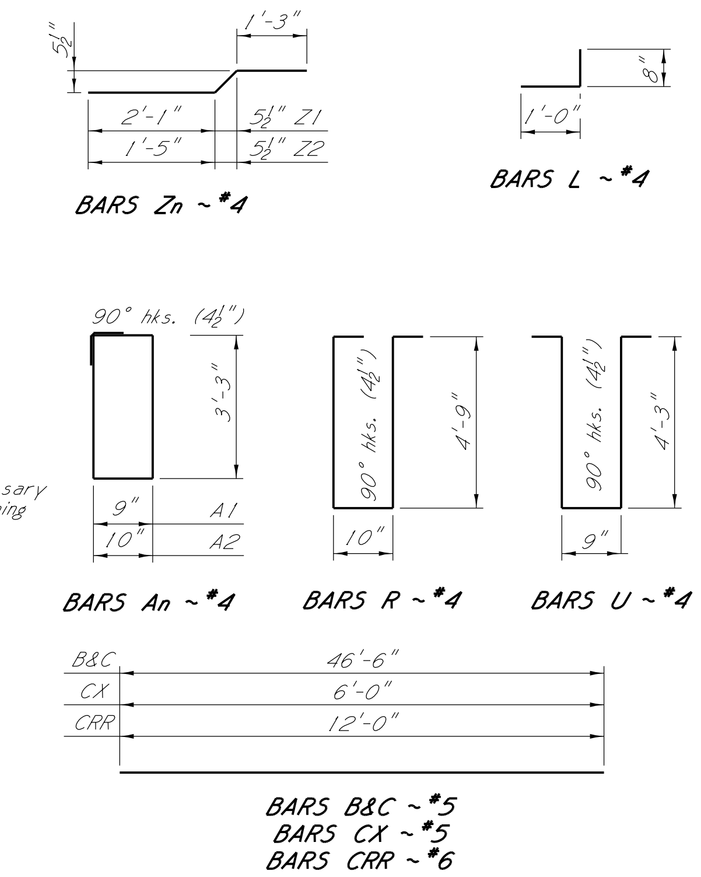

BAR BENDING DETAILS

Dimensions are out to out

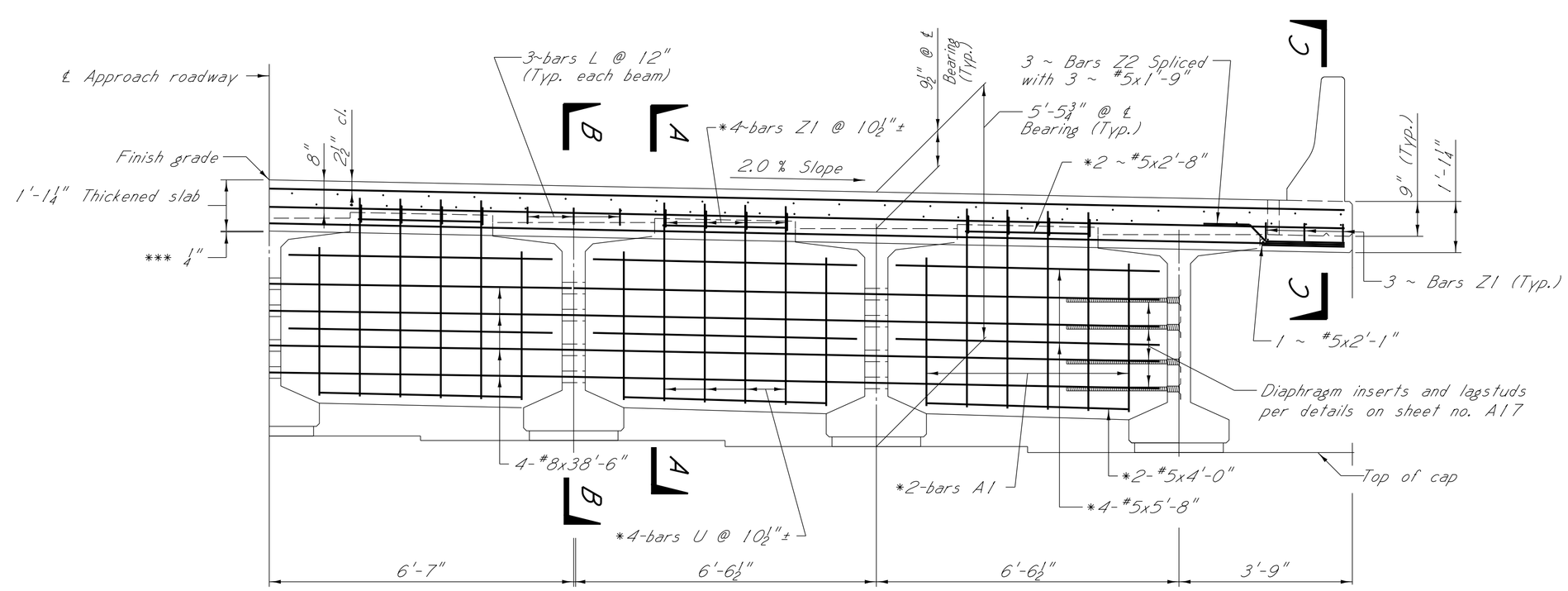

***NOTE: ¼" Neoprene pad along top of backwall with 2 layers of tar paper on top of pad.

PART SECTION NEAR BRIDGE END

*NOTE: Typical each bay

NOTE:

For GENERAL NOTES, railing details and other typical span details see sheets no. A17 & A18.

All concrete in diaphragms, deck, and bridge rail shall be Class "BD"

Any additional concrete and steel required in the fillet resulting from an unexpected camber in the beam will not be directly paid for and shall be considered an absorbed item.

2 The volume of concrete in the fillets between the bottom of the nominal slab and the top of the beam has been estimated by using one half (1/2) of the fillet height, at the bearing, multiplied by the top flange width and the full length of the beam. This volume shall be used for final pay quantity.

Insure that holes in beam webs are completely filled with diaphragm concrete.

1 CRR (Corrosion Resistant Reinforcement) bars shall be provided and paid for in accordance with Section 805.

DESIGN DATA:

Specifications. . . . . A.A.S.H.T.O. L.R.F.D. 7th Edition, 2014 with 2015 & 2016 Interims
Concrete. . . . . .Class "BD" (4,000 psi)
Loading. HL-93
Prestressed beam details. . . See sheet no. A19 or A20

JOHN STEVEN WESTER
LICENSED PROFESSIONAL ENGINEER
26545
STATE OF MISSISSIPPI
DATE:09/17/2018

DATE	REVISIONS	BY
9/17/18	REVISED NOTE	CJR
9/14/18	REVISED NOTE	CJR

MISSISSIPPI DEPARTMENT OF TRANSPORTATION
BRIDGE AT STA. 824+78.88

SPAN DETAILS
SPANS (1, 2, 4, & 5)

PROJECT 100299/302000
BR-0914-00(008)

MARSHALL COUNTY

DESIGNER KSM CHECKER JSW
DETAILER RCP ISSUE DATE 09/27/2017

DIRECTOR OF STRUCTURES, STATE BRIDGE ENGINEER - JUSTIN WALKER, P.E.
DEP. DIR. OF STRUCTURES, ASST. STATE BRIDGE ENGINEER - SCOTT WESTERFIELD, P.E.

WORKING NUMBER A13 OF 24

SHEET NUMBER 8016

2 1

ADDENDUM

STATE	PROJECT NO.
MISS.	BR-0914-00(008)

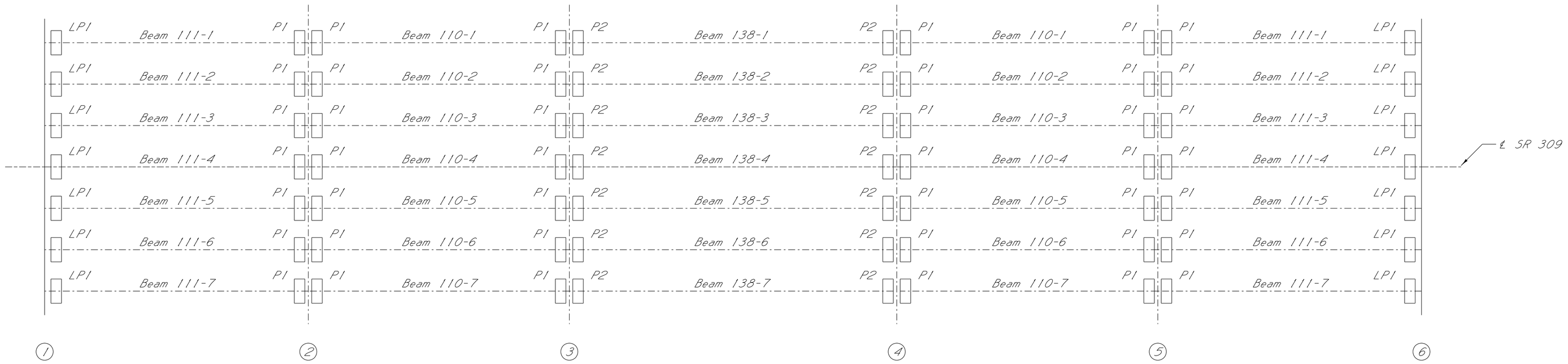

BEAM & BEARING PAD LAYOUT

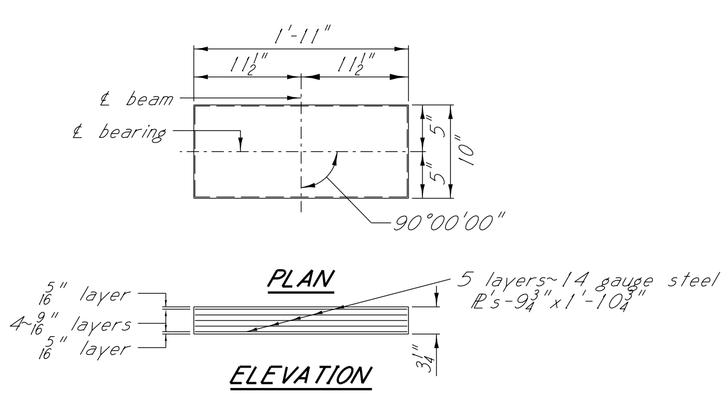

LAMINATED NEOPRENE PAD DETAIL - LP1

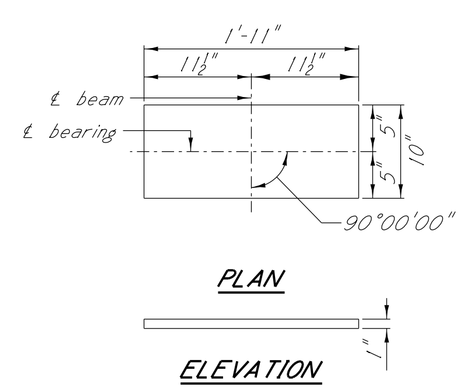

NEOPRENE PAD DETAIL - P1

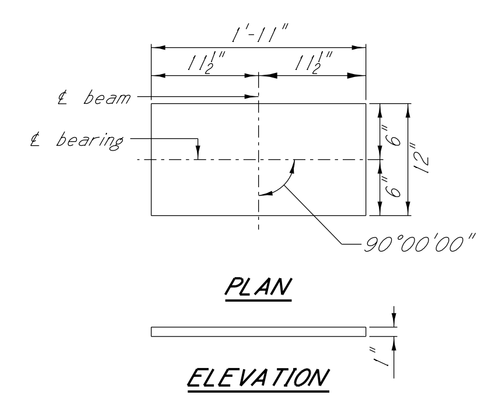

NEOPRENE PAD DETAIL - P2

NOTES:

In no case shall neoprene pads be field cut. Bearing area on top of cap shall be cast smooth and true to grade.

1 All structural steel shall be ASTM Grade 36 or ASTM Grade 50.

Elastomer for the laminated neoprene pads shall have a hardness of 50 durometer with a minimum shear modulus at 73℄F of 0.095 k.s.i. and a maximum shear modulus at 73℄F of 0.130 k.s.i.

Elastomer for the plain neoprene pads shall have a hardness of 70 durometer in accordance with section 714.10.2 of the specification. The plain neoprene pad shall have a minimum shear modulus at 73℄F of 0.200 k.s.i. and a maximum shear modulus at 73℄F of 0.300 k.s.i.

Testing acceptance procedure shall be in accordance with section 714.10.6 of the Specifications.

To determine the dimension from the finish grade to cap, the assumption is made that the compressed thickness of the neoprene pad is 1/16" less than the original thickness and that the original camber of the beams will be within the limits shown on the beam detail sheets. The Director of Structures, State Bridge Engineer shall be notified if the camber is not within these limits.

JOHN STEVEN WEBER
LICENSED PROFESSIONAL ENGINEER
26545
STATE OF MISSISSIPPI
DATE:09/14/2018

DATE	REVISIONS	BY
9/14/18	REVISED NOTE	CJR

MISSISSIPPI DEPARTMENT OF TRANSPORTATION
BRIDGE AT STA. 824+78.88

BEARING PAD LAYOUT & DETAILS

PROJECT 100299/302000
BR-0914-00(008)

MARSHALL COUNTY

DESIGNER KSM CHECKER JSW
DETAILER RCP ISSUE DATE 09/27/2017
DIRECTOR OF STRUCTURES, STATE BRIDGE ENGINEER - JUSTIN WALKER, P.E.
DEP. DIR. OF STRUCTURES, ASST. STATE BRIDGE ENGINEER - SCOTT WESTERFIELD, P.E.

WORKING NUMBER A22 OF 24

SHEET NUMBER 8025

1

ADDENDUM

STATE	PROJECT NO.
MISS.	BR-0914-00(008)

ESTIMATED QUANTITIES - S.R. 309 OVER PIGEON ROOST CREEK - BRIDGE AT STA. 833+34.21

Item / Location	Transverse Grooving	Conventional Static Pile Load Test	HP12X53 Steel Piling	PDA Test, HP Steel Pile	PDA Test, Steel Pipe Pile	Pile Restrike	30" Steel Pipe Pile	Bridge Concrete Class "AA"	Bridge Concrete Class "BD"	40 FT. Prestressed Concrete Beam TYPE-I+2	80 FT. Prestressed Concrete Beam TYPE III	41 FT. Prestressed Concrete Beam Type-I+2	Reinforcement	Reinforcement, Corrosion Resistant	Concrete Railing, 32"	Loose Riprap Size 300	Geotextile Under Riprap
	S.Y.	Each	L.F.	Each	Each	Each	L.F.	C.Y.	C.Y.	L.F.	L.F.	L.F.	Lbs.	Lbs.	L.F.	Ton	S.Y.
Spans	1073.70								335.35	550.67	556.00	553.00	67,305	6780	483.17		
End Bents		1	1260.0	1		1		58.79					9,854			2484.0	2306.5
Int. Bents					2	1	1960.0	126.75					14,890				
Totals	1073.70	1	1260.0	1	2	2	1960.0	185.54	335.35	550.67	556.00	553.00	92,049	6780	483.17	2484.0	2306.5

GENERAL NOTES:

Specifications: Mississippi Standard Specifications for Road and Bridge Construction, 2017.

No change of plans will be permitted except by written approval of the Director of Structures, State Bridge Engineer. Minor changes in detail of design or construction procedure may be authorized by the Director of Structures, State Bridge Engineer provided such changes will not be cause for contract price adjustment.

The final surface texture of the bridge deck shall be mechanically transverse grooved in accordance with Sections 501 and 804 of the specifications. See Misc. Span Details for limits of transverse grooving on bridge deck.

Bridge concrete shall be class "AA" or "BD" as indicated on the plans.

Railing expansion joint material shall be bituminous fiber type unless otherwise noted.

No payment will be allowed for excavation incidental to the construction of end bents.

Bar bending details shall be in accordance with "Manual of Standard Practice for Detailing Reinforced Concrete Structures" (ACI 315R-94).

Reinforcement order lists and required placing plans shall be furnished in accordance with Section 805 of the Mississippi Standard Specifications. Partial submittals are not acceptable.

Shop drawings of prestressed beams, including an erection plan, shall be submitted in duplicate to the Director of Structures, State Bridge Engineer for approval prior to the manufacture of beams.

The Fabricator shall provide camber data at release and immediately prior to shipping.

The Contractor shall provide camber data after erection. The Contractor should be aware that the deflection diagram may be modified based on the provided camber data. Therefore, deck grades should be set only after notification from the Director of Structures, State Bridge Engineer.

Concrete surfaces shall receive a Class 2 rubbed or spray finish in accordance with the specifications.

Reinforcing steel shall be ASTM A615, Grade 60, unless otherwise noted.

Work for which no pay item is provided in the proposal will not be paid for directly and compensation therefore will be included in the prices and payments for bid items.

GIRDER DEFLECTION NOTES:

The girder deflection diagrams shown in these plans were prepared and intended for design and estimation purposes only. Actual bridge girder deflections may differ from the deflection diagrams shown in these plans.

It is the Contractor's responsibility to construct the bridge to meet the requirements of the plans and specifications including, but not limited to, the requirements for bridge deck smoothness.

Prior to formwork construction, the Contractor shall submit three (3) copies of a proposed BRIDGE SUPERSTRUCTURE CONSTRUCTION PLAN to the Director of Structures, State Bridge Engineer for review, through the Project Engineer. This submittal shall include all calculations, assumptions and parameters used by the Contractor to determine bridge girder deflections and form grade elevations. This submittal shall also include an erection and construction procedure that addresses the construction means and methodologies used by the Contractor and shall consider effects including, but not limited to, construction phasing, pouring schedules, applied permanent and construction loading, and shall include calculations and details of temporary girder bracing systems used to ensure girder stability and to counter the effects of girder tilt.

After girder erection and prior to deck construction, the Contractor shall submit deck thickness verification calculations for each girder. These calculations shall include a comparison of the erected girder top flange profiles versus the plan deck grade elevations over each girder plus the anticipated girder deflection due to applied permanent dead load and creep.

Three (3) copies of the deck thickness verification calculations and any proposed remediation measures to correct for thin deck areas shall be submitted to the Director of Structures, State Bridge Engineer for review, through the Project Engineer.

The BRIDGE SUPERSTRUCTURE CONSTRUCTION PLAN and the deck thickness verification calculations shall be prepared and stamped by a Mississippi Registered Professional Engineer.

RIPRAP NOTE:

All RipRap and Geotextile fabric shown in the Bridge Plans are included in the Estimated Quantities (Bridge).

Geotextile fabric is required under all RipRap.

PILE HAMMER NOTE:

Steel H-piles shall be driven with a pile hammer capable of generating a rated energy of no more than 66,150 ft-lb of energy.

Steel pipe piles shall be driven with a pile hammer capable of generating a rated energy of no less than 91,000 ft-lb of energy.

GENERAL PILE NOTES:

Test piles shall be driven as permanent piles at the location shown in the PDA TEST PILE SCHEDULE and will be paid for as test piles only.

The Director of Structures, State Bridge Engineer may authorize test piles driven outside the structure limits.

Test piles shall be driven as a continuous operation, to the bearing capacity and the minimum ground penetration shown in the PDA TEST PILE SCHEDULE, unless otherwise directed by the Director of Structures, State Bridge Engineer.

Permanent piles shall be driven to an elevation no higher than the elevation shown in the REQUIRED ULTIMATE PILE BEARING CAPACITY AND MINIMUM TIP ELEVATION SCHEDULE.

The tip elevation of piling, for hydraulic structures, may be determined by scour line.

When feasible, bearing piles shall be driven full length and shall be spliced, only, as approved by the Director of Structures, State Bridge Engineer.

Welding shall be done by the ELECTRIC ARC process. Welders shall be certified and electrodes shall be approved.

When loading tests are required, the maximum test load shall be one and one half (1 1/2) times the minimum pile bearing capacity.

Pile hammer leads used for all PDA test piles and PDA restrikes shall be large enough to provide a minimum of 3" of clearance on each side of the pile in order to properly place and protect PDA gages.

PDA test piles shall require a 1 day and 7 day restrike unless otherwise directed by the Engineer.

Pile lengths and driving criteria shall be provided based on the results of the PDA test piles.

The required ultimate pile bearing shown in the REQUIRED ULTIMATE PILE BEARING AND MINIMUM TIP ELEVATION SCHEDULE includes the LRFD resistance factor from PDA of 0.65. Ultimate Bearing Capacities shown include the additional skin friction required to drive through the material above the 100 year scour line.

All H-Piles shall be HP 12X53, A.S.T.M A572 Grade 50

SACRIFICIAL STEEL PIPE PILE NOTES:

All Steel Pipe Piles shall be ASTM A252, Grade 3 (Fy = 45,000 psi).

Steel Pipe Piles are intended to be open ended.

Welding shall comply with ANSI/AWS D1.5 Bridge Welding Code and be performed by a certified welder.

The out of position test pile at Bent 3 shall be driven and the results analyzed by MDOT prior to driving the test pile in Bent 5. Recommended test pile length may be revised for Bent 5 based on the results of test pile at Bent 3.

DESIGN DATA:

Specifications. . . . . A.A.S.H.T.O., L.R.F.D. 7th Edition, 2014 with 2015 & 2016 Interims
Loading. HL-93
Roadway width. . . . . 44'-0" Gutter to gutter
Concrete. . . . . Class "AA" and "BD" (4,000 p.s.i.)

DRAINAGE DATA:

Drainage area. . . . . 108.0 sq. mi.
Total Q25 (U.S.G.S.) . . . . . 5,977 c.f.s.
Effective area . . . . . 1,754 sq. ft.

SEISMIC DESIGN DATA:

Seismic Design Category . . . . . Category B
Site Class Definition . . . . . Site Class C
Importance Category . . . . . Other

REQUIRED ULTIMATE PILE BEARING CAPACITY AND MINIMUM TIP ELEVATION SCHEDULE

Bent No.	Pile Size	Ult. Bearing Tons	Est. Length Feet	Min. Tip Elevation
1	HP 12x53	150	60	272.0
2	30" Dia.	155	75	256.0
3	30" Dia.	155	75	256.0
4	30" Dia.	185	70	259.0
5	30" Dia.	185	70	259.0
6	HP 12x53	150	60	271.0

*NOTE: All est. pile lengths were controlled by scour.

PDA Test Pile Schedule		
Bent No.	Min. Length Feet	Tip Elevation
1	70	262.0
3 *	95	236.0
5	90	239.0

*NOTE: Out of position, uncoated, pipe pile located no less than 3 pile diameters and no greater than 5 pile diameters from production pipe piles at Bent 3.

NOTE: PDA test pile results for all bents must be submitted to The Director Of Structures, State Bridge Engineer before permanent pile lengths will be recommended.

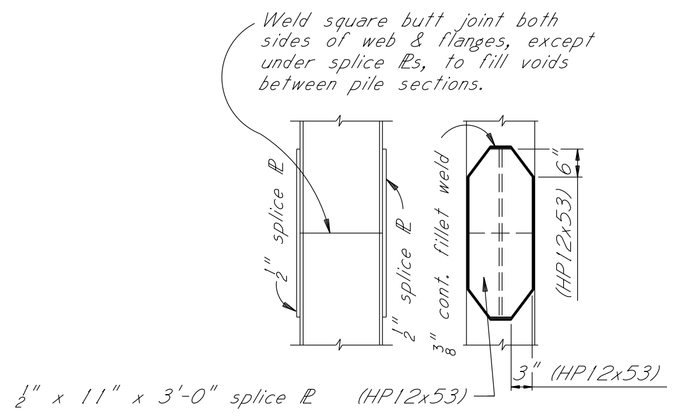

PILE SPLICE DETAIL

HP12x53 steel piles

NOTE: In lieu of splice plates, prefabricated splicers may be used. Prefabricated splicers shall be submitted for approval by the Director of Structures, State Bridge Engineer.

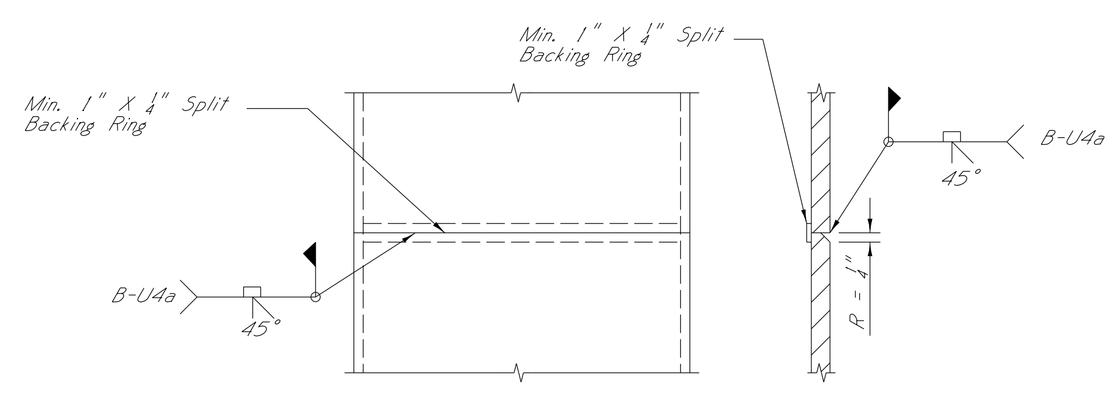

PIPE PILE SPLICE DETAIL

30" Diam. Steel Pipe Piles

DATE:09/17/2018

DATE	REVISIONS	BY
9/17/18	SPECIAL PROVISION REMOVED	C.JR
9/14/18	REVISED NOTE	C.JR

MISSISSIPPI DEPARTMENT OF TRANSPORTATION
BRIDGE AT STA. 833+34.21
S.R. 309 OVER PIGEON ROOST CREEK AT L.M. 8.5
GENERAL NOTES & EST. QUANTITIES

PROJECT 100299/302000
BR-0914-00(008)

MARSHALL COUNTY

WORKING NUMBER B1 OF 22

SHEET NUMBER 8028

DESIGNER KSM CHECKER JSW
DETAILER RCP ISSUE DATE 09/27/2017
DIRECTOR OF STRUCTURES, STATE BRIDGE ENGINEER - JUSTIN WALKER, P.E.
DEP. DIR. OF STRUCTURES, ASST. STATE BRIDGE ENGINEER - SCOTT WESTERFIELD, P.E.

ADDENDUM

STATE	PROJECT NO.
MISS.	BR-0914-00(008)

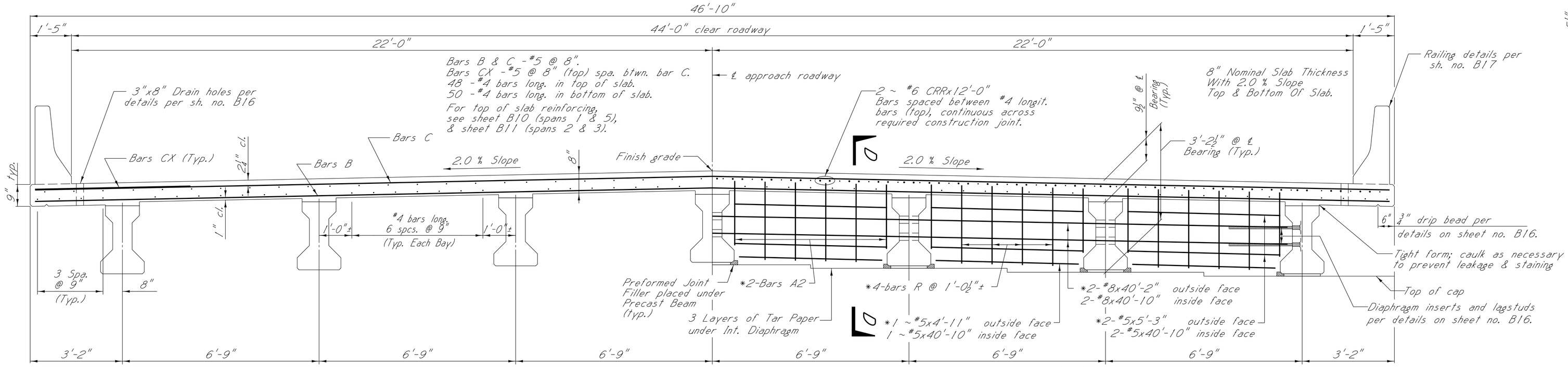

PART SECTION NEAR MIDSPAN

PART SECTION NEAR 1'-1½" INT. DIAPHRAGM

*NOTE: Typical each bay

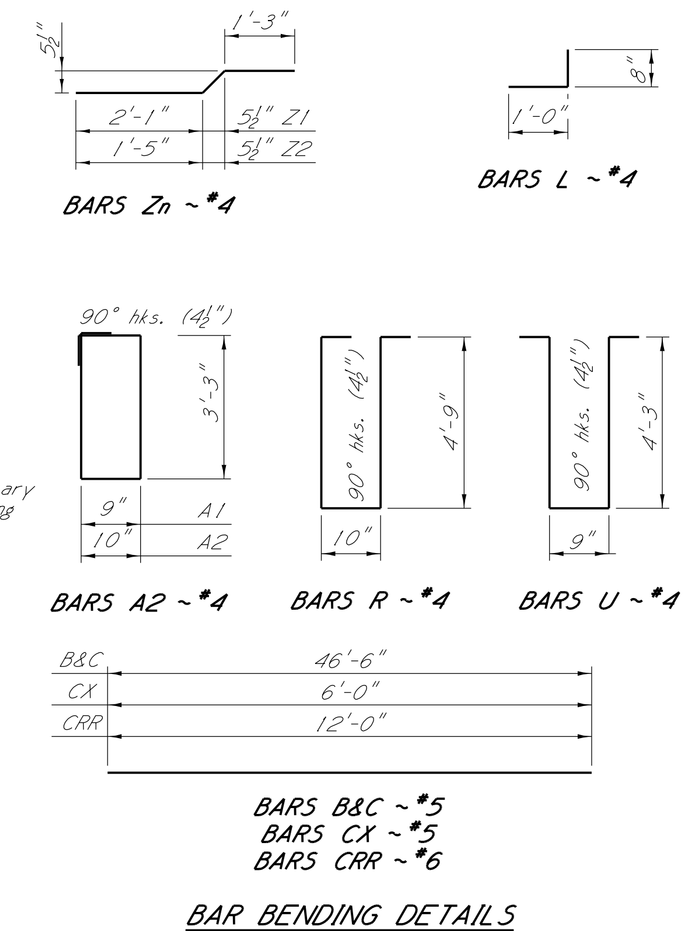

BAR BENDING DETAILS

Dimensions are out to out

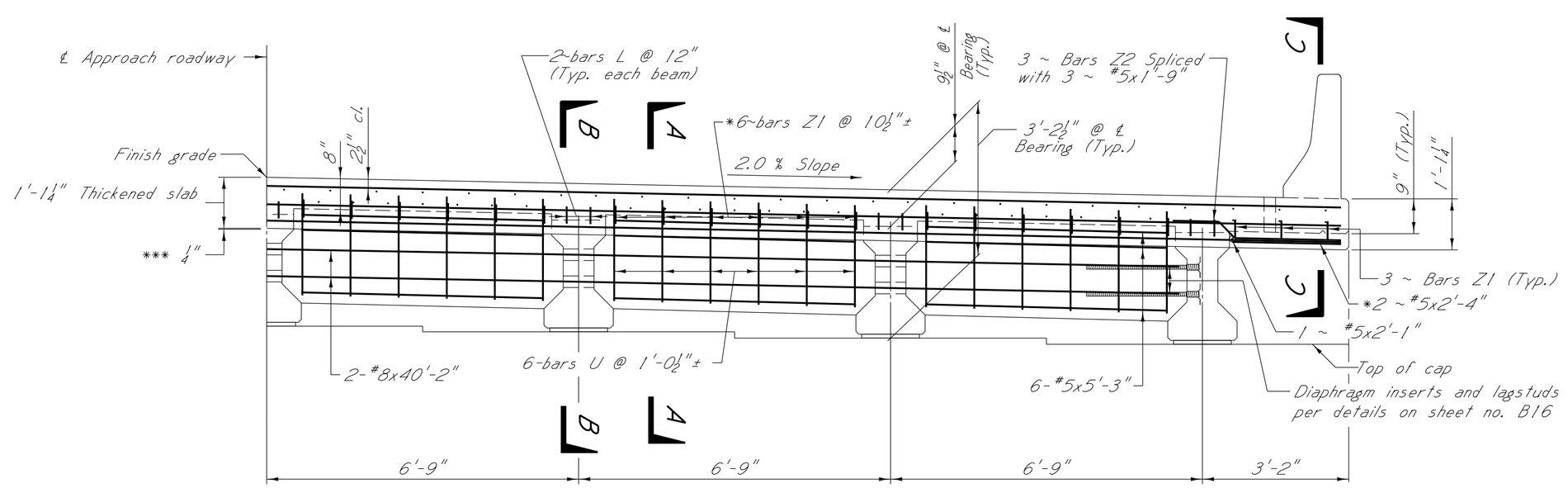

PART SECTION NEAR BRIDGE END

*NOTE: Typical each bay

***NOTE: ¼" Neoprene pad along top of backwall with 2 layers of tar paper on top of pad.

NOTE:

For GENERAL NOTES, railing details and other typical span details see sheets no. B16 & B17.

All concrete in diaphragms, deck, and bridge rail shall be Class "BD"

2 The volume of concrete in the fillets between the bottom of the nominal slab and the top of the beam has been estimated by using one half (1/2) of the fillet height, at the bearing, multiplied by the top flange width and the full length of the beam. This volume shall be used for final pay quantity.

Insure that holes in beam webs are completely filled with diaphragm concrete.

1 CRR (Corrosion Resistant Reinforcement) bars shall be provided and paid for in accordance with Section 805.

DESIGN DATA:

Specifications. . . . . A.A.S.H.T.O. L.R.F.D. 7th Edition, 2014 with 2015 & 2016 Interims
Concrete. . . . . Class "BD" (4,000 psi)
Loading. HL-93
Prestressed beam details. . . See sheet no. B18-B20.

JOHN STEVEN WESTER LICENSED PROFESSIONAL ENGINEER 26545 STATE OF MISSISSIPPI

DATE:09/17/2018

DATE	REVISIONS	BY
9/17/18	REVISED NOTE	CJR
9/14/18	REVISED NOTE	CJR

MISSISSIPPI DEPARTMENT OF TRANSPORTATION
BRIDGE AT STA. 833+34.21

SPAN DETAILS SPANS (1, 2, 3 & 5)

PROJECT 100299/302000
BR-0914-00(008)

MARSHALL COUNTY

DESIGNER KSM CHECKER JSW
DETAILER RCP ISSUE DATE 09/27/2017
DIRECTOR OF STRUCTURES, STATE BRIDGE ENGINEER - JUSTIN WALKER, P.E.
DEP. DIR. OF STRUCTURES, ASST. STATE BRIDGE ENGINEER - SCOTT WESTERFIELD, P.E.

WORKING NUMBER B12 OF 22

SHEET NUMBER 8039

2 1

ADDENDUM

STATE	PROJECT NO.
MISS.	BR-0914-00(008)

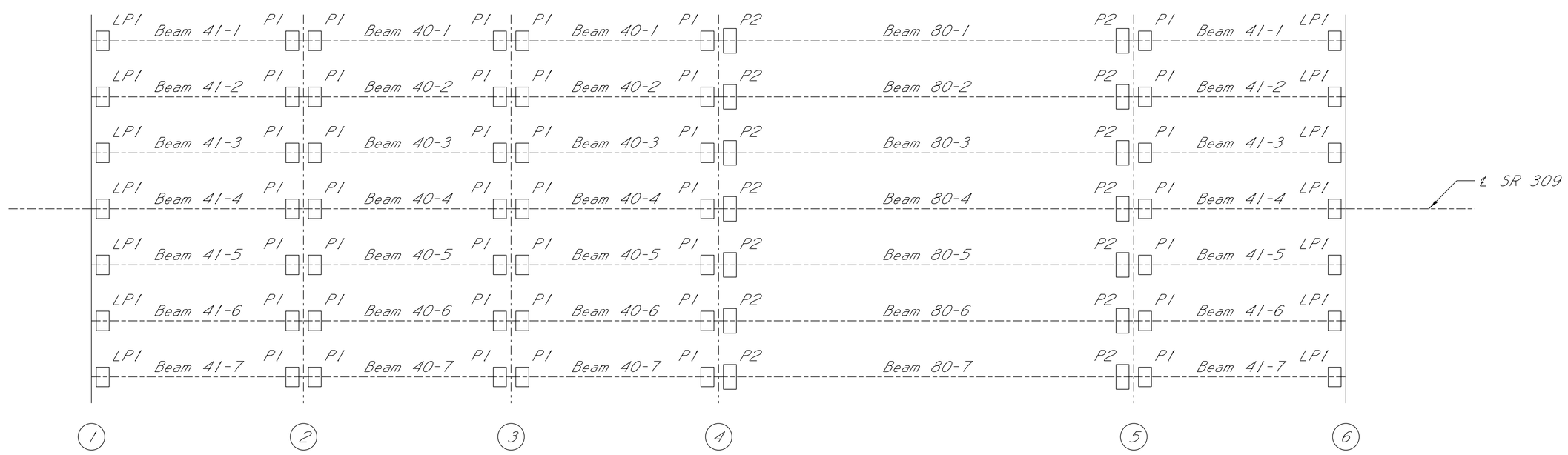

BEAM & BEARING PAD LAYOUT

NOTES:

In no case shall neoprene pads be field cut. Bearing area on top of cap shall be cast smooth and true to grade.

1 All structural steel shall be ASTM Grade 36 or ASTM Grade 50.

Elastomer for the laminated neoprene pads shall have a hardness of 50 durometer with a minimum shear modulus at 73℉ of 0.095 k.s.i. and a maximum shear modulus at 73℉ of 0.130 k.s.i.

Elastomer for the plain neoprene pads shall have a hardness of 70 durometer in accordance with section 714.10.2 of the specification. The plain neoprene pad shall have a minimum shear modulus at 73℉ of 0.200 k.s.i. and a maximum shear modulus at 73℉ of 0.300 k.s.i.

Testing acceptance procedure shall be in accordance with section 714.10.6 of the Specifications.

To determine the dimension from the finish grade to cap, the assumption is made that the compressed thickness of the neoprene pad is $\frac{1}{16}$" less than the original thickness and that the original camber of the beams will be within the limits shown on the beam detail sheets. The director of structures, state bridge engineer shall be notified if the camber is not within these limits.

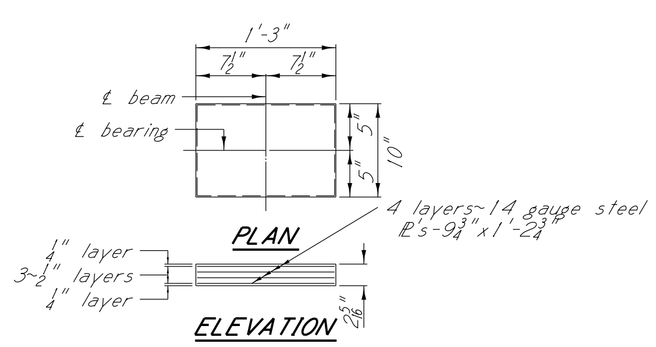

LAMINATED NEOPRENE PAD DETAIL - LP1

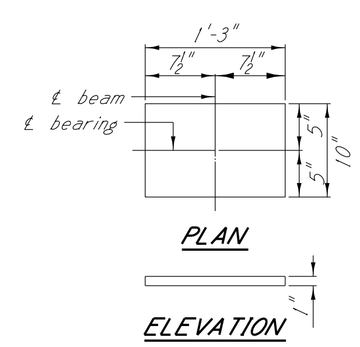

NEOPRENE PAD DETAIL - P1

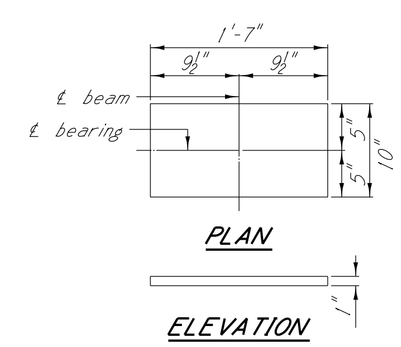

NEOPRENE PAD DETAIL - P2

JOHN STEVEN WESTER
LICENSED PROFESSIONAL ENGINEER
26545
STATE OF MISSISSIPPI
DATE:09/14/2018

DATE	REVISIONS	BY
9/14/18	REVISED NOTE	CJR

MISSISSIPPI DEPARTMENT OF TRANSPORTATION
BRIDGE AT STA. 833+34.21

BEARING PAD LAYOUT & DETAILS

PROJECT 100299/302000
BR-0914-00(008)

MARSHALL COUNTY

DESIGNER KSM CHECKER JSW
DETAILER RCP ISSUE DATE 09/27/2017
DIRECTOR OF STRUCTURES, STATE BRIDGE ENGINEER - JUSTIN WALKER, P.E.
DEP. DIR. OF STRUCTURES, ASST. STATE BRIDGE ENGINEER - SCOTT WESTERFIELD, P.E.

WORKING NUMBER B21 OF 22

SHEET NUMBER 8048

ADDENDUM

STATE	PROJECT NO.
MISS.	BR-0914-00(008)

ESTIMATED QUANTITIES - S.R. 309 OVER PIGEON ROOST CREEK - BRIDGE AT STA. 840+89.21

Item / Location	Transverse Grooving S.Y.	Conventional Static Pile Load Test Each	HP12X53 Steel Piling L.F.	PDA Test, HP Steel Pile Each	PDA Test, Steel Pipe Pile Each	Pile Restrike Each	24" Steel Pipe Pile L.F.	Bridge Concrete Class "AA" C.Y.	Bridge Concrete Class "BD" C.Y.	40 FT. Prestressed Concrete Beam TYPE-1+2 L.F.	41 FT. Prestressed Concrete Beam TYPE-1+2 L.F.	Reinforcement Lbs.	Reinforcement, Corrosion Resistant Lbs.	Concrete Railing, 32" L.F.	Loose Riprap Size 300 Ton	Geotextile Under Riprap S.Y.
Spans	1073.70								331.19	1101.33	553.00	67,154	8475	483.17		
End Bents		1	1100.0	2		1		78.77				9,784			1370.3	1319.6
Int. Bents					2	1	1700.0	142.26				16,300				
Totals	1073.70	1	1100.0	2	2	2	1700.0	201.63	331.19	1101.33	553.00	93,238	8475	483.17	1370.3	1319.6

GENERAL NOTES:

Specifications: Mississippi Standard Specifications for Road and Bridge Construction, 2017.

No change of plans will be permitted except by written approval of the Director of Structures, State Bridge Engineer. Minor changes in detail of design or construction procedure may be authorized by the Director of Structures, State Bridge Engineer provided such changes will not be cause for contract price adjustment.

The final surface texture of the bridge deck shall be mechanically transverse grooved in accordance with Sections 501 and 804 of the specifications. See Misc. Span Details for limits of transverse grooving on bridge deck.

Bridge concrete shall be class "AA" or "BD" as indicated on the plans.

Railing expansion joint material shall be bituminous fiber type unless otherwise noted.

No payment will be allowed for excavation incidental to the construction of end bents.

Bar bending details shall be in accordance with "Manual of Standard Practice for Detailing Reinforced Concrete Structures" (ACI 315R-94).

Reinforcement order lists and required placing plans shall be furnished in accordance with Section 805 of the Mississippi Standard Specifications. Partial submittals are not acceptable.

Shop drawings of prestressed beams, including an erection plan, shall be submitted in duplicate to the Director of Structures, State Bridge Engineer for approval prior to the manufacture of beams.

The Fabricator shall provide camber data at release and immediately prior to shipping.

The Contractor shall provide camber data after erection. The Contractor should be aware that the deflection diagram may be modified based on the provided camber data. Therefore, deck grades should be set only after notification from the Director of Structures, State Bridge Engineer.

Concrete surfaces shall receive a Class 2 rubbed or spray finish in accordance with the specifications.

Reinforcing steel shall be ASTM A615, Grade 60, unless otherwise noted.

Work for which no pay item is provided in the proposal will not be paid for directly and compensation therefore will be included in the prices and payments for bid items.

GIRDER DEFLECTION NOTES:

The girder deflection diagrams shown in these plans were prepared and intended for design and estimation purposes only. Actual bridge girder deflections may differ from the deflection diagrams shown in these plans.

It is the Contractor's responsibility to construct the bridge to meet the requirements of the plans and specifications including, but not limited to, the requirements for bridge deck smoothness.

Prior to formwork construction, the Contractor shall submit three (3) copies of a proposed BRIDGE SUPERSTRUCTURE CONSTRUCTION PLAN to the Director of Structures, State Bridge Engineer for review, through the Project Engineer. This submittal shall include all calculations, assumptions and parameters used by the Contractor to determine bridge girder deflections and form grade elevations. This submittal shall also include an erection and construction procedure that addresses the construction means and methodologies used by the Contractor and shall consider effects including, but not limited to, construction phasing, pouring schedules, applied permanent and construction loading, and shall include calculations and details of temporary girder bracing systems used to ensure girder stability and to counter the effects of girder tilt.

After girder erection and prior to deck construction, the Contractor shall submit deck thickness verification calculations for each girder. These calculations shall include a comparison of the erected girder top flange profiles versus the plan deck grade elevations over each girder plus the anticipated girder deflection due to applied permanent dead load and creep.

Three (3) copies of the deck thickness verification calculations and any proposed remediation measures to correct for thin deck areas shall be submitted to the Director of Structures, State Bridge Engineer for review, through the Project Engineer.

The BRIDGE SUPERSTRUCTURE CONSTRUCTION PLAN and the deck thickness verification calculations shall be prepared and stamped by a Mississippi Registered Professional Engineer.

RIPRAP NOTE:

All RipRap and Geotextile fabric shown in the Bridge Plans are included in the Estimated Quantities (Bridge).

Geotextile fabric is required under all RipRap.

PILE HAMMER NOTE:

Steel H-piles shall be driven with a pile hammer capable of generating a rated energy of no more than 66,150 ft-lb of energy.

Steel pipe piles shall be driven with a pile hammer capable of generating a rated energy of no less than 91,000 ft-lb of energy.

GENERAL PILE NOTES:

Test piles shall be driven as permanent piles at the location shown in the PDA TEST PILE SCHEDULE and will be paid for as test piles only.

The Director of Structures, State Bridge Engineer may authorize test piles driven outside the structure limits.

Test piles shall be driven as a continuous operation, to the bearing capacity and the minimum ground penetration shown in the PDA TEST PILE SCHEDULE, unless otherwise directed by the Director of Structures, State Bridge Engineer.

Permanent piles shall be driven to an elevation no higher than the elevation shown in the REQUIRED ULTIMATE PILE BEARING CAPACITY AND MINIMUM TIP ELEVATION SCHEDULE.

The tip elevation of piling, for hydraulic structures, may be determined by scour line.

When feasible, bearing piles shall be driven full length and shall be spliced, only, as approved by the Director of Structures, State Bridge Engineer.

Welding shall be done by the ELECTRIC ARC process. Welders shall be certified and electrodes shall be approved.

When loading tests are required, the maximum test load shall shall be one and one half (1 1/2) times the minimum pile bearing capacity.

Pile hammer leads used for all PDA test piles and PDA restrikes shall be large enough to provide a minimum of 3" of clearance on each side of the pile in order to properly place and protect PDA gages.

PDA test piles shall require a 1 day and 7 day restrike unless otherwise directed by the Engineer.

Pile lengths and driving criteria shall be provided based on the results of the PDA test piles.

The required ultimate pile bearing shown in the REQUIRED ULTIMATE PILE BEARING AND MINIMUM TIP ELEVATION SCHEDULE includes the LRFD resistance factor from PDA of 0.65. Ultimate Bearing Capacities shown include the additional skin friction required to drive through the material above the 100 year scour line.

All H-Piles shall be HP 12X53, A.S.T.M A572 Grade 50

SACRIFICIAL STEEL PIPE PILE NOTES:

All Steel Pipe Piles shall be ASTM A252, Grade 3 (Fy = 45,000 psi).

Steel Pipe Piles are intended to be open ended.

Welding shall comply with ANSI/AWS D1.5 Bridge Welding Code and be performed by a certified welder.

The out of position test pile at Bent 3 shall be driven and the results analyzed by MDOT prior to driving the test pile in Bent 5. Recommended test pile length may be revised for Bent 5 based on the results of test pile at Bent 3.

DESIGN DATA:

Specifications. . . . . A.A.S.H.T.O., L.R.F.D. 7th Edition, 2014 with 2015 & 2016 Interims
Loading. HL-93
Roadway width. . . . . 44'-0" Gutter to gutter
Concrete. . . . . Class "AA" and "BD" (4,000 p.s.i.)

DRAINAGE DATA:

Drainage area. . . . . 108.0 sq. mi.
Total Q25 (U.S.G.S.) . . . . . 2,388 c.f.s.
Effective area . . . . . 1,003 sq. ft.

SEISMIC DESIGN DATA:

Seismic Design Category . . . . . Category B
Site Class Definition . . . . . Site Class C
Importance Category . . . . . Other

REQUIRED ULTIMATE PILE BEARING CAPACITY AND MINIMUM TIP ELEVATION SCHEDULE

Bent No.	Pile Size	Ult. Bearing Tons	Est. Length Feet	Min. Tip Elevation
1	HP 12X53	63	55	273.0
2	24" Dia.	125	50	277.5
3	24" Dia.	125	50	277.5
4	24" Dia.	125	50	276.5
5	24" Dia.	125	50	276.5
6	24" Dia.	125	50	276.5
7	HP 12X53	63	55	272.0

*NOTE: All est. pile lengths were controlled by scour.

PDA Test Pile Schedule

Bent No.	Min. Length Feet	Tip Elevation
1	65	263.0
3*	70	257.5
5	60	266.5
7	65	265.0

*NOTE: Out of position, uncoated, pipe pile located no less than 3 pile diameters and no greater than 5 pile diameters from production pipe piles at Bent 3.

NOTE: PDA test pile results for all bents must be submitted to The Director Of Structures, State Bridge Engineer before permanent pile lengths will be recommended.

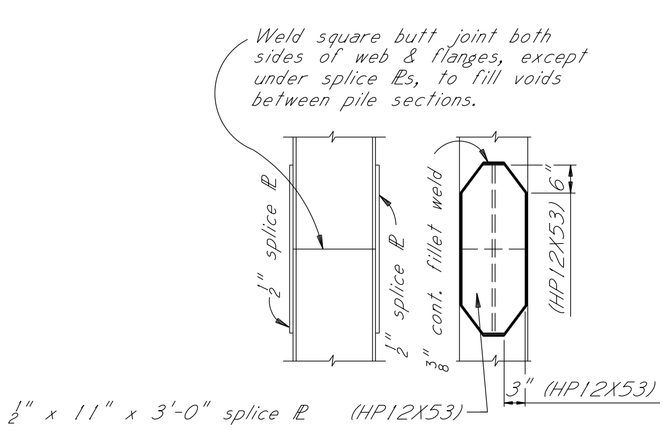

PILE SPLICE DETAIL
HP12X53 steel piles

NOTE: In lieu of splice plates, prefabricated splicers may be used. Prefabricated splicers shall be submitted for approval by the Director of Structures, State Bridge Engineer.

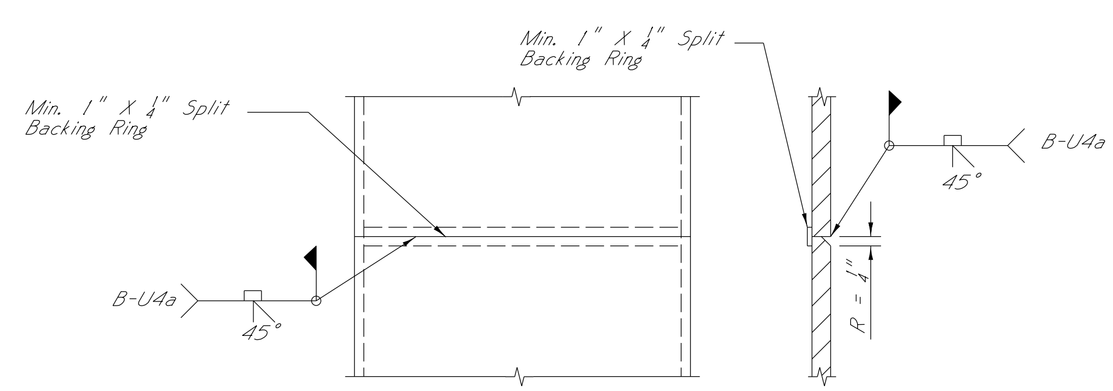

PIPE PILE SPLICE DETAIL
24" Diam. Steel Pipe Piles

JOHN STEVEN WEBB
LICENSED PROFESSIONAL ENGINEER
28545
STATE OF MISSISSIPPI
DATE:09/17/2018

DATE	REVISIONS	BY
9/17/18	SPECIAL PROVISION REMOVED	C.JR
9/14/18	REVISED NOTE	C.JR

MISSISSIPPI DEPARTMENT OF TRANSPORTATION
BRIDGE AT STA. 840+89.21
S.R. 309 OVER PIGEON ROOST CREEK AT L.M. 8.7
GENERAL NOTES & EST. QUANTITIES

PROJECT 100299/302000
BR-0914-00(008)

MARSHALL COUNTY

WORKING NUMBER C1 OF 17

DESIGNER KSM CHECKER JSW
DETAILER RCP ISSUE DATE 09/27/2017
DIRECTOR OF STRUCTURES, STATE BRIDGE ENGINEER - JUSTIN WALKER, P.E.
DEP. DIR. OF STRUCTURES, ASST. STATE BRIDGE ENGINEER - SCOTT WESTERFIELD, P.E.

SHEET NUMBER 8050

ADDENDUM

STATE	PROJECT NO.
MISS.	BR-0914-00(008)

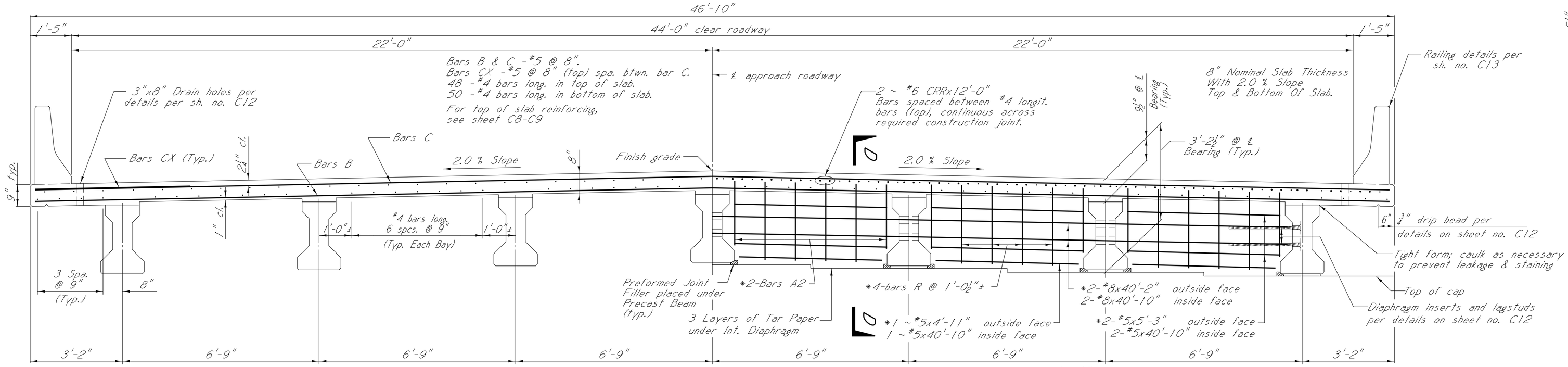

PART SECTION NEAR MIDSPAN

PART SECTION NEAR 1'-1½" INT. DIAPHRAGM

*NOTE: Typical each bay

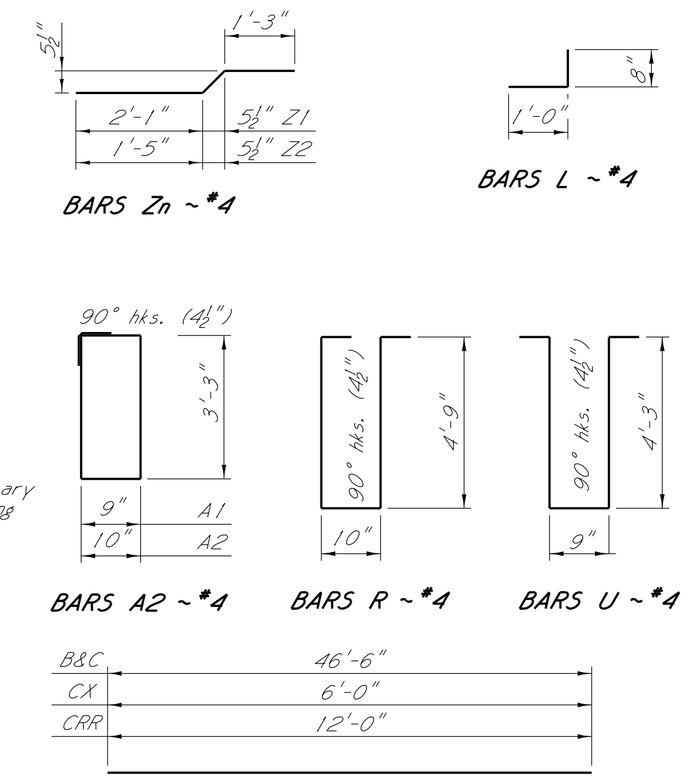

BAR BENDING DETAILS

Dimensions are out to out

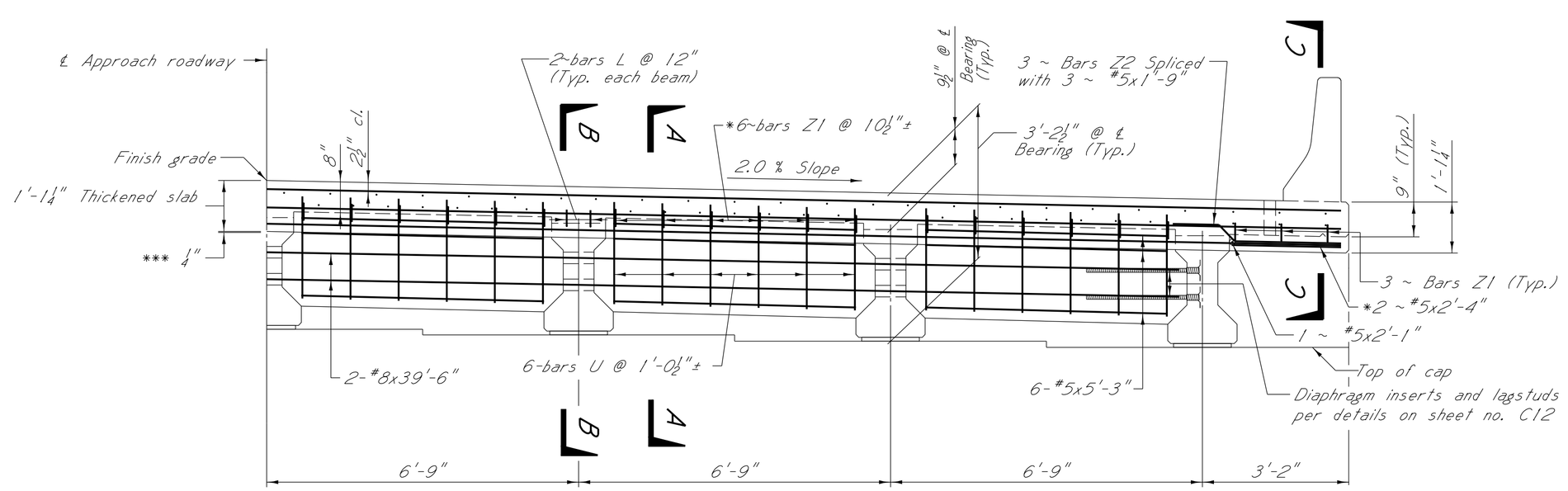

PART SECTION NEAR BRIDGE END

*NOTE: Typical each bay

***NOTE: ¼" Neoprene pad along top of backwall with 2 layers of tar paper on top of pad.

NOTE:

For GENERAL NOTES, railing details and other typical span details see sheets no. C12 & C13.

All concrete in diaphragms, deck, and bridge rail shall be Class "BD"

Any additional concrete and steel required in the fillet resulting from an unexpected camber in the beam will not be directly paid for and shall be considered an absorbed item.

1 2 The volume of concrete in the fillets between the bottom of the nominal slab and the top of the beam has been estimated by using one half (1/2) of the fillet height, at the bearing, multiplied by the top flange width and the full length of the beam. This volume shall be used for final pay quantity.

Insure that holes in beam webs are completely filled with diaphragm concrete.

1 CRR (Corrosion Resistant Reinforcement) bars shall be provided and paid for in accordance with Section 805.

DESIGN DATA:

Specifications. . . . . A.A.S.H.T.O. L.R.F.D. 7th Edition, 2014 with 2015 & 2016 Interims
Concrete. . . . . Class "BD" (4,000 psi)
Loading. HL-93
Prestressed beam details. . . See sheet no. C14-C15

JOHN STEVEN WESTER — LICENSED PROFESSIONAL ENGINEER 26545 — STATE OF MISSISSIPPI

DATE:09/17/2018

DATE	REVISIONS	BY
9/17/18	REVISED NOTE	CJR
9/14/18	REVISED NOTE	CJR

MISSISSIPPI DEPARTMENT OF TRANSPORTATION
BRIDGE AT STA. 840+89.21

SPAN DETAILS SPANS (1 THRU 6)

PROJECT 100299/302000
BR-0914-00(008)

MARSHALL COUNTY

DESIGNER KSM CHECKER JSW
DETAILER RCP ISSUE DATE 09/27/2017
DIRECTOR OF STRUCTURES, STATE BRIDGE ENGINEER - JUSTIN WALKER, P.E.
DEP. DIR. OF STRUCTURES, ASST. STATE BRIDGE ENGINEER - SCOTT WESTERFIELD, P.E.

WORKING NUMBER C10 OF 17

SHEET NUMBER 8059

2 1

ADDENDUM

STATE	PROJECT NO.
MISS.	BR-0914-00(008)

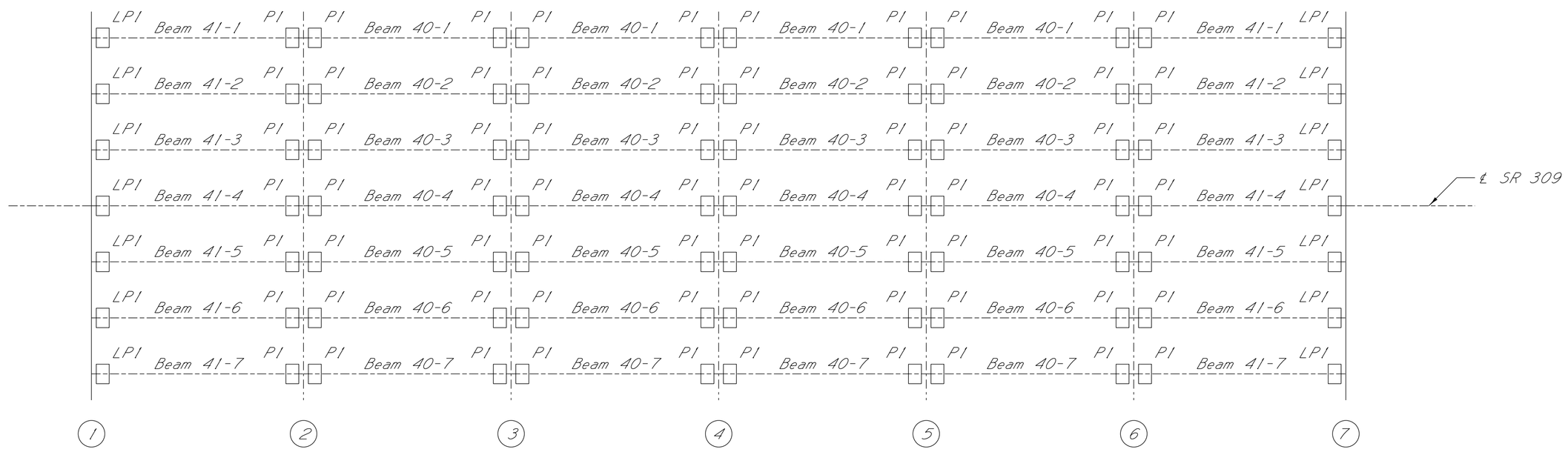

BEAM & BEARING PAD LAYOUT

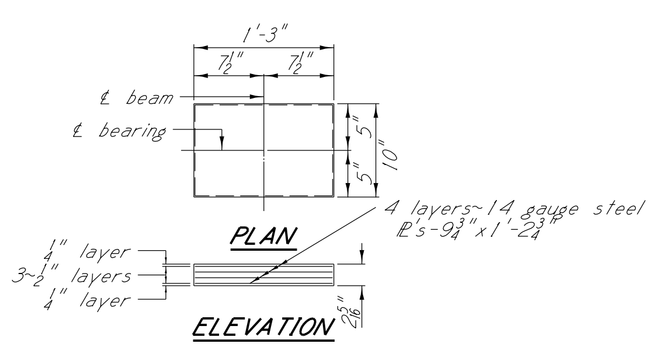

LAMINATED NEOPRENE PAD DETAIL - LP1

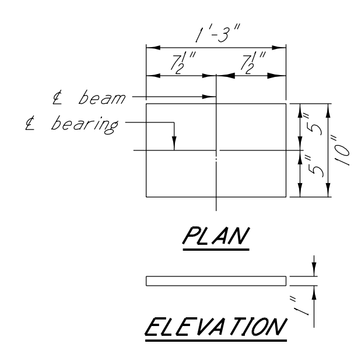

NEOPRENE PAD DETAIL - P1

NOTES:

In no case shall neoprene pads be field cut. Bearing area on top of cap shall be cast smooth and true to grade.

△1 All structural steel shall be ASTM Grade 36 or ASTM Grade 50.

Elastomer for the laminated neoprene pads shall have a hardness of 50 durometer with a minimum shear modulus at 73℉ of 0.095 k.s.i. and a maximum shear modulus at 73℉ of 0.130 k.s.i.

Elastomer for the plain neoprene pads shall have a hardness of 70 durometer in accordance with section 714.10.2 of the specification. The plain neoprene pad shall have a minimum shear modulus at 73℉ of 0.200 k.s.i. and a maximum shear modulus at 73℉ of 0.300 k.s.i.

Testing acceptance procedure shall be in accordance with section 714.10.6 of the Specifications.

To determine the dimension from the finish grade to cap, the assumption is made that the compressed thickness of the neoprene pad is $\frac{1}{16}$" less than the original thickness and that the original camber of the beams will be within the limits shown on the beam detail sheets. The director of structures, state bridge engineer shall be notified if the camber is not within these limits.

JOHN STEVEN WEBBS
LICENSED PROFESSIONAL
ENGINEER
26545
STATE OF MISSISSIPPI
DATE:09/14/2018

DATE	REVISIONS	BY
9/14/18	REVISED NOTE	CJR

MISSISSIPPI DEPARTMENT OF TRANSPORTATION
BRIDGE AT STA. 840+89.21

BEARING PAD LAYOUT & DETAILS

PROJECT 100299/302000
BR-0914-00(008)

MARSHALL COUNTY

DESIGNER KSM CHECKER JSW
DETAILER RCP ISSUE DATE 09/27/2017
DIRECTOR OF STRUCTURES, STATE BRIDGE ENGINEER - JUSTIN WALKER, P.E.
DEP. DIR. OF STRUCTURES, ASST. STATE BRIDGE ENGINEER - SCOTT WESTERFIELD, P.E.

WORKING NUMBER C16 OF 17

SHEET NUMBER 8065

△1

ADDENDUM

STATE	PROJECT NO.
MISS.	BR-0914-00(008)

ESTIMATED QUANTITIES - S.R. 309 OVER RED BANKS TRIB. - BRIDGE AT STA. 98+78.70

Item / Location	Transverse Grooving S.Y.	Conventional Static Pile Load Test Each	HP14X89 Steel Piling L.F.	PDA Test, HP Steel Pile Each	PDA Test, Steel Pipe Pile Each	Pile Restrike Each	30" Steel Pipe Pile L.F.	Bridge Concrete Class "AA" C.Y.	Bridge Concrete Class "BD" C.Y.	138 FT. Prestressed Concrete Beam Type BT-72 L.F.	81 FT. Prestressed Concrete Beam Type III L.F.	Reinforcement Lbs.	Reinforcement, Corrosion Resistant Lbs.	Concrete Railing, 32" L.F.	Loose Riprap Size 300 Ton	Geotextile Under Riprap S.Y.
Spans	1336.02								414.61	960.17	1111.83	70,213	3390	601.21		
End Bents		1	2410.0	1		1		101.22				15,928			1723.0	1451.3
Int. Bents					1	1	1050.0	88.08				11,446			1176.1	868.4
Totals	1336.02	1	2410.0	1	1	2	1050.0	189.30	414.61	960.17	1111.83	97,587	3390	601.21	2899.1	2319.7

GENERAL NOTES:

Specifications: Mississippi Standard Specifications for Road and Bridge Construction, 2017.

No change of plans will be permitted except by written approval of the Director of Structures, State Bridge Engineer. Minor changes in detail of design or construction procedure may be authorized by the Director of Structures, State Bridge Engineer provided such changes will not be cause for contract price adjustment.

The final surface texture of the bridge deck shall be mechanically transverse grooved in accordance with Sections 501 and 804 of the specifications. See Misc. Span Details for limits of transverse grooving on bridge deck.

Bridge concrete shall be class "AA" or "BD" as indicated on the plans.

Railing expansion joint material shall be bituminous fiber type unless otherwise noted.

No payment will be allowed for excavation incidental to the construction of end bents.

Bar bending details shall be in accordance with "Manual of Standard Practice for Detailing Reinforced Concrete Structures" (ACI 315R-94).

Reinforcement order lists and required placing plans shall be furnished in accordance with Section 805 of the Mississippi Standard Specifications. Partial submittals are not acceptable.

Shop drawings of prestressed beams, including an erection plan, shall be submitted in duplicate to the Director of Structures, State Bridge Engineer for approval prior to the manufacture of beams.

The Fabricator shall provide camber data at release and immediately prior to shipping.

The Contractor shall provide camber data after erection. The Contractor should be aware that the deflection diagram may be modified based on the provided camber data. Therefore, deck grades should be set only after notification from the Director of Structures, State Bridge Engineer.

Concrete surfaces shall receive a Class 2 rubbed or spray finish in accordance with the specifications.

Reinforcing steel shall be ASTM A615, Grade 60, unless otherwise noted.

Work for which no pay item is provided in the proposal will not be paid for directly and compensation therefore will be included in the prices and payments for bid items.

GIRDER DEFLECTION NOTES:

The girder deflection diagrams shown in these plans were prepared and intended for design and estimation purposes only. Actual bridge girder deflections may differ from the deflection diagrams shown in these plans.

It is the Contractor's responsibility to construct the bridge to meet the requirements of the plans and specifications including, but not limited to, the requirements for bridge deck smoothness.

Prior to formwork construction, the Contractor shall submit three (3) copies of a proposed BRIDGE SUPERSTRUCTURE CONSTRUCTION PLAN to the Director of Structures, State Bridge Engineer for review, through the Project Engineer. This submittal shall include all calculations, assumptions and parameters used by the Contractor to determine bridge girder deflections and form grade elevations. This submittal shall also include an erection and construction procedure that addresses the construction means and methodologies used by the Contractor and shall consider effects including, but not limited to, construction phasing, pouring schedules, applied permanent and construction loading, and shall include calculations and details of temporary girder bracing systems used to ensure girder stability and to counter the effects of girder tilt.

After girder erection and prior to deck construction, the Contractor shall submit deck thickness verification calculations for each girder. These calculations shall include a comparison of the erected girder top flange profiles versus the plan deck grade elevations over each girder plus the anticipated girder deflection due to applied permanent dead load and creep.

Three (3) copies of the deck thickness verification calculations and any proposed remediation measures to correct for thin deck areas shall be submitted to the Director of Structures, State Bridge Engineer for review, through the Project Engineer.

The BRIDGE SUPERSTRUCTURE CONSTRUCTION PLAN and the deck thickness verification calculations shall be prepared and stamped by a Mississippi Registered Professional Engineer.

RIPRAP NOTE:

All RipRap and Geotextile fabric shown in the Bridge Plans are included in the Estimated Quantities (Bridge).

Geotextile fabric is required under all RipRap.

PILE HAMMER NOTE:

Steel H-piles shall be driven with a pile hammer capable of generating a rated energy of no more than 66,150 ft-lb of energy.

Steel pipe piles shall be driven with a pile hammer capable of generating a rated energy of no less than 91,000 ft-lb of energy.

GENERAL PILE NOTES:

Test piles shall be driven as permanent piles at the location shown in the PDA TEST PILE SCHEDULE and will be paid for as test piles only.

The Director of Structures, State Bridge Engineer may authorize test piles driven outside the structure limits.

Test piles shall be driven as a continuous operation, to the bearing capacity and the minimum ground penetration shown in the PDA TEST PILE SCHEDULE, unless otherwise directed by the Director of Structures, State Bridge Engineer.

Permanent piles shall be driven to an elevation no higher than the elevation shown in the REQUIRED ULTIMATE PILE BEARING CAPACITY AND MINIMUM TIP ELEVATION SCHEDULE.

The tip elevation of piling, for hydraulic structures, may be determined by scour line.

When feasible, bearing piles shall be driven full length and shall be spliced, only, as approved by the Director of Structures, State Bridge Engineer.

Welding shall be done by the ELECTRIC ARC process. Welders shall be certified and electrodes shall be approved.

When loading tests are required, the maximum test load shall shall be one and one half (1 1/2) times the minimum pile bearing capacity.

Pile hammer leads used for all PDA test piles and PDA restrikes shall be large enough to provide a minimum of 3" of clearance on each side of the pile in order to properly place and protect PDA gages.

PDA test piles shall require a 1 day and 7 day restrike unless otherwise directed by the Engineer.

Pile lengths and driving criteria shall be provided based on the results of the PDA test piles.

The required ultimate pile bearing shown in the REQUIRED ULTIMATE PILE BEARING AND MINIMUM TIP ELEVATION SCHEDULE includes the LRFD resistance factor from PDA of 0.65. Ultimate Bearing Capacities shown include the additional skin friction required to drive through the material above the 100 year scour line.

All H-Piles shall be HP 14X89, A.S.T.M A572 Grade 50

SACRIFICIAL STEEL PIPE PILE NOTES:

All Steel Pipe Piles shall be ASTM A252, Grade 3 (Fy = 45,000 psi).

Steel Pipe Piles are intended to be open ended.

Welding shall comply with ANSI/AWS D1.5 Bridge Welding Code and be performed by a certified welder.

The out of position test pile at Bent 3 shall be driven and the results analyzed by MDOT prior to driving the test pile in Bent 1. Recommended test pile length may be revised for Bent 1 based on the results of test pile at Bent 3.

DESIGN DATA:

Specifications. . . . . A.A.S.H.T.O., L.R.F.D. 7th Edition, 2014 with 2015 & 2016 Interims
Loading. HL-93
Roadway width. . . . . 44'-0" Gutter to gutter
Concrete. . . . . Class "AA" and "BD" (4,000 p.s.i.)

DRAINAGE DATA:

Drainage area. . . . . 28.8 sq. mi.
Total Q25 (U.S.G.S.) . . . . . 1,406 c.f.s.
Effective area . . . . . 871 sq. ft.

SEISMIC DESIGN DATA:

Seismic Design Category . . . . . Category B
Site Class Definition . . . . . Site Class C
Importance Category . . . . . Other

REQUIRED ULTIMATE PILE BEARING CAPACITY AND MINIMUM TIP ELEVATION SCHEDULE

Bent No.	Pile Size	Ult. Bearing Tons	Est. Length Feet	Min. Tip Elevation
1	HP 14X89	90	60	278.0
2	30" Dia.	255	75	260.0
3	30" Dia.	255	75	261.0
4	HP 14X89	90	70	270.0

*NOTE: All est. pile lengths were controlled by scour.

PDA Test Pile Schedule

Bent No.	Min. Length Feet	Tip Elevation
1	70	268.0
3*	95	241.0

*NOTE: Out of position, uncoated, pipe pile located no less than 3 pile diameters and no greater than 5 pile diameters from production pipe piles at Bent 3.

NOTE: PDA test pile results for all bents must be submitted to The Director Of Structures, State Bridge Engineer before permanent pile lengths will be recommended.

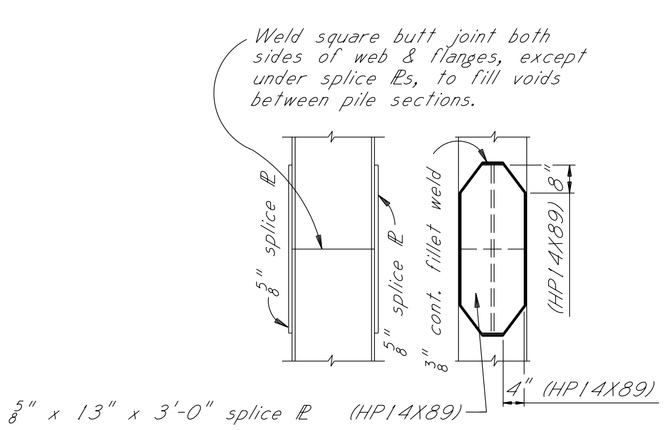

PILE SPLICE DETAIL

HP14X89 steel piles

NOTE: In lieu of splice plates, prefabricated splicers may be used. Prefabricated splicers shall be submitted for approval by the Director of Structures, State Bridge Engineer.

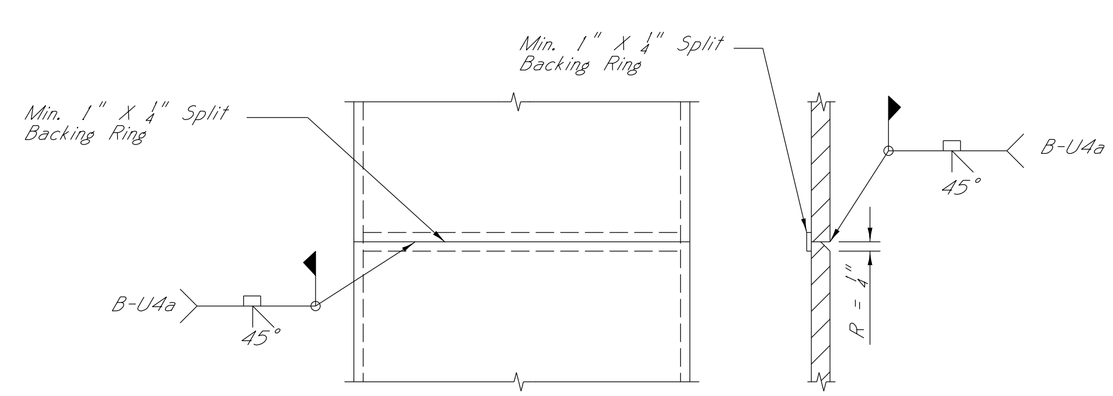

PIPE PILE SPLICE DETAIL

30" Diam. Steel Pipe Piles

1
2

JOHN STEVEN WEBBS
LICENSED PROFESSIONAL ENGINEER
28545
STATE OF MISSISSIPPI
DATE:09/17/2018

DATE	BY	REVISIONS
9/17/18	C.JR	SPECIAL PROVISION REMOVED
9/14/18	C.JR	REVISED NOTE

MISSISSIPPI DEPARTMENT OF TRANSPORTATION
BRIDGE AT STA. 98+78.70
S.R. 309 OVER RED BANKS
TRIBUTARY AT L.M. 12.8
GENERAL NOTES & EST. QUANTITIES

PROJECT 100299/302000
BR-0914-00(008)

MARSHALL COUNTY

WORKING NUMBER D1 OF 20

DESIGNER KSM CHECKER JSW
DETAILER RCP ISSUE DATE 09/27/2017

DIRECTOR OF STRUCTURES, STATE BRIDGE ENGINEER - JUSTIN WALKER, P.E.
DEP. DIR. OF STRUCTURES, ASST. STATE BRIDGE ENGINEER - SCOTT WESTERFIELD, P.E.

SHEET NUMBER 8067

2 1

ADDENDUM

STATE	PROJECT NO.
MISS.	BR-0914-00(008)

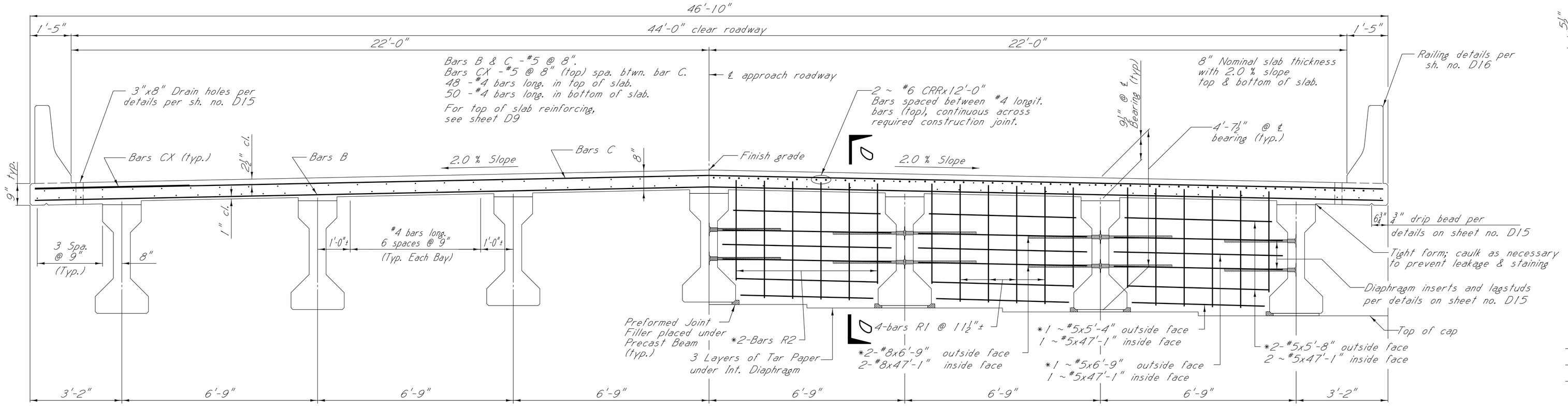

PART SECTION NEAR MIDSPAN

PART SECTION NEAR 1'-1½" INT. DIAPHRAGM

*NOTE: Typical each bay

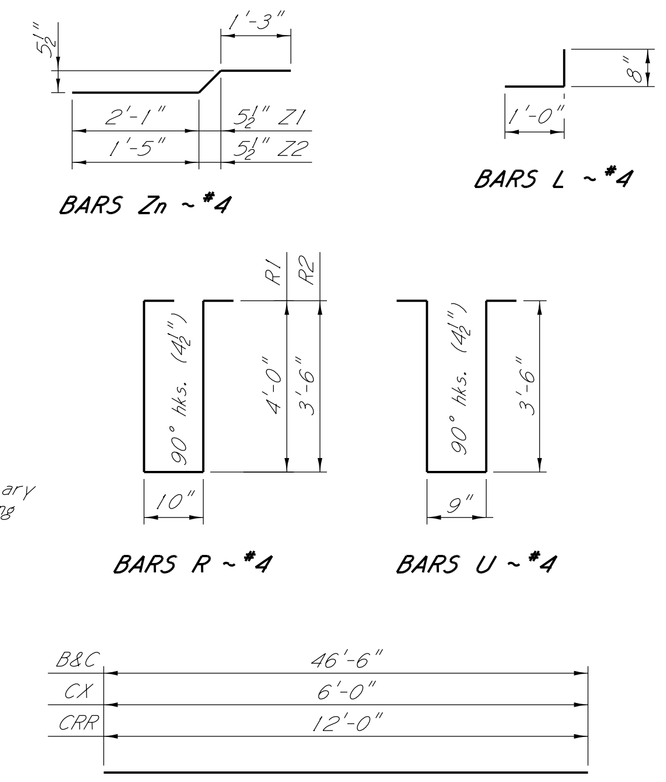

BAR BENDING DETAILS

Dimensions are out to out

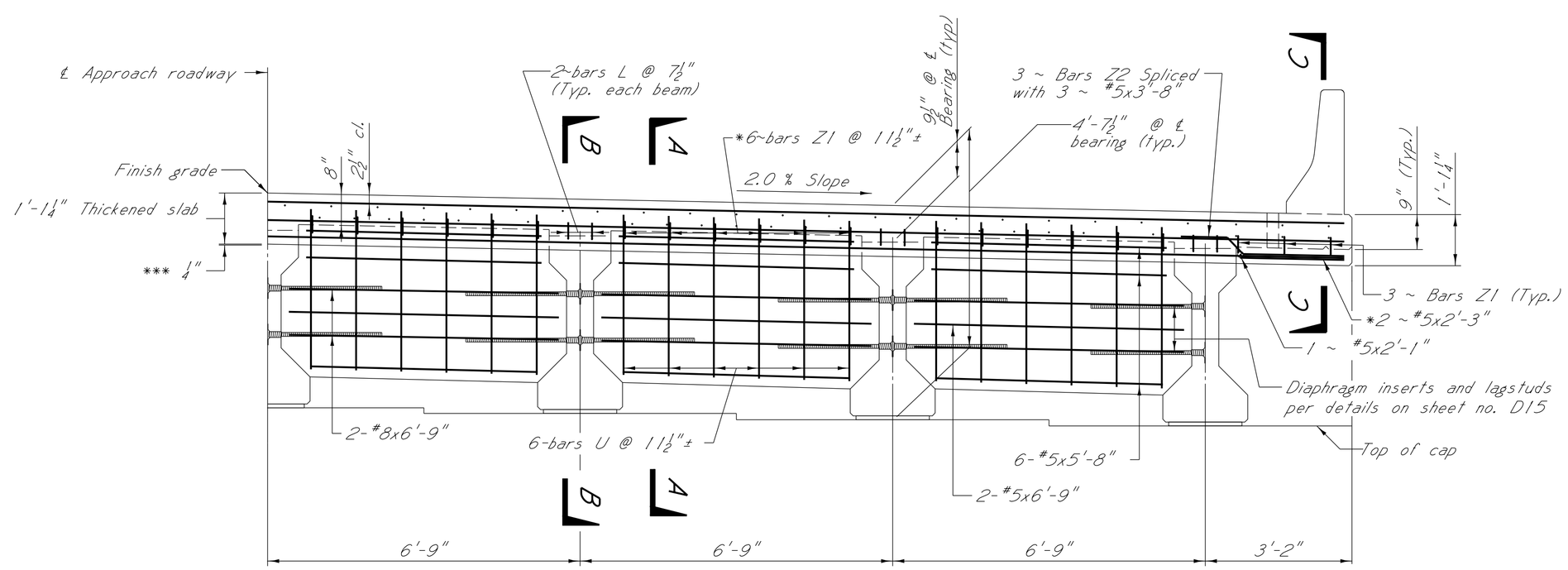

PART SECTION NEAR BRIDGE END

*NOTE: Typical each bay

***NOTE: ¼" Neoprene pad along top of backwall with 2 layers of tar paper on top of pad.

NOTE:

For GENERAL NOTES, railing details and other typical span details see sheets no. D15 & D16.

All concrete in diaphragms, deck, and bridge rail shall be Class "BD"

Any additional concrete and steel required in the fillet resulting from an unexpected camber in the beam will not be directly paid for and shall be considered an absorbed item.

△2 The volume of concrete in the fillets between the bottom of the nominal slab and the top of the beam has been estimated by using one half (1/2) of the fillet height, at the bearing, multiplied by the top flange width and the full length of the beam. This volume shall be used for final pay quantity.

Insure that holes in beam webs are completely filled with diaphragm concrete.

△1 CRR (Corrosion Resistant Reinforcement) bars shall be provided and paid for in accordance with Section 805.

DESIGN DATA:

Specifications. . . . . A.A.S.H.T.O. L.R.F.D. 7th Edition, 2014 with 2015 & 2016 Interims
Concrete. . . . . Class "BD" (4,000 psi)
Loading. HL-93
Prestressed beam details. . . See sheet no. D17

JOHN STEVEN WEBBS LICENSED PROFESSIONAL ENGINEER 26545 STATE OF MISSISSIPPI

DATE:09/17/2018

DATE	REVISIONS	BY
9/17/18	REVISED NOTE	CJR
9/14/18	REVISED NOTE	CJR

MISSISSIPPI DEPARTMENT OF TRANSPORTATION
BRIDGE AT STA. 98+78.70

SPAN DETAILS SPANS (1 & 3)

PROJECT 100299/302000
BR-0914-00(008)

MARSHALL COUNTY

DESIGNER KSM CHECKER JSW
DETAILER RCP ISSUE DATE 09/27/2017
DIRECTOR OF STRUCTURES, STATE BRIDGE ENGINEER - JUSTIN WALKER, P.E.
DEP. DIR. OF STRUCTURES, ASST. STATE BRIDGE ENGINEER - SCOTT WESTERFIELD, P.E.

WORKING NUMBER D10 OF 20

SHEET NUMBER 8076

△2 △1

ADDENDUM

STATE	PROJECT NO.
MISS.	BR-0914-00(008)

BEAM & BEARING PAD LAYOUT

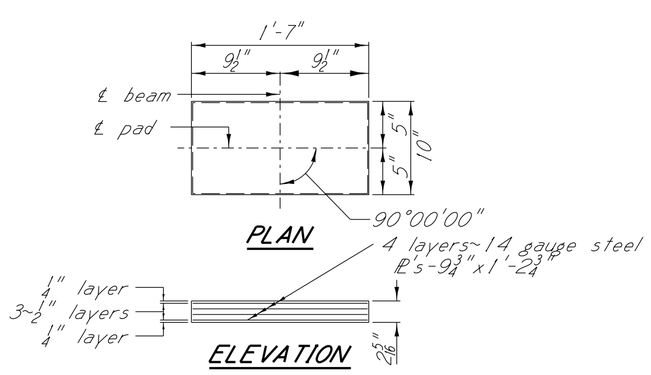

LAMINATED NEOPRENE PAD DETAIL - LP1

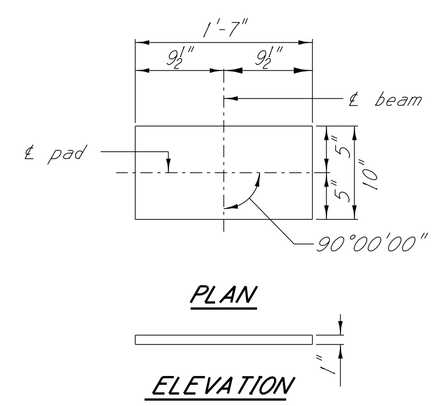

NEOPRENE PAD DETAIL - P1

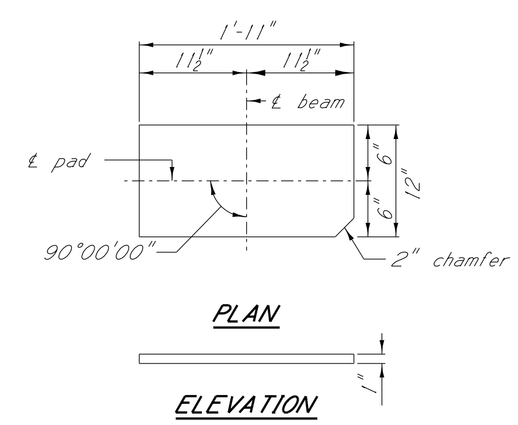

NEOPRENE PAD DETAIL - P2

NOTES:

In no case shall neoprene pads be field cut. Bearing area on top of cap shall be cast smooth and true to grade.

1 All structural steel shall be ASTM Grade 36 or ASTM Grade 50.

Elastomer for the laminated neoprene pads shall have a hardness of 50 durometer with a minimum shear modulus at 73℉ of 0.095 k.s.i. and a maximum shear modulus at 73℉ of 0.130 k.s.i.

Elastomer for the plain neoprene pads shall have a hardness of 70 durometer in accordance with section 714.10.2 of the specification. The plain neoprene pad shall have a minimum shear modulus at 73℉ of 0.200 k.s.i. and a maximum shear modulus at 73℉ of 0.300 k.s.i.

Testing acceptance procedure shall be in accordance with section 714.10.6 of the Specifications.

To determine the dimension from the finish grade to cap, the assumption is made that the compressed thickness of the neoprene pad is $\frac{1}{16}$" less than the original thickness and that the original camber of the beams will be within the limits shown on the beam detail sheets. The Director of Structures, State Bridge Engineer shall be notified if the camber is not within these limits.

JOHN STEVEN WEBER
LICENSED PROFESSIONAL ENGINEER
26545
STATE OF MISSISSIPPI
DATE:09/14/2018

DATE	REVISIONS	BY
9/14/18	REVISED NOTE	CJR

MISSISSIPPI DEPARTMENT OF TRANSPORTATION
BRIDGE AT STA. 98+78.70

BEARING PAD LAYOUT & DETAILS

PROJECT 100299/302000
BR-0914-00(008)

MARSHALL COUNTY

WORKING NUMBER D19 OF 20

DESIGNER KSM CHECKER JSW
DETAILER RCP ISSUE DATE 09/27/2017
DIRECTOR OF STRUCTURES, STATE BRIDGE ENGINEER - JUSTIN WALKER, P.E.
DEP. DIR. OF STRUCTURES, ASST. STATE BRIDGE ENGINEER - SCOTT WESTERFIELD, P.E.

SHEET NUMBER 8085

1

ADDENDUM

STATE	PROJECT NO.
MISS.	BR-0914-00(008)

ESTIMATED QUANTITIES - S.R. 309 OVER RED BANKS CREEK - BRIDGE AT STA. 109+73.76

Item / Location	Transverse Grooving	Conventional Static Pile Load Test	HP14X89 Steel Piling	PDA Test, HP Steel Pile	PDA Test, Steel Pipe Pile	Pile Restrike	30" Steel Pipe Pile	Bridge Concrete Class "AA"	Bridge Concrete Class "BD"	130 FT. Prestressed Concrete Beam Type BT-72	95 FT. Prestressed Concrete Beam Type BT-54	96 FT. Prestressed Concrete Beam Type BT-54	Reinforcement	Reinforcement, Corrosion Resistant	Concrete Railing, 32"	Loose Riprap Size 300	Geotextile Under Riprap
	S.Y.	Each	L.F.	Each	Each	Each	L.F.	C.Y.	C.Y.	L.F.	L.F.	L.F.	Lbs.	Lbs.	L.F.	Ton	S.Y.
Spans	2277.78								714.48	904.75	1319.50	1321.83	126,008	6780	1025.00		
End Bents		1	2310.0	1		1		102.49					15,250			1472.2	1183.2
Int. Bents					2	1	2265.0	146.25					21,654				
Totals	2277.78	1	2310.0	1	2	2	2265.0	248.74	714.48	904.75	1319.50	1321.83	162,912	6780	1025.00	1472.2	1183.2

GENERAL NOTES:

Specifications: Mississippi Standard Specifications for Road and Bridge Construction, 2017.

No change of plans will be permitted except by written approval of the Director of Structures, State Bridge Engineer. Minor changes in detail of design or construction procedure may be authorized by the Director of Structures, State Bridge Engineer provided such changes will not be cause for contract price adjustment.

The final surface texture of the bridge deck shall be mechanically transverse grooved in accordance with Sections 501 and 804 of the specifications. See Misc. Span Details for limits of transverse grooving on bridge deck.

Bridge concrete shall be class "AA" or "BD" as indicated on the plans.

Railing expansion joint material shall be bituminous fiber type unless otherwise noted.

No payment will be allowed for excavation incidental to the construction of end bents.

Bar bending details shall be in accordance with "Manual of Standard Practice for Detailing Reinforced Concrete Structures" (ACI 315R-94).

Reinforcement order lists and required placing plans shall be furnished in accordance with Section 805 of the Mississippi Standard Specifications. Partial submittals are not acceptable.

Shop drawings of prestressed beams, including an erection plan, shall be submitted in duplicate to the Director of Structures, State Bridge Engineer for approval prior to the manufacture of beams.

The Fabricator shall provide camber data at release and immediately prior to shipping.

The Contractor shall provide camber data after erection. The Contractor should be aware that the deflection diagram may be modified based on the provided camber data. Therefore, deck grades should be set only after notification from the Director of Structures, State Bridge Engineer.

Concrete surfaces shall receive a Class 2 rubbed or spray finish in accordance with the specifications.

Reinforcing steel shall be ASTM A615, Grade 60, unless otherwise noted.

Work for which no pay item is provided in the proposal will not be paid for directly and compensation therefore will be included in the prices and payments for bid items.

GIRDER DEFLECTION NOTES:

The girder deflection diagrams shown in these plans were prepared and intended for design and estimation purposes only. Actual bridge girder deflections may differ from the deflection diagrams shown in these plans.

It is the Contractor's responsibility to construct the bridge to meet the requirements of the plans and specifications including, but not limited to, the requirements for bridge deck smoothness.

Prior to formwork construction, the Contractor shall submit three (3) copies of a proposed BRIDGE SUPERSTRUCTURE CONSTRUCTION PLAN to the Director of Structures, State Bridge Engineer for review, through the Project Engineer. This submittal shall include all calculations, assumptions and parameters used by the Contractor to determine bridge girder deflections and form grade elevations. This submittal shall also include an erection and construction procedure that addresses the construction means and methodologies used by the Contractor and shall consider effects including, but not limited to, construction phasing, pouring schedules, applied permanent and construction loading, and shall include calculations and details of temporary girder bracing systems used to ensure girder stability and to counter the effects of girder tilt.

After girder erection and prior to deck construction, the Contractor shall submit deck thickness verification calculations for each girder. These calculations shall include a comparison of the erected girder top flange profiles versus the plan deck grade elevations over each girder plus the anticipated girder deflection due to applied permanent dead load and creep.

Three (3) copies of the deck thickness verification calculations and any proposed remediation measures to correct for thin deck areas shall be submitted to the Director of Structures, State Bridge Engineer for review, through the Project Engineer.

The BRIDGE SUPERSTRUCTURE CONSTRUCTION PLAN and the deck thickness verification calculations shall be prepared and stamped by a Mississippi Registered Professional Engineer.

RIPRAP NOTE:

All RipRap and Geotextile fabric shown in the Bridge Plans are included in the Estimated Quantities (Bridge).

Geotextile fabric is required under all RipRap.

PILE HAMMER NOTE:

Steel H-piles shall be driven with a pile hammer capable of generating a rated energy of no more than 66,150 ft-lb of energy.

Steel pipe piles shall be driven with a pile hammer capable of generating a rated energy of no less than 91,000 ft-lb of energy.

GENERAL PILE NOTES:

Test piles shall be driven as permanent piles at the location shown in the PDA TEST PILE SCHEDULE and will be paid for as test piles only.

The Director of Structures, State Bridge Engineer may authorize test piles driven outside the structure limits.

Test piles shall be driven as a continuous operation, to the bearing capacity and the minimum ground penetration shown in the PDA TEST PILE SCHEDULE, unless otherwise directed by the Director of Structures, State Bridge Engineer.

Permanent piles shall be driven to an elevation no higher than the elevation shown in the REQUIRED ULTIMATE PILE BEARING CAPACITY AND MINIMUM TIP ELEVATION SCHEDULE.

The tip elevation of piling, for hydraulic structures, may be determined by scour line.

When feasible, bearing piles shall be driven full length and shall be spliced, only, as approved by the Director of Structures, State Bridge Engineer.

Welding shall be done by the ELECTRIC ARC process. Welders shall be certified and electrodes shall be approved.

When loading tests are required, the maximum test load shall shall be one and one half (1 1/2) times the minimum pile bearing capacity.

Pile hammer leads used for all PDA test piles and PDA restrikes shall be large enough to provide a minimum of 3" of clearance on each side of the pile in order to properly place and protect PDA gages.

PDA test piles shall require a 1 day and 7 day restrike unless otherwise directed by the Engineer.

Pile lengths and driving criteria shall be provided based on the results of the PDA test piles.

The required ultimate pile bearing shown in the REQUIRED ULTIMATE PILE BEARING AND MINIMUM TIP ELEVATION SCHEDULE includes the LRFD resistance factor from PDA of 0.65. Ultimate Bearing Capacities shown include the additional skin friction required to drive through the material above the 100 year scour line.

All H-Piles shall be HP 14X89, A.S.T.M A572 Grade 50

SACRIFICIAL STEEL PIPE PILE NOTES:

All Steel Pipe Piles shall be ASTM A252, Grade 3 (Fy = 45,000 psi).

Steel Pipe Piles are intended to be open ended.

Welding shall comply with ANSI/AWS D1.5 Bridge Welding Code and be performed by a certified welder.

The out of position test pile at Bent 4 shall be driven and the results analyzed by MDOT prior to driving the test pile in Bent 2. Recommended test pile length may be revised for Bent 2 based on the results of test pile at Bent 4.

DESIGN DATA:

Specifications. . . . . A.A.S.H.T.O., L.R.F.D. 7th Edition, 2014 with 2015 & 2016 Interims
Loading. HL-93
Roadway width. . . . . 44'-0" Gutter to gutter
Concrete. . . . . Class "AA" and "BD" (4,000 p.s.i.)

DRAINAGE DATA:

Drainage area. . . . . 27.8 sq. mi.
Total Q25 (U.S.G.S.) . . . . . 7,094 c.f.s.
Effective area . . . . . 2,499 sq. ft.

SEISMIC DESIGN DATA:

Seismic Design Category . . . . . Category B
Site Class Definition . . . . . Site Class C
Importance Category . . . . . Other

REQUIRED ULTIMATE PILE BEARING CAPACITY AND MINIMUM TIP ELEVATION SCHEDULE

Bent No.	Pile Size	Ult. Bearing Tons	Est. Length Feet	Min. Tip Elevation
1	HP 14x89	95	60	279.0
2	30" Dia.	275	80	258.0
3	30" Dia.	305	90	246.0
4	30" Dia.	305	90	245.0
5	30" Dia.	275	75	261.0
6	HP 14x89	95	65	271.0

*NOTE: All est. pile lengths were controlled by scour.

PDA Test Pile Schedule

Bent No.	Min. Length Feet	Tip Elevation
2	90	248.0
4 *	110	225.0
6	75	261.0

*NOTE: Out of position, uncoated, pipe pile located no less than 3 pile diameters and no greater than 5 pile diameters from production pipe piles at Bent 4.

NOTE: PDA test pile results for all bents must be submitted to The Director Of Structures, State Bridge Engineer before permanent pile lengths will be recommended.

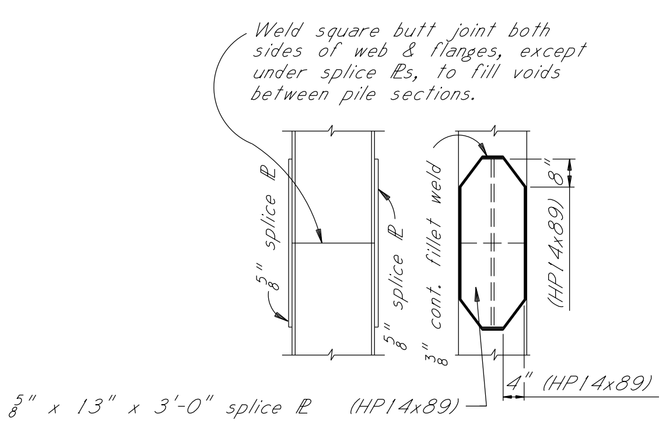

PILE SPLICE DETAIL

HP14x89 steel piles

NOTE: In lieu of splice plates, prefabricated splicers may be used. Prefabricated splicers shall be submitted for approval by the Director of Structures, State Bridge Engineer.

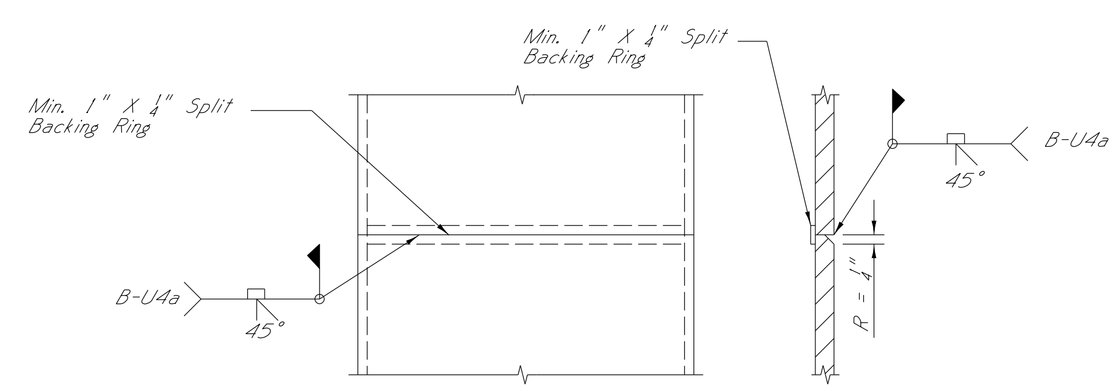

PIPE PILE SPLICE DETAIL

30" Diam. Steel Pipe Piles

1
2

JOHN STEVEN WEBBS
LICENSED PROFESSIONAL ENGINEER
28545
STATE OF MISSISSIPPI

DATE:09/17/2018

DATE	REVISIONS	BY
9/17/18	SPECIAL PROVISION REMOVED	CJR
9/14/18	REVISED NOTE	CJR

MISSISSIPPI DEPARTMENT OF TRANSPORTATION
BRIDGE AT STA. 109+73.76
S.R. 309 OVER RED BANKS CREEK AT L.M. 13.0
GENERAL NOTES & EST. QUANTITIES

PROJECT 100299/302000
BR-0914-00(008)

MARSHALL COUNTY

WORKING NUMBER E1 OF 25

DESIGNER KSM CHECKER JSW
DETAILER RCP ISSUE DATE 09/27/2017

DIRECTOR OF STRUCTURES, STATE BRIDGE ENGINEER - JUSTIN WALKER, P.E.
DEP. DIR. OF STRUCTURES, ASST. STATE BRIDGE ENGINEER - SCOTT WESTERFIELD, P.E.

SHEET NUMBER 8087

2 1

ADDENDUM

STATE	PROJECT NO.
MISS.	BR-0914-00(008)

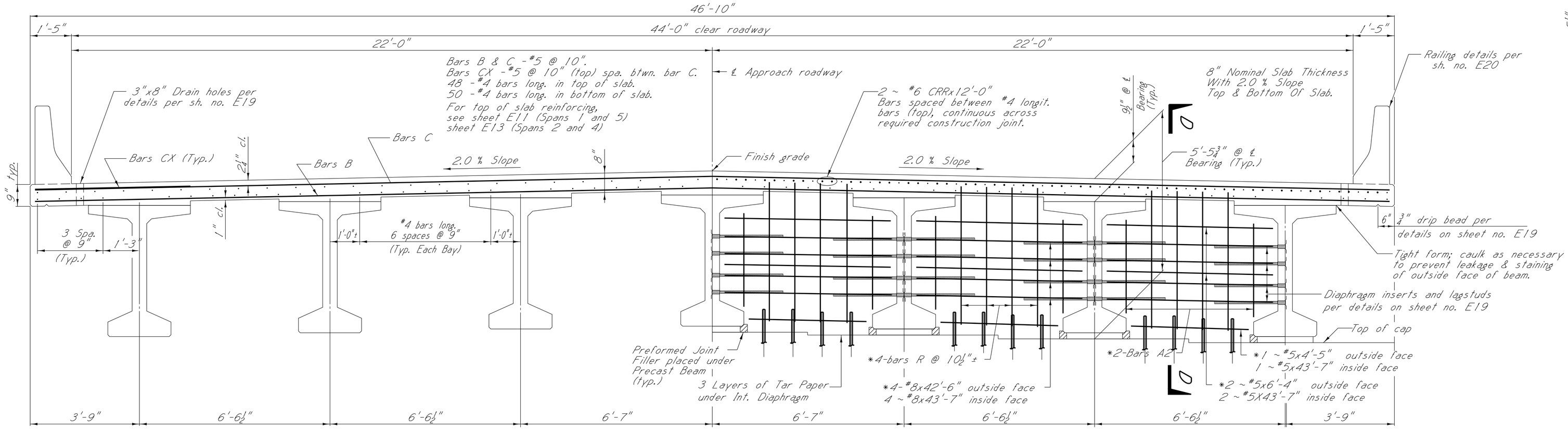

PART SECTION NEAR MIDSPAN

PART SECTION NEAR 1'-1½" INT. DIAPHRAGM

*NOTE: Typical each bay

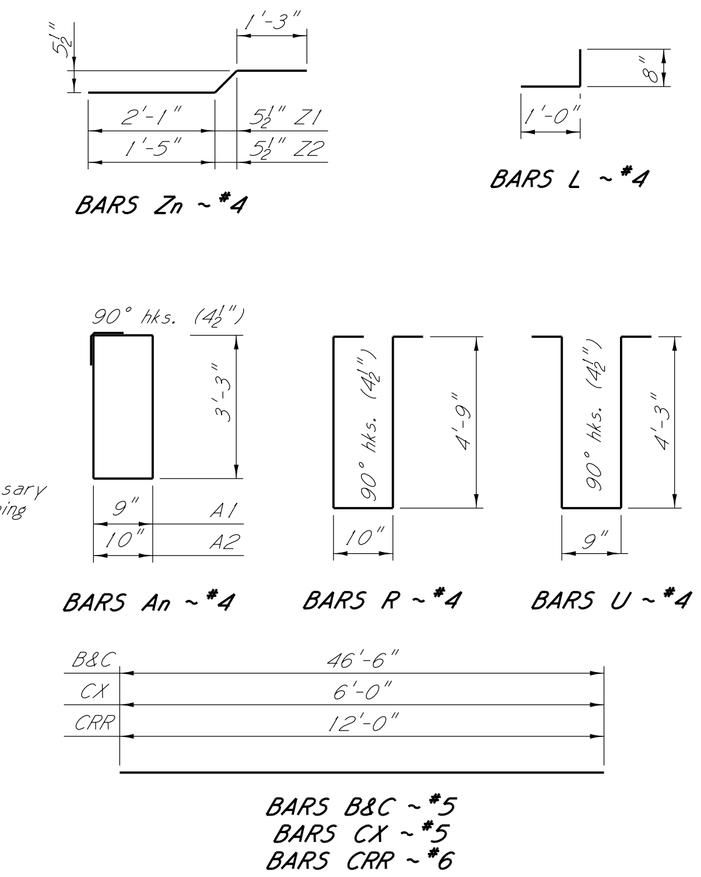

BAR BENDING DETAILS

Dimensions are out to out

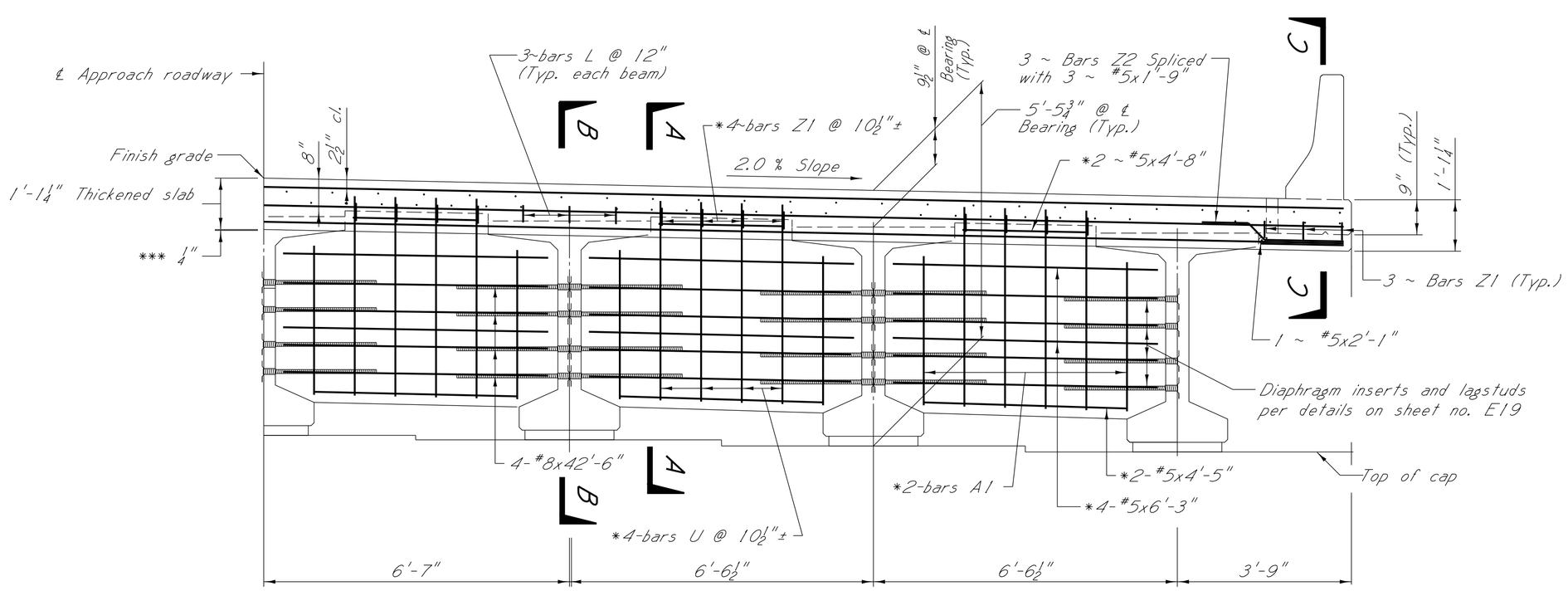

***NOTE: ¼" Neoprene pad along top of backwall with 2 layers of tar paper on top of pad.

PART SECTION NEAR BRIDGE END

*NOTE: Typical each bay

NOTE:

For GENERAL NOTES, railing details and other typical span details see sheets no. E19 & E20.

All concrete in diaphragms, deck, and bridge rail shall be Class "BD"

Any additional concrete and steel required in the fillet resulting from an unexpected camber in the beam will not be directly paid for and shall be considered an absorbed item.

2 1 The volume of concrete in the fillets between the bottom of the nominal slab and the top of the beam has been estimated by using one half (1/2) of the fillet height, at the bearing, multiplied by the top flange width and the full length of the beam. This volume shall be used for final pay quantity.

Insure that holes in beam webs are completely filled with diaphragm concrete.

1 CRR (Corrosion Resistant Reinforcement) bars shall be provided and paid for in accordance with Section 805.

DESIGN DATA:

Specifications. . . . . A.A.S.H.T.O. L.R.F.D. 7th Edition, 2014 with 2015 & 2016 Interims
Concrete. . . . . .Class "BD" (4,000 psi)
Loading. HL-93
Prestressed beam details. . . See sheet no. E21-E23

JOHN STEVEN WEBBS
LICENSED PROFESSIONAL ENGINEER
26545
STATE OF MISSISSIPPI
DATE:09/17/2018

DATE	REVISIONS	BY
9/17/18	REVISED NOTE	CJR
9/14/18	REVISED NOTE	CJR

MISSISSIPPI DEPARTMENT OF TRANSPORTATION
BRIDGE AT STA. 109+73.76

SPAN DETAILS
SPANS (1, 2, 4, & 5)

PROJECT 100299/302000
BR-0914-00(008)

MARSHALL COUNTY

DESIGNER KSM CHECKER JSW
DETAILER RCP ISSUE DATE 09/27/2017
DIRECTOR OF STRUCTURES, STATE BRIDGE ENGINEER - JUSTIN WALKER, P.E.
DEP. DIR. OF STRUCTURES, ASST. STATE BRIDGE ENGINEER - SCOTT WESTERFIELD, P.E.

WORKING NUMBER E14 OF 25

SHEET NUMBER 8100

2 1

ADDENDUM

STATE	PROJECT NO.
MISS.	BR-0914-00(008)

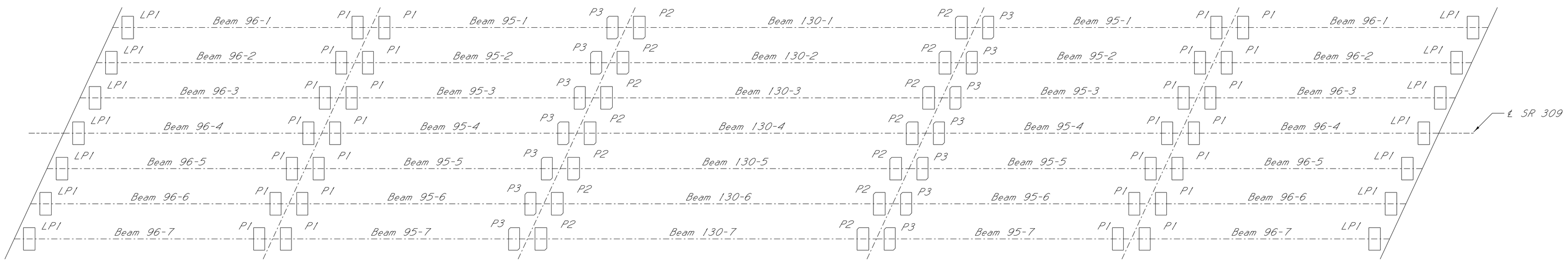

BEAM & BEARING PAD LAYOUT

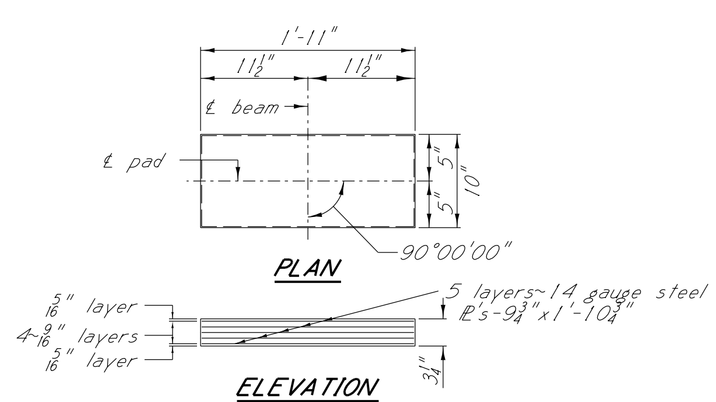

LAMINATED NEOPRENE PAD DETAIL - LP1

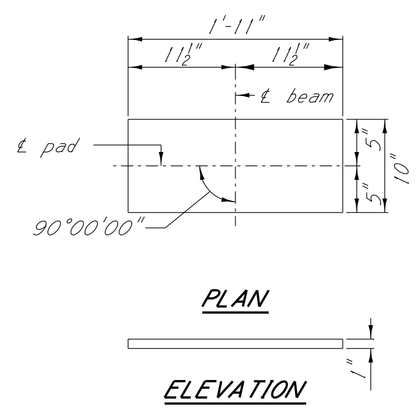

NEOPRENE PAD DETAIL - P1

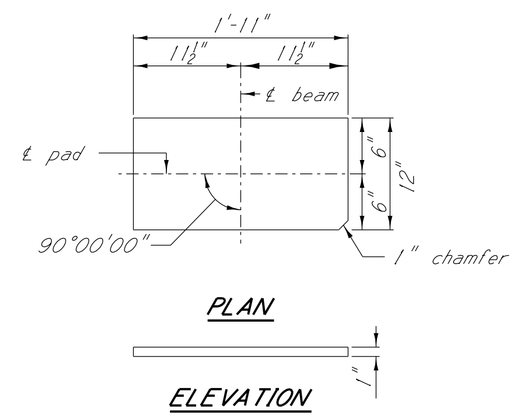

NEOPRENE PAD DETAIL - P2

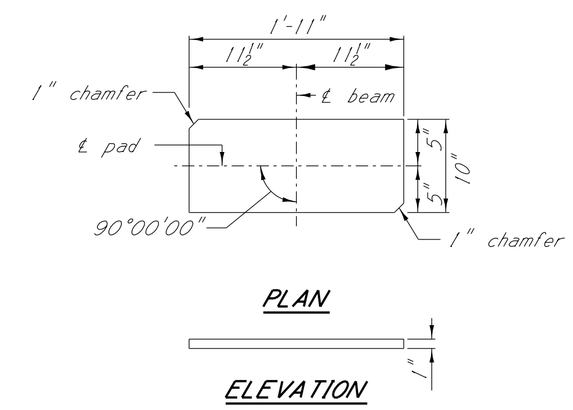

NEOPRENE PAD DETAIL - P3

NOTES:

In no case shall neoprene pads be field cut. Bearing area on top of cap shall be cast smooth and true to grade.

1 All structural steel shall be ASTM Grade 36 or ASTM Grade 50.

Elastomer for the laminated neoprene pads shall have a hardness of 50 durometer with a minimum shear modulus at 73℉ of 0.095 k.s.i. and a maximum shear modulus at 73℉ of 0.130 k.s.i.

Elastomer for the plain neoprene pads shall have a hardness of 70 durometer in accordance with section 714.10.2 of the specification. The plain neoprene pad shall have a minimum shear modulus at 73℉ of 0.200 k.s.i. and a maximum shear modulus at 73℉ of 0.300 k.s.i.

Testing acceptance procedure shall be in accordance with section 714.10.6 of the Specifications.

To determine the dimension from the finish grade to cap, the assumption is made that the compressed thickness of the neoprene pad is 1/16" less than the original thickness and that the original camber of the beams will be within the limits shown on the beam detail sheets. The Director of Structures, State Bridge Engineer shall be notified if the camber is not within these limits.

JOHN STEVEN WESTERFIELD
LICENSED PROFESSIONAL ENGINEER
26545
STATE OF MISSISSIPPI
DATE:09/14/2018

DATE	REVISIONS	BY
9/14/18	REVISED NOTE	CJR

MISSISSIPPI DEPARTMENT OF TRANSPORTATION
BRIDGE AT STA. 109+73.76

BEARING PAD LAYOUT & DETAILS

PROJECT 100299/302000
BR-0914-00(008)

MARSHALL COUNTY

DESIGNER KSM CHECKER JSW
DETAILER RCP ISSUE DATE 09/27/2017
DIRECTOR OF STRUCTURES, STATE BRIDGE ENGINEER - JUSTIN WALKER, P.E.
DEP. DIR. OF STRUCTURES, ASST. STATE BRIDGE ENGINEER - SCOTT WESTERFIELD, P.E.

WORKING NUMBER E24 OF 25

SHEET NUMBER 8110

1