# GULF REGION INTELLIGENT TRANSPORTATION SYSTEM ARCHITECTURE

## MDOT-ITS 002-01-002

***Prepared by:***


**URS Corporation**
**Gresham, Smith and Partners, MS, P.C.**


**March 2007**

# GULF REGION
# INTELLIGENT TRANSPORTATION SYSTEMS ARCHITECTURE

**Version 1.0**

# FINAL DRAFT

Prepared for:

Prepared by:

**URS Corporation**
**Gresham, Smith and Partners, MS, P.C.**

**April 2007**

# *Table of Contents*

**Executive Summary** ..... **iv**

**1. Introduction** ..... **1**

1.1 Vision, Mission, and Goals ..... 2
1.2 Description of the Region ..... 6
1.3 Organization of the Report ..... 8

**2. ITS Architecture Development Process** ..... **11**

2.1 National ITS Architecture ..... 11
2.2 Gulf Region ITS Architecture Development Process ..... 14
2.3 Architecture Development Coordination ..... 16
2.4 Systems Engineering ..... 16
2.5 Requirements of the Final FHWA Rule and FTA Policy on Architecture ..... 17

**3. Stakeholders and Operational Concept** ..... **20**

3.1 Identification of Participating Agencies and Stakeholders ..... 20
3.2 Operational Concept ..... 23

**4. Inventory** ..... **33**

**5. User Services and Market Packages** ..... **50**

5.1 Identification of User Services ..... 50
5.2 Mapping User Services to Market Packages ..... 50
5.3 Customization of Market Packages ..... 55

**6. Subsystems, Equipment Packages and Functional Requirements** ..... **66**

6.1 Mapping of Market Packages to Subsystems and Equipment Packages ..... 66
6.2 Functional Requirements ..... 74

**7. Interconnects and Architecture Flows** ..... **79**

7.1 System Interconnects ..... 79
7.2 Architecture Flows ..... 81

**8. ITS Standards** ..... **87**

8.1 Standards Benefits ..... 87
8.2 Using Standards ..... 89
8.3 Mapping of Standards to Application Areas ..... 90

**9. Project Sequencing** ..... **102**

**10. Agreements** ..... **109**

**11. Implementation and Integration Strategy** ..... **115**

11.1 Using ITS Architecture in Planning and Project Definition ..... 115
11.2 Integration Strategy ..... 120

**12. Architecture Maintenance Plan** ..... **123**

12.1 Introduction ..... 123
12.2 Who Is Responsible for Architecture Maintenance ..... 124
12.3 What Will Be Maintained ..... 125
12.4 Configuration Control ..... 126

## *Appendices*

Appendix A: Stakeholder Survey Questionnaire ..... A-1
Appendix B: Functional Requirements ..... B-1
Appendix C: Architecture Interconnect Diagrams ..... C-1
Appendix D: Architecture Flows ..... D-1

## *List of Figures*

Figure 1-1. Gulf Region ITS Architecture Boundaries ..... 7
Figure 2-1. Architecture Development Process ..... 15
Figure 2-2. Systems Engineering Approach ..... 17
Figure 7-1. High Level Interconnect Diagram ..... 80
Figure 7-2. MDOT District 6 Interconnect Diagram ..... 82
Figure 7-3. Gulf Region TOC Interconnect Diagram ..... 83
Figure 7-4. Gulf Region Transit Interconnect Diagram ..... 84
Figure 7-5. SAMPLE: MDOT District 6 Architecture Flow Diagram ..... 85

## *List of Tables*

Table 2-1. Mapping of Requirements to Architecture Outputs ..... 18
Table 3-1. Gulf Region ITS Architecture Stakeholders ..... 20
Table 3-2. Operational Concept for Gulf Region ITS Architecture ..... 25
Table 4-1. Gulf Region ITS Inventory ..... 34
Table 5-1. List of User Services for the Gulf Coast Region ..... 51
Table 5-2. User Services Mapping to Market Packages ..... 53
Table 5-3. List of Market Packages for the Gulf Region ITS Architecture ..... 54
Table 5-4. List of Market Packages by Architecture Elements ..... 55
Table 6-1. Market Packages, Subsystems and Equipment Packages ..... 68
Table 6-2. Functional Requirements Example GRPC Data Management ..... 75
Table 8-1. Key Standards Supporting the Gulf Region ITS Projects ..... 91
Table 8-2. Key ITS Standards Application Area Matrix ..... 94
Table 9-1. Planned ITS Projects for Mississippi Gulf Region ..... 103
Table 10-1. Types of Agreements ..... 110
Table 10-2. Existing Agreements from Surveys ..... 111
Table 10-3. Gulf Region ITS Architecture Potential Agreements ..... 111
Table 11-1. Systems Engineering Requirements Supported by ITS Architecture ..... 120

THIS PAGE INTENTIONALLY LEFT BLANK

# EXECUTIVE SUMMARY

The Gulf Region Intelligent Transportation System (ITS) Architecture is a framework for ITS deployment and integration in the Mississippi Gulf Coast region. The purpose of the Gulf Region Intelligent Transportation System Architecture is to provide a "road map" for the deployment of ITS programs and projects in the Gulf Coast region over the next 20 years. While a Statewide ITS Architecture has been developed and updated for the entire state of Mississippi, this Gulf Region ITS Architecture specifically concentrates on the ITS components planned for the Gulf Coast region.

An ITS architecture describes the "big picture" for ITS deployment in terms of individual components (i.e. subsystems) that will perform the functions necessary to deliver the desired services. An ITS architecture supports effective and efficient deployment of transportation and ITS projects that address the transportation problems and needs. The Gulf Region ITS Architecture has been developed by the Mississippi Department of Transportation (DOT) in conjunction with the Gulf Regional Planning Commission (GRPC) and various stakeholders in the Mississippi Gulf Coast region. The architecture represents a shared vision of how each agency's systems will work together in the future, sharing information and resources to provide a safer, more efficient, and more effective transportation system for travelers. The architecture is a living document and will change as stakeholders and needs change.

### VISION, MISSION, AND GOALS

The GRPC and various stakeholders in the Gulf Coast region have recognized the need for vision and strategic planning with respect to ITS technology. The vision for the Gulf Region ITS Architecture is one of enhanced transportation productivity, mobility, safety, efficiency and security through the use of integrated, cost-effective ITS technologies and systems and strong operational relationships.

The Gulf Region ITS program mission is similar to the MDOT ITS program mission and the corresponding Mission Statement is:

***"Gulf Region Stakeholders will use ITS technologies to improve the quality of life for Gulf Coast residents and visitors by providing more reliable, informative, safer, and flexible passenger and freight multi-modal transportation services."***

In developing the Gulf Region ITS Architecture, it is important to consider the transportation related goals of the stakeholders in the Gulf Coast region. These transportation goals for the Gulf Coast region were set forth by the Gulf Regional Planning Commission and are as follows:

GOAL ONE:
Enhance accessibility, mobility, and general traffic flow of the transportation system for persons and all modes on the Mississippi Gulf Coast

GOAL TWO:
Provide a balanced, multi-modal transportation system by promoting the enhancement of all mobility options available to people and freight

GOAL THREE:
Support the connectivity and economic vitality of the Mississippi Gulf Coast region

GOAL FOUR:
Protect the environment, improve aesthetics, and increase safety for the region through comprehensive transportation planning

GOAL FIVE:
Maintain and preserve existing facilities by promoting efficient system management, as well as alternative and technologically advanced mitigation measures

GOAL SIX:
Provide a transportation planning process that informs the community and its public officials, as well as involves all members of the public

While these goals do not provide specific details regarding the deployment of individual ITS projects, they do outline the general requirements necessary when considering the development of the Gulf Coast region's ITS program. It is from these goals that specific objectives and ITS projects will be developed.

### DESCRIPTION OF REGION

The area covered by this architecture is the Mississippi Gulf Coast Region including all portions of Hancock, Harrison, and Jackson Counties in Mississippi. As shown in Figure 1-1, the region consists of the three coastal counties and the eleven cities below:

- Bay St. Louis
- D'Iberville
- Gulfport
- Moss Point
- Pascagoula
- Waveland
- Biloxi
- Gautier
- Long Beach
- Ocean Springs
- Pass Christian

The region is bordered by the States of Alabama and Louisiana to the east and west respectively, the Gulf of Mexico to the south and central Mississippi to the north. The Gulf of Mexico has a profound influence upon surface transportation in the region by not only restricting movement to the south and requiring numerous bridges to span the bays and rivers, but also necessitating hurricane evacuation routes and plans.

The region has a large tourism industry supported by numerous casinos located along US 90 from Biloxi to Gulfport, which like most communities in the region, are currently recovering from the devastating effects of Hurricane Katrina in 2005. The Gulf Regional Planning Commission serves as the Metropolitan Planning Organization (MPO) and coordinates the transportation planning and hurricane recovery efforts within the region. The Gulf Regional Planning Commission is also the lead agency responsible for the future utilization and maintenance/update of the Gulf Region ITS Architecture.

## ARCHITECTURE DEVELOPMENT PROCESS

The process for developing the Gulf Region ITS Architecture is based on the National ITS Architecture developed by the United States Department of Transportation (USDOT). Compliance with the National Architecture is mandatory as set forth in the Final Rule published by the FHWA and FTA on January 8, 2001 for receiving federal funds for ITS projects. By taking advantage of the USDOT's National ITS Architecture and developing a regional ITS architecture that is consistent with the National ITS Architecture, the Gulf Coast region will be able to take advantage of the growing supplier/vendor market for ITS products and services.

Development of the Gulf Region ITS Architecture begins with the identification of stakeholders and their needs. The objective of this task is to identify and engage stakeholders that own or operate ITS systems and other agencies that have an interest in the transportation issues within the Gulf Coast region. Information on existing and planned ITS projects within the region was collected through a comprehensive stakeholder survey. The survey results were then compiled and used as a baseline for the Gulf Region ITS Architecture. As transportation systems become increasingly complex, it is important to ensure that the ITS systems deployed within a state or region are compatible and can be integrated with one another. This, in turn, promotes the use of common standards and facilitates the expansion of ITS systems, which will lead to national compatibility of ITS systems.

A series of stakeholder meetings was held in the Gulf region in September and December 2006. Stakeholders from the MDOT, Mississippi Highway Patrol (MHP), City/County Traffic Engineering, law enforcement, transit, planning, and other agencies attended one of two meetings held in Biloxi. During these meetings, the attendees were given an overview of the Gulf Region ITS Architecture project and the National ITS Architecture effort, and common themes and user needs were addressed on a regional basis.

As illustrated in the Systems Engineering Approach recommended by the FHWA, an ITS architecture provides a starting point for systems engineering analyses that are performed during ITS project development. The ITS Architecture is a dynamic document that requires periodic updates to reflect changes in an agency's ITS program due to funding levels, evolving project or

system requirements, or the introduction of improved technology. Once ITS projects are programmed, the ITS architecture provides initial inputs to support the systems engineering process including the establishment of the concept of operations, requirements, and high-level design and test planning of ITS projects. The ITS architecture improves continuity across the project lifecycle, from planning through project development and operations. As required by the FHWA, the regional ITS architecture serves to meet the criteria of Final Rule 940. The Final Rule requires that all ITS projects funded with highway trust funds be developed based on a systems engineering analysis.

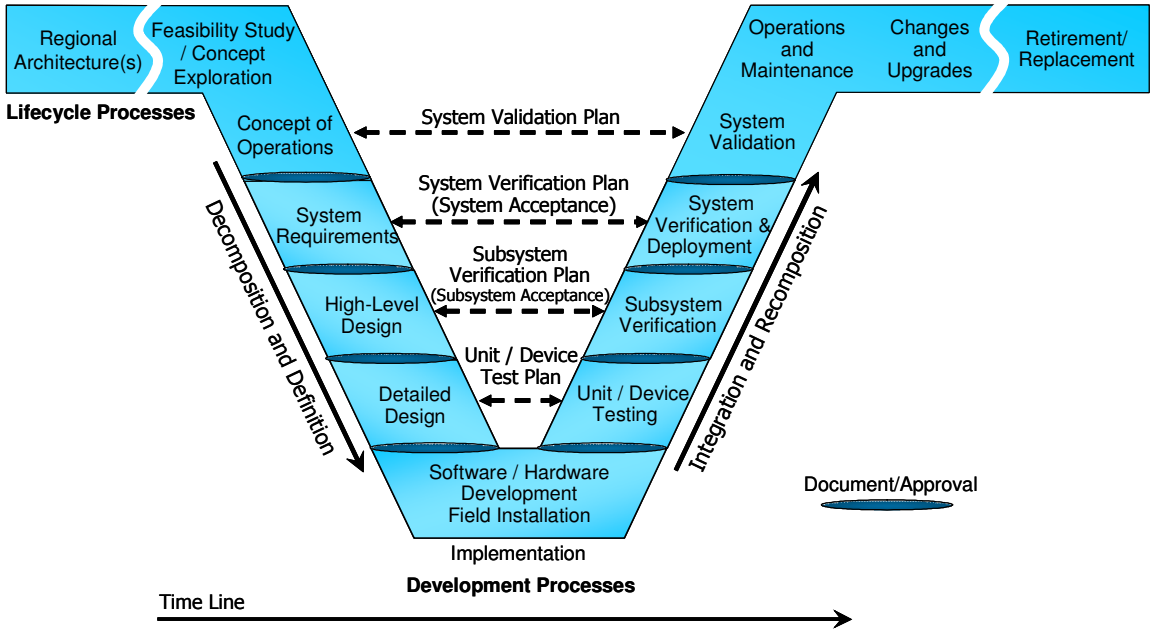


**Systems Engineering Approach**

## OPERATIONAL CONCEPT

The Gulf Region ITS Architecture is intended to facilitate data sharing and cooperative control among ITS systems throughout the Gulf Coast region. The architecture defines an operational concept that describes each stakeholder's current and future roles and responsibilities in the implementation and operation of ITS systems. The architecture describes and categorizes the stakeholders' roles and responsibilities in eleven transportation service areas. These transportation service areas provide general classifications of the functions that the participating agencies are providing or will provide. The eleven transportation service areas are:

- Archived Data Management
- Electronic Payment
- Incident Management
- Parking Management
- Traffic Management
- Transportation Planning and Architecture Maintenance.
- Commercial Vehicle Operations
- Emergency Management
- Maintenance and Construction Management
- Public Transportation
- Traveler Information

## GULF REGION ITS ARCHITECTURE

The Gulf Region ITS Architecture describes coordination of overall system operations by defining interfaces between equipment and systems which have been or will be deployed by different organizational or operating agencies throughout the Gulf Coast region. The architecture identifies the current ITS deployment and how these systems interact and communicate with each other. It also builds on the existing systems and addresses the additional components deemed necessary to grow the ITS systems in the Gulf Coast region over the next 20 years to accommodate specific needs and to address issues of participating stakeholders.

A high-level interconnect diagram for the Gulf Region ITS Architecture, often referred to as a "sausage diagram" illustrates the architecture subsystems and primary types of interconnections (or communications) between these subsystems. The sausage diagram shown below was customized to reflect the systems of the Gulf Region ITS Architecture. The shaded areas indicate the functions and services that are not currently existing or planned in the Gulf Coast region.

This diagram shows the four classes of subsystems (Travelers, Centers, Vehicles, and Field) of an Intelligent Transportation System and how each subsystem can communicate with the other subsystems.

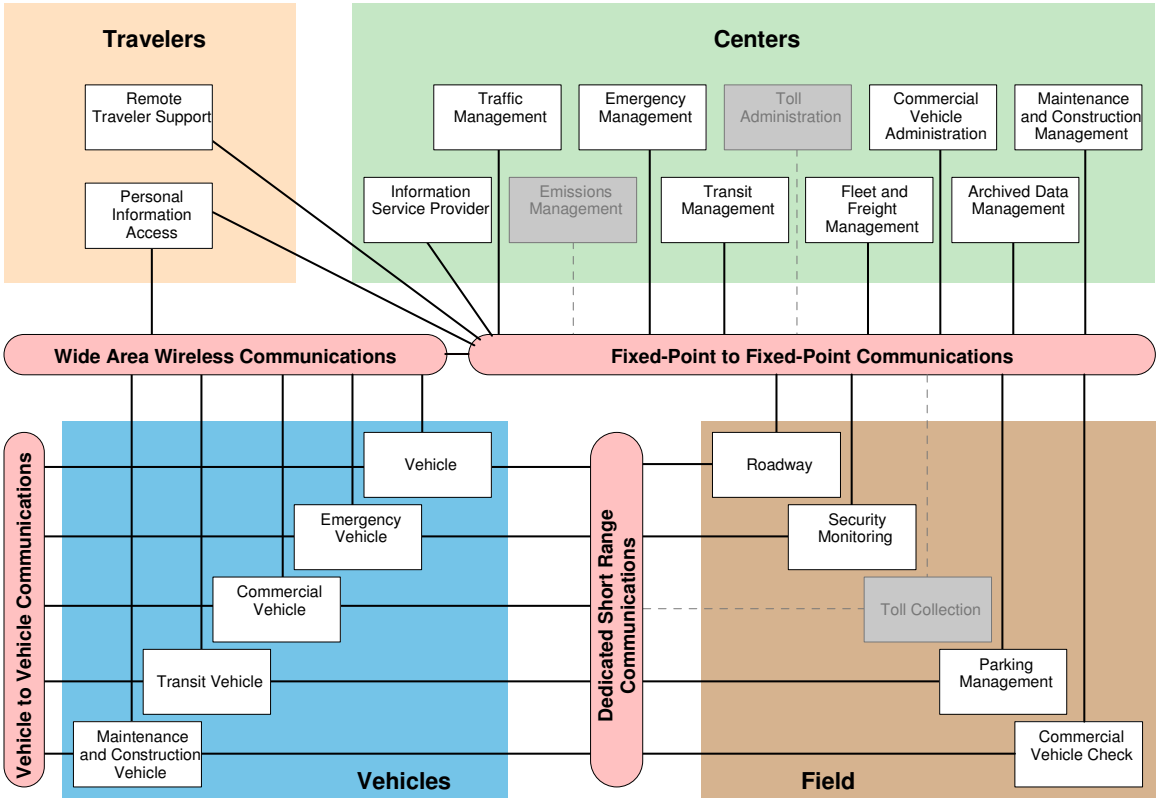


## APPLICABLE ITS STANDARDS

ITS Standards are fundamental to the establishment of an open ITS environment that achieves the goals originally envisioned by the USDOT. Standards facilitate deployment of interoperable systems at local, regional, and national levels without impeding innovation as technology advances and new approaches evolve. Standards can be thought of as the glue that holds the various pieces of architecture together. They define how the communications within an ITS environment take place.

While the Gulf Region ITS Architecture is a comprehensive plan which includes various ITS applications, it does not cover every conceivable ITS technology. As such, not all ITS standards will be applicable to the existing and planned projects. The applicable National ITS standards were identified that support the ITS projects in the Gulf Coast region. A guide to the key ITS standards that should be considered for use in different types of ITS projects was developed in terms of an application area matrix on pages 94. The application areas are deployment-oriented

categories focused on specific ITS services or systems. They can assist deployers in finding the application area within which a particular ITS project fits.

### PROJECT SEQUENCE

The Gulf Region ITS Architecture recommends a sequence in which ITS projects may be implemented. The project implementation sequence is based on a combination of two factors:

- **Prioritization of projects based on existing conditions and stakeholder needs.** ITS projects were prioritized to reflect a deployment path (sequence) of stakeholder needs. As technology, funding opportunities, and requirements continue to evolve, it is expected that the GRPC will reevaluate and reprioritize projects frequently.

- **Project dependencies, based on how successive ITS projects can build upon one another.** Project dependencies influence the project sequencing. It is beneficial to identify the information and functional dependencies between projects.

### AGREEMENTS FOR IMPLEMENTATION AND OPERATION

The Gulf Region ITS Architecture provides both a technical and institutional framework for the deployment of ITS in the Gulf Coast region. Institutional integration involves cooperation and coordination between various agencies and jurisdictions to achieve seamless operations and interoperability. Information sharing and exchanges between systems require knowledge of the transmission protocol and data formats to ensure compatibility. Coordinating field device operations owned by different agencies requires defined procedures for submitting data requests and rules governing when such requests can be honored. While all interfaces involve good working relationship between agencies for data compatibility, agreements for procedure, operation, maintenance, and training may also be critical elements to optimizing the benefits of the architecture. The Gulf Region ITS Architecture identifies and summarizes common types of agreements used for implementation and operation of ITS projects and systems.

## IMPLEMENTATION AND INTEGRATION STRATEGIES

The Gulf Region ITS Architecture provides guidance for planning and deploying ITS projects within the Gulf Coast region. It represents a detailed plan for the evolution of the ITS systems in the Gulf Coast region and can be used to support transportation planning efforts and ITS project development efforts. In addition, the Gulf Region ITS Architecture defines how the planning of ITS projects will be integrated into the existing Project Development Process for the GRPC Metropolitan Planning Organization (MPO). It provides information that can be used in the initial stages of project definition and development. A typical ITS project development cycle begins with project definition, followed by Request for Proposal (RFP) generation, leading to project implementation. Information in the Gulf Region ITS Architecture can assist in all three of these phases of project development. It is through the Gulf Region ITS Architecture that program management and project deployment will be a planned and coordinated effort on a regional basis.

An ITS architecture focuses on the integration of systems to gain the maximum benefit of each system's information and capabilities across the transportation network. The most challenging issue in the integration of an ITS architecture in the planning process is the fact that there is more than one planning process. Coordination is important among MDOT, the MPO, and Planning and Development Districts for ITS projects in their respective plans. Integration opportunities can be taken advantage of within the region and with other regions. This is the primary intent of the ITS architecture compliance where Federal funding is involved.

Another difficult issue to address is coordination of ITS project planning between the Federally funded projects and non-Federally funded projects. The Gulf Region ITS Architecture provides a bridge between Federally and non-Federally funded projects and systems. Coordinating all of these projects requires an understanding by all existing and potential ITS stakeholders within the entire region. The Gulf Coast ITS Architectures provide a common reference point for all stakeholders to gain insight into the integration of the systems in the region.

## DOCUMENTATION OF ITS ARCHITECTURES

The Gulf Region ITS Architecture is documented in two forms. The first is this document, which provides an overview of the architecture and summary information regarding various aspects of the architecture. The second form of documentation is the Turbo Architecture database. The database prepared using Turbo Architecture, a software tool developed by FHWA, captures the details of the Gulf Region ITS Architecture including definitions of stakeholders, inventory, projects, operational concept, market packages, equipment packages, interconnects, interfaces, functional requirements, standards, and agreements.

## ARCHITECTURE MAINTENANCE

By its nature, an ITS architecture is not a static set of outputs. The Gulf Region ITS Architecture is a living document and should be modified as plans and priorities change, ITS projects are implemented, and the ITS needs and services evolve in the Gulf Coast region. An architecture maintenance plan is developed to address the needs for maintenance and updates. The architecture maintenance plan defines the key aspects of the process for updating and maintaining the Gulf Region ITS Architecture, including:

- Who is responsible for architecture maintenance?
- What will be maintained?
- How will it be maintained?

The Gulf Regional Planning Commission will be responsible for all aspects of maintenance for the Gulf Region ITS Architecture.

THIS PAGE INTENTIONALLY LEFT BLANK

# 1. INTRODUCTION

The Gulf Region ITS Architecture provides a roadmap for the Intelligent Transportation Systems (ITS) deployment and integration in the Gulf Coast region and ensures ITS system compatibility, connectivity, and standardization.

An ITS architecture describes the "big picture" for ITS deployment in terms of individual components (i.e. subsystems) that will perform the functions necessary to deliver the desired services. It does not specify the technology used in project implementation, nor does it define how a project is deployed. The ITS Architecture does, however, describe the functions (e.g., gather traffic information or request a route) that are required for ITS, the physical entities or subsystems where these functions reside (e.g., the field or the vehicle), and the information flows and data flows that connect these functions and physical subsystems together into an integrated system.

The United States Department of Transportation (USDOT) set a deadline for the implementation of a regional architecture in order for an agency or region to continue receiving funding through the federal Highway Trust Fund for ITS projects. Any region that is currently implementing ITS projects shall have a regional architecture. In addition, any not currently implementing ITS projects shall have a regional ITS architecture within four years of the first ITS project for that region advancing to final design. Generally, rural areas may adopt the statewide architecture as their regional architecture.

The Gulf Region ITS Architecture has been developed by the Mississippi Department of Transportation (MDOT) in conjunction with the Gulf Regional Planning Commission (GRPC) which is the Metropolitan Planning Organization (MPO) for the Gulf Coast region. The architecture represents a vision of how each agency's systems will work together in the future, sharing information and resources to provide a safer, more efficient, and more effective transportation system for travelers in the Mississippi Gulf Coast region.

The timeframe considered for this architecture is a 20-year vision for ITS activities in the Gulf Coast region. This means that the Gulf Region ITS Architecture will address existing ITS

systems, as well as those planned for development over the next 20 years. It represents a snapshot of the currently anticipated projects based on information from stakeholders. As such, the architecture requires regular updates, at least bi-annually, to ensure that it maintains an accurate representation of the region.

The process for developing the Gulf Region ITS Architecture is based on the National ITS Architecture developed by the United States Department of Transportation (USDOT). Compliance with the National Architecture is mandatory, as part of the Final Rule published by the Federal Highway Administration (FHWA) and Federal Transit Administration (FTA) on January 8, 2001 for receiving Federal funds for ITS projects. By taking advantage of the USDOT's National ITS Architecture for developing the Gulf Region ITS Architecture, the Gulf Coast region will be able to take advantage of consistent standards and a growing supplier/vendor market for ITS products and services. As the standards are implemented across the nation, economies of scale will be realized in the purchase and development of ITS related products and services.

## 1.1 Vision, Mission, and Goals

**Vision**

The GRPC and various stakeholders in the Gulf Coast region have recognized the need for vision and strategic planning with respect to ITS technology. The vision for the Gulf Region ITS Architecture is one of enhanced transportation productivity, mobility, safety, efficiency, and security through the use of integrated, cost-effective ITS technologies and systems and strong operational relationships.

**Mission**

The Gulf Region ITS program mission is similar to MDOT's ITS program mission, and the corresponding Mission Statement is:

***"Gulf Region Stakeholders will use ITS technologies to improve the quality of life for Gulf Coast residents and visitors by providing more reliable, informative, safer, and flexible passenger and freight multi-modal transportation services."***

**Goals**

In developing the Gulf Region ITS Architecture, it is important to consider the goals and objectives of the stakeholders in the Gulf Coast region. All ITS projects in the Gulf Coast region should be developed in an effort to achieve these goals and objectives. The goals and objectives for the Gulf Coast region were set forth by the Gulf Regional Planning Commission, and are as follows:

Goal One:

Enhance accessibility, mobility, and general traffic flow of the transportation system for persons and all modes on the Mississippi Gulf Coast.

Objectives

1. Relieve traffic congestion and decrease travel time on Gulf Coast roadways;
2. Improve performance and efficiency of the transportation system;
3. Improve accessibility to transportation services and community services;
4. Provide efficient hurricane evacuation routes;
5. Maximize emergency vehicle efficiency and access;
6. Provide Long Range Transportation Planning; and
7. Maintain a financially constrained Transportation Improvement Program (TIP).

Goal Two:

Provide a balanced multi-modal transportation system by promoting the enhancement of all mobility options available to people and freight.

Objectives

1. Decrease reliance on single-occupancy vehicles;
2. Promote transit as a viable alternative to automobile travel;
3. Enhance the movement of freight;
4. Maximize the mobility and access of pedestrians and bicyclists;
5. Maximize transit efficiency and accessibility for the public; and

6. Maximize access to transportation and improve the mobility of transportation disadvantaged citizens.

Goal Three:

Support the connectivity and economic vitality of the Mississippi Gulf Coast region.

Objectives

1. Promote improvements serving regional needs;
2. Support the transportation needs of local governments;
3. Support the transportation interests of the community stakeholders to promote the economic vitality and creation of jobs in the region; and
4. Provide financially feasible transportation plans.

Goal Four:

Protect the Environment; improve aesthetics, and increase safety for the region through comprehensive transportation planning.

Objectives

1. Provide for safer travel on the Mississippi Gulf Coast;
2. Decrease mobile emissions in the region;
3. Encourage the design of roadways that provide safe, aesthetically pleasing and livable community improvement measures; and
4. Implement planning processes that properly evaluates all alternatives to benefit all roadway users.

Goal Five:

Maintain and preserve existing facilities by promoting efficient system management as well as, alternative and technologically advanced mitigation measures.

Objectives

1. Promote the use of Intelligent Transportation System (ITS) projects and strategies to improve traffic flow;
2. Promote the improvement of existing transportation facilities to avoid unnecessary capital improvements;
3. Encourage land use development that promotes transportation efficiency; and
4. Preserve future transportation corridors.

Goal Six:

Provide a transportation planning process that informs the community and its public officials, as well as involves all members of the public.

Objectives

1. Raise level of understanding of the transportation process in the region and provide the public with opportunities for involvement in the transportation planning process;
2. Ensure that the region's traditionally underserved population including low-income, minorities and transportation-disadvantaged are involved in the transportation planning process;
3. Develop measures to prevent the denial of, reduction in, or significant delay in the receipt of transportation benefits by low-income and minority populations;
4. To provide a proactive public involvement process that is complete and meaningful;
5. Strengthen coordination between local public agencies and MDOT to ensure a continuing, cooperative, and comprehensive transportation planning process;
6. Facilitate participation of non-traditional participants in the planning process;
7. To provide a timely and early involvement to ensure public access and opportunity for comment (by stakeholders and the public) on key decisions;

## 1.2 Description of the Region

**Geographic Scope**

The area covered by the Gulf Region ITS architecture is the Mississippi Gulf Coast Region including all portions of Hancock, Harrison, and Jackson Counties in Mississippi. In addition to the three counties, the region consists of the eleven cities shown below and in Figure 1-1.

- Bay St. Louis
- Biloxi
- D'Iberville
- Gautier
- Gulfport
- Long Beach
- Moss Point
- Ocean Springs
- Pascagoula
- Pass Christian
- Waveland

The region is bordered by the States of Alabama and Louisiana to the east and west respectively, the Gulf of Mexico to the south and central Mississippi to the north. The Gulf of Mexico has a profound influence upon surface transportation in the region by not only restricting movement to the south and requiring numerous bridges to span the bays and rivers, but also necessitating hurricane evacuation routes and plans.

The region has a large tourism industry supported by numerous casinos located along US 90 from Biloxi to Gulfport, which like most communities in the region, are currently recovering from the devastating effects of Hurricane Katrina in 2005. The Gulf Regional Planning Commission serves as the Metropolitan Planning Organization (MPO) and coordinates the transportation planning and hurricane recovery efforts within the region. The Gulf Regional Planning Commission is also the lead agency responsible for the future utilization and maintenance/update of the Gulf Region ITS Architecture. The MPO addresses transportation planning and programming issues in the Gulf Coast metropolitan area, and is responsible for developing metropolitan transportation plans and the transportation improvement programs (TIP) within regional boundaries.

**Figure 1-1. Gulf Region ITS Architecture Boundaries**

### Service Scope

The Gulf Region ITS Architecture covers services across a broad range of ITS, including traffic management, public transportation, traveler information, commercial vehicle operations, emergency management, maintenance and construction management, archived data management, and electronic payment.

### Time Frame

The timeframe considered for the Gulf Region ITS Architecture is a 20-year vision for ITS activities in the Gulf Coast region. This means that the Gulf Region ITS Architecture addresses existing ITS systems as well as those planned for development over the next 20 years, and represents a vision of how each agency's systems will work together in the future, sharing information and resources to provide a safer, more efficient, and more effective transportation system for travelers in the Gulf Coast region. The architecture represents a snapshot of the currently anticipated projects based on information from stakeholders. As such, the architecture requires regular updates to ensure that it maintains an accurate representation of the region.

## 1.3 Organization of the Report

This report is organized to reflect the steps undertaken in the development of the Gulf Region ITS Architecture. The major sections of the report are summarized below:

- **Section 1 – Introduction**: This section identifies the vision, mission, and goals of the Gulf Region ITS Architecture. It also provides a general description of the area covered and timeframe associated with the Gulf Region ITS Architecture.

- **Section 2 – ITS Architecture Development Process**: This section describes the process for developing the Gulf Region ITS Architecture and summarizes the requirements of the final FHWA Rule and FTA policy on ITS Architecture and Standards.

- **Section 3 – Stakeholders and Operational Concept**: This section identifies and describes participating agencies and stakeholders and their roles and responsibilities in the operation and implementation of the ITS systems and/or components within the Gulf Coast region.

- **Section 4 – Inventory**: This section identifies the existing and planned ITS elements within the Gulf Coast region.

- **Section 5 – User Services and Market Packages**: This section identifies a list of user services and market packages that are applicable to the Gulf Coast region. The user services describe what transportation functions and services should be provided from the user's perspective. The market packages provide a collection of service-oriented technology bundles that can be incorporated in the development of the Gulf Region ITS Architecture.

- **Section 6 – Subsystems, Equipment Packages and Functional Requirements**: The customized list of market packages developed in Section 5 was used to define the subsystems, equipment packages, and functional requirements that are necessary for the implementation of those customized market packages.

- **Section 7 – Interconnects and Architecture Flows**: This section describes the physical architecture by defining interfaces between equipment and systems that may be deployed by different organizational or operating agencies throughout the region.

- **Section 8 – ITS Standards**: This section describes a list of key standards that support the implementation of the Gulf Region ITS Architecture.

- **Section 9 – Project Sequencing**: This section provides an implementation strategy as well as the sequencing of ITS project required for implementation over the next 20 years.

- **Section 10 – Agreements**: This section identifies and summarizes a list of agreements between agencies that may be necessary for operations.

- **Section 11 – Implementation and Integration Strategy**: This section describes the relationship between the Gulf Region ITS Architecture and the transportation planning process. It summarizes how the Gulf Region ITS Architecture can be used to assist in transportation planning and project implementation. This section also describes the opportunities and considerations for integrating ITS projects and systems at the regional and statewide levels.

- **Section 12 – Architecture Maintenance Plan**: This section describes a process for controlled updates to the Gulf Region ITS Architecture baseline so that the architecture continues to accurately reflect the existing ITS capabilities and future plans in the Gulf Coast region.

THIS PAGE INTENTIONALLY LEFT BLANK

# 2. ITS ARCHITECTURE DEVELOPMENT PROCESS

## 2.1 National ITS Architecture

The process for developing the Gulf Region ITS Architecture is based on the National ITS Architecture developed by the USDOT. Compliance with the National Architecture is mandatory, as part of the Final Rule (23 CFR 940) published by the FHWA and FTA on January 8, 2001 for receiving federal funds for ITS projects. By taking advantage of the USDOT's National ITS Architecture and developing the Gulf Region ITS Architecture that is consistent with the National ITS Architecture, the Gulf Coast region will be able to secure federal funding for ITS projects as well as take advantage of the growing supplier/vendor market for ITS products and services.

As stated previously, an ITS architecture provides a "road map" for system development and ensures system compatibility, connectivity, and standardization. This is accomplished by:

- Identifying key stakeholders and interrelationships in the region;
- Describing required activities and/or functions to be completed;
- Defining the interconnections and interdependencies between functions; and
- Developing a "blueprint" for integration of systems.

Standardization helps by establishing a common "language" or vocabulary to describe ITS systems, which reduces confusion and facilitates communication within an organization, between organizations within a region, with contractors or clients, and among counterparts and colleagues nationwide.

The National ITS Architecture provides a common framework for planning, defining and integrating ITS systems and ensures system compatibility, connectivity, and standardization. It comprises the logical architecture and physical architecture which satisfy a defined set of user services. Compliance with the National ITS Architecture is a mandatory requirement for receiving Federal funds for ITS projects. The National ITS Architecture is maintained by the

United States Department of Transportation (DOT) and the latest version is available on the DOT web site at http://www.iteris.com/itsarch/index.htm.

In discussing the National ITS Architecture, it is important to be familiar with certain terminologies, which are described below:

***User Services*** describe what the system will do from the user's perspective. This term can be used to describe ITS systems in a rural, suburban, or urban setting. Identifying user services allows the process of system or project definition to begin by establishing the high-level services that will be provided to address a region's problems and/or needs. There are 33 user services defined in the version 5.1 of National ITS Architecture. These user services are grouped by eight user service bundles, including:

- Travel and Traffic Management
- Public Transportation Management
- Electronic Payment
- Commercial Vehicle Operations
- Emergency Management
- Advanced Vehicle Safety Systems
- Information Management
- Maintenance and Construction Management

The ***logical architecture*** part of the National ITS Architecture "defines what must be done to support the ITS user services. It defines the processes that perform ITS functions and the information that is shared between these processes. The logical architecture consists of data flow diagrams, process specifications, and data dictionary entries. The logical architecture is not technology specific, nor does it dictate a particular implementation. This implementation independence makes the logical architecture accommodating to innovation, scalable from small-scale implementations to large regional systems, and supportive of widely varied system designs".[1]

[1] US Department of Transportation. http://itsarch.iteris.com/itsarch/html/glossary/glossary.htm. (accessed August 2006).

The ***physical architecture*** is "the part of the National ITS Architecture that provides agencies with a physical representation of the important ITS interfaces and major system components." It provides a high-level structure around the processes and data flows defined in the logical architecture. The principal elements in the physical architecture are the subsystems and architecture flows that connect these subsystems and terminators into an overall structure. The physical architecture takes the processes identified in the logical architecture and assigns them to subsystems. In addition, the data flows (also from the logical architecture) are grouped together into architecture flows. These architecture flows and their communication requirements define the interfaces required between subsystems, which form the basis for much of the ongoing standards work in the ITS program".[1]

***Subsystems*** are individual pieces of the overall Intelligent Transportation System that perform particular functions, such as managing traffic or providing traveler information. Subsystems are grouped into four classes: centers, vehicles, field, and travelers.

***Market Packages*** are pieces of the architecture that are required to implement a particular transportation service. It also describes a collection of equipment packages that provides the functions necessary to deliver a given ITS service. Market packages are tailored to fit real world transportation problems and needs, either separately or in combination with each other. Currently, there are a total of 85 market packages in the version 5.1 of National ITS Architecture.

***Equipment Packages*** group similar functions of a particular subsystem together into a package of hardware and software capabilities. They are closely associated with market packages and are used as a basis for estimating deployment costs. Currently, there are a total of 198 equipment packages defined in the version 5.1 of National ITS Architecture.

***Standards*** define the interfaces between physical architecture components or entities and are fundamental to the establishment of an open ITS environment. Standards also facilitate the deployment of interoperable systems at local, regional, and national levels without impeding innovation as technology advances and new approaches evolve. There are currently over 110

ITS standards defined in the National ITS Architecture. By requiring compliance with these defined standards, the interoperability, interchangeability, and expandability of ITS systems can be ensured.

## 2.2 Gulf Region ITS Architecture Development Process

The process to develop the Gulf Region ITS Architecture is illustrated in Figure 2-1. Figure 2-1 shows six general steps in the "lifecycle" of an ITS architecture. In the first four steps, the ITS architecture products are developed and then these products are used and maintained in steps 5 and 6. The development process begins with basic scope definition and team building and moves through increasingly detailed steps, culminating in specific products that will guide the "implementation" of the Gulf Region ITS Architecture.

Development of the Gulf Region ITS Architecture began with the identification of stakeholders and their corresponding transportation needs. The initial list of regional ITS stakeholders was developed from the ITS stakeholder list used for the Statewide ITS Architecture and expanded by Gulf Regional Planning Commission staff who are familiar with the various transportation stakeholders in the region. The objective of this task was to identify and engage stakeholders that own or operate ITS systems and other agencies interested in the transportation issues within the Gulf Coast region. Information on existing and planned ITS projects within the region was collected from a comprehensive stakeholder survey that was distributed to ITS Stakeholders in the region. The survey results were then compiled and used as the foundation for developing the Gulf Region ITS Architecture and further augmented with stakeholder input received during the two Gulf Region stakeholder meetings conducted in September and December 2006.

The stakeholders' needs were then consolidated and mapped against the market packages and the physical architecture defined in the National ITS Architecture. A market package is a "bundle" of technology services that is often purchased together as a group to provide the functions necessary to deploy the services. The selection of market packages allows for the identification of equipment packages and subsystems – a collection of building blocks for the development of an ITS architecture. The physical architecture defines the physical entities (Subsystems and

Terminators) that make up an Intelligent Transportation System. It defines the architecture flows that connect the various Subsystems and Terminators into an integrated system.

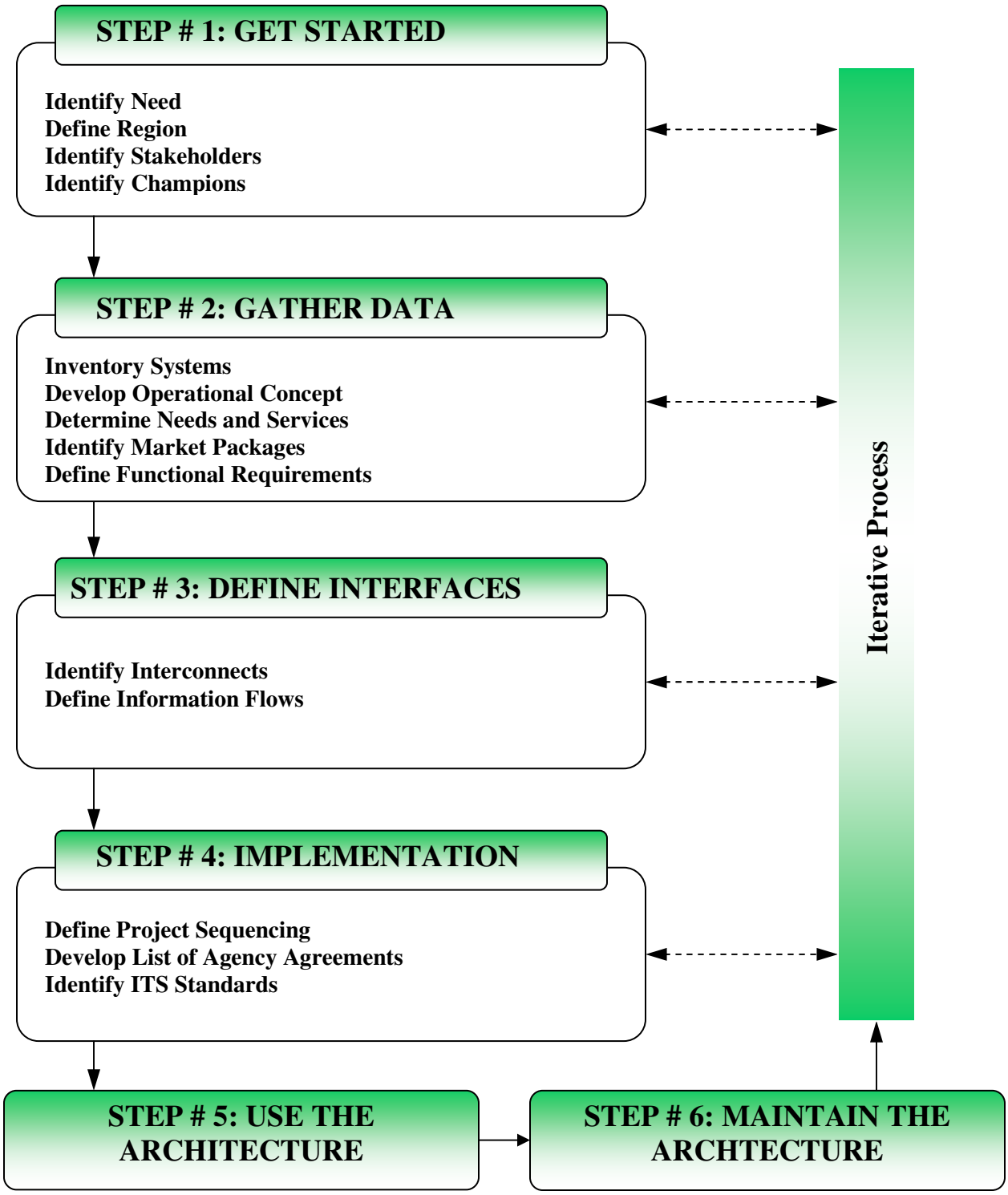


**Figure 2-1. Architecture Development Process**

This Gulf Region ITS Architecture coordinates overall system operation by defining interfaces between equipment and systems (interconnects and architecture flows). These interfaces describe the functions of the systems by showing the information that flows between various systems and subsystems.

Upon identification of the system interfaces, additional products were defined to guide the implementation of planned ITS projects. These products include a sequence of projects, list of agency agreements required for operations, and a list of ITS standards that should be considered for project implementation.

## 2.3 Architecture Development Coordination

During the development of the Gulf Region ITS Architecture, MDOT was also in the process of updating the Mississippi Statewide ITS Architecture. This required close coordination to ensure that both architectures were consistent with respect to their development processes and resulting content while avoiding unnecessary duplication of effort and documentation. These two ITS Architectures are intentionally designed to augment and reference one another, recognizing that the Statewide ITS Architecture addresses the ITS services being implemented across the state while the Gulf Region ITS Architecture specifically targets those ITS services planned for deployment in the Gulf Coast region.

## 2.4 Systems Engineering

The Final Rule requires that all ITS projects funded with highway trust funds be developed based on a systems engineering analysis. Systems engineering is a phrase used to describe the cyclical process of planning, designing, implementing, testing, operation, and maintenance of an ITS system or project throughout its useful life. The system engineering process begins with the development and implementation of an ITS architecture and continues by outlining the steps and level of detail of each phase of project deployment, from high-level tasks such as establishing the Concept of Operations to very detailed component design, installation, and testing. The purpose of the system engineering process is to ensure that a well-planned foundation is in place and then to affirm the requirements of an ITS system.

As illustrated in Figure 2-2, the Systems Engineering Approach recommended by the Federal Highway Administration (FHWA), provides a starting point for the systems engineering analyses that are performed during ITS project development. The ITS Architecture is a dynamic document that requires periodic updates to reflect changes in an agency's ITS program due to funding levels, evolving project or system requirements, or the introduction of improved technology. Once ITS projects are programmed, the ITS architecture provides initial inputs to support the systems engineering process including the establishment of the concept of operations, requirements, and high-level design and test planning of ITS projects. The ITS architecture improves continuity across the project lifecycle, from planning through project development and operations. As required by the FHWA, the Gulf Region ITS architecture serves to meet the criteria set forth in Final Rule 940.

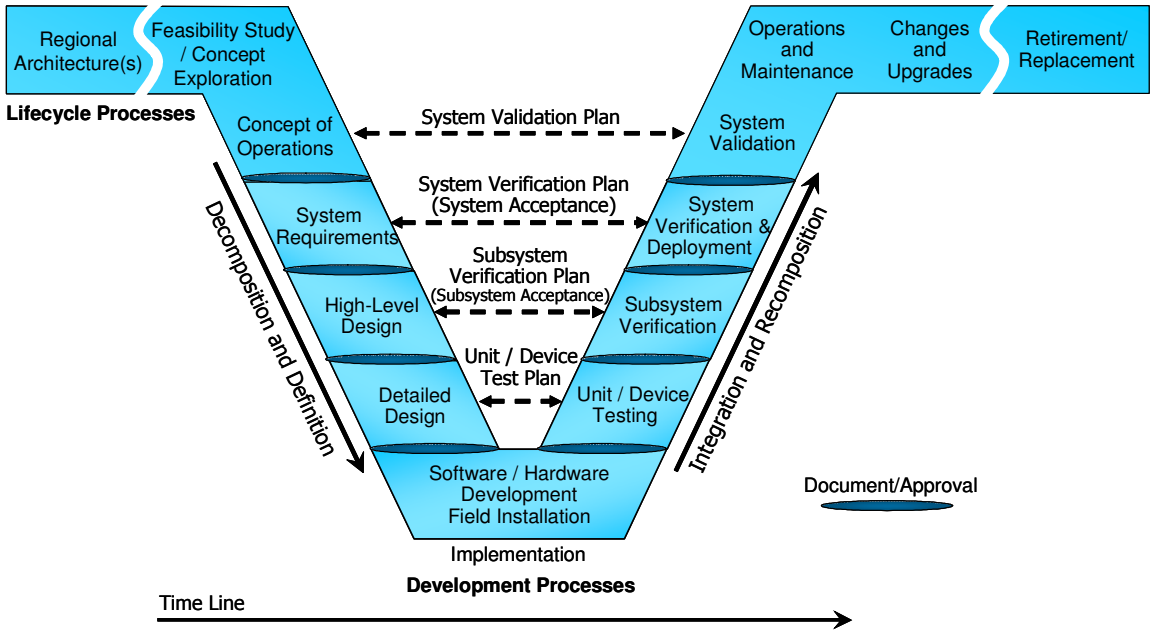


**Figure 2-2. Systems Engineering Approach**

## 2.5 Requirements of the Final FHWA Rule and FTA Policy on Architecture

The FHWA Final Rule (23 CFR 940) and FTA Policy on ITS Architecture and Standards, which took effect on January 8, 2001, defines a set of requirements that regional ITS architectures should meet. The FHWA Final Rule and FTA Final Policy state that – "ITS projects shall conform to the National ITS Architecture and Standards in accordance with the requirements.

Conformance with the National ITS Architecture is interpreted to mean the use of the National ITS Architecture to develop a regional ITS architecture, and the subsequent adherence of all ITS projects to that regional ITS architecture. Development of the regional ITS architecture should be consistent with the transportation planning process for Statewide and Metropolitan Transportation Planning." Table 2-1 shows how the requirements of the rule are met by the outputs developed for the Gulf Region ITS Architecture.

**Table 2-1. Mapping of Requirements to Architecture Outputs**

| Statewide/Regional ITS Architecture Requirements | Where Requirements are Documented |
|---|---|
| Description of region | Geographic definition, as well as timeframe and scope of services are given in Section 1 of this document. |
| Identification of participating agencies/stakeholders, their respective needs and the existing ITS inventory | Listing of stakeholders and their definitions is given in Section 3.1 of this document. An inventory of the elements operated by the stakeholders is contained in Section 4 of this document. |
| An operational concept that identifies the roles and responsibilities of participating agencies and stakeholders | The operational concept is defined in Section 3.2 of this document. |
| A list of any agreements (existing or new) for deployment and/or operations | A discussion of existing and new agreements is given in Section 10 of this document. |
| System functional requirements | The functional requirements of the ITS systems are described in an overview in Section 6 of this document, and are provided in detail in the Turbo Architecture database. |
| Interface requirements and information exchanges with planned and existing systems and subsystems | The interfaces and information flows are described in an overview in Section 6 of the document, and are described in detail in the Turbo Architecture database. |
| Identification of ITS standards supporting regional and national interoperability | An overview of the ITS standards is given in Section 8 of the document. The detailed listing of ITS standards applicable to each interface in the architecture is described in the Turbo Architecture database. |
| The sequence of projects required for implementation | Projects and their sequencing are covered in Section 9 of this document. |

As summarized in Table 2-1, this document, in conjunction with the Turbo Architecture database for the Gulf Region ITS Architecture, satisfies the mandatory requirements defined in the ITS Architecture and Standards Final Rule and Policy set forth by the FHWA and FTA.

THIS PAGE INTENTIONALLY LEFT BLANK

# 3. STAKEHOLDERS AND OPERATIONAL CONCEPT

## 3.1 Identification of Participating Agencies and Stakeholders

Stakeholders are commonly considered to be those who own or operate ITS systems in the region as well as those who have an interest in regional transportation issues. Stakeholders provide crucial input regarding the region's transportation investment and ITS deployments, and stakeholder participation and coordination is critical to the successful development of an ITS architecture. Through an extensive outreach process, including meetings and surveys, a wide range of participating agencies and stakeholders for the Gulf Region ITS Architecture were identified. Table 3-1 lists the agencies and stakeholders participating in the implementation and operation of the ITS projects in the region.

Table 3-1 includes both specific individual stakeholders and broadly defined generic stakeholders. Generic stakeholders, representing a group of stakeholders that provide similar roles, responsibilities and functions, are typically at county/city levels. The main purpose of defining and using generic stakeholder is to allow a more efficient way to organize the Gulf Region ITS Architecture and to keep the architecture at a maintainable level.

**Table 3-1. Gulf Region ITS Architecture Stakeholders**

| Stakeholder | Description |
|---|---|
| AMTRAK | Commercial rail service providing passenger rail transportation. |
| Cities of Bay St. Louis, Pascagoula, Biloxi, Pass Christian, D'Iberville, Waveland, Gautier, Long Beach, Moss Point and Ocean Springs and Counties of Hancock, Harrison and Jackson | These jurisdictions contain public works, engineering departments, Community Development, Fire, and Police. Publice Works and/or Engineering is responsible for managing infrastructure within the city. These departments also maintain parking systems including parking meters, parking lots and regulation signs and markings. |
| City/County Parking Operators | A stakeholder group representing agencies and stakeholders that manage operations of city/county-owned parking garages and metered parking lots. |
| City/County Public Safety Agencies | A stakeholder group representing agencies and stakeholders (Sheriff, Police, Fire and EMS) that receive emergency calls and respond to emergency dispatch within the jurisdiction area. |

| Stakeholder | Description |
|---|---|
| Coast Transit Authority | CTA is a non-profit provider of public transportation for the three coastal counties of Mississippi. It is an independently managed public utility that is governed by a Board of Commissioners. It is the designated recipient of State and Federal funding for urban transportation on the Mississippi Gulf Coast. |
| County Emergency Management Agencies | A stakeholder group representing county civil defense and emergency management agencies promoting emergency preparedness, assisting with the coordination of disaster response and recovery operations, and encouraging mitigation efforts before, during and after a disaster or major emergency. |
| Greyhound Bus Service | Commercial provider of passenger transportation service between cities. |
| Gulf Region Planning Commission MPO | Serves as the MPO for the Gulf Region urbanized area and provides transportation planning and technical assistance services to various agencies within the region. |
| Gulfport-Biloxi International Airport | A general aviation airport that serves air traffic in the Gulf Region. |
| Intermodal Rail Facilities | Represent railroad intermodal facilities which transport goods between railroad and other transportation modes including truck and water. The terminals coordinate freight movement with Fleet-Freight management, gather information on traffic conditions, and provide information on intermodal freight activities that is pertinent to traffic movement in the surrounding area. |
| Local/Cable TV and Radio Stations | Provide public broadcast of information pertaining to travel conditions, incidents, special events and other transportation related news services to the traveling public through radio, TV and other media. |
| Local Cities and Counties | A stakeholder group which includes the Counties of Hancock, Harrison, and Jackson, and cities with a current population less than 20,000 which includes Bay St. Louis, D'Iberville, Gautier, Long Beach, Moss Point, Ocean Springs, Pass Christian, and Waveland. |
| Local Traffic Generators | A stakeholder group representing agencies and stakeholders (such as Northrop Grumman) that share knowledge of events (date, time, location, duration, etc.) that may impact travel on roadways with MDOT, city/county governments, and emergency service providers. |
| Mississippi Department of Transportation (MDOT) | The Mississippi DOT plans, constructs, maintains and improves the state's road and bridges, and provides planning and financial support for other modes of transportation. |
| MDOT District 6 | The Gulf regional area is under Mississippi DOT District 6's jurisdiction which serves the counties of Hancock, Harrison, and Jackson, as well as the cities of Bay St. Louis, Pascagoula, Biloxi, Pass Christian, D'Iberville, Waveland, Gautier, Long Beach, Moss Point and Ocean Springs. |
| Mississippi Emergency Management Agency (MEMA) | Plans and coordinates with local emergency service providers to respond to threats from technological, man-made and natural origins; activates Emergency Operations Center, allocate resources, and maintains operational control of the State Emergency Response Team, the Mobile Operations Center, the Disaster Reconnaissance Team and the communications/state warning point section. |

| Stakeholder | Description |
|---|---|
| Mississippi Bureau of Investigations | A bureau of the Mississippi Dept. of Public Safety that is responsible for issuing AMBER Alerts. |
| Mississippi Department of Environmental Quality | A government agency that works with MEMA and other agencies to respond to truck or train hazardous material incidents. |
| Mississippi Department of Public Safety | A government agency that protects citizens and property by enforcing state laws, deterring criminal activity, assuring highway and public safety, and providing scientific, technical, and operational support to other criminal justice agencies. |
| Mississippi Highway Patrol | A division of the Mississippi Department of Public Safety which routinely patrols state roadways, including interstates, state highways and secondary county roads, enforces motor vehicle laws, and assists in major incidents. |
| Mississippi Office of Homeland Security | An office of the Mississippi Dept. of Public Safety that coordinates, maintains and administers homeland security practices within the state. |
| Mississippi Public Service Commission | Motor Carrier Division that manages motor carrier applications and registrations within the state. |
| Mississippi Tax Commission | Tax Commission administers tax laws of the state. |
| National Weather Service | The National Weather Service (NWS) provides weather, hydrologic, and climate forecasts and warnings for the United States. NWS data and products form a national information database and infrastructure which can be used by other governmental agencies, the private sector, the public, and the global community. |
| Neighboring States | A stakeholder group representing agencies and stakeholders of adjacent states (Louisiana, Alabama) that coordinates with Mississippi agencies on transportation management within state border regions. Neighboring states include Alabama and Louisiana. |
| Port Authority | A stakeholder group representing Hancock County Port and Harbor Commission, Jackson County Port Authority, and MS State Port Authority, which uses scales to determine cargo weight and related cargo restrictions, fees, etc, and also perform inspections. |
| Private Trucking Companies | A stakeholder group representing trucking companies that operate commercial vehicles. |
| Railroad Companies | A stakeholder group representing owner/operators of rail transportation facilities and associated ITS equipment and communications. Includes Kansas City Southern, Canadian National, Illinois Central, CSC, BNSF, and Norfolk Southern. |
| Transit Service Providers | A stakeholder group that provides fixed-time, demand responsive, or intercity transit services to the general public, elderly, disabled, school students, and others within the Gulf region. Includes the Coast Transit Authority, Greyhound, taxi and other local public/private transit service providers. Provide mobility to state residents. Transit service providers include intercity, urban and regional transit systems. |

## 3.2 Operational Concept

An operational concept defines each stakeholder's current and future roles and responsibilities in the implementation and operation of the regional ITS systems. Table 3-2 summarizes the general roles and responsibilities of the participating stakeholders identified above. As illustrated, the roles and responsibilities are categorized into eleven transportation service areas. These transportation service areas provide general classifications of what functions the participating agencies are providing or will provide. The eleven service areas and their major functions are described below.

**Archived Data Management** – Archived data management represents the functions that collect, process, store and utilize transportation data including traffic data, accident data, maintenance and construction data, public transportation data, commercial vehicle data, emission data, parking data and others.

**Commercial Vehicle Operations** – Commercial vehicle operations represents the administrative functions that support commercial vehicle credentials, tax, and safety regulations.

**Emergency Management** – Emergency management represents the functions that provide emergency call taking, public safety dispatch, disaster response and evacuation, securing monitoring and other security and public safety-oriented services.

**Incident Management –** Incident management represents the functions that manage both unexpected incidents and planned events so that the impact to the transportation network and traveler safety is minimized. It includes incident detection and verification, appropriate incident response, and regional coordination between traffic management agencies, maintenance and construction management agencies, emergency management agencies and others.

**Maintenance and Construction Management** – Maintenance and construction management represents the functions that provide construction management and maintenance of roadways, including snow and ice removal.

**Public Transportation** – Public transportation represents the functions that plan, manage, operate and maintain transit services. It also includes the function that provides transit traveler information.

**Traffic Management** – Traffic management represents the functions that manage a broad range of transportation facilities including freeway systems, rural and suburban highway systems, and urban and suburban traffic control systems. In the context of this project, it primarily includes network surveillance, traffic signal control, traffic information dissemination, and highway-rail intersection management.

**Traveler Information** – Traveler information represents the functions that collect, process, store, and disseminate static and real time transportation information to the traveling public.

**Transportation Planning and Architecture Maintenance** – Transportation planning and ITS architecture maintenance represents transportation planning functions and other related services. It also includes roles and responsibilities for the development and maintenance of an ITS architecture within the stakeholder's jurisdiction boundary.

**Electronic Payment** – Electronic Payment represents the functions associated with payment and administration of electronic payment for transit, parking and tolls.

**Parking Management** – Parking management represents the functions for electronic monitoring and management of parking facilities. It supports a dedicated short-range communications (DSRC) link to the Vehicle Subsystem that allows electronic collection of parking fees. It also includes the instrumentation, signs, and other infrastructure that monitors parking lot usage and provides local information about parking availability and other general parking information.

**Table 3-2. Operational Concept for Gulf Region ITS Architecture**

| Stakeholder | Transportation Service | Role/Responsibility | Status |
|---|---|---|---|
| City of Biloxi | Emergency Management | Support disaster response, recovery and evacuation. | Existing |
| | Incident Management | Coordinate incident information and response with local incident response agencies. | Existing |
| | | Perform incident detection and verification through video surveillance. | Planned |
| | | Distribute incident information to the public. | Existing |
| | | Operate roadside equipment for incident response. | Existing |
| | Maintenance and Construction Management | Coordinate construction and maintenance activities with other agencies, as needed. | Existing |
| | Surface Street Management | Notify MDOT District office of incidents or events that will impact freeway operations. | Existing |
| | | Operate and maintain signal systems and other infrastructure as required. | Existing |
| | | Request traffic management assistance from law enforcement agencies as needed. | Existing |
| | Traveler Information | Provide road closure updates and live traffic conditions (sharing MDOT camera images) to the public via website. | Existing |
| City of Gulfport | Emergency Management | Support disaster response, recovery and evacuation. | Existing |
| | Incident Management | Coordinate incident information and response with local incident response agencies. | Existing |
| | | Operate roadside equipment for incident response and traveler information dissemination. | Existing |
| | | Perform incident detection and verification through video surveillance. | Existing |
| | Maintenance and Construction Management | Coordinate construction and maintenance activities with other agencies, as needed. | Existing |
| | Surface Street Management | Notify MDOT District office of incidents or events that will impact freeway operations. | Existing |
| | | Operate and maintain signal systems and other infrastructure as required. | Existing |
| | | Request traffic management assistance from law enforcement agencies as needed. | Existing |
| City of Pascagoula | Emergency Management | Support disaster response, recovery and evacuation. | Existing |
| | Incident Management | Coordinate incident information and response with local incident response agencies. | Existing |

| Stakeholder | Transportation Service | Role/Responsibility | Status |
|---|---|---|---|
| | | Operate roadside equipment for incident response and traveler information dissemination. | Existing |
| | Maintenance and Construction Management | Coordinate construction and maintenance activities with other agencies, as needed. | Existing |
| | Surface Street Management | Notify MDOT District office of incidents or events that will impact freeway operations. | Existing |
| | | Operate and maintain signal systems and other infrastructure as required. | Existing |
| | | Request traffic management assistance from law enforcement agencies as needed. | Existing |
| City/County Parking Operators | Parking Management | Operate smart parking management system that includes transit information signs and information kiosks during parking facility/garage construction. | Planned |
| City/County Public Safety Agencies | Emergency Management | Dispatch appropriate response vehicles to scene. | Existing |
| | | Implement appropriate emergency or disaster response plan based on level of emergency. | Existing |
| | | Receive emergency calls and information regarding disasters and other emergency situations. | Existing |
| | Incident Management | Coordinate incident information and response with other local agencies. | Existing |
| | | Monitor situation and adjust response plan accordingly. | Existing |
| | | Provide emergency call taking for incidents within the county and/or city jurisdiction area and dispatch appropriate vehicles to scene, as needed. | Existing |
| | Surface Street Management | Provide traffic management assistance from law enforcement agencies as needed. | Existing |
| Coast Transit Authority | Emergency Management | Coordinate and implement response plans in the event that transit vehicles are needed in extraordinary situations (hurricane evacuations, etc.) | Existing |
| | | Support disaster response, recovery, and evacuation. | Existing |
| | | Operate cameras to monitor buses and bus stops for security, and coordinate threat with local law enforcement agencies. | Planned |
| | Incident Management | Receive information regarding incidents that will impact transit operations or schedules. | Existing |
| | | Report incident information to local incident | Existing |

| Stakeholder | Transportation Service | Role/Responsibility | Status |
|---|---|---|---|
| | | response agencies. | |
| | Transit Management | Coordinate transit information and operation with other transit service providers. | Existing |
| | | Provide transit schedule information to users and information service providers. | Existing |
| County Emergency Management Agencies | Emergency Management | Coordinate with EOCs for countywide emergency operations and homeland security practices during major disasters. | Existing |
| | | Disseminate emergency information to appropriate local law enforcement and emergency agencies. | Existing |
| | | Issue countywide warnings. | Existing |
| | | Receive emergency and disaster information from various agencies, such as OHS, MHP, DPS, etc. | Existing |
| GRPC MPO | Archived Data Management | Collect and archive transportation-related data within the region. | Existing |
| | Surface Street Management | Provide traffic forecast and demand management for the region. | Existing |
| Gulfport-Biloxi International Airport | Emergency Management | Coordinate airport emergency information and response with other local agencies. | Existing |
| | | Disseminate emergency information to travelers. | Existing |
| | | Operate cameras to monitor airport terminals, parking lots, and surrounding roadways for security, and coordinates threat with local law enforcement agencies. | Existing |
| | | Support disaster response, recovery, and evacuation. | Existing |
| | Incident Management | Coordinate incident information and response with local incident response agencies within airport area. | Existing |
| | Parking Management | Operate electronic parking payment system. | Planned |
| | Transit Management | Provide access to multimodal services for travelers (bus, taxi, etc.) | Existing |
| | | Provide current schedule information regarding airline operations. | Existing |
| Local Cable TV and Radio Stations | Traveler Information | Provide information to audience regarding congestion and incidents (traffic reports, etc.). | Existing |
| | | Receive information from MDOT, MHP, etc. regarding congestion and incidents. | Existing |
| Local Cities and Counties (Includes Hancock, Harrison, & | Emergency Management | Support disaster response, recovery and evacuation. | Existing |
| | Incident Management | Coordinate incident information and response with local incident response agencies. | Existing |
| | | Operate roadside equipment for incident | Existing |

| Stakeholder | Transportation Service | Role/Responsibility | Status |
|---|---|---|---|
| Jackson Counties, and Cities of Bay St. Louis, D'Iberville, Gautier, Long Beach, Moss Point, Ocean Springs, Pass Christian, and Waveland) | | response. | |
| | Maintenance and Construction Management | Coordinate construction and maintenance activities with other agencies, as needed. | Existing |
| | Surface Street Management | Notify MDOT District office of incidents or events that will impact freeway operations. | Existing |
| | | Operate and maintain signal systems and other infrastructure as required. | Existing |
| | | Request traffic management assistance from law enforcement agencies as needed. | Existing |
| Local Traffic Generators | Incident Management | Report events that may impact travel on roadways. | Existing |
| MDOT | Archived Data Management | Maintain DOT databases including accident, traffic volume, road weather information, commercial vehicle credential and safety data, etc. | Existing |
| | Commercial Vehicle Operations | Issue PrePass and ExpressPass permits. | Existing |
| | | Operate and maintain PrePass, WIM and oversize/overweight monitoring devices and field equipment. | Existing |
| | | Provide enforcement of CVO laws, rules, and regulations. | Existing |
| | | Provide weather, traffic, and other information via Internet, kiosks, etc. to CVO carriers. | Existing |
| | | Receive and disseminate credential and safety information to appropriate agencies as needed or requested. | Existing |
| | Emergency Management | Coordinate emergency response plans with EMAs and EOCs regarding the statewide transportation system, as applicable. | Existing |
| | | Disseminate emergency information to motoring public through DMSs, HAR, etc. | Existing |
| | | Provide support on transportation infrastructure as needed in the event of an emergency or disaster. | Existing |
| | Maintenance and Construction Management | Maintain current information regarding maintenance and construction activities and provide to motoring public. | Existing |
| | Traveler Information | Provide current information to travelers via website, etc. regarding congestion and incidents on the freeway system. | Existing |
| | | Provide telephone traveler information (511 System) via either cell phone or landline. | Planned |
| MDOT District 6 | Emergency Management | Communicate traffic information to local law enforcement and emergency response agencies, as needed. | Existing |

| Stakeholder | Transportation Service | Role/Responsibility | Status |
|---|---|---|---|
| | | | |
| | | Coordinate emergency response plans with state MDOT office, regarding the statewide transportation system, as applicable. | Existing |
| | | Disseminate emergency information to motoring public through DMSs, HAR, etc. | Existing |
| | | Monitor and implement roadway closure measures as needed to manage evacuation efforts. | Existing |
| | | Monitor emergency situation via CCTV system. | Existing |
| | | Provide district-level support on transportation infrastructure as needed in the event of an emergency or disaster. | Existing |
| | Freeway Management | Operate and maintain roadside equipment (CCTV, traffic sensors, DMS, HAR, speed warning system, etc.) for freeway traffic control and management, and disseminate traveler information (congestion, incident, etc.) to drivers. | Existing |
| | | Request traffic management assistance from MHP, service patrols, etc. as needed. | Existing |
| | Incident Management | Deploy maintenance personnel/equipment as appropriate to mitigate effects of incident. | Existing |
| | | Monitor situation via CCTV system and adjust response plans according to current conditions. | Existing |
| | | Monitor weather and external conditions and adjust response plans accordingly. | Existing |
| | | Receive and disseminate freeway incident information to motoring public via DMSs, HAR, etc. | Existing |
| | | Request traffic management assistance from MHP, service patrols, etc. as needed. | Existing |
| | | Dispatch highway service patrol vehicle assisting motorists in minor incidents. | Planned |
| | Maintenance and Construction Management | Coordinate construction and maintenance activities with local City and County transportation agencies, as needed. | Existing |
| | | Maintain construction and maintenance schedule for posting on websites and other traveler information sources. | Existing |
| | | Operate and maintain RWIS system (weather sensors and fog sensors) and collect road | Planned |

| Stakeholder | Transportation Service | Role/Responsibility | Status |
|---|---|---|---|
| | | weather information along major roadways, and distribute information to other agencies. | |
| | Surface Street Management | Operate and maintain signal systems and other infrastructure as required. | Existing |
| | | Receive and disseminate traveler information regarding surface street operations to motorists. | Existing |
| | | Request traffic management assistance from law enforcement agencies as needed. | Existing |
| | | Coordinate rail operations with railroad companies. | Planned |
| | Traveler Information | Provide current information to media. | Existing |
| MEMA | Emergency Management | Disseminate emergency/disaster information to MDOT, MHP, local EMAs & EOCs, etc., as appropriate. | Existing |
| | | Issue nationwide and regional warnings to government authorities and the civilian population in areas endangered by disasters. | Existing |
| | | Manage statewide response plans and coordinate with local EMAs. | Existing |
| Mississippi Bureau of Investigations | Emergency Management | Responsible for issuing AMBER Alerts. | Existing |
| Mississippi Department of Environmental Quality | Incident Management | Respond to truck or train hazardous material incidents. | Existing |
| Mississippi Department of Public Safety | Emergency Management | Monitor changes in situation and adjust response plans accordingly. | Existing |
| | | Receive and disseminate emergency information to appropriate agencies. | Existing |
| | Traveler Information | Provide weather/road conditions to the public via website. | Existing |
| Mississippi Highway Patrol | Commercial Vehicle Operations | Exchange safety and/or security information with other agencies. | Existing |
| | | Participate in roadside vehicle inspection for law and regulations enforcement. | Existing |
| | Emergency Management | Dispatch state patrol vehicles on the jurisdiction roadways. | Existing |
| | | Monitor situation and adjust response plans accordingly. | Existing |
| | | Receive information regarding emergencies and disasters and coordinate responses with local law enforcement agencies. | Existing |
| | Incident Management | Provide emergency call taking for incidents within jurisdiction and dispatch vehicles to | Existing |

| Stakeholder | Transportation Service | Role/Responsibility | Status |
|---|---|---|---|
| | | scene. | |
| | | Provide traffic management assistance as needed or requested. | Existing |
| Mississippi Office of Homeland Security | Emergency Management | Disseminate emergency and disaster information to appropriate agencies (MEMA, MDOT, MHP, etc.) | Existing |
| | | Implement and coordinate appropriate response plans on statewide level. | Existing |
| | | Issue homeland security warnings. | Existing |
| Mississippi Public Service Commission | Commercial Vehicle Operations | Exchange safety and credential information as needed or requested. | Existing |
| | | Manage motor carrier state application and registration. | Existing |
| Mississippi Tax Commission | Commercial Vehicle Operations | Manage commercial vehicle taxes including IFTA and IRP. | Existing |
| | | Provide tax information to appropriate agencies as needed or requested. | Existing |
| National Weather Service | Emergency Management | Issue weather alerts. | Existing |
| Private Trucking Companies | Commercial Vehicle Operations | Coordinate commercial vehicle management activities with public agencies. | Existing |
| | | Manage company vehicle fleets. | Existing |
| Railroad Companies | Surface Street Management | Coordinate rail operations with MDOT district office. | Planned |
| Transit Service Providers | Emergency Management | Coordinate and implement response plans in the event that transit vehicles are needed in extraordinary situations (hurricane evacuations, etc.) | Existing |
| | | Support disaster response, recovery, and evacuation. | Existing |
| | Transit Management | Coordinate transit information and operation with other transit service providers. | Existing |
| | | Provide transit schedule information to users and information service providers. | Existing |

THIS PAGE INTENTIONALLY LEFT BLANK

# 4. INVENTORY

The inventory of existing and planned Gulf Coast regional ITS elements supports development of interface requirements and information exchanges with these systems. A comprehensive inventory of these existing and planned systems is developed based on a survey of the region and stakeholder input. For development of the regional architecture, the Gulf Region is defined to encompass the following cities and counties:

| | |
|---|---|
| City of Bay St. Louis | City of Ocean Springs |
| City of Biloxi | City of Pascagoula |
| City of D'Iberville | City of Pass Christian |
| City of Gautier | City of Waveland |
| City of Gulfport | Hancock County |
| City of Long Beach | Harrison County |
| City of Moss Point | Jackson County |

A regional ITS architecture inventory is a list of all existing and planned ITS systems in a region as well as non-ITS systems that provide information to or get information from the ITS systems. The focus of the inventory is on those systems that support, or may support, interfaces that cross stakeholder boundaries. In general, the inventory should be managed so that it is as small as possible while still supporting the goal of identifying all key integration opportunities in the region. Each element in the inventory will normally include a name, associated stakeholder(s), a concise description, general status, and the associated subsystems or terminators from the National ITS Architecture. Table 4-1 provides a list of ITS systems, their general descriptions, and stakeholders involved with or responsible for operations and management of the systems. This inventory is developed based on the following sources:

- GRPC Regional ITS Architecture Stakeholder Survey Responses
- Mississippi Statewide ITS Architecture
- Mississippi ITS Strategic Plan
- Mississippi Gulf Coast Urbanized Area 2025 Transportation Plan
- Comprehensive Emergency Transportation Response Plan
- Other relevant project reports and websites

The stakeholder survey questionnaire is included in Appendix A.

**Table 4-1. Gulf Region ITS Inventory**

| Primary Stakeholder | System | Description | Status | Other Associated Stakeholder |
|---|---|---|---|---|
| AMTRAK | AMTRAK | Provide passenger train services, and coordinate with other transit modes for efficient movement of people. | Existing | |
| Greyhound | Greyhound | Intercity transit provider that provides transit service between cities. | Existing | |
| City of Biloxi | Database | Maintain/archive city data for a variety of uses such as traffic data and accident data. | Planned | |
| | Police | Operate Red Light Running Cameras for monitoring traffic violations. | Planned | |
| | Police Red Light Running Cameras | Using video technology to monitor the time, date, vehicle speed, and amount of time the light was red when a car speeds through a red light. | Planned | |
| | Public Affairs | Receive incident information from City Police and roadway closures from City TOC, and distribute information to Media by Fax and residents who have subscribed to the City's email distribution list. The road closure information is also published on the City website. | Existing | |
| | Public Works | Responsible for maintenance and construction activities. Plan to operate DMS for work zone management. | Planned | |
| | TOC | Operate city roadside equipment including traffic signal system and interconnected signal railroad crossings, for traffic control and management. Closed-loop signal systems, CCTV, traffic sensors and emergency vehicle preemption are planned. | Existing/ Planned | |
| | TOC Roadside Equipment | Roadside equipment includes any and all equipment distributed on and along the roadway which monitors and controls traffic. Closed-loop signal systems, CCTV, DMS, traffic sensors, and emergency vehicle preemption are planned. Trailblazer directional signs are also desired for evacuation. | Existing/ Planned | |
| | Website | The website, http://www.biloxi.ms.us/traffic/ provides road closure updates and live traffic conditions using MDOT camera images. | Existing | |
| City of Gulfport | Database | Maintain/archive city data for a variety of uses such as traffic data and accident data. | Existing | |

| Primary Stakeholder | System | Description | Status | Other Associated Stakeholder |
|---|---|---|---|---|
| | Public Works | Dispatch vehicles for maintenance and construction activities. The agency has the capability to automate vehicle maintenance scheduling. | Existing | |
| | Public Works Field Devices | Vehicle speed monitoring using remote devices for work zone management. DMS is planned. | Existing/ Planned | |
| | TOC | Operate city roadside traffic equipment including loop detector stations, closed-loop signal systems, emergency vehicle preemption, and interconnected signal railroad crossing for traffic control and management. CCTV and DMS are planned. | Existing/ Planned | |
| | TOC Roadside Equipment | Roadside equipment includes any and all equipment distributed on and along the roadway which monitors and controls traffic. This includes loop detector stations, closed-loop signal systems, emergency vehicle preemption, and interconnected signal railroad crossings. CCTV and DMS are planned. Trailblazer directional signs are also desired for evacuation. | Existing/ Planned | |
| City of Pascagoula | Database | Maintain/archive city data for a variety of uses such as traffic data and accident data. | Existing | |
| | Parking Management | Use DMS to control parking access. | Planned | |
| | Public Works | Responsible for maintenance and construction activities. Operate DMS for work zone management. | Existing | |
| | TOC | Operate city roadside traffic equipment including closed-loop signal systems and DMS for traffic control and management. HAR, emergency vehicle preemption, lane control devices and remotely controlled barrier systems are planned. | Existing | |
| | TOC Roadside Equipment | Roadside equipment includes any and all equipment distributed on and along the roadway which monitors and controls traffic. This includes closed-loop signal systems and DMS. HAR, emergency vehicle preemption, lane control devices and remotely controlled barrier systems are planned. Trailblazer directional signs are also desired for evacuation. | Existing/ Planned | |

| Primary Stakeholder | System | Description | Status | Other Associated Stakeholder |
|---|---|---|---|---|
| MDOT | MS Traffic.com | Mississippi DOT website provides real time traffic information (http://www.mstraffic.com/) including traffic conditions, incidents, streaming traffic video, road restrictions, roadway work, alerts, hurricane evacuation information, and other transportation-related information. Clearing house for real time incidents and travel speed information will be established, as well as information on transit service, airport/airline info, and commercial vehicle operation information. | Existing | |
| | Traveler Information Repository | A 511 system or similar systems that collect traveler information. | Planned | |
| | Statewide 511 System | Statewide 511 System will be an integrated statewide service, developed in phases. Initially the system will be implemented in Jackson. It will be connected to bordering states' 511 services where possible and available, and will be available to the traveling public 24 hours per day, 7 days per week. | Planned | |
| | MDOT Accident Database | Maintaining records on traffic accidents occurring on public roadways. A Safety Analysis Management System (SAMS) is planned as a Web-based application providing interactive GIS tools to assist in the query, visualization, and analysis of crash data. | Planned | |
| | MDOT Cellular Phone System for Incident Reporting | A system enables motorists to report incidents to the MDOT TMC using cellular phone numbers such as #999. This system could also allow users to contact local law enforcement, towing companies, ambulance services, and local transportation organizations highway helper vehicles. | Planned | |
| | MDOT ExpressPass Permitting System | The website https://www.expresspass.ms.gov/trucking enables online application and account management of oversize/overweight commercial vehicle permits. Available ExpressPass routes are also provided. | Existing | |
| | MDOT Highway Performance Monitoring System (HPMS) | Highway information system including data on the extent, condition, performance, use, and operating characteristics of the highways. | Existing | |

| Primary Stakeholder | System | Description | Status | Other Associated Stakeholder |
|---|---|---|---|---|
| | MDOT Statewide TMC | Statewide TMC in Jackson provides overall planning and implementation of incident management program, assists in incident detection and verification, initiates traffic management strategies on incident impacted facilities, controls signals on State routes outside of Jackson, provides traffic control, assists motorists with disabled vehicles, provides motorist information (HAR, VMS), determines incident clearance and roadway repair needs, establishes and operates alternate routes, dispatches freeway service patrols, dispatches maintenance resources such as dump trucks and sweepers, operates the GoMDOT web server, and shares video and data with City of Jackson TMC, media and police agencies. | Existing | |
| MDOT District 6 | MDOT District 6 TOC | The District TOC will operate and maintain the ITS equipment deployed in the MDOT district. The District TOC will also participate in local incident management programs, assist in incident detection and verification (CCTV), initiate traffic management strategies on incident impacted facilities, provide motorist information (HAR/LPFM, VMS), determine incident clearance and roadway repair needs, establish and operate alternate routes, dispatch maintenance resources such as dump trucks and sweepers. | Existing | |
| | Security Monitoring System | Utilize CCTV's to monitor drawbridges. | Planned | |
| | Maintenance Vehicles | Maintenance vehicles that are utilized to support road maintenance, such as Salt/Sand trucks, and Road Repair trucks. Once an Automated Vehicle Location (AVL) system is implemented, the equipped maintenance vehicles, service patrol vehicles or buses can serve as traffic probes to provide additional traffic flow data to the ITS systems. | Planned | |

| Primary Stakeholder | System | Description | Status | Other Associated Stakeholder |
|---|---|---|---|---|
| | Fog Detection Systems | MDOT plans to deploy fog related detection system in the Gulf Coast region. Information will be transmitted to a local TMC, and then conveyed to motorists via local television, DMS or HAR. | Planned | |
| | PrePass System | PrePass is an automatic vehicle identification system that allows participating transponder equipped commercial vehicles to bypass designated weigh stations and port-of-entry facilities across the United States. The PrePass system has been installed at 12 locations in the state. | Existing | |
| | Portable Dynamic Message Signs | Used to direct traffic for special events, maintenance and construction, and incident management. There are approximately 38 portable CMS units statewide with 12 additional signs under procurement. | Existing | |
| | Motorist Assistance Call Boxes | MDOT has installed motorist assistance call boxes on I-10 and I-110 along the Gulf Coast. Call boxes permit a traveler involved in an accident or stranded on the roadway to directly contact a responding agency regarding a stall or accident they are involved in. | Existing | |
| | Maintenance and Construction Offices | Dispatch maintenance vehicles for planned activities (road maintenance, snow plowing, etc.) and unplanned incidents within the jurisdiction area, and communicate maintenance and construction schedule and other related information to other agencies. | Existing | |
| | Weigh-in-Motion Stations | Weigh-in-Motion (WIM) stations to measure truck weights and axle configuration for enforcing law and regulations. On-line access to enforcement data at all permanent scale facilities is planned. WIM data is also planned to be available to relevant agencies via internet or through a database. | Existing | |

| Primary Stakeholder | System | Description | Status | Other Associated Stakeholder |
|---|---|---|---|---|
| | Highway Service Patrol Vehicles | Highway service patrol vehicles assist motorists in minor incidents (flat tire, accident, out of gas, etc.) to minimize disruption to the traffic stream. Vehicles will be equipped with AVL capability. | Planned | |
| | Traffic Signal Systems | Signal systems including traffic signals, loop detectors, video detection, and communications infrastructure. Emergency vehicle signal preemption and transit signal are planned. | Existing | |
| | Railroad Crossing Control | The deployment of integrated train detection and traffic control is planned in selected areas. | Planned | |
| | Video Surveillance Equipment | Monitor state major roadways to assist in incident management/emergency management. The Closed-Circuit Television (CCTV) camera is used to provide the ability to confirm specific conditions (e.g., incidents, lane blockages, congestion) and can aid in dispatching appropriate resources or formulating an appropriate traffic response. | Existing | |
| | Traffic Sensors | There are numerous types of traffic sensors to choose from, including in-pavement devices such as the commonly-used inductive loop detector and "non-intrusive" devices, including overhead sensors, including radar and microwave technologies, video image processing systems and acoustic sensors. | Existing | |
| | Speed Warning System | Includes static speed sign, speed detector (radar), and display system. Key features of the concept include mandatory speed limit signals, automatic and effective enforcement and automatic control of the speed signals. | Planned | |
| | Communication Infrastructure | It is planned to establish a more permanent approach for the primary communication links between MDOT Central Office and the Districts. As more ITS functionality is added, the demand on the communication infrastructure will increase. | Existing | |

| Primary Stakeholder | System | Description | Status | Other Associated Stakeholder |
|---|---|---|---|---|
| | Drawbridge Systems | The systems may include control devices such as warning lights, dynamic message signs at the drawbridge as well information systems providing travelers current or forecasted drawbridge status. | Existing | |
| | Highway Advisory Radio (HAR) | Disseminate information to travelers via radio systems. HAR systems installation is planned during roadway and bridge reconstruction/rehabilitation. HAR is also planned to be installed in advance of decision points on high volume / high accident routes and in the vicinity of major attractions, airports, and parking facilities. | Planned | |
| | Weather Sensors | Weather sensors collect pavement temperature, surface temperature, ambient temperature, wind speed and direction, pavement wet/dry, precipitation, and relative humidity. Additional sensors within the urban area could be deployed, and communication links can be established with MDOT sensors in rural areas will be installed. | Planned | |
| Mississippi Bureau of Investigation | Mississippi Bureau of Investigation | Issue AMBER Alerts. | Existing | |
| Mississippi Department of Environmental Quality | Mississippi Department of Environmental Quality | Work with MEMA and other agencies to deal with truck or train hazardous material incidents. | Existing | |
| Mississippi Emergency Management Agency | Mississippi Emergency Management Agency (MEMA) | Plan and coordinate with local emergency service providers to respond to threats from technological, man-made and natural origins; activate Emergency Operations Center, allocate resources, and maintain operational control of the State Emergency Response Team, the Mobile Operations Center, the Disaster Reconnaissance Team and the communications/state warning point section. | Existing | |

| Primary Stakeholder | System | Description | Status | Other Associated Stakeholder |
|---|---|---|---|---|
| | MEMA Emergency Operations Center | The State Emergency Operations Center provide emergency management center for statewide emergency operations and homeland security practices during major emergencies and disasters, and coordinate with local, state, and federal agencies. The center alerts state and local officials to all natural or man-made incidents throughout the state. Communications includes satellite, low band and UHF radios. A computerized alphanumeric paging system allows for rapid notification of all MEMA personnel as well as personnel in 78 counties. A high-speed digital fax system has enhanced the ability to rapidly communicate essential information to the field. Emergency management software for recording disaster/incident information is also used. | Existing | |
| Mississippi Department of Public Safety | Mississippi Road/Weather Conditions Website | Provides weather/road conditions for the entire state. The website is at http://www.dps.state.ms.us/dps/dps.nsf/roadmap?OpenForm. | Existing | |
| Mississippi Public Service Commission | SAFETYNET | A database management system that allows entry, access, analysis, and reporting of data from driver/vehicle inspections, crashes, compliance reviews, assignments, and complaints. | Existing | |
| Mississippi Highway Patrol | MHP District 8 Offices | Enforce traffic laws on state highways within the jurisdiction area covering the GRPC region; assist local law enforcement agencies and responding to statewide/regional emergencies. | Existing | |
| | *HP Cellular Phone System | Receive incident/emergency calls from travelers who use cellular *HP. | Existing | |
| | MHP Dispatch Centers | Receive incident/emergency calls, and utilize CAD system to dispatch emergency vehicles. CAD incident data and camera images will be shared between MHP dispatch centers and MDOT TMC. | Existing | |
| | MHP Emergency | Emergency vehicles responding to dispatch. AVL is planned. | Existing | |

| Primary Stakeholder | System | Description | Status | Other Associated Stakeholder |
|---|---|---|---|---|
| | Vehicles | | | |
| Mississippi Office of Homeland Security | Mississippi Office of Homeland Security | Coordinate, maintain and administer homeland security practices within the state and region. | Existing | |
| Local Cable TV and Radio Stations | Media | Provide traffic reports on travel conditions, traffic and travel advisory, incident and special events and other transportation related news services to the traveling public through radio, TV and other media. | Existing | |
| Mississippi Tax Commission | Commercial Vehicle Databases | A database for commercial vehicle tax records. | Existing | |
| Gulf Regional Planning Commission | GRPC | Provide traffic forecast and demand management for the Gulf region. | Existing | |
| | GRPC MPO Databases | Databases for all transportation related data in the Gulf regions. | Existing | |
| Port Authority | Port Authority Facilities | Use scales to determine cargo weight and related cargo restrictions, fees, etc, and also perform inspection. | Existing | |
| | Port Authority Freight Data Systems | Database system recording related freight information. | Existing | |
| Coast Transit Authority | Coast Transit Authority | Provide fixed-time and demand responsive transit services within the urbanized area. RouteMatch software is used to dispatch, schedule, administration, and/or other transit operation management activities. CTA also has the capability to automate vehicle maintenance scheduling based on vehicle and equipment condition and availability. AVL/GPS, On-board security monitoring system, electronic fare payment system, and transit signal priority system is planned. | Existing/ Planned | |
| | Coast Transit Authority Database | Collect and store transit-related data including ridership. | Existing | |

| Primary Stakeholder | System | Description | Status | Other Associated Stakeholder |
|---|---|---|---|---|
| | Coast Transit Authority Transit Vehicles | A collection of transit vehicles responding to transit dispatches, AVL/GPS, on-board security cameras, electronic fare payment system, and transit signal priority are planned. | Existing/ Planned | |
| | Coast Transit Authority Security Monitoring System | Use cameras to monitor public areas (bus stops, park and ride lots, etc.) | Existing | |
| | Coast Transit Authority Transit Card | Electronic payment media supporting electronic payment system. | Planned | |
| | Coast Transit Authority Website | Provide transit information such as transit routes and schedules, transit fares, etc. | Existing | |
| Transit Service Providers | Biloxi and Gulfport Multimodal Transit Centers | Two multi-transit centers in Biloxi and Gulfport will house all regional transit operators including Coast Transit Authority, Greyhound, AMTRAK, Taxi, and Casino Park and Ride. Information and operation will be integrated. | Planned | Biloxi, Gulfport, CTA, Greyhound, AMTRAK |
| | Multimodal Transit Center Kiosks | Kiosks are public informational displays supporting various levels of interaction and information access. | Planned | |
| | Other Transit Service Providers | Other transit service providers not explicitly identified. | Existing | |
| Local Counties and Cities | County and City Databases | Maintain/archive county or city data for a variety of uses and operates similar to a data clearinghouse. | Existing | Counties of Hancock, Harrison, & |
| | Local City/ | Responsible for maintenance and construction activities. Plan to operate | Planned | |

| Primary Stakeholder | System | Description | Status | Other Associated Stakeholder |
|---|---|---|---|---|
| | County Public Works | DMS for work zone management. | | Jackson; Cities of Bay St. Louis, D'Iberville, Gautier, Long Beach, Moss Point, Ocean Springs, Pascagoula, Pass Christian, Waveland |
| | Local City/ County TOC's | Operate city/county roadside equipment for traffic control and management, including operation of DMS. City of Gautier operates a closed-loop signal control system, and emergency vehicle signal preemption has been implemented in the city and more are planned. The City of Gautier plans to install CCTV and integrated rail signals. | Existing/ Planned | |
| | Local City /County TOC Roadside Equipment | Roadside equipment includes any and all equipment distributed on and along the roadway which monitors and controls traffic. Trailblazer directional signs are also desired for evacuation. | Existing/ Planned | |
| County Emergency Management Agencies | County Emergency Operations Centers | Provide emergency management center for countywide emergency operations and homeland security practices during major emergencies and disasters. | Existing | Counties of Hancock, Harrison & Jackson |
| City/County Parking Operators | Smart Parking Systems | Smart parking systems will include transit information signs, information kiosks during parking facility/garage construction. | Planned | |
| City/County Public Safety Agencies | City/County 911 Dispatch Centers | Receive 911 calls, and dispatch sheriff, police, fire and EMS within the jurisdiction area via communication system. Exchange mutual aid and incident information with other local agencies. CAD dispatch may be equipped. An Automated System Project (ASP) is planned in the Gulf region to bring technology solutions to local public safety agencies to enhance safety and increase productivity by providing substantial information sharing across multiple jurisdictions and information sources. Computer aided dispatch (CAD), record management system (RMS), jail management system (JMS), mobile data, and communication infrastructure will be included in the project. A Jackson County Consolidated 911 dispatch center is under study to consolidate 6 current 911 centers in Jackson County, including 4 operated by the cities of Moss Point, Gautier, Ocean Springs, and Pascagoula, and 2 operated by Jackson County, into a single facility that would dispatch police, fire, medical and animal control. A Harrison County 911 Center is planned, and will be located in the same | Existing/ Planned | Counties of Hancock, Harrison & Jackson; Cities of Bay St. Louis, D'Iberville, Gautier, Long Beach, Moss Point, Ocean Springs, Pascagoula, Pass Christian, Waveland |

| Primary Stakeholder | System | Description | Status | Other Associated Stakeholder |
|---|---|---|---|---|
| | | building with county emergency management center. | | |
| | Emergency Vehicles | A collection of emergency vehicles responding to emergency/incident dispatches. Vehicles may be equipped with communication system, signal preemption, in-vehicle navigation system, etc. | Existing | Cities of Biloxi, Gulfport, Pascagoula |
| | City/County Emergency Vehicles | A collection of emergency vehicles responding to emergency/incident dispatches. Vehicles may be equipped with communication system, signal preemption, in-vehicle navigation system, etc. | Existing | Counties of Hancock, Harrison, & Jackson; Cities of Bay St. Louis, D'Iberville, Gautier, Long Beach, Moss Point, Ocean Springs, Pascagoula, Pass Christian, Waveland |
| | Emergency Response Performance Information | Review of emergency response times (from accident scene to hospitals). | Existing | |
| Gulfport-Biloxi International Airport | Airport Information System | Use website, email, PDA, and other methods to provide traveler information such as flight delay, ground transportation schedule, maintenance, incident, and disaster response. | Existing | |
| | Airport Operations Center | Operate field equipment, and coordinate with incident/emergency management. Plan to develop an emergency telephone system for airport security. | Planned | |

| Primary Stakeholder | System | Description | Status | Other Associated Stakeholder |
|---|---|---|---|---|
| | Airport Field Equipment | Plan to deploy remotely controlled gates that control roadway access during incidents, natural disasters, security, and other emergency situations. DMS is planned to disseminate traveler information at key points of surrounding roadways. | Planned | |
| | Airport Parking Management | Electronic payment system is planned. | Planned | |
| | Airport Parking Card | Electronic payment media supporting electronic payment system. | Planned | |
| | Airport Security Monitoring System | Use CCTV to monitor airport terminals including ground transportation areas and parking ramps. CCTV system is planned to be expanded. | Existing | |
| Intermodal Rail Facilities | Intermodal Rail Freight Facility | Represent railroad intermodal facilities which transport goods between railroad and other transportation modes including truck and water. The terminals coordinate freight movement with Fleet-Freight management, gather information on traffic conditions, and to provide information on intermodal freight activities that is pertinent to traffic movement in the surrounding area. | Existing | |
| National Weather Service | National Weather Service Information | The National Weather Service (NWS) provides weather, hydrologic, and climate forecasts and warnings for the United States. NWS data and products form a national information database and infrastructure which can be used by other governmental agencies, the private sector, the public, and the global community. | Existing | |
| Private Trucking Companies | Private Trucking Companies | Own and manage commercial fleets of vehicles. | Existing | |
| | Private Trucking Companies Commercial Vehicles | Commercial vehicle equipped with the sensory, processing, storage, and communications functions necessary to support safe and efficient commercial vehicle operations. | Existing | |

| Primary Stakeholder | System | Description | Status | Other Associated Stakeholder |
|---|---|---|---|---|
| Railroad Companies | Railroad Wayside Equipment | Rail roadside equipment communicating with traffic signal systems or other traffic control devices at highway rail intersections. | Existing | |
| | Rail Companies | Coordinate with traffic management centers, and provide train schedules, maintenance schedules, and any other forecast events that will result in highway-rail intersection (HRI) closures. The information is used to develop forecasts of highway rail intersection closure times and durations that may be used in advanced traffic control strategies or to enhance the quality of traveler information. | Existing | |
| Neighboring States | Neighboring State Emergency Management Centers | Coordinate emergency management with MEMA. | Existing | Louisiana, Alabama |
| | Neighboring State Highway Patrol Dispatch Centers | Exchange mutual aid and incident information with MHP in the Gulf region. | Existing | |
| Local Traffic Generators | Event Promoters and Traffic Generators | Sharing knowledge of events (date, time, location, duration, etc.) that may impact travel on roadways with MDOT TOC and emergency service providers. | Existing | |
| | Driver | This terminator represents the human entity that operates a licensed vehicle on the roadway. | Existing | |
| | Emergency Telecommuni-cations System | This terminator represents the telecommunications systems that connect a caller with a Public Safety Answering Point (PSAP). These systems transparently support priority wireline and wireless caller access to the PSAP through 9-1-1 and other access mechanisms like 7 digit local access numbers, and motorist aid call boxes. The calls are routed to the appropriate PSAP, based on caller location when this information is available. When available, the caller's location and call-back number are also provided to the PSAP by this | Existing | |

| Primary Stakeholder | System | Description | Status | Other Associated Stakeholder |
|---|---|---|---|---|
| | | interface. | | |
| | Telecommuni-cations System for Traveler Information | This terminator provides the caller interface and voice processing (voice recognition/synthesis) that supports voice-enabled traveler telephone information systems. It provides wireline and wireless caller access to 511 systems and other telephone access mechanisms like 7 or 10 digit local access numbers. It represents the boundary of the architecture where a call is received and processed and includes voice portal capabilities in scenarios where a distinct voice portal exists between ITS Centers and telecommunications providers. The terminator gathers traveler information, alerts, and advisories from information service provider(s) and uses this information to support voice-based interactions with a traveler. | Planned | |
| | User Personal Computing Devices | This terminator refers to equipment an individual owns and can personalize with their choices for information about transportation networks. An internet-connected PC is an example. | Existing | |

THIS PAGE INTENTIONALLY LEFT BLANK

# 5. USER SERVICES AND MARKET PACKAGES

## 5.1 Identification of User Services

User services describe what should be provided from the user's perspective. Identification of user services for the Gulf Region ITS Architecture helps to reveal the problems with transportation systems and the associated needs of stakeholders, and assists in selecting market packages, which should support locally applicable user services. The National ITS Architecture defines thirty-three user services covering a wide breadth of surface transportation needs. Since many of the user services share common infrastructure elements, such as communications, they have been grouped together into eight "bundles":

(1) Travel and Traffic Management
(2) Public Transportation Management
(3) Electronic Payment
(4) Commercial Vehicle Operations
(5) Emergency Management
(6) Advanced Vehicle Safety Management
(7) Information Management
(8) Maintenance and Construction Management

Based upon the information obtained from the ITS inventory, stakeholder surveys and Mississippi Statewide ITS Architecture, the user services applicable to the Gulf Region ITS Architecture have been identified as shown in Table 5-1. A complete list of user service definitions can be obtained on the National ITS Architecture website at http://itsarch.iteris.com/itsarch/.

## 5.2 Mapping User Services to Market Packages

Market packages provide an accessible, deployment-oriented perspective to the National ITS Architecture. They are tailored to address the local region's real world transportation problems and needs. Market packages enable transportation planners and decision makers to determine

**Table 5-1. List of User Services for the Gulf Coast Region**

**Note:** User services shown as gray are not applicable to the Gulf Region ITS Architecture.

| User Service Bundle | User Service |
|---|---|
| 1. Travel and Traffic Management | 1.1 Pre-Trip Information |
| | 1.2 En-Route Driver Information |
| | 1.3 Route Guidance |
| | 1.4 Ride Matching and Reservation |
| | 1.5 Traveler Services Information |
| | 1.6 Traffic Control |
| | 1.7 Incident Management |
| | 1.8 Travel Demand Management |
| | 1.9 Emissions Testing and Mitigation |
| | 1.10 Highway Rail Intersection |
| 2. Public Transportation Management | 2.1 Public Transportation Management |
| | 2.2 En-Route Transit Information |
| | 2.3 Personalized Public Transit |
| | 2.4 Public Travel Security |
| 3. Electronic Payment | 3.1 Electronic Payment Services |
| 4. Commercial Vehicle Operations | 4.1 Commercial Vehicle Electronic Clearance |
| | 4.2 Automated Roadside Safety Inspections |
| | 4.3 On-board Safety Monitoring |
| | 4.4 Commercial Vehicle Administration Processes |
| | 4.5 Hazardous Material Security and Incident Response |
| | 4.6 Freight Mobility |
| 5. Emergency Management | 5.1 Emergency Notification and Personal Security |
| | 5.2 Emergency Vehicle Management |
| | 5.3 Disaster Response and Evacuation |
| 6. Advanced Vehicle Safety Systems | 6.1 Longitudinal Collision Avoidance |
| | 6.2 Lateral Collision Avoidance |
| | 6.3 Intersection Collision Avoidance |
| | 6.4 Vision Enhancement for Crash Avoidance |
| | 6.5 Safety Readiness |
| | 6.6 Pre-Crash Restraint Deployment |
| | 6.7 Automated Vehicle Operation |
| 7. Information Management | 7.1 Archived Data |
| 8. Maintenance and Construction Management | 8.1 Maintenance and Construction Operations |

appropriate ITS services that satisfy local and statewide needs. Market packages consist of one or more equipment packages that work together to deliver a given transportation service and the

architecture flows that connect them and other important external systems. They identify the pieces of the Physical Architecture required to implement a particular transportation service. As illustrated in Table 5-2, all eighty-five (85) market packages (in the National ITS Architecture Version 5.1) were considered for their applicability to all thirty-three (33) user services. The user services, market packages and associated mapping relationships, which are applicable for the Gulf Region ITS Architecture, have been identified through the mapping exercise.

Table 5-3 presents a list of market packages that are identified through the mapping process in Table 5-2. The market packages are grouped according to the type of ITS category they fall under, i.e., Archived Data Management, Advanced Public Transportation Systems, etc. As illustrated in Table 5-3, some of the market packages do not specifically address the user services identified for the Gulf Region ITS Architecture, and they are not applicable to the implementation of the existing and proposed ITS systems in the Gulf Coast region. Therefore, customization of the market packages is necessary so that the market packages that are inappropriate for the Gulf Region ITS Architecture are eliminated. Descriptions of the market packages can be found on the National ITS Architecture website at http://itsarch.iteris.com/itsarch/.

## Table 5-2. User Services Mapping to Market Packages

| | **Market Packages:** The market packages provide an accessible, deployment oriented perspective to the national architecture. They are tailored to fit - separately or in combination - real world transportation problems and needs. Market packages collect together one or more Equipment Packages that must work together to deliver a given transportation service and the Architecture Flows that connect them and other important external systems. In other words, they identify the pieces of the Physical Architecture that are required to implement a particular transportation service. | 1.1 Pre-Trip Travel Information | 1.2 En-Route Driver Information | 1.3 Route Guidance | 1.4 Ride Matching And Reservation | 1.5 Traveler Services Information | 1.6 Traffic Control | 1.7 Incident Management | 1.8 Travel Demand Management | 1.9 Emissions Testing And Mitigation | 1.10 Highway Rail Intersection | 2.1 Public Transportation Management | 2.2 En-route Transit Information | 2.3 Personalized Public Transit | 2.4 Public Travel Security | 3.1 Electronic Payment Services | 4.1 Commercial Vehicle Electronic Clearance | 4.2 Automated Roadside Safety Inspection | 4.3 On-board Safety And Security Monitoring | 4.4 Commercial Vehicle Administrative Processes | 4.5 Hazardous Materials Security And Incident Response | 4.6 Freight Mobility | 5.1 Emergency Notification And Personal Security | 5.2 Emergency Vehicle Management | 5.3 Disaster Response And Evacuation | 6.1 Longitudinal Collision Avoidance | 6.2 Lateral Collision Avoidance | 6.3 Intersection Collision Avoidance | 6.4 Vision Enhancement For Crash Avoidance | 6.5 Safety Readiness | 6.6 Pre-crash Restraint Deployment | 6.7 Automated Vehicle Operation | 7.1 Archived Data | 8.1 Maintenance And Construction Operations |
|---|---|---|---|---|---|---|---|---|---|---|---|---|---|---|---|---|---|---|---|---|---|---|---|---|---|---|---|---|---|---|---|---|---|---|
| AD | **ITS Data Mart** | | | | | | | | | | | | | | | | | | | | | | | | | | | | | | | | X | |
| AD | **ITS Data Warehouse** | | | | | | | | | | | | | | | | | | | | | | | | | | | | | | | | X | |
| AD | ITS Virtual Data Warehouse | | | | | | | | | | | | | | | | | | | | | | | | | | | | | | | | X | |
| APTS | **Transit Vehicle Tracking** | | | | | | | | | | | X | X | | X | | | | | | | | | | | | | | | | | | | |
| APTS | **Transit Fixed Route Operations** | | | | | | | | | | | X | | | | | | | | | | | | | | | | | | | | | | |
| APTS | **Demand Response Transit Operations** | | | | | | | | | | | X | | X | | | | | | | | | | | | | | | | | | | | |
| APTS | **Transit Passenger and Fare Management** | | | | | | | | X | | | X | | | | X | | | | | | | | | | | | | | | | | | |
| APTS | **Transit Security** | | | | | | | | | | | X | | | X | | | | | | | | | | | | | | | | | | | |
| APTS | **Transit Maintenance** | | | | | | | | | | | X | | | | | | | | | | | | | | | | | | | | | | |
| APTS | **Multi--Modal Coordination** | | | | | | X | | | | | X | | | | | | | | | | | | | | | | | | | | | | |
| APTS | **Transit Traveler Information** | | | | | | | | | | | X | X | | | X | | | | | | | | | | | | | | | | | | |
| ATIS | **Broadcast Traveler Information** | X | X | | | | | | | | | | | | | | | | | | | | | | | | | | | | | | | |
| ATIS | **Interactive Traveler Information** | X | X | | X | X | | X | | | | | | | | X | | | | | | | | | | | | | | | | | | |
| ATIS | Autonomous Route Guidance | | | X | | | | | | | | | | | | | | | | | | | | | | | | | | | | | | |
| ATIS | Dynamic Route Guidance | | | X | | X | | | | | | | | | | | | | | | | | | | | | | | | | | | | |
| ATIS | ISP Based Route Guidance | X | | X | | | | | | | | | | | | | | | | | | | | | | | | | | | | | | |
| ATIS | Integrated Transportation Management/Route Guidance | X | | X | | | | | | | | | | | | | | | | | | | | | | | | | | | | | | |
| ATIS | Yellow Pages and Reservation | X | | | | X | | | | | | | | | | X | | | | | | | | | | | | | | | | | | |
| ATIS | Dynamic Ridesharing | | | | X | | | | X | | | | | X | | | | | | | | | | | | | | | | | | | | |
| ATIS | In-Vehicle Signing | | X | | | | | | | | | | | | | | | | | | | | | | | | | | | | | | | |
| ATMS | **Network Surveillance** | | | | | | X | X | | | | | | | | | | | | | | | | | | | | | | | | | | |
| ATMS | Probe Surveillance | | | | | | X | | | | | | | | | | | | | | | | | | | | | | | | | | | |
| ATMS | **Surface Street Control** | | | | | | X | X | | | X | | | | | | | | | | | | | | | | | | | | | | | |
| ATMS | **Freeway Control** | | | | | | X | X | | | | | | | | | | | | | | | | | | | | | | | | | | |
| ATMS | HOV Lane Management | | | | | | X | | X | | | | | | | | | | | | | | | | | | | | | | | | | |
| ATMS | **Traffic Information Dissemination** | | X | | | | X | X | | | | | | | | | | | | | | | | | | | | | | | | | | |
| ATMS | **Regional Traffic Control** | | | | | | X | | | | | | | | | | | | | | | | | | | | | | | | | | | |
| ATMS | **Traffic Incident Management System** | | | | | | | X | | | | | | | | | | | | | | | X | X | | | | | | | | | | |
| ATMS | Traffic Forecast and Demand Management | | | | | | X | | X | | | | | | | | | | | | | | | | | | | | | | | | | |
| ATMS | Electronic Toll Collection | | | | | | | | X | | | | | | | X | | | | | | | | | | | | | | | | | | |
| ATMS | **Emissions Monitoring and Management** | | | | | | | | X | X | | | | | | | | | | | | | | | | | | | | | | | | |
| ATMS | Virtual TMC an Smart Probe Data | | X | | | | X | | | | | | | | | | | | | | | | | | | | | | | | | | | X |
| ATMS | **Standard Railroad Grade Crossing** | | | | | | | | | | X | | | | | | | | | | | | | | | | | | | | | | | |
| ATMS | **Advanced Railroad Grade Crossing** | | | | | | | | | | X | | | | | | | | | | | | | | | | | | | | | | | |
| ATMS | **Railroad Operations Coordination** | | | | | | | | | | X | | | | | | | | | | | | | | | | | | | | | | | |
| ATMS | **Parking Facility Management** | | | | | | | | | | | | | | X | | | | | | | | | | | | | | | | | | | |
| ATMS | Regional Parking Management | | | | | | | | X | | | | | | | | | | | | | | | | | | | | | | | | | |
| ATMS | **Reversible Lane Management** | | | | | | X | | | | | | | | | | | | | | | | | | | | | | | | | | | |
| ATMS | **Speed Monitoring** | | | | | | X | | | | | | | | | | | | | | | | | | | | | | | | | | | X |
| ATMS | **Drawbridge Management** | | | | | | X | | | | | | | | | | | | | | | | | | | | | | | | | | | |
| ATMS | **Roadway Closure Management** | | | | | | X | X | | | X | | | | | | | | | | | X | | X | | | | | | | | | | |
| AVSS | Vehicle Safety Monitoring | | | | | | | | | | | | | | | | | | | | | | | | | | | | X | | | | | |
| AVSS | Driver Safety Monitoring | | | | | | | | | | | | | | | | | | | | | | | | | | | | X | | | | | |
| AVSS | Longitudinal Safety Warning | | | | | | | | | | | | | | | | | | | | | | | | X | | | | X | | | | | |
| AVSS | Lateral Safety Warning | | | | | | | | | | | | | | | | | | | | | | | | | X | | | X | | | | | |
| AVSS | Intersection Safety Warning | | | | | | | | | | | | | | | | | | | | | | | | | | X | | X | | | | | |
| AVSS | Pre-Crash Restraint Requirement | | | | | | | | | | | | | | | | | | | | | | | | | | | | | X | | | | |
| AVSS | Driver Visibility Improvement | | | | | | | | | | | | | | | | | | | | | | | | | | | X | | | | | | |
| AVSS | Advanced Vehicle Longitudinal Control | | | | | | | | | | | | | | | | | | | | | | | | X | | | | | | | | | |
| AVSS | Advanced Vehicle Lateral Control | | | | | | | | | | | | | | | | | | | | | | | | | X | | | | | | | | |
| AVSS | Intersection Collision Avoidance | | | | | | | | | | | | | | | | | | | | | | | | | | X | | | | | | | |
| AVSS | Automated Highway System | | | | | | | | | | | | | | | | | | | | | | | | | | | | | | | X | | |
| CVO | Fleet Administration | | | | | | | | | | | | | | | | | | | | X | | | | | | | | | | | | | |
| CVO | Freight Administration | | | | | | | | | | | | | | | | | | | | X | | | | | | | | | | | | | |
| CVO | **Electronic Clearance** | | | | | | | | | | | | | | | | X | | | X | | | | | | | | | | | | | | |
| CVO | **CV Administrative Processes** | | | | | | | | | | | | | | | | X | | | X | | X | | | | | | | | | | | | |
| CVO | International Border Electronic Clearance | | | | | | | | | | | | | | | | X | | | X | | X | | | | | | | | | | | | |
| CVO | **Weigh In Motion** | | | | | | | | | | | | | | | | X | | | | | | | | | | | | | | | | | |
| CVO | **Roadside CVO Safety** | | | | | | | | | | | | | | | | X | X | | | | X | | | | | | | | | | | | |
| CVO | On-board CVO and Freight Safety & Security | | | | | | | | | | | | | | | | | | X | | | | | | | | | | | | | | | |
| CVO | CVO Fleet Maintenance | | | | | | | | | | | | | | | | | X | X | | | X | | | | | | | | | | | | |
| CVO | **HAZMAT Management** | | | | | | | | | | | | | | | | | | | | X | X | X | X | | | | | | | | | | |
| CVO | Roadside HAZMAT Security Detection and Mitigation | | | | | | | | | | | | | | | | | | | | X | X | | | | | | | | | | | | |
| CVO | CV Driver Security Authentication | | | | | | | | | | | | | | | | | | X | | X | | | | | | | | | | | | | |
| CVO | Freight Assignment Tracking | | | | | | | | | | | | | | | | | | X | | X | X | | | | | | | | | | | | |
| EM | **Emergency Call-Taking and Dispatch** | | | | | | | | | | | | | | | | | | | | X | | | X | | | | | | | | | | |
| EM | **Emergency Routing** | | | X | | | X | | | | | | | | | | | | | | | | | X | | | | | | | | | | |
| EM | Mayday and Alarms Support | | | | | | | | | | | | | | | | | | | | | | X | | | | | | | | | | | |
| EM | **Roadway Service Patrols** | | | | | | | | | | | | | | | | | | | | | | | X | | | | | | | | | | |
| EM | **Transportation Infrastructure Protection** | | | | | | | | | | | | | | | | | | | | | | X | | | | | | | | | | | |
| EM | **Wide-Area Alert** | | | | | | | | | | | | | | | | | | | | | | X | | | | | | | | | | | |
| EM | **Early Warning System** | | | | | | | | | | | | | | | | | | | | | | | | X | | | | | | | | | |
| EM | **Disaster Response and Recovery** | | | | | | | | | | | | | | | | | | | | | | | | X | | | | | | | | | |
| EM | **Evacuation and Reentry Management** | | | | | | | | | | | | | | | | | | | | | | | | X | | | | | | | | | |
| EM | **Disaster Traveler Information** | | | | | | | | | | | | | | | | | | | | | | | | X | | | | | | | | | |
| MCO | **Maintenance and Construction Vehicle and Equipment Tracking** | | | | | | | | | | | | | | | | | | | | | | | | | | | | | | | | | X |
| MCO | **Maintenance and Construction Vehicle Maintenance** | | | | | | | | | | | | | | | | | | | | | | | | | | | | | | | | | X |
| MCO | **Road Weather Data Collection** | | | | | | | | | | | | | | | | | | | | | | | | | | | | | | | | | X |
| MCO | **Weather Information Processing and Distribution** | X | | | | | | | | | | | | | | | | | | | | | | | | | | | | | | | | X |
| MCO | **Roadway Automated Treatment** | | | | | | | | | | | | | | | | | | | | | | | | | | | | | | | | | X |
| MCO | **Winter Maintenance** | | | | | | | | | | | | | | | | | | | | | | | | | | | | | | | | | X |
| MCO | **Roadway Maintenance and Construction** | | | | | | | | | | | | | | | | | | | | | | | | | | | | | | | | | X |
| MCO | **Work Zone Management** | | | | | | | | | | | | | | | | | | | | | | | | | | | | | | | | | X |
| MCO | **Work Zone Safety Monitoring** | | | | | | | | | | | | | | | | | | | | | | | | | | | | | | | | | X |
| MCO | **Maintenance and Construction Activity Coordination** | | | | | | | | | | | | | | | | | | | | | | | X | | | | | | | | | | X |

Note: Items colored in Gray indicated that the items are not applicable to the GRPC ITS Architecture.

**Table 5-3. List of Market Packages for the Gulf Region ITS Architecture**

| Category | Market Package | Market Package Name | Status |
|---|---|---|---|
| Archived Data Management (AD) | AD1 | ITS Data Mart | Existing |
| | AD2 | ITS Data Warehouse | Existing |
| Advanced Public Transportation Systems (APTS) | APTS1 | Transit Vehicle Tracking | Planned |
| | APTS2 | Transit Fixed Route Operations | Existing |
| | APTS3 | Demand Response Transit Operations | Existing |
| | APTS4 | Transit Passenger and Fare Management | Planned |
| | APTS5 | Transit Security | Existing |
| | APTS6 | Transit Maintenance | Existing |
| | APTS7 | Multi-Modal Coordination | Planned |
| | APTS8 | Transit Traveler Information | Existing |
| Advanced Traveler Information Systems (ATIS) | ATIS1 | Broadcast Traveler Information | Existing |
| | ATIS2 | Interactive Traveler Information | Planned |
| Advanced Traffic Management Systems (ATMS) | ATMS01 | Network Surveillance | Existing |
| | ATMS03 | Surface Street Control | Existing |
| | ATMS06 | Traffic Information Dissemination | Existing |
| | ATMS07 | Regional Traffic Control | Planned |
| | ATMS08 | Traffic Incident Management System | Existing |
| | ATMS09 | Traffic Forecast and Demand Management | Existing |
| | ATMS13 | Standard Railroad Grade Crossing | Existing |
| | ATMS14 | Advanced Railroad Grade Crossing | Planned |
| | ATMS15 | Railroad Operations Coordination | Planned |
| | ATMS16 | Parking Facility Management | Planned |
| | ATMS18 | Reversible Lane Management | Planned |
| | ATMS19 | Speed Monitoring | Planned |
| | ATMS20 | Drawbridge Management | Existing |
| | ATMS21 | Roadway Closure Management | Planned |
| Commercial Vehicle Operations (CVO) | CVO03 | Electronic Clearance | Existing |
| | CVO04 | CV Administrative Processes | Existing |
| | CVO06 | Weigh In Motion | Existing |
| | CVO07 | Roadside CVO Safety | Existing |
| | CVO10 | HAZMAT Management | Planned |
| Emergency Management (EM) | EM01 | Emergency Call-Taking and Dispatch | Existing |
| | EM02 | Emergency Routing | Existing |
| | EM04 | Roadway Service Patrols | Planned |
| | EM05 | Transportation Infrastructure Protection | Existing |
| | EM06 | Wide-Area Alert | Existing |
| | EM07 | Early Warning System | Existing |
| | EM08 | Disaster Response and Recovery | Existing |
| | EM09 | Evacuation and Reentry Management | Existing |
| | EM10 | Disaster Traveler Information | Existing |
| Maintenance & Construction Management (MC) | MC01 | Maintenance and Construction Vehicle and Equipment Tracking | Planned |
| | MC02 | Maintenance and Construction Vehicle Maintenance | Existing |

| Category | Market Package | Market Package Name | Status |
|---|---|---|---|
| | MC03 | Road Weather Data Collection | Planned |
| | MC04 | Weather Information Processing and Distribution | Planned |
| | MC07 | Roadway Maintenance and Construction | Existing |
| | MC08 | Work Zone Management | Existing |
| | MC10 | Maintenance and Construction Activity Coordination | Planned |

## 5.3 Customization of Market Packages

Market packages, customized for the specific requirements of each stakeholder, represent the information that will be exchanged between specific stakeholder elements. The above market packages selected for the Gulf Region ITS Architecture were customized to correspond with the existing ITS system elements and operations as well as future deployment and planned operations. Customization of market packages requires tailoring the elements (subsystems or terminators) in these market packages, along with associated architecture flows. In addition, architecture flows deemed by the stakeholders as not relevant to the deployment need to be removed. The results of such customization are summarized in terms of ITS elements and their deployment status as presented in Table 5-4. A comprehensive listing of the completed results of the customization is detailed in the Turbo Architecture database.

**Table 5-4. List of Market Packages by Architecture Elements**

| Market Package | Market Package Name | Associated Element | Status |
|---|---|---|---|
| AD1 | ITS Data Mart | Biloxi and Gulfport Multimodal Transit Center | Planned |
| | | City of Biloxi Database | Planned |
| | | City of Biloxi Public Works | Existing |
| | | City of Biloxi TOC | Existing |
| | | City of Biloxi TOC Roadside Equipment | Existing |
| | | City of Gulfport Public Works | Existing |
| | | City of Gulfport Database | Existing |
| | | City of Gulfport TOC | Existing |
| | | City of Gulfport TOC Roadside Equipment | Existing |
| | | City of Pascagoula Database | Existing |
| | | City of Pascagoula Public Works | Existing |
| | | City of Pascagoula TOC | Existing |
| | | City/County 911 Dispatch Centers | Existing |
| | | Coast Transit Authority | Existing |

| Market Package | Market Package Name | Associated Element | Status |
|---|---|---|---|
| | | Coast Transit Authority Database | Existing |
| | | County Emergency Operations Centers | Existing |
| | | Gulfport-Biloxi International Airport Operations Center | Planned |
| | | Local City/County Databases | Existing |
| | | Local City/County Public Works | Existing |
| | | Local City/County TOCs | Existing |
| | | Mississippi Public Service Commission SAFETYNET | Existing |
| | | Mississippi State Tax Commission Commercial Vehicle Database | Existing |
| | | Port Authority Freight Data Systems | Existing |
| | | | |
| AD2 | ITS Data Warehouse | City/County 911 Dispatch Centers | Existing |
| | | Emergency Response Performance Information | Existing |
| | | GRPC MPO Databases | Existing |
| | | MDOT Accident Database | Planned |
| | | MDOT District 6 Maintenance and Construction Office | Existing |
| | | MDOT District 6 TOC | Existing |
| | | MDOT District 6 Traffic Sensors | Existing |
| | | MDOT ExpressPass Permitting System | Existing |
| | | MDOT Highway Performance Monitoring System (HPMS) | Existing |
| | | MHP District 8 Offices | Existing |
| | | MHP Dispatch Centers | Existing |
| | | Mississippi Public Service Commission SAFETYNET | Existing |
| | | Mississippi State Tax Commission Commercial Vehicle Database | Existing |
| | | | |
| APTS1 | Transit Vehicle Tracking | Biloxi and Gulfport Multimodal Transit Centers | Planned |
| | | Coast Transit Authority | Existing |
| | | Coast Transit Authority Transit Vehicles | Existing |
| | | Gulfport-Biloxi International Airport Information System | Existing |
| | | | |
| APTS2 | Transit Fixed-Route Operations | Biloxi and Gulfport Multimodal Transit Centers | Planned |
| | | Coast Transit Authority | Existing |
| | | Coast Transit Authority Transit Vehicles | Existing |
| | | Gulfport-Biloxi International Airport Information System | Existing |
| | | | |
| APTS3 | Demand Response Transit Operations | Coast Transit Authority | Existing |
| | | Coast Transit Authority Transit Vehicles | Existing |
| | | | |
| APTS4 | Transit Passenger and Fare Management | Biloxi and Gulfport Multimodal Transit Centers | Planned |
| | | Biloxi and Gulfport Multimodal Transit Centers Kiosks | Planned |
| | | Coast Transit Authority | Existing |
| | | Coast Transit Authority Transit Vehicles | Existing |
| | | Coast Transit Authority Transit Card | Planned |
| | | | |
| APTS5 | Transit Security | Biloxi and Gulfport Multimodal Transit Centers | Planned |
| | | City/County 911 Dispatch Centers | Existing |
| | | Coast Transit Authority | Existing |
| | | Coast Transit Authority Transit Vehicles | Existing |
| | | Coast Transit Authority Security Monitoring System | Existing |
| | | County Emergency Operations Centers | Existing |
| | | Gulfport-Biloxi International Airport Operations Center | Planned |
| | | Gulfport-Biloxi International Airport Security Monitoring System | Existing |

| Market Package | Market Package Name | Associated Element | Status |
|---|---|---|---|
| | | MHP Dispatch Centers | Existing |
| | | | |
| APTS6 | Transit Maintenance | Coast Transit Authority | Existing |
| | | Coast Transit Authority Transit Vehicles | Existing |
| | | | |
| APTS7 | Multi-modal Coordination | AMTRAK | Existing |
| | | Biloxi and Gulfport Multimodal Transit Centers | Planned |
| | | City of Biloxi TOC | Existing |
| | | City of Biloxi TOC Roadside Equipment | Existing |
| | | City of Gulfport TOC | Existing |
| | | City of Gulfport TOC Roadside Equipment | Existing |
| | | Coast Transit Authority | Existing |
| | | Coast Transit Authority Transit Vehicles | Existing |
| | | Greyhound | Existing |
| | | Local City/County TOCs | Existing |
| | | Local City/County TOCs Roadside Equipment | Existing |
| | | MDOT District 6 TOC | Existing |
| | | MDOT District 6 Traffic Signal Systems | Existing |
| | | Other Transit Service Providers | Existing |
| | | | |
| APTS8 | Transit Traveler Information | Biloxi and Gulfport Multimodal Transit Centers | Planned |
| | | Biloxi and Gulfport Multimodal Transit Centers Kiosks | Planned |
| | | Coast Transit Authority | Existing |
| | | Coast Transit Authority Website | Existing |
| | | Gulfport-Biloxi International Airport Information System | Existing |
| | | Other Transit Service Providers | Existing |
| | | User Personal Computing Devices | Existing |
| | | | |
| ATIS1 | Broadcast Traveler Information | Biloxi and Gulfport Multimodal Transit Centers | Planned |
| | | Biloxi and Gulfport Multimodal Transit Centers Kiosks | Planned |
| | | City of Biloxi Public Affairs | Existing |
| | | City of Biloxi Website | Existing |
| | | Coast Transit Authority Website | Existing |
| | | Gulfport-Biloxi International Airport Information System | Existing |
| | | MDOT MSTraffic.com | Existing |
| | | Media | Existing |
| | | Mississippi Road/Weather Conditions Website | Existing |
| | | MDOT Traveler Information Repository | Existing |
| | | User Personal Computing Devices | Existing |
| | | | |
| ATIS2 | Interactive Traveler Information | MDOT Statewide 511 System | Planned |
| | | MDOT Traveler Information Repository | Planned |
| | | Telecommunications Systems for Traveler Information | Planned |
| | | | |
| ATMS01 | Network Surveillance | City of Biloxi TOC | Existing |
| | | City of Biloxi TOC Roadside Equipment | Existing |
| | | City of Gulfport TOC | Existing |
| | | City of Gulfport TOC Roadside Equipment | Existing |
| | | Local City/County TOCs | Existing |
| | | Local City/County TOCs Roadside Equipment | Existing |
| | | MDOT District 6 TOC | Existing |
| | | MDOT District 6 Traffic Sensors | Existing |

| Market Package | Market Package Name | Associated Element | Status |
|---|---|---|---|
| | | MDOT District 6 Video Surveillance Equipment | Existing |
| | | MDOT MSTraffic.com | Existing |
| | | | |
| ATMS03 | Surface Street Control | City of Biloxi TOC | Existing |
| | | City of Biloxi TOC Roadside Equipment | Existing |
| | | City of Gulfport TOC | Existing |
| | | City of Gulfport TOC Roadside Equipment | Existing |
| | | City of Pascagoula TOC | Existing |
| | | City of Pascagoula TOC Roadside Equipment | Existing |
| | | Local City/County TOCs | Existing |
| | | Local City/County TOCs Roadside Equipment | Existing |
| | | MDOT District 6 TOC | Existing |
| | | MDOT District 6 Traffic Signal Systems | Existing |
| | | MDOT District 6 Video Surveillance Equipment | Existing |
| | | MDOT District 6 Traffic Sensors | Existing |
| | | | |
| ATMS06 | Traffic Information Dissemination | City of Biloxi TOC | Existing |
| | | City of Biloxi TOC Roadside Equipment | Existing |
| | | City of Gulfport TOC | Existing |
| | | City of Gulfport TOC Roadside Equipment | Existing |
| | | City of Pascagoula TOC | Existing |
| | | City of Pascagoula TOC Roadside Equipment | Existing |
| | | Gulfport-Biloxi International Airport Field Equipment | Planned |
| | | Gulfport-Biloxi International Airport Operations Center | Planned |
| | | Local City/County TOCs | Existing |
| | | Local City/County TOCs Roadside Equipment | Existing |
| | | MDOT District 6 TOC | Existing |
| | | MDOT District 6 Portable Dynamic Message Signs | Existing |
| | | MDOT District 6 Highway Advisory Radio | Planned |
| | | MDOT MSTraffic.com | Existing |
| | | | |
| ATMS07 | Regional Traffic Control | City of Biloxi TOC | Existing |
| | | City of Gulfport TOC | Existing |
| | | City of Pascagoula TOC | Existing |
| | | Local City/County TOCs | Existing |
| | | MDOT District 6 TOC | Existing |
| | | MDOT Statewide TMC | Existing |
| | | | |
| ATMS08 | Traffic Incident Management System | Biloxi and Gulfport Multimodal Transit Centers | Planned |
| | | City of Biloxi Emergency Vehicles | Existing |
| | | City of Biloxi Public Affairs | Existing |
| | | City of Biloxi TOC | Existing |
| | | City of Biloxi TOC Roadside Equipment | Existing |
| | | City of Gulfport TOC | Existing |
| | | City of Gulfport TOC Roadside Equipment | Existing |
| | | City of Gulfport Emergency Vehicles | Existing |
| | | City of Pascagoula TOC | Existing |
| | | City of Pascagoula Emergency Vehicles | Existing |
| | | City/County 911 Dispatch Centers | Existing |
| | | City/County Emergency Vehicles | Existing |
| | | Coast Transit Authority | Existing |
| | | County Emergency Operations Center | Existing |

| Market Package | Market Package Name | Associated Element | Status |
|---|---|---|---|
| | | Event Promoters and Traffic Generators | Existing |
| | | Gulfport-Biloxi International Airport Field Equipment | Planned |
| | | Gulfport-Biloxi International Airport Information System | Existing |
| | | Gulfport-Biloxi International Airport Operations Center | Planned |
| | | Intermodal Rail Freight Facility | Existing |
| | | Local City/County TOCs | Existing |
| | | MDOT District 6 Highway Service Patrol Vehicles | Planned |
| | | MDOT District 6 Maintenance and Construction Offices | Existing |
| | | MDOT District 6 Video Surveillance Equipment | Existing |
| | | MDOT District 6 TOC | Existing |
| | | MDOT MSTraffic.com | Existing |
| | | MDOT Statewide 511 System | Planned |
| | | Media | Existing |
| | | MHP Dispatch Centers | Existing |
| | | MHP Emergency Vehicles | Existing |
| | | Mississippi Department of Environmental Quality | Existing |
| | | Neighboring State Highway Patrol Dispatch Centers | Existing |
| | | Rail Companies | Existing |
| | | MDOT Traveler Information Repository | Planned |
| | | | |
| ATMS09 | Traffic Forecast and Demand Management | Biloxi and Gulfport Multimodal Transit Center | Planned |
| | | City of Biloxi TOC | Existing |
| | | City of Gulfport TOC | Existing |
| | | City of Pascagoula TOC | Existing |
| | | Coast Transit Authority | Existing |
| | | GRPC MPO | Existing |
| | | Gulfport-Biloxi International Airport Operations Center | Planned |
| | | Local City/County TOCs | Existing |
| | | MDOT District 6 TOC | Existing |
| | | | |
| ATMS13 | Standard Railroad Grade Crossing | City of Biloxi TOC | Existing |
| | | City of Biloxi TOC Roadside Equipment | Existing |
| | | City of Gulfport TOC | Existing |
| | | City of Gulfport TOC Roadside Equipment | Existing |
| | | Local City/County TOCs | Existing |
| | | Local City/County TOCs Roadside Equipment | Existing |
| | | MDOT District 6 TOC | Existing |
| | | MDOT District 6 Traffic Signal System | Existing |
| | | Rail Companies | Existing |
| | | Railroad Wayside Equipment | Existing |
| | | | |
| ATMS14 | Advanced Railroad Grade Crossing | MDOT District TOC | Existing |
| | | MDOT District 6 Railroad Crossing Control | Existing |
| | | Rail Companies | Existing |
| | | Railroad Wayside Equipment | Existing |
| | | | |
| ATMS15 | Railroad Operations Coordination | MDOT District 6 TOC | Existing |
| | | Rail Companies | Existing |
| | | | |
| ATMS16 | Parking Facility Management | City of Pascagoula Parking Management | Planned |
| | | Driver | Existing |
| | | Gulfport-Biloxi International Airport Parking Card | Planned |

| Market Package | Market Package Name | Associated Element | Status |
|---|---|---|---|
| | | Gulfport-Biloxi International Airport Parking Management | Planned |
| | | Smart Parking Systems | Planned |
| | | | |
| ATMS18 | Reversible Lane Management | City of Pascagoula TOC | Existing |
| | | City of Pascagoula TOC Roadside Equipment | Existing |
| | | | |
| ATMS19 | Speed Monitoring | City of Biloxi Police | Existing |
| | | City of Biloxi Police Red Light Running Cameras | Planned |
| | | City of Gulfport Public Works | Existing |
| | | City of Gulfport Public Works Field Devices | Existing |
| | | Driver | Existing |
| | | MDOT District 6 Speed Warning System | Planned |
| | | MHP District 8 Offices | Existing |
| | | | |
| ATMS20 | Drawbridge Management | Driver | Existing |
| | | MDOT District 6 Drawbridge Systems | Existing |
| | | MDOT District 6 TOC | Existing |
| | | | |
| ATMS21 | Roadway Closure Management | City of Pascagoula TOC | Existing |
| | | City of Pascagoula TOC Roadside Equipment | Existing |
| | | City/County 911 Dispatch Centers | Existing |
| | | County Emergency Operations Center | Existing |
| | | Gulfport-Biloxi International Airport Field Equipment | Planned |
| | | Gulfport-Biloxi International Airport Operations Center | Planned |
| | | MEMA Emergency Operations Center | Existing |
| | | | |
| CVO03 | Electronic Clearance | MDOT District 6 PrePass System | Existing |
| | | MHP District 8 Offices | Existing |
| | | Private Trucking Companies | Existing |
| | | Private Trucking Companies Commercial Vehicles | Existing |
| | | | |
| CVO04 | CV Administrative Processes | MDOT ExpressPass Permitting System | Existing |
| | | Mississippi Public Service Commission SAFETYNET | Existing |
| | | Mississippi State Tax Commission Commercial Vehicle Database | Existing |
| | | Private Trucking Companies | Existing |
| | | | |
| CVO06 | Weigh-In-Motion | MDOT District 6 Weigh-in-Motion Stations | Existing |
| | | Port Authority Facilities | Existing |
| | | Private Trucking Companies Commercial Vehicles | Existing |
| | | | |
| CVO07 | Roadside CVO Safety | MDOT District 6 PrePass System | Existing |
| | | MDOT District 6 Weigh-in-Motion Stations | Existing |
| | | MHP District 8 Offices | Existing |
| | | Private Trucking Companies | Existing |
| | | Private Trucking Companies Commercial Vehicles | Existing |
| | | | |
| CVO10 | HAZMAT Management | MDOT District 6 TOC | Existing |
| | | County Emergency Operations Centers | Existing |
| | | MHP Dispatch Centers | Existing |
| | | Mississippi Department of Environmental Quality | Existing |
| | | Private Trucking Companies | Existing |
| | | | |

| Market Package | Market Package Name | Associated Element | Status |
|---|---|---|---|
| EM01 | Emergency Call-Taking and Dispatch | *HP Cellular Phone System | Existing |
| | | Biloxi and Gulfport Multimodal Transit Centers | Planned |
| | | City of Biloxi Emergency Vehicles | Existing |
| | | City of Gulfport Emergency Vehicles | Existing |
| | | City of Pascagoula Emergency Vehicles | Existing |
| | | City/County Emergency Vehicles | Existing |
| | | City/County 911 Dispatch Centers | Existing |
| | | Coast Transit Authority | Existing |
| | | County Emergency Operations Center | Existing |
| | | Emergency Telecommunications System | Existing |
| | | Gulfport-Biloxi International Airport Operations Center | Planned |
| | | MDOT Cellular Phone System for Incident Reporting | Planned |
| | | MDOT District 6 Motorists Assistance Call Boxes | Existing |
| | | MHP Dispatch Centers | Existing |
| | | MHP Emergency Vehicles | Existing |
| | | MHP District 8 Offices | Existing |
| | | Mississippi Department of Environmental Quality | Existing |
| | | Neighboring State Highway Patrol Dispatch Centers | Existing |
| | | | |
| EM02 | Emergency Routing | City of Biloxi Emergency Vehicles | Existing |
| | | City of Biloxi TOC Roadside Equipment | Existing |
| | | City of Gulfport Emergency Vehicles | Existing |
| | | City of Gulfport TOC Roadside Equipment | Existing |
| | | City of Pascagoula Emergency Vehicles | Existing |
| | | City of Pascagoula TOC Roadside Equipment | Existing |
| | | City/County 911 Dispatch Centers | Existing |
| | | City/County Emergency Vehicles | Existing |
| | | Local City/County TOCs Roadside Equipment | Existing |
| | | MDOT District 6 Traffic Signal Systems | Existing |
| | | MHP Dispatch Centers | Existing |
| | | MHP Emergency Vehicles | Existing |
| | | | |
| EM04 | Roadway Service Patrols | MDOT District 6 TOC | Existing |
| | | MDOT District 6 Highway Service Patrol Vehicles | Planned |
| | | | |
| EM05 | Transportation Infrastructure Protection | MDOT District 6 Security Monitoring System | Existing |
| | | MDOT District 6 TOC | Existing |
| | | | |
| EM06 | Wide-Area Alert | Biloxi and Gulfport Multimodal Transit Centers | Planned |
| | | Biloxi and Gulfport Multimodal Transit Center Kiosks | Planned |
| | | City of Biloxi Public Affairs | Existing |
| | | City of Biloxi TOC | Existing |
| | | City of Gulfport TOC | Planned |
| | | City of Pascagoula TOC | Existing |
| | | City/County 911 Dispatch Centers | Existing |
| | | Coast Transit Authority | Existing |
| | | County Emergency Operations Centers | Existing |
| | | Gulfport-Biloxi International Airport Operations Center | Planned |
| | | Gulfport-Biloxi International Airport Information System | Existing |
| | | Local City/County TOCs | Existing |
| | | MDOT District 6 Highway Advisory Radio | Planned |
| | | MDOT District 6 Portable Dynamic Message Signs | Existing |

| Market Package | Market Package Name | Associated Element | Status |
|---|---|---|---|
| | | MDOT District 6 TOC | Existing |
| | | MDOT MSTraffic.com | Existing |
| | | MDOT Statewide 511 System | Planned |
| | | MDOT Traveler Information Repository | Existing |
| | | MEMA Emergency Operations Center | Existing |
| | | MHP District 8 Offices | Existing |
| | | MHP Dispatch Centers | Existing |
| | | Mississippi Bureau of Investigation | Existing |
| | | Mississippi Emergency Management Agency | Existing |
| | | Mississippi Office of Homeland Security | Existing |
| | | Mississippi Road/Weather Conditions Website | Existing |
| | | Neighboring State Emergency Management Centers | Existing |
| | | Telecommunications Systems for Traveler Information | Existing |
| | | User Personal Computing Devices | Existing |
| | | Weather Service | Existing |
| | | | |
| EM07 | Early Warning System | Biloxi and Gulfport Multimodal Transit Centers | Existing |
| | | Coast Transit Authority | Existing |
| | | County Emergency Operations Center | Existing |
| | | Gulfport-Biloxi International Airport Operations Center | Planned |
| | | Gulfport-Biloxi International Airport Security Monitoring System | Existing |
| | | MDOT District 6 Security Monitoring System | Existing |
| | | MDOT District 6 TOC | Existing |
| | | MEMA Emergency Operations Center | Existing |
| | | MHP Dispatch Centers | Existing |
| | | Mississippi Emergency Management Agency | Existing |
| | | Mississippi Office of Homeland Security | Existing |
| | | Neighboring State Emergency Management Centers | Existing |
| | | Weather Service | Existing |
| | | | |
| EM08 | Disaster Response and Recovery | Biloxi and Gulfport Multimodal Transit Centers | Planned |
| | | City of Biloxi TOC | Existing |
| | | City of Gulfport TOC | Existing |
| | | City of Pascagoula TOC | Existing |
| | | City/County 911 Dispatch Centers | Existing |
| | | Coast Transit Authority | Existing |
| | | County Emergency Operations Centers | Existing |
| | | Gulfport-Biloxi International Airport Operations Center | Planned |
| | | Local City/County TOCs | Existing |
| | | MDOT District 6 TOC | Existing |
| | | MDOT District 6 Maintenance and Construction Offices | Existing |
| | | MDOT Statewide TMC | Existing |
| | | MEMA Emergency Operations Center | Existing |
| | | MHP District 8 Offices | Existing |
| | | MHP Dispatch Centers | Existing |
| | | Mississippi Department of Environmental Quality | Existing |
| | | Mississippi Emergency Management Agency | Existing |
| | | Mississippi Office of Homeland Security | Existing |
| | | Neighboring State Emergency Management Centers | Existing |
| | | Other Transit Service Providers | Existing |
| | | | |
| EM09 | Evacuation and | Biloxi and Gulfport Multimodal Transit Centers | Planned |

| Market Package | Market Package Name | Associated Element | Status |
|---|---|---|---|
| | Reentry Management | City of Biloxi TOC | Existing |
| | | City of Gulfport TOC | Existing |
| | | City of Pascagoula TOC | Existing |
| | | City/County 911 Dispatch Centers | Existing |
| | | Coast Transit Authority | Existing |
| | | County Emergency Operations Centers | Existing |
| | | Gulfport-Biloxi International Airport Operations Center | Planned |
| | | Local City/County TOCs | Existing |
| | | MDOT District 6 TOC | Existing |
| | | MDOT District 6 Maintenance and Construction Offices | Existing |
| | | MDOT Statewide TMC | Existing |
| | | MEMA Emergency Operations Center | Existing |
| | | MHP District 8 Offices | Existing |
| | | MHP Dispatch Centers | Existing |
| | | Mississippi Emergency Management Agency | Existing |
| | | Mississippi Office of Homeland Security | Existing |
| | | Neighboring State Emergency Management Centers | Existing |
| | | Neighboring State Highway Patrol Dispatch Centers | Existing |
| | | | |
| EM10 | Disaster Traveler Information | Biloxi and Gulfport Multimodal Transit Centers | Planned |
| | | Biloxi and Gulfport Multimodal Transit Centers Kiosks | Planned |
| | | County Emergency Operations Center | Existing |
| | | Gulfport-Biloxi International Airport Information System | Existing |
| | | MDOT Statewide 511 System | Planned |
| | | MDOT MSTraffic.com | Existing |
| | | MDOT District 6 TOC | Existing |
| | | MDOT Traveler Information Repository | Planned |
| | | Media | Existing |
| | | MEMA Emergency Operations Center | Existing |
| | | Mississippi Emergency Management Agency | Existing |
| | | Mississippi Office of Homeland Security | Existing |
| | | Telecommunications Systems for Traveler Information | Planned |
| | | User Personal Computing Devices | Existing |
| | | | |
| MC01 | Maintenance and Construction Vehicle and Equipment Tracking | MDOT District 6 TOC | Existing |
| | | MDOT District 6 Maintenance and Construction Offices | Existing |
| | | MDOT District 6 Maintenance Vehicles | Existing |
| | | | |
| MC02 | Maintenance and Construction Vehicle Maintenance | City of Gulfport Public Works | Existing |
| | | MDOT District 6 Maintenance and Construction Offices | Existing |
| | | MDOT District 6 Maintenance Vehicles | Existing |
| | | | |
| MC03 | Road Weather Data Collection | MDOT District 6 Fog Detection System | Planned |
| | | MDOT District 6 Maintenance and Construction Office | Existing |
| | | MDOT District 6 Weather Sensors | Planned |
| | | MDOT District 6 TOC | Existing |
| | | Weather Service | Existing |
| | | | |
| MC04 | Weather | MDOT District 6 TOC | Existing |

| Market Package | Market Package Name | Associated Element | Status |
|---|---|---|---|
| | Information Processing and Distribution | MDOT District 6 Maintenance and Construction Office | Existing |
| | | MDOT MSTraffic.com | Existing |
| | | MDOT Traveler Information Repository | Planned |
| | | MHP Dispatch Center | Existing |
| | | Mississippi Road/Weather Conditions Website | Existing |
| | | Weather Service | Existing |
| | | | |
| MC07 | Roadway Maintenance and Construction | MDOT District 6 TOC | Existing |
| | | MDOT District 6 Maintenance and Construction Offices | Existing |
| | | Weather Service | Existing |
| | | | |
| MC08 | Work Zone Management | City of Biloxi Public Works | Existing |
| | | City of Biloxi TOC | Existing |
| | | City of Biloxi TOC Roadside Equipment | Existing |
| | | City of Gulfport Public Works | Existing |
| | | City of Gulfport Public Works Field Devices | Existing |
| | | City of Gulfport TOC | Existing |
| | | City of Gulfport TOC Roadside Equipment | Existing |
| | | City of Pascagoula Public Works | Existing |
| | | City of Pascagoula TOC | Existing |
| | | City of Pascagoula TOC Roadside Equipment | Existing |
| | | Local City/County Public Works | Planned |
| | | Local City/County TOCs | Existing |
| | | Local City/County TOCs Roadside Equipment | Existing |
| | | MDOT District 6 TOC | Existing |
| | | MDOT District 6 Highway Advisory Radio | Existing |
| | | MDOT District 6 Maintenance and Construction Field Devices | Existing |
| | | MDOT District 6 Maintenance and Construction Offices | Existing |
| | | MDOT District 6 Portable Dynamic Message Signs | Existing |
| | | MDOT District 6 Video Surveillance Equipment | Existing |
| | | Media | Existing |
| | | | |
| MC10 | Maintenance and Construction Activity Coordination | Biloxi and Gulfport Multimodal Transit Centers | Planned |
| | | City of Biloxi Public Works | Existing |
| | | City of Biloxi TOC | Existing |
| | | City of Gulfport Public Works | Existing |
| | | City of Gulfport TOC | Existing |
| | | City of Pascagoula Public Works | Existing |
| | | City of Pascagoula TOC | Existing |
| | | Coast Transit Authority | Existing |
| | | City/County 911 Dispatch Centers | Existing |
| | | Local City/County Public Works | Planned |
| | | Local City/County TOCs | Existing |
| | | Gulfport-Biloxi International Airport Operations Center | Planned |
| | | MDOT District 6 TOC | Existing |
| | | MDOT District 6 Maintenance and Construction Offices | Existing |
| | | MDOT MSTraffic.com | Existing |
| | | MDOT Traveler Information Repository | Planned |
| | | Media | Existing |
| | | MHP Dispatch Centers | Existing |
| | | Rail Companies | Existing |
| | | | |

THIS PAGE INTENTIONALLY LEFT BLANK

# 6. SUBSYSTEMS, EQUIPMENT PACKAGES AND FUNCTIONAL REQUIREMENTS

As one of the required components of an ITS architecture identified in FHWA Final Rule and FTA Policy on ITS Architecture and Standards, this section of the report summarizes the system functional requirements for the Gulf Region ITS Architecture in terms of market packages, subsystems, and equipment packages.

## 6.1 Mapping of Market Packages to Subsystems and Equipment Packages

A market package is implemented with a combination of interrelated equipment; this equipment often resides in several different subsystems within the architecture framework and may be operated by different stakeholders. For instance, the Maintenance and Construction Equipment and Vehicle Tracking market package includes equipment in the Vehicle Subsystem and a utilization and management element in the Maintenance and Construction Management Subsystem. In this example, the market package elements are owned and operated by the same traffic management stakeholder.

In other cases, the market package elements are owned and operated by different stakeholders. Many of the Advanced Traveler Information Systems (ATIS) market packages require equipment in the Information Service Provider Subsystem that is owned and operated by a public or private information provider and equipment that is acquired and operated by the consumer as part of the Vehicle Subsystem or Personal Information Access Subsystem. Since equipment in different subsystems may be purchased and operated by different end-users, these subsystem-specific components may encounter varied deployment.

To understand and analyze these potential deployment variations, the defined market packages must be reduced to their constituent elements. The portion of the market package capabilities allocated to each subsystem are segregated and defined as equipment packages to support this additional resolution. An equipment package represents a set of

equipment/capabilities likely to be purchased by an end-user as a component to an overall system. It should be noted that there are no equipment packages defined for the terminators of the National ITS Architecture, as they represent systems on the boundary of the architecture and do not have functional descriptions within the architecture.

Table 6-1 illustrates the subsystems and equipment packages that are mapped to the customized list of market packages. The table illustrates the specific market packages in the Gulf Region ITS Architecture, the subsystems that are part of the market packages, and the equipment packages that make up the market packages. As indicated in the table, the architecture provides a means to map the market package to appropriate subsystems (components) and equipment packages (technology). The equipment packages identified in Table 6-1 were used to develop the specific functional requirements of each element. The definitions of the equipment packages can be found on the National ITS Architecture website at http://itsarch.iteris.com/itsarch/.

**Table 6-1. Market Packages, Subsystems and Equipment Packages**

| Market Package | Market Package Name | Subsystem | Equipment Package |
|---|---|---|---|
| AD1 | ITS Data Mart | Archived Data Management | Traffic and Roadside Data Archival |
| | | | ITS Data Repository |
| | | | Government Reporting System Support |
| | | | Online Analysis and Mining |
| | | Commercial Vehicle Administration | CV Data Collection |
| | | Emergency Management | Emergency Data Collection |
| | | Maintenance and Construction Management | MCM Data Collection |
| | | Roadway Subsystem | Roadway Data Collection |
| | | Traffic Management | Traffic Data Collection |
| | | Transit Subsystem | Transit Data Collection |
| AD2 | ITS Data Warehouse | Archived Data Management | ITS Data Repository |
| | | | Traffic and Roadside Data Archival |
| | | | Government Reporting System Support |
| | | | On-line Analysis and Mining |
| | | Commercial Vehicle Administration | CV Data Collection |
| | | Emergency Management | Emergency Data Collection |
| | | Maintenance and Construction Management | MCM Data Collection |
| | | Roadway Subsystem | Roadway Data Collection |
| | | Traffic Subsystem | Traffic Data Collection |
| | | Transit Subsystem | Transit Data Collection |
| APTS1 | Transit Vehicle Tracking | Transit Management | Transit Center Vehicle Tracking |
| | | Transit Vehicle Subsystem | On-board Transit Trip Monitoring |
| | | Vehicle Subsystem | Vehicle Location Determination |
| APTS2 | Transit Fixed-Route Operations | Transit Management | Transit Center Fixed-Route Operations |
| | | | Transit Vehicle Operator Scheduling |
| | | Transit Vehicle Subsystem | On-board Fixed Route Schedule Management |
| APTS3 | Demand Response Transit Operations | Transit Management | Transit Center Paratransit Operations |
| | | | Transit Vehicle Operator Scheduling |
| | | Transit Vehicle Subsystem | On-board Paratransit Operations |
| APTS4 | Transit Passenger and Fare Management | Transit Management | Transit Center Fare and Load Management |
| | | Transit Vehicle Subsystem | On-board Transit Fare and Load Management |

| Market Package | Market Package Name | Subsystem | Equipment Package |
|---|---|---|---|
| | | Remote Traveler Support | Remote Transit Fare Management |
| APTS5 | Transit Security | Transit Management | Transit Center Security |
| | | Transit Vehicle Subsystem | On-board Transit Security |
| | | Emergency Management | Center Secure Area Surveillance |
| | | | Emergency Response Management |
| | | Remote Traveler Support | Traveler Secure Area Surveillance |
| | | Security Monitoring | Field Secure Area Surveillance |
| APTS6 | Transit Maintenance | Transit Management | Transit Garage Maintenance |
| | | Transit Vehicle Subsystem | On-board Maintenance |
| ATPS7 | Multi-modal Coordination | Transit Management | Transit Center Multi-Modal Coordination |
| | | Transit Vehicle Subsystem | On-board Transit Signal Priority |
| | | Traffic Management | TMC Multimodal Coordination |
| | | | TMC Signal Control |
| | | Roadway Subsystem | Roadway Signal Priority |
| APTS8 | Transit Traveler Information | Transit Management | Transit Center Information Services |
| | | Personal Information Access | Personal Interactive Information Reception |
| | | Remote Traveler Support | Remote Transit Information Services |
| | | Information Service Provider | Infrastructure Provided Trip Planning |
| | | | ISP Traveler Data Collection |
| ATIS1 | Broadcast Traveler Information | Information Service Provider | Basic Information Broadcast |
| | | | ISP Traveler Data Collection |
| | | Personal Information Access | Personal Basic Information Reception |
| | | Remote Traveler Support | Remote Basic Information Reception |
| ATIS2 | Interactive Traveler Information | Information Service Provider | Traveler Telephone Information |
| | | | ISP Traveler Data Collection |
| | | Personal Information Access | Personal Interactive Information Reception |
| | | Remote Traveler Support | Personal Interactive Information Reception |
| ATMS01 | Network Surveillance | Traffic Management | Collect Traffic Surveillance |
| | | | Traffic Maintenance |
| | | Roadway Subsystem | Roadway Basic Surveillance |
| | | | Roadway Equipment Coordination |
| ATMS03 | Surface Street Control | Traffic Management | Collect Traffic Surveillance |
| | | | TMC Signal Control |
| | | | Traffic Maintenance |
| | | Roadway Subsystem | Roadway Signal Controls |
| | | | Roadway Basic Surveillance |
| | | | Roadway Equipment Coordination |
| ATMS06 | Traffic Information Dissemination | Traffic Management | TMC Traffic Information Dissemination |
| | | Roadway Subsystem | Roadway Traffic Information Dissemination |

| Market Package | Market Package Name | Subsystem | Equipment Package |
|---|---|---|---|
| | | | Roadway Equipment Coordination |
| ATMS07 | Regional Traffic Control | Traffic Management | TMC Regional Traffic Control |
| | | | TMC Signal Control |
| ATMS08 | Traffic Incident Management System | Traffic Management | TMC Incident Detection |
| | | | TMC Incident Dispatch Coordination/Communication |
| | | Roadway Subsystem | Roadway Incident Detection |
| | | | Roadway Equipment Coordination |
| | | Emergency Management | Emergency Response Management |
| | | | Incident Command |
| | | Maintenance and Construction Management | MCM Incident Management |
| | | Emergency Vehicle Subsystem | On-board EV Incident Management Communication |
| ATMS09 | Traffic Forecast and Demand Management | Traffic Management | TMC Traffic Network Performance Evaluation |
| | | Transit Management | Transit Center Multimodal Coordination |
| ATMS13 | Standard Railroad Grade Crossing | Traffic Management | HRI Traffic Management |
| | | Roadway Subsystem | Standard Rail Crossing |
| ATMS14 | Advanced Railroad Grade Crossing | Traffic Management | HRI Traffic Management |
| | | Roadway | Advanced Rail Crossing |
| ATMS15 | Railroad Operations Coordination | Traffic Management | Rail Operations Coordination |
| ATMS16 | Parking Facility Management | Parking Management | Parking Management |
| | | | Parking Electronic Payment |
| ATMS18 | Reversible Lane Management | Traffic Management | TMC Reversible Lane Management |
| | | Roadway | Roadway Reversible Lanes |
| | | | Roadway Equipment Coordination |
| ATMS19 | Speed Monitoring | Maintenance and Construction Management | MCM Speed Monitoring |
| | | Roadway | Roadway Speed Monitoring |
| | | | Roadway Equipment Coordination |
| ATMS20 | Drawbridge Management | Traffic Management | TMC Multimodal Crossing Management |
| | | Roadway | Multimodal Crossing Control |
| ATMS21 | Roadway Closure Management | Emergency Management | Emergency Response Management |
| | | Traffic Management | TMC Traffic Information Dissemination |
| | | | Collect Traffic Surveillance |
| | | | Barrier System Management |
| | | Roadway | Roadway Traffic Information Dissemination |
| | | | Roadway Basic Surveillance |
| | | | Roadway Work Zone Traffic Control |

| Market Package | Market Package Name | Subsystem | Equipment Package |
|---|---|---|---|
| | | | Roadway Equipment Coordination |
| | | | Field Barrier System Control |
| | | Maintenance and Construction Management | MCM Work Zone Management |
| CVO03 | Electronic Clearance | Commercial Vehicle Administration | CV Information Exchange |
| | | | CV Safety Administration |
| | | Commercial Vehicle Check | Citation and Accident Electronic Recording |
| | | | Roadside Electronic Screening |
| | | Commercial Vehicle | On-board CV Electronic Data |
| CVO04 | CV Administrative Processes | Commercial Vehicle Administration | Credentials and Taxes Administration |
| | | | CV Information Exchange |
| | | Fleet and Freight Management | Fleet Administration |
| | | | Fleet Credentials and Taxes Management and Reporting |
| CVO06 | Weigh-In-Motion | Commercial Vehicle Check | Roadside WIM |
| | | Commercial Vehicle Subsystem | On-board CV Electronic Data |
| CVO07 | Roadside CVO Safety | Commercial Vehicle Administration | CV Information Exchange |
| | | | CV Safety Administration |
| | | Commercial Vehicle Check | Roadside Electronic Screening |
| | | | Roadside Safety and Security Inspection |
| | | | Citation and Accident Electronic Recording |
| | | Commercial Vehicle | On-board CV Electronic Data |
| | | Fleet and Freight Management | Fleet Administration |
| CVO10 | HAZMAT Management | Emergency Management | Emergency Commercial Vehicle Response |
| | | Fleet and Freight Management | Fleet HAZMAT Management |
| | | Vehicle | Vehicle Location Determination |
| EM01 | Emergency Call-Taking and Dispatch | Emergency Management | Emergency Call-Taking |
| | | | Emergency Dispatch |
| | | Emergency Vehicle Subsystem | On-board EV En Route Support |
| EM02 | Emergency Routing | Emergency Management | Emergency Routing |
| | | Emergency Vehicle Subsystem | On-board EV En Route Support |
| | | Traffic Management | TMC Incident Dispatch Coordination/Communication |
| | | | TMC Signal Control |
| | | Roadway Subsystem | Roadway Signal Priority |

| Market Package | Market Package Name | Subsystem | Equipment Package |
|---|---|---|---|
| | | Vehicle Subsystem | Vehicle Location Determination |
| EM04 | Roadway Service Patrols | Emergency Management | Service Patrol Management |
| | | Emergency Vehicle Subsystem | On-board EV En-route Support |
| | | | On-board EV Incident Management Communication |
| EM05 | Transportation Infrastructure Protection | Traffic Management | TMC Incident Dispatch Coordination/Communication |
| | | | Barrier System Management |
| | | Emergency Management | Center Secure Area Surveillance |
| | | Security Monitoring | Field Secure Area Surveillance |
| | | Remote Traveler Support | Traveler Secure Area Surveillance |
| | | Roadway | Field Barrier System Control |
| EM06 | Wide-Area Alert | Emergency Management | Emergency Early Warning System |
| | | Information Service Provider | ISP Emergency Traveler Information |
| | | | ISP Traveler Data Collection |
| | | | Traveler Telephone Information |
| | | Maintenance and Construction Management | MCM Incident Management |
| | | Personal Information Access | Personal Basic Information Reception |
| | | Traffic Management | TMC Traffic Information Dissemination |
| | | | TMC Incident Dispatch Coordination/Communication |
| | | Transit Management | Transit Center Information Services |
| | | | Transit Center Security |
| | | Remote Traveler Support | Remote Basic Information Reception |
| | | | Remote Transit Information Services |
| | | Roadway Subsystem | Roadway Traffic Information Dissemination |
| EM07 | Early Warning System | Emergency Management | Emergency Early Warning System |
| | | | Center Secure Area Surveillance |
| | | | Emergency Environmental Monitoring |
| | | Security Monitoring | Field Secure Area Surveillance |
| | | Traffic Management | TMC Incident Detection |
| | | Transit Management | Transit Center Security |
| | | Maintenance and Construction Management | MCM Incident Management |
| EM08 | Disaster Response and Recovery | Emergency Management | Emergency Response Management |
| | | | Incident Command |
| | | Maintenance and Construction Management | MCM Incident Management |
| | | | MCM Roadway Maintenance and Construction |
| | | Transit Management | Transit Center Security |
| | | Traffic Management | TMC Incident Dispatch Coordination/Communication |

| Market Package | Market Package Name | Subsystem | Equipment Package |
|---|---|---|---|
| EM09 | Evacuation and Reentry Management | Emergency Management | Emergency Evacuation Support |
| | | Traffic Management | TMC Evacuation Support |
| | | Transit Management | Transit Evacuation Support |
| | | Maintenance and Construction Management | MCM Incident Management |
| EM10 | Disaster Traveler Information | Information Service Provide | ISP Emergency Traveler Information |
| | | | ISP Traveler Data Collection |
| | | | Traveler Telephone Information |
| | | Emergency Management | Emergency Evacuation Support |
| | | | Emergency Response Management |
| | | Personal Information Access | Personal Basic Information Reception |
| | | | Personal Interactive Information Reception |
| | | Remote Traveler Support | Remote Basic Information Reception |
| | | | Remote Interactive Information Reception |
| MC01 | Maintenance and Construction Vehicle and Equipment Tracking | Maintenance and Construction Management | MCM Vehicle Tracking |
| | | Maintenance and Construction Vehicle | MCV Vehicle Location Tracking |
| | | Vehicle | Vehicle Location Determination |
| MC02 | Maintenance and Construction Vehicle Maintenance | Maintenance and Construction Management | MCM Vehicle and Equipment Maintenance Management |
| | | Maintenance and Construction Vehicle | MCV Vehicle System Monitoring and Diagnostics |
| MC03 | Road Weather Data Collection | Maintenance and Construction Management | MCM Environmental Information Collection |
| | | Emergency Management | Emergency Environmental Monitoring |
| | | Roadway Subsystem | Roadway Environmental Monitoring |
| | | Traffic Management | TMC Environmental Monitoring |
| MC04 | Weather Information Processing and Distribution | Maintenance and Construction Management | MCM Environmental Information Processing |
| | | Emergency Management | Emergency Environmental Monitoring |
| | | Information Service Provider | ISP Traveler Data Collection |
| | | Traffic Management | TMC Environmental Monitoring |
| MC07 | Roadway Maintenance and Construction | Maintenance and Construction Management | MCM Roadway Maintenance and Construction |
| | | | MCM Maintenance Decision Support |
| | | Traffic Management | Traffic Maintenance |
| MC08 | Work Zone Management | Maintenance and Construction Management | MCM Work Zone Management |
| | | Traffic Management | TMC Work Zone Traffic Management |

| Market Package | Market Package Name | Subsystem | Equipment Package |
|---|---|---|---|
| | | Roadway Subsystem | Roadway Work Zone Traffic Control |
| MC10 | Maintenance and Construction Activity Coordination | Maintenance and Construction Management | MCM Work Activity Coordination |
| | | Emergency Management | Emergency Response Management |
| | | Traffic Management | TMC Work Zone Traffic Management |

## 6.2 Functional Requirements

A functional requirement is a task or activity currently performed or planned to be performed by each system in the region to provide the required regional ITS services. In the National ITS Architecture, each functional area (i.e. equipment package) has several specific functional requirements that are necessary for performing the equipment package capabilities. These functional requirements of the National ITS Architecture are commonly used as a baseline to develop the functional requirements of a regional ITS architecture.

The process to develop the functional requirements of the Gulf Region ITS Architecture begins with the mapping of functional areas to market packages and associated elements as an initial definition of the functions being performed by each element. The functional requirements of each equipment package were then tailored to provide a more accurate picture of the functions performed. Using Turbo Architecture, functional requirements that support the ITS projects for the region were identified. These functional requirements are listed in Appendix B. The appendix includes the following information for each ITS element:

- **Element.** Name of the system that will be performing the function
- **Entity.** Describes the National ITS Architecture subsystem to which the element is mapped
- **Functional Area.** Description of the function performed by the element
- **Requirement.** High-level functional requirement to be performed by the element supporting the functional area

To illustrate functions and functional requirements, the traffic signal control and management function of MDOT District 6 Traffic Signal Systems is used as an example. In the Gulf Region ITS Architecture, MDOT District 6 Traffic Signal Systems was mapped to the Roadway

Subsystem as it provides signal control and management functions. The market package associated with these functions is ATMS03 Surface Street Control. Four functional areas (equipment packages) are required for the MDOT District 6 Traffic Signal Systems to perform the signal control and management capability. They are:

- **Roadway Signal Control:** This equipment package includes field elements such as traffic signal controllers for use at signalized intersections; also supports pedestrian crossings.
- **Roadway Signal Priority:** This equipment package includes field elements that provide the capability to receive vehicle signal priority requests and control traffic signals accordingly.
- **Standard Rail Crossing:** This equipment package includes field elements at highway-rail intersections (HRIs) where operational requirements do not dictate advanced features (e.g., where rail operational speeds are less than 80 miles per hour). Includes traditional HRI warning systems augmented with other standard traffic management devices.
- **Roadway Equipment Coordination:** This equipment package includes field elements that control and send data to other field elements (such as environmental sensors that send data to a DMS or coordination between traffic controllers on adjacent intersections), without center control.

In the National ITS Architecture, the Roadway Signal Control equipment package contains seven specific functional requirements, the Roadway Signal Priority equipment package contains three specific functional requirements, the Standard Rail Crossing equipment package contains nine specific functional requirements and the Roadway Equipment Coordination equipment package contains four specific functional requirements. However, not all of the functional requirements are applicable to the Gulf Region ITS Architecture. The appropriate functional requirements for each equipment package were tailored and identified in Table 6-2.

**Table 6-2. Functional Requirements Example MDOT District 6 Traffic Signal Systems**

| Functional Area (Equipment Package) | Functional Requirements | Status |
|---|---|---|
| Roadway Signal | The field element shall control traffic signals at intersections and | Existing |

| Functional Area (Equipment Package) | Functional Requirements | Status |
|---|---|---|
| Control | on main highways for urban and rural areas, under center control. | |
| | The field element shall collect pedestrian images and pedestrian sensor data, and respond to pedestrian crossing requests via display, audio signal, or other manner. | Existing |
| | The field element shall provide the capability to notify the traffic management center that a pedestrian has requested right-of-way and when the request was or will be granted (request for right-of-way). | Existing |
| | The field element shall monitor operation of traffic signal controllers and report to the center any instances in which the indicator response does not match that expected from the indicator control information. | Existing |
| | The field element shall monitor operation of traffic signal controllers and report to the center any instances in which the indicator response does not match that expected from known indicator preemptions. | Existing |
| | The field element shall return traffic signal controller operational status to the controlling center. | Existing |
| | The field element shall return traffic signal controller fault data to the maintenance center for repair. | Existing |
| Roadway Signal Priority | The field element shall respond to requests for indicator (e.g., signal) preemption requests from emergency vehicles at intersections, pedestrian crossings, and multimodal crossings. | Planned |
| | The field element shall respond to requests for indicator (e.g., signal) priority requests from transit vehicles at intersections, pedestrian crossings, and multimodal crossings. | Planned |
| | The field element shall notify controlling traffic management center and maintenance center that the signal timing has changed based on a signal preemption/priority request to help those centers determine whether a fault detected at the signal is a true malfunction or due to a signal override. | Planned |
| Standard Rail Crossing | The field element shall collect and process, traffic sensor data in the vicinity of a highway-rail intersection (HRI). | Existing |
| | The field element shall monitor the status of the highway-rail intersection (HRI) equipment, including both the current state and mode of operation and the current equipment condition, to be forwarded on to the traffic management center. | Existing |
| | The field element shall monitor the status of the highway-rail intersection (HRI) equipment, including both the current state and mode of operation and the current equipment condition, to be forwarded on to the rail wayside equipment. | Existing |
| | The field element shall receive track status from the rail wayside equipment that can be passed on to the traffic management center. This may include the current status of | Existing |

| Functional Area (Equipment Package) | Functional Requirements | Status |
|---|---|---|
| | the tracks and whether a train is approaching. | |
| | The field element shall support the integrated control of adjacent traffic signals to clear an area in advance of an approaching train and to manage traffic around the intersection. | Existing |
| Roadway Equipment Coordination | The field element shall include sensors (such as traffic, environmental, and work zone intrusion detection sensors) that provide data and status information to other field element devices (such as dynamic message signs, ramp meters, traffic signals, work zone intrusion alert systems), without center control. | Existing |
| | The field element shall include sensors (such as traffic, environmental and work zone intrusion detection sensors) that receive control information from other field element devices, without center control. | Existing |
| | The field element shall include devices (such as arterial or freeway controllers, roadway automated treatment systems, barrier and safeguard systems, emissions or pollution systems, and work zone intrusion alert systems) that provide data and status information to other field element devices (such as dynamic message signs, traffic controllers on adjacent intersections), without center control. | Existing |
| | The field element shall include devices (such as arterial or freeway controllers, roadway automated treatment systems, barrier and safeguard systems, emissions or pollution systems, and work zone intrusion alert systems) that receive control information from other field element devices, without center control. | Existing |

THIS PAGE INTENTIONALLY LEFT BLANK

# 7. INTERCONNECTS AND ARCHITECTURE FLOWS

While it is important to identify the various ITS systems and associated stakeholders, a primary purpose of the Gulf Region ITS Architecture is to identify the *connectivity* between systems.

- **Interconnects** define an ITS architecture from a physical perspective, which shows the connections that can be established between equipment and systems which may be deployed by different organizational or operating agencies throughout the region.
- **Architecture Flows** define an ITS architecture from a logical perspective, which identify high-level information exchange associated with each interconnect between equipment and systems.

## 7.1 System Interconnects

Based on subsystems and market packages selected for each ITS inventory element, a set of interconnects between the elements has been identified. As shown in Figure 7-1, a high-level interconnect diagram for the Gulf Region ITS Architecture, often referred to as a "sausage diagram," illustrates the subsystems and primary types of interconnects (or communications) between these subsystems. The sausage diagram was customized to reflect the ITS systems in the region. The shaded areas in Figure 7-1 indicate the functions and services not currently existing or planned in the region. The sausage diagram identifies four basic types of communications used to interconnect the elements. The definitions of the four types of communications are:

- **Fixed-Point to Fixed-Point Communications:** a communication link serving stationary entities. It may be implemented using a variety of public or private communication networks and technologies. It can include, but is not limited to, twisted pair, coaxial cable, fiber optic, microwave relay networks, spread spectrum, etc. In Fixed-Point to Fixed-Point communication the important issue is that it serves stationary entities. Both dedicated and shared communication resources may be used.
- **Wide Area Wireless Communications:** a communications link that provides communications via a wireless device between a user and an infrastructure-based system. Both broadcast (one-way) and interactive (two-way) communications services are

grouped into wide-area wireless communications in the National ITS Architecture. These links support a range of services in the National ITS Architecture including real-time traveler information and various forms of fleet communications.

- **Dedicated Short Range Communications:** a wireless communications channel used for close-proximity communications between vehicles and the immediate infrastructure. It supports location-specific communications for ITS capabilities such as toll collection, transit vehicle management, driver information, and automated commercial vehicle operations.
- **Vehicle to Vehicle Communications:** dedicated wireless system handling high data rate, low probability of error, and line of sight communications between vehicles. Advanced vehicle services may use this link in the future to support advanced collision avoidance implementations, road condition information sharing, and active coordination to advanced control systems.

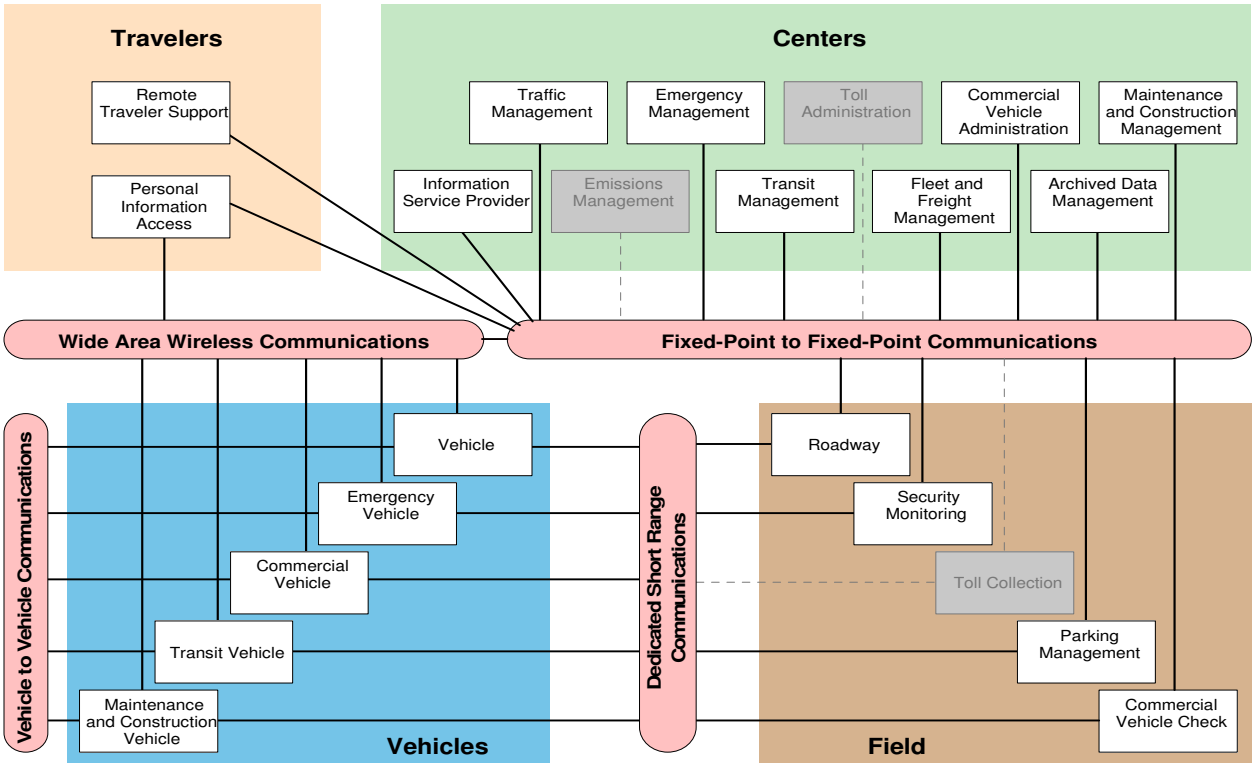


**Figure 7-1. High Level Interconnect Diagram**

On a more specific level, interconnect diagrams can depict the interactions between a specific element and other associated agencies and their systems within the architecture. Figures 7-2 to 7-4 illustrate interconnects focused on the following key regional ITS elements:

- MDOT District 6;
- Gulf Region TOCs; and
- Gulf Region Transit.

A complete set of the interconnect diagrams for the Gulf Region ITS Architecture is included in Appendix C and can also be found in the Turbo Architecture database.

## 7.2 Architecture Flows

Architecture flows provide a high level description of information exchange associated with each interconnect between equipment and systems. The architecture flows identified in the Gulf Region ITS Architecture were derived from the architecture flow diagrams within the National ITS Architecture, and therefore, they are consistent with the National ITS Architecture. Through the architecture flows, stakeholders can easily identify the existing or future information exchange between agencies and systems. This provides a framework for analyzing how elements are related and thereby identify the areas for potential coordination and cooperation among agencies. Detailed definitions of architecture flows can be found on the National ITS Architecture website at http://www.iteris.com/itsarch/. A sample architecture flow diagram for a portion of MDOT District 6 interconnected elements is presented in Figures 7-5. A complete list of architecture flows for the GRPC ITS Architecture is provided in Appendix D and can be found in the Turbo Architecture database.

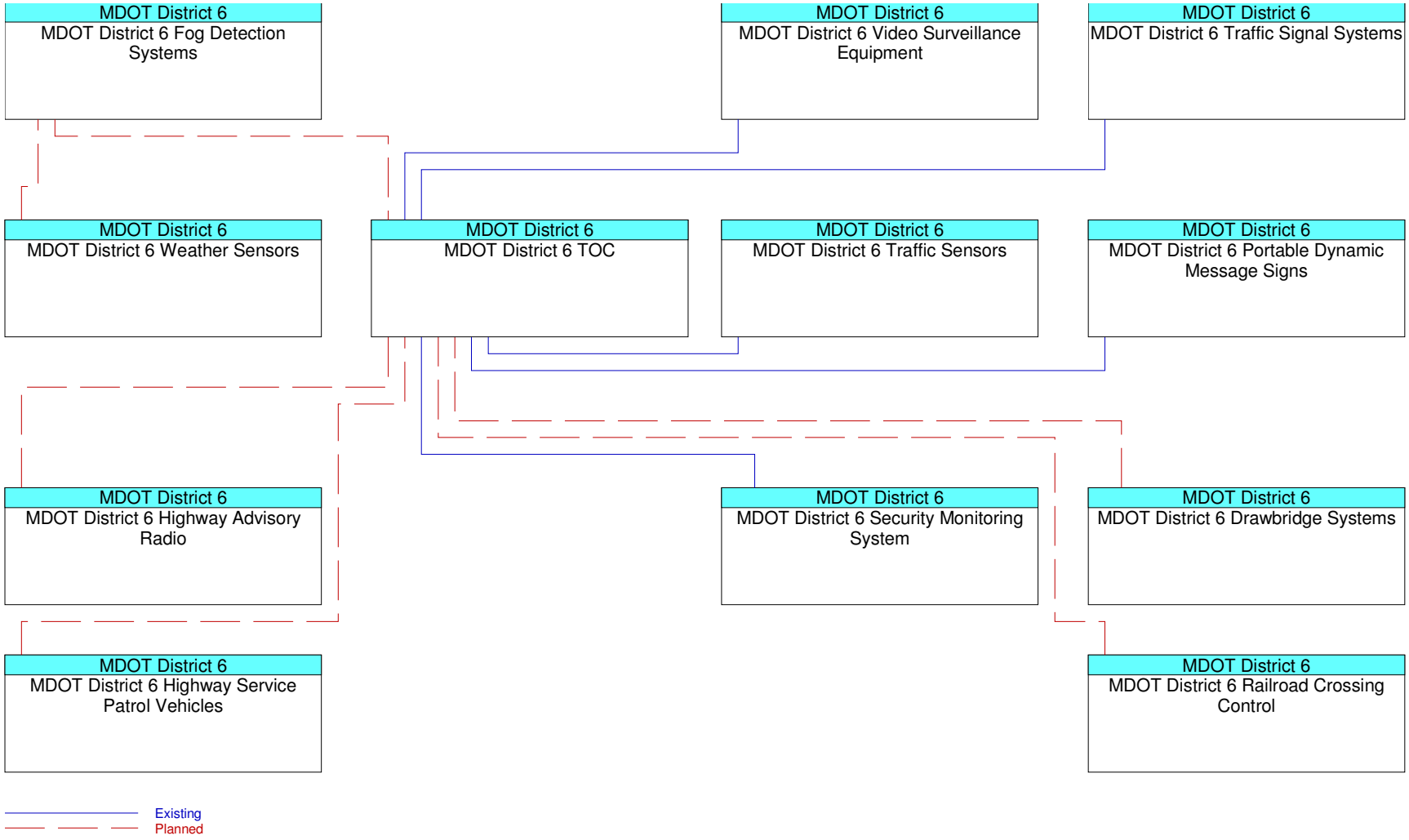


**Figure 7-2. MDOT District 6 Interconnect Diagram**

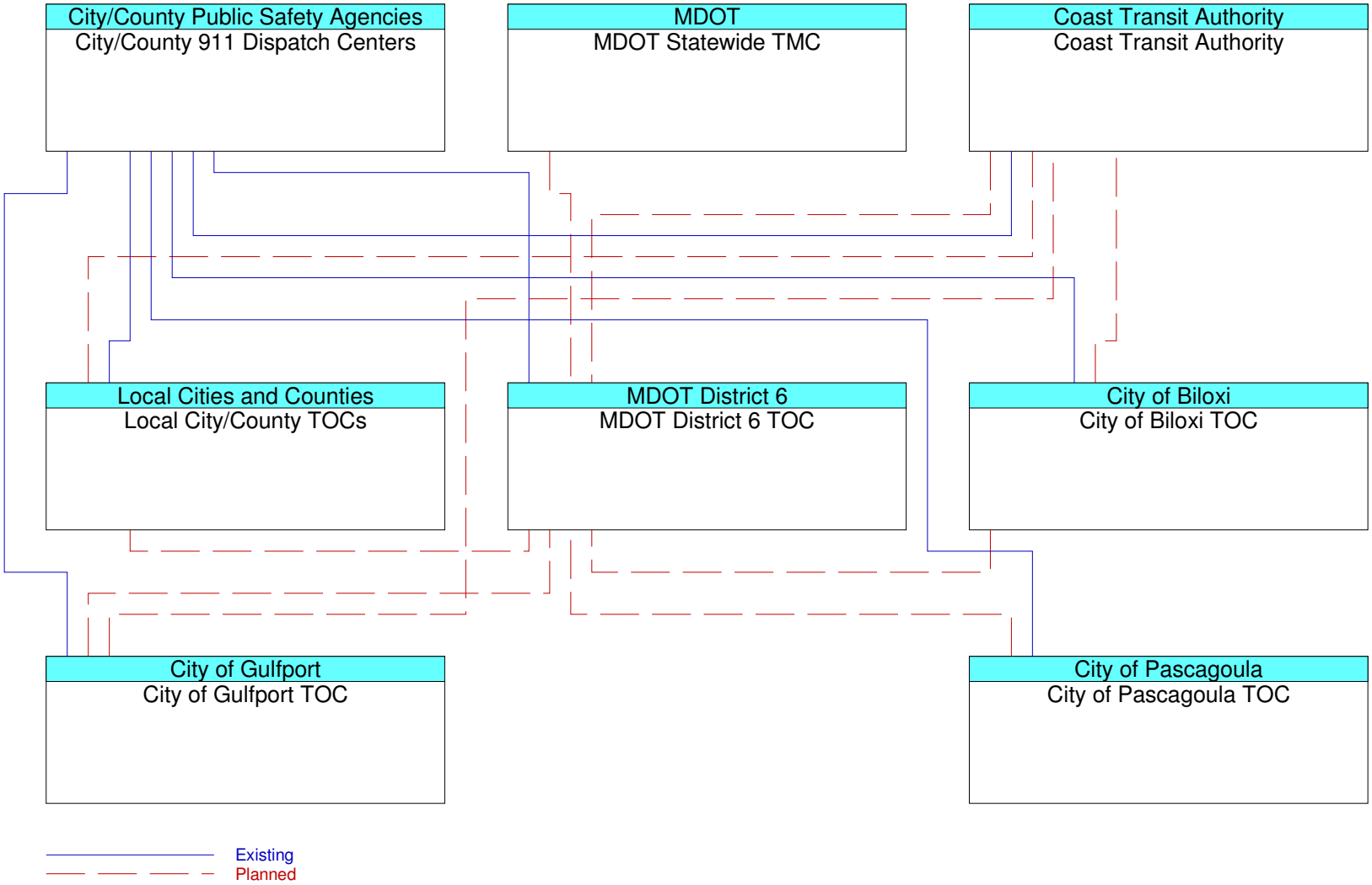


**Figure 7-3. Gulf Region TOC Interconnect Diagram**

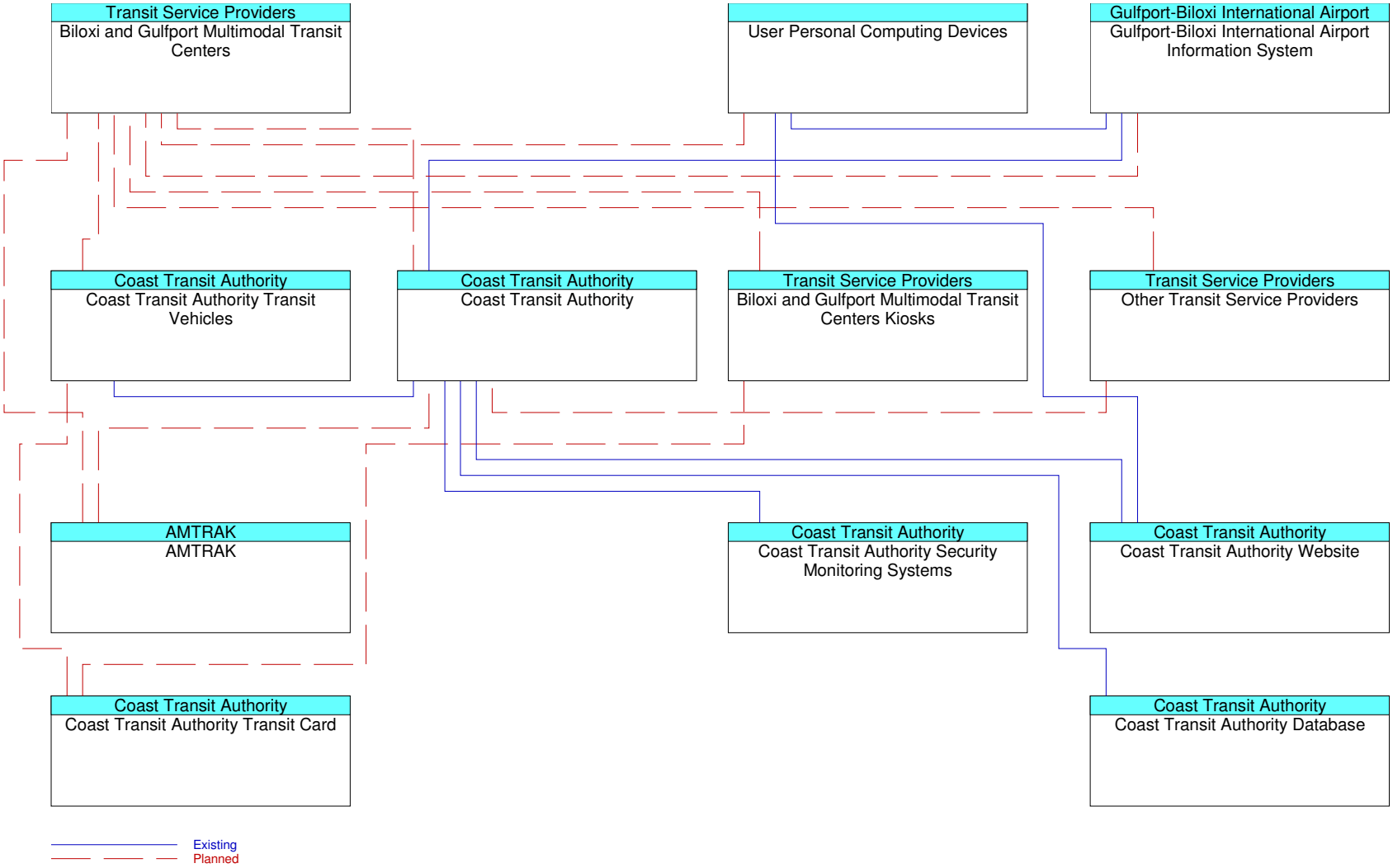


**Figure 7-4. Gulf Region Transit Interconnect Diagram**

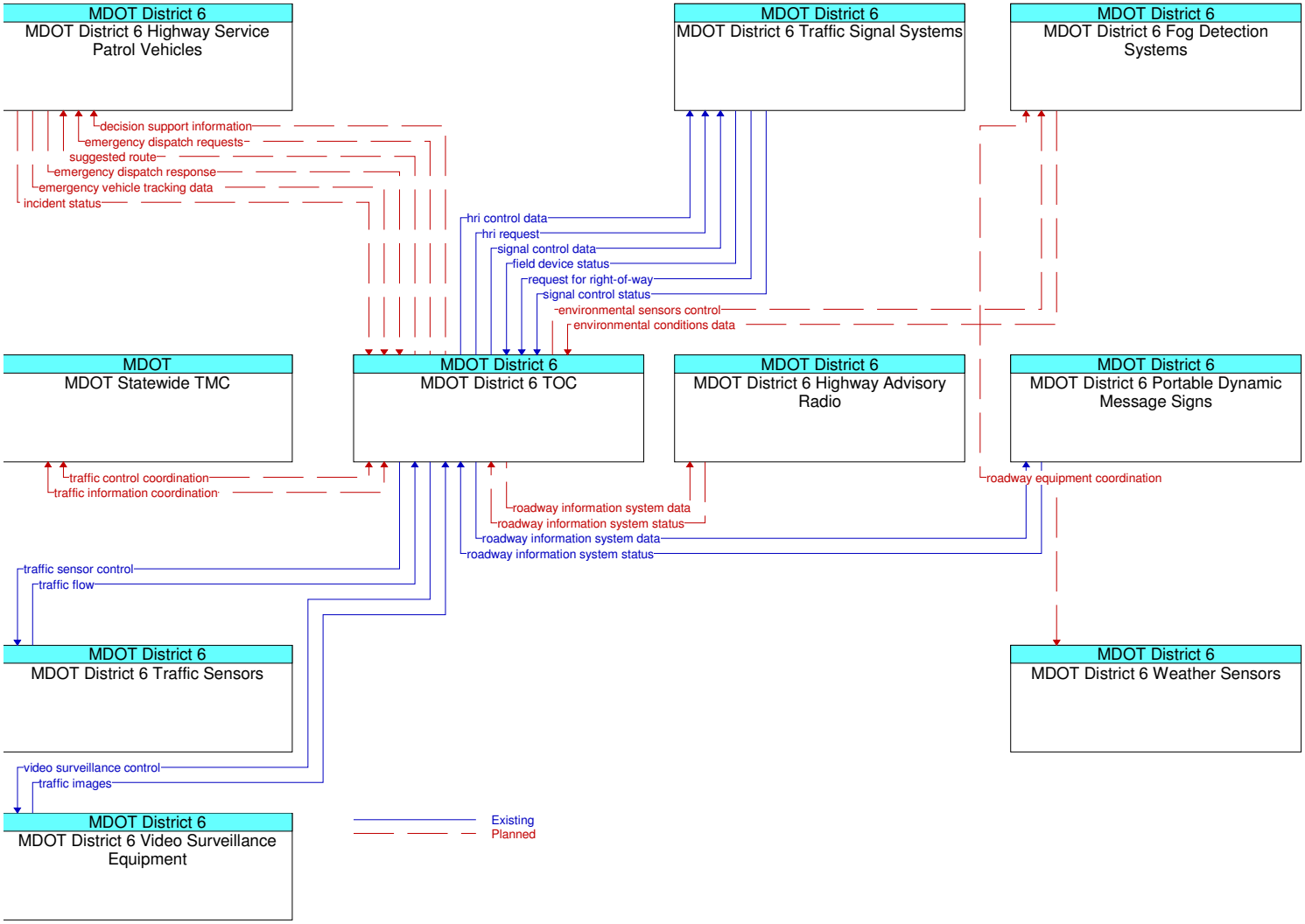


**Figure 7-5. Sample: MDOT District 6 Architecture Flow Diagram**

THIS PAGE INTENTIONALLY LEFT BLANK

# 8. ITS STANDARDS

ITS Standards are fundamental to the establishment of an open ITS environment that achieves the goals originally envisioned by the USDOT. Standards facilitate deployment of interoperable systems at local, regional, and national levels without impeding innovation as technology advances and new approaches evolve.

Standards can be thought of as the glue that holds the various components of architecture together. The logical architecture presents a functional view of the ITS user services. It defines the functions or processes that are required to perform the selected ITS user services, and the information or data flows that need to be exchanged between these functions. The physical architecture partitions the functions defined by the logical architecture into systems and subsystems. To accomplish the functions outlined in the logical architecture, communication must take place between the elements of the physical architecture. Standards define how these communications take place.

## 8.1 Standards Benefits

Many of the benefits the public receives from the National ITS Architecture are a direct result of the development and implementation of standards. Primarily, standards provide benefits in the following areas:

- **National Compatibility** – National compatibility is represented by the ability to use the same equipment and services, regardless of the geographical location. The architecture identifies specific interfaces requiring nationwide compatibility. Examples include the delivery of real-time traveler information to in-vehicle devices and the dedicated short-range communication interface between the vehicle and the roadside. Nationwide standards for these types of interfaces will allow travelers and commercial vehicles to use their compliant equipment anywhere within the United States.
- **Multiple Suppliers** – The architecture can encourage competition in the delivery of ITS services through the implementation of standards in areas where a standard is not necessarily required to provide a traveler with seamless operation of his ITS service.

These interfaces will benefit from standards in allowing multiple suppliers of equipment and software that will directly connect to other ITS systems.

- **Ranges of Functionality** – The standard packages contain data flows that support several levels of service. For example, the *trip plan* data flow contains a large number of optional data fields. The standards developer is encouraged to maintain the flexibility in the data flow specifications to allow for multiple implementations.
- **Synergy** – As discussed above, the architecture began with a logical architecture that satisfied the identified user services. As a result, there are functions and data flows common to several of the services. These "processes" appear in several higher-level data flows, and because they come from a single source they support synergy and consistency.
- **Risk Reduction** – The architecture reduces risk to public providers, private providers and consumers. For public providers, the existence of standards means that equipment purchased in one year will be likely to operate with new equipment purchased several years from now. This also means that agencies will not be locked into specific vendors since all vendors will be able to build to the same standard. For private providers, the existence of standards means that they can gather information from multiple sources using well-defined message sets and thereby increase the level of service to their customers. For consumers, products built to a particular standard will allow a user to select their service provider from a number of companies, not just the company with which their equipment happens to be compatible.

Defined standards are fundamental to the establishment of nationally compatible and interoperable ITS deployments. Standards will enable deployment of consistent, non-interfering, reliable systems on local, regional and national levels. Open standards will further benefit the consumer by enhancing competition for the range of products necessary to implement the ITS user services. Larger markets for specific products will reduce production costs through economy of scale. Producers benefit from standards because they assure a wide market over which the product can be sold. As deployment occurs, diverse systems will be developed to address the special needs of urban, suburban and rural environments. Standards must ensure interoperability across these implementations without impeding innovation as technology advances and new approaches evolve.

Well-chosen, well-timed, and broadly accepted standards can provide the following frequently referenced benefits:

- **Interoperability between diverse systems** – This benefit facilitates cost-effective area-wide implementations that ultimately provide enhanced service to the consumer.
- **Preservation of investment** – Timely standards can reduce investments in multiple incompatible approaches, some of which will become casualties of natural selection in the market place.
- **Technology insertion** – Systems can be incrementally improved to take advantage of new technologies.
- **Creation of broader markets** – Interoperability standards set the stage for national and/or international markets. The lack of a standard may ultimately limit the size of the market.
- **Interchangeability** – Interchangeable equipment reduces capital costs through increased competition and reduces maintenance costs through smaller spares inventories of less expensive replacement parts.

Note that the adopted standards must be comprehensive to support interoperability. There are several examples in which hastily developed and adopted standards have not included sufficient specification to guarantee interoperability between standard-compliant systems.

## 8.2 Using Standards

More than 110 standards have been identified as part of the National ITS Architecture standard development activities. The task of working with the public and private sector ITS community to develop these standards has been assigned to seven different Standards Development Organizations (SDOs). These SDOs include:

- American Association of State Highway and Transportation Officials (AASHTO)
- American National Standards Institute (ANSI)
- American Society for Testing and Materials (ASTM)
- Institute of Electrical and Electronics Engineers (IEEE)

- International Organization for Standardization (ISO)
- Institute of Transportation Engineers (ITE)
- National Electrical Manufactures Association (NEMA)
- Society of Automotive Engineers (SAE)

Information on the complete list of ITS Standards can be found on the ITS Standards webpage at http://www.standards.its.dot.gov/.

While the Gulf Region ITS Architecture is a comprehensive plan which includes various ITS applications, it does not cover every conceivable ITS technology. As such, not all ITS standards will be applicable to the existing and proposed projects. Table 8-1 summarizes the appropriate ITS standards for all existing and proposed projects in the Gulf Coast region.

## 8.3 Mapping of Standards to Application Areas

Table 8-2 provides a guide to ITS standards that could be considered for use in different types of ITS projects in the Gulf Coast region. Each row in the table represents an ITS standard and each column represents one of nineteen application areas. The standards included in the table are those that relate to the subsystems and information flows between them that are likely to be included in the ITS projects in the region. The application areas are deployment-oriented categories that focus on specific ITS services or systems. Each application area consists of one or more interfaces in the National ITS Architecture. They were chosen so that agencies and service providers can easily find the application area within which a particular ITS project fits. Most ITS projects will relate to only one application area, although larger projects may relate to more than one application area.

Note that not all interfaces in the Gulf Region ITS Architecture are represented by an application area. This is because not all interfaces are currently represented by approved or published ITS standards. Additional application areas may be added in the future as additional ITS standards become available. The inclusion of a standard in an application area indicates that standard may apply — not that it must apply. Conversely, the exclusion of a standard from an application area does not mean that the standard may not be used in a project for that application area. For

example, traffic management standards do not include traveler information standards; however, traffic management centers may benefit from knowing what traveler information systems do with the information.

**Table 8-1. Key Standards Supporting the Gulf Region ITS Projects**

| Standard Name | SDO | Document ID | Status* |
|---|---|---|---|
| Simple Transportation Management Framework (STMF) | AASHTO/ITE/NEMA | NTCIP 1101 | P |
| Octet Encoding Rules (OER) Base Protocol | AASHTO/ITE/NEMA | NTCIP 1102 | P |
| Transportation Management Protocols (TMP) | AASHTO/ITE/NEMA | NTCIP 1103 | A |
| Center-to-Center Naming Convention Specification | AASHTO/ITE/NEMA | NTCIP 1104 | A |
| CORBA Security Service Specification | AASHTO/ITE/NEMA | NTCIP 1105 | S |
| CORBA Near-Real Time Data Service Specification | AASHTO/ITE/NEMA | NTCIP 1106 | S |
| Global Object Definitions | AASHTO/ITE/NEMA | NTCIP 1201 | P |
| Object Definitions for Actuated Traffic Signal Controller Units | AASHTO/ITE/NEMA | NTCIP 1202 | P |
| Object Definitions for Dynamic Message Signs (DMS) | AASHTO/ITE/NEMA | NTCIP 1203 | P |
| Environmental Sensor Station (ESS) Interface Standard | AASHTO/ITE/NEMA | NTCIP 1204 | P |
| Object Definitions for Closed Circuit Television (CCTV) Camera Control | AASHTO/ITE/NEMA | NTCIP 1205 | P |
| Object Definitions for Data Collection and Monitoring (DCM) Devices | AASHTO/ITE/NEMA | NTCIP 1206 | P |
| Object Definitions for Closed Circuit Television (CCTV) Switching | AASHTO/ITE/NEMA | NTCIP 1208 | P |
| Data Element Definitions for Transportation Sensor Systems (TSS) | AASHTO/ITE/NEMA | NTCIP 1209 | P |
| Field Management Stations - Part 1: Object Definitions for Signal System Masters | AASHTO/ITE/NEMA | NTCIP 1210 | U |
| Object Definitions for Signal Control and Prioritization | AASHTO/ITE/NEMA | NTCIP 1211 | A |
| TCIP Common Public Transportation (CPT) Objects | AASHTO/ITE/NEMA | NTCIP 1401 | P |
| TCIP Incident Management (IM) Objects | AASHTO/ITE/NEMA | NTCIP 1402 | P |
| TCIP Passenger Information (PI) Objects | AASHTO/ITE/NEMA | NTCIP 1403 | P |
| TCIP Scheduling/Runcutting (SCH) Objects | AASHTO/ITE/NEMA | NTCIP 1404 | P |
| TCIP Spatial Representation (SP) Objects | AASHTO/ITE/NEMA | NTCIP 1405 | P |
| TCIP On-Board (OB) Objects | AASHTO/ITE/NEMA | NTCIP 1406 | P |
| TCIP Control Center (CC) Objects | AASHTO/ITE/NEMA | NTCIP 1407 | P |
| TCIP Fare Collection (FC) Business Area Objects | AASHTO/ITE/NEMA | NTCIP 1408 | P |
| Point to Multi-Point Protocol Using RS-232 Subnetwork Profile | AASHTO/ITE/NEMA | NTCIP 2101 | P |
| Point to Multi-Point Protocol Using FSK Modem Subnetwork Profile | AASHTO/ITE/NEMA | NTCIP 2102 | P |
| Point-to-Point Protocol Over RS-232 Subnetwork Profile | AASHTO/ITE/NEMA | NTCIP 2103 | P |
| Ethernet Subnetwork Profile | AASHTO/ITE/NEMA | NTCIP 2104 | P |
| Transportation Transport Profile | AASHTO/ITE/NEMA | NTCIP 2201 | P |
| Internet (TCP/IP and UDP/IP) Transport Profile | AASHTO/ITE/NEMA | NTCIP 2202 | P |
| Simple Transportation Management Framework (STMF) Application Profile | AASHTO/ITE/NEMA | NTCIP 2301 | P |
| Trivial File Transfer Protocol (TFTP) Application Profile | AASHTO/ITE/NEMA | NTCIP 2302 | P |
| File Transfer Protocol (FTP) Application Profile | AASHTO/ITE/NEMA | NTCIP 2303 | P |
| Application Profile for DATEX-ASN (AP-DATEX) | AASHTO/ITE/NEMA | NTCIP 2304 | P |
| Application Profile for CORBA (AP-CORBA) | AASHTO/ITE/NEMA | NTCIP 2305 | S |

| Standard Name | SDO | Document ID | Status* |
|---|---|---|---|
| Application Profile for XML Message Encoding and Transport in ITS C2C Communications | AASHTO/ITE/NEMA | NTCIP 2306 | B |
| Information Profile for DATEX | AASHTO/ITE/NEMA | NTCIP 2501 | S |
| Information Profile for CORBA | AASHTO/ITE/NEMA | NTCIP 2502 | S |
| Commercial Vehicle Safety Reports | ANSI | ANSI TS284 | P |
| Commercial Vehicle Safety and Credentials Information Exchange | ANSI | ANSI TS285 | P |
| Commercial Vehicle Credentials | ANSI | ANSI TS286 | P |
| Electronic Filing of Tax Return Data | ANSI | ANSI TS813 | P |
| Transit Communications Interface Profile | APTA | TCIP-S-001 | P |
| Standard Specification for Dedicated Short Range Communication (DSRC) Physical Layer using Microwave in the 902-928 MHz Band | ASTM | ASTM E2158-01 | P |
| Standard Specification for Telecommunications and Information Exchange Between Roadside and Vehicle Systems - 5 GHz Band Dedicated Short Range Communications (DSRC) Medium Access Control (MAC) and Physical Layer (PHY) Specifications | ASTM | ASTM E2213-03 | P |
| Standard Practice for Metadata to Support Archived Data Management Systems | ASTM | ASTM WK7592 | U |
| Standard Specification for Archiving ITS Generated Traffic Monitoring Data | ASTM | ASTM WK7604 | U |
| Standard Provisional Specification for Dedicated Short Range Communication (DSRC) Data Link Layer | ASTM | ASTM PS 105-99 | S |
| Logical Link (Layer 2) for DSRC 5.9 GHz | IEEE | IEEE 802.2 | P |
| Standard for Message Sets for Vehicle/Roadside Communications | IEEE | IEEE 1455-1999 | P |
| Standard for Common Incident Management Message Sets (IMMS) for use by EMCs | IEEE | IEEE 1512-2006 | P |
| Standard for Traffic Incident Management Message Sets for Use by EMCs | IEEE | IEEE 1512.1-2006 | P |
| Standard for Public Safety IMMS for use by EMCs | IEEE | IEEE 1512.2-2004 | P |
| Standard for Hazardous Material IMMS for use by EMCs | IEEE | IEEE 1512.3-2006 | P |
| Standard for Common Traffic Incident Management Message Sets for Use in Entities External to Centers | IEEE | IEEE 1512.4 | U |
| Standard for Interface Between the Rail Subsystem and the Highway Subsystem at a Highway Rail Intersection | IEEE | IEEE 1570-2002 | P |
| Resource Manager for DSRC 5.9 GHz | IEEE | IEEE 1609.1 | U |
| Application Services (Layers 6,7) for DSRC 5.9 GHz | IEEE | IEEE 1609.2 | U |
| Communications Services (Layers 4,5) for DSRC 5.9 GHz (Future Standard) | IEEE | IEEE 1609.3 | U |
| Medium Access Control (MAC) Extension & the MAC Extension Management Entity for DSRC 5.9 GHz | IEEE | IEEE 1609.4 | U |
| Networking Services (Layer 3) for DSRC 5.9 GHz | ISO | ISO 21210 | U |

***Status (as of December 2006):**

P – Published: Standards that are available for purchase.

A – Approved: Standards that have passed all necessary ballots and have been approved by a standards development organization, but not yet published.

B – In Ballot: Standards that are being voted upon by a committee or working group, or are undergoing other SDO procedures.

U – Under Development: Standards that are being written, but are not yet ready for a formal ballot.

S – Standard Development Work has been suspended; or standards have been withdrawn.

| Standard Name | SDO | Document ID | Status* |
|---|---|---|---|
| Standard for Functional Level Traffic Management Data Dictionary (TMDD) | ITE | ITE TM 1.03 | A |
| Message Sets for External TMC Communication (MS/ETMCC) | ITE | ITE TM 2.01 | A |
| Location Referencing Message Specification (LRMS) | SAE | SAE J2266 | P |
| Message Set for Advanced Traveler Information System (ATIS) | SAE | SAE J2354 | P |
| Standard for ATIS Message Sets Delivered Over Reduced Bandwidth Media | SAE | SAE J2369 | P |
| Messages for Handling Strings and Look-Up Tables in ATIS Standards | SAE | SAE J2540 | P |
| RDS (Radio Data System) Phrase Lists | SAE | SAE J2540-1 | P |
| ITIS (International Traveler Information Systems) Phrase Lists | SAE | SAE J2540-2 | P |
| National Names Phrase List | SAE | SAE J2540-3 | P |

***Status (as of December 2006):**

P – Published: Standards that are available for purchase.

A – Approved: Standards that have passed all necessary ballots and have been approved by a standards development organization, but not yet published.

B – In Ballot: Standards that are being voted upon by a committee or working group, or are undergoing other SDO procedures.

U – Under Development: Standards that are being written, but are not yet ready for a formal ballot.

S – Standard Development Work has been suspended; or standards have been withdrawn.

**Table 8-2. Key ITS Standards Application Area Matrix**

| | | | Center to Center | | | | | | Center to Roadside | | | | | | | Center to Vehicle/Traveler | | | Roadside to Roadside | Roadside to Vehicle | |
|---|---|---|---|---|---|---|---|---|---|---|---|---|---|---|---|---|---|---|---|---|---|
| **SDO** | **Doc ID** | **Standard Name** | **Data Archival** | **Incident Management** | **Rail Coordination** | **Traffic Management** | **Transit Management** | **Traveler Information** | **Data Collection/Monitoring** | **Dynamic Message Signs** | **Environmental Monitoring** | **Ramp Metering** | **Traffic Signals** | **Vehicle Sensors** | **Video Surveillance** | **Mayday** | **Transit Vehicle Communications** | **Traveler Information** | **Highway Rail Intersection (HRI)** | **Signal Priority** | **Toll/Fee Collection** |
| AASHTO | 1101 | Simple Transportation Management Framework (STMF) | | | | | | | ● | ● | ● | ● | ● | ● | ● | | | | | | |
| AASHTO | 1102 | Octet Encoding Rules (OER) Base Protocol | ● | ● | ● | ● | ● | ● | ● | ● | ● | ● | ● | ● | ● | | | | | | |
| AASHTO | 1103 | Transportation Management Protocols (TMP) | | | | | | | ● | ● | ● | ● | ● | ● | ● | | | | | | |
| AASHTO | 1104 | Center-to-Center Naming Convention Specification | ● | ● | ● | ● | ● | ● | | | | | | | | | | | | | |
| AASHTO | 1105 | CORBA Security Service Specification | ● | ● | ● | ● | ● | ● | | | | | | | | | | | | | |
| AASHTO | 1106 | CORBA Near-Real Time Data Service Specification | ● | ● | ● | ● | ● | ● | | | | | | | | | | | | | |
| AASHTO | 1201 | Global Object Definitions | | ● | | | | | ● | ● | ● | ● | ● | ● | ● | | | | | ● | |
| AASHTO | 1202 | Object Definitions for Actuated Traffic Signal Controller Units | | | | | | | | | | | ● | | | | | | | | |
| AASHTO | 1203 | Object Definitions for Dynamic Message Signs (DMS) | | | | | | | | ● | | | | | | | | | | | |
| AASHTO | 1204 | Environmental Sensor Station (ESS) Interface Standard | | | | | | | ● | | ● | | | | | | | | | | |
| AASHTO | 1205 | Object Definitions for Closed Circuit Television (CCTV) Camera Control | | | | | | | ● | | | | | ● | ● | | | | | | |

| | | | Center to Center | | | | | | Center to Roadside | | | | | | | Center to Vehicle/Traveler | | | Roadside to Roadside | Roadside to Vehicle | |
|---|---|---|---|---|---|---|---|---|---|---|---|---|---|---|---|---|---|---|---|---|---|
| **SDO** | **Doc ID** | **Standard Name** | **Data Archival** | **Incident Management** | **Rail Coordination** | **Traffic Management** | **Transit Management** | **Traveler Information** | **Data Collection/Monitoring** | **Dynamic Message Signs** | **Environmental Monitoring** | **Ramp Metering** | **Traffic Signals** | **Vehicle Sensors** | **Video Surveillance** | **Mayday** | **Transit Vehicle Communications** | **Traveler Information** | **Highway Rail Intersection (HRI)** | **Signal Priority** | **Toll/Fee Collection** |
| AASHTO | 1206 | Object Definitions for Data Collection and Monitoring (DCM) Devices | | | | | | | ● | | ● | | | ● | | | | | | | |
| AASHTO | 1208 | Object Definitions for Closed Circuit Television (CCTV) Switching | | | | | | | ● | | | | | ● | ● | | | | | | |
| AASHTO | 1209 | Data Element Definitions for Transportation Sensor Systems (TSS) | | | | | | | ● | | | ● | ● | ● | | | | | | | |
| AASHTO | 1210 | Field Management Stations - Part 1: Object Definitions for Signal System Masters | | | | ● | | | | | | | ● | | | | | | | | |
| AASHTO | 1211 | Object Definitions for Signal Control and Prioritization | | ● | | | | | | | | | | | | | | | | ● | |
| AASHTO | 1401 | TCIP Common Public Transportation (CPT) Objects | ● | | | | ● | | | | | | | | | | ● | | | | |
| AASHTO | 1402 | TCIP Incident Management (IM) Objects | ● | ● | | | ● | | | | | | | | | ● | ● | | | | |
| AASHTO | 1403 | TCIP Passenger Information (PI) Objects | ● | | | | ● | | | | | | | | | | ● | ● | | | |
| AASHTO | 1404 | TCIP Scheduling/Runcutting (SCH) Objects | ● | | | | ● | | | | | | | | | | ● | | | | |
| AASHTO | 1405 | TCIP Spatial Representation (SP) Objects | ● | | | | | | | | | | | | | | | | | | |
| AASHTO | 1406 | TCIP On-Board (OB) Objects | ● | | | | | | | | | | | | | ● | ● | | | | |
| AASHTO | 1407 | TCIP Control Center (CC) Objects | ● | | | | ● | | | | | | | | | ● | ● | | | | |

| | | | Center to Center | | | | | | Center to Roadside | | | | | | | Center to Vehicle/Traveler | | | Roadside to Roadside | Roadside to Vehicle | |
|---|---|---|---|---|---|---|---|---|---|---|---|---|---|---|---|---|---|---|---|---|---|
| **SDO** | **Doc ID** | **Standard Name** | **Data Archival** | **Incident Management** | **Rail Coordination** | **Traffic Management** | **Transit Management** | **Traveler Information** | **Data Collection/Monitoring** | **Dynamic Message Signs** | **Environmental Monitoring** | **Ramp Metering** | **Traffic Signals** | **Vehicle Sensors** | **Video Surveillance** | **Mayday** | **Transit Vehicle Communications** | **Traveler Information** | **Highway Rail Intersection (HRI)** | **Signal Priority** | **Toll/Fee Collection** |
| AASHTO | 1408 | TCIP Fare Collection (FC) Business Area Objects | ● | | | | ● | | | | | | | | | | ● | ● | | | |
| AASHTO | 2101 | Point to Multi-Point Protocol Using RS-232 Subnetwork Profile | | | | | | | ● | ● | ● | ● | ● | ● | ● | | | | | | |
| AASHTO | 2102 | Point to Multi-Point Protocol Using FSK Modem Subnetwork Profile | | | | | | | ● | ● | ● | ● | ● | ● | ● | | | | | | |
| AASHTO | 2103 | Point-to-Point Protocol Over RS-232 Subnetwork Profile | | | | | | | ● | ● | ● | ● | ● | ● | ● | | | | | | |
| AASHTO | 2104 | Ethernet Subnetwork Profile | ● | ● | ● | ● | ● | ● | ● | ● | ● | ● | ● | ● | ● | | | | | | |
| AASHTO | 2201 | Transportation Transport Profile | | | | | | | ● | ● | ● | ● | ● | ● | ● | | | | | | |
| AASHTO | 2202 | Internet (TCP/IP and UDP/IP) Transport Profile | ● | ● | ● | ● | ● | ● | ● | ● | ● | ● | ● | ● | ● | | | | | | |
| AASHTO | 2301 | Simple Transportation Management Framework (STMF) Application Profile | | | | | | | ● | ● | ● | ● | ● | ● | ● | | | | | | |
| AASHTO | 2302 | Trivial File Transfer Protocol (TFTP) Application Profile | | | | | | | ● | ● | ● | | | ● | ● | | | | | | |
| AASHTO | 2303 | File Transfer Protocol (FTP) Application Profile | ● | ● | ● | ● | ● | ● | ● | ● | ● | | | ● | ● | | | | | | |
| AASHTO | 2304 | Application Profile for DATEX-ASN (AP-DATEX) | ● | ● | ● | ● | ● | ● | | | | | | | | | | | | | |
| AASHTO | 2305 | Application Profile for CORBA (AP-CORBA) | ● | ● | ● | ● | ● | ● | | | | | | | | | | | | | |
| AASHTO | 2306 | Application Profile for XML Message Encoding and Transport in ITS C2C Communications | ● | ● | ● | ● | ● | ● | | | | | | | | | | | | | |

| | | | Center to Center | | | | | | Center to Roadside | | | | | | | Center to Vehicle/Traveler | | | Roadside to Roadside | Roadside to Vehicle | |
|---|---|---|---|---|---|---|---|---|---|---|---|---|---|---|---|---|---|---|---|---|---|
| **SDO** | **Doc ID** | **Standard Name** | **Data Archival** | **Incident Management** | **Rail Coordination** | **Traffic Management** | **Transit Management** | **Traveler Information** | **Data Collection/Monitoring** | **Dynamic Message Signs** | **Environmental Monitoring** | **Ramp Metering** | **Traffic Signals** | **Vehicle Sensors** | **Video Surveillance** | **Mayday** | **Transit Vehicle Communications** | **Traveler Information** | **Highway Rail Intersection (HRI)** | **Signal Priority** | **Toll/Fee Collection** |
| AASHTO | 2501 | Information Profile for DATEX | ● | ● | ● | ● | ● | ● | | | | | | | | | | | | | |
| AASHTO | 2502 | Information Profile for CORBA | ● | ● | ● | ● | ● | ● | | | | | | | | | | | | | |
| ANSI | TS285 | Commercial Vehicle Safety and Credentials Information Exchange | ● | | | | | | | | | | | | | | | | | | |
| ANSI | TS286 | Commercial Vehicle Credentials | ● | | | | | | | | | | | | | | | | | | |
| APTA | TCIP-S-001 | Transit Communications Interface Profile | | ● | | | ● | | | | | | | | | ● | ● | ● | | | |
| ASTM | E2158-01 | Standard Specification for Dedicated Short Range Communication (DSRC) Physical Layer using Microwave in the 902-928 MHz Band | | | | | | | | | | | | | | | | | | ● | ● |
| ASTM | E2213-03 | Standard Specification for Telecommunications and Information Exchange Between Roadside and Vehicle Systems - 5 GHz Band Dedicated Short Range Communications (DSRC) Medium Access Control (MAC) and Physical Layer (PHY) Specifications | | | | | | | | | | | | | | | | | | ● | ● |
| ASTM | WK7592 | Standard Practice for Metadata to Support Archived Data Management Systems | ● | | | | | | | | | | | | | | | | | | |

| | | | Center to Center | | | | | | Center to Roadside | | | | | | | Center to Vehicle/Traveler | | | Roadside to Roadside | Roadside to Vehicle | |
|---|---|---|---|---|---|---|---|---|---|---|---|---|---|---|---|---|---|---|---|---|---|
| **SDO** | **Doc ID** | **Standard Name** | **Data Archival** | **Incident Management** | **Rail Coordination** | **Traffic Management** | **Transit Management** | **Traveler Information** | **Data Collection/Monitoring** | **Dynamic Message Signs** | **Environmental Monitoring** | **Ramp Metering** | **Traffic Signals** | **Vehicle Sensors** | **Video Surveillance** | **Mayday** | **Transit Vehicle Communications** | **Traveler Information** | **Highway Rail Intersection (HRI)** | **Signal Priority** | **Toll/Fee Collection** |
| ASTM | WK7604 | Standard Specification for Archiving ITS Generated Traffic Monitoring Data | ● | | | | | | | | | | | | | | | | | | |
| ASTM | PS 105-99 | Standard Provisional Specification for Dedicated Short Range Communication (DSRC) Data Link Layer | | | | | | | | | | | | | | | | | | ● | |
| IEEE | 802.2 | Logical Link (Layer 2) for DSRC 5.9 GHz | | | | | | | | | | | | | | | | | | ● | ● |
| IEEE | 1455-1999 | Standard for Message Sets for Vehicle/Roadside Communications | | | | | | | | | | | | | | | | | | | ● |
| IEEE | 1512-2000 | Standard for Common Incident Management Message Sets (IMMS) for use by EMCs | ● | ● | | | | | | | | | | | | | | | | | |
| IEEE | 1512.1-2003 | Standard for Traffic Incident Management Message Sets for Use by EMCs | ● | ● | | ● | | | | | | | | | | | | | | | |
| IEEE | 1512.2-2004 | Standard for Public Safety IMMS for use by EMCs | ● | ● | | | | | | | | | | | | | | | | | |
| IEEE | 1512.3-2002 | Standard for Hazardous Material IMMS for use by EMCs | ● | ● | | | | | | | | | | | | | | | | | |
| IEEE | 1512.4 | Standard for Common Traffic Incident Management Message Sets for Use in Entities External to Centers | ● | ● | | | | | | | | | | | | | | | | | |

| | | | Center to Center | | | | | | Center to Roadside | | | | | | | Center to Vehicle/Traveler | | | Roadside to Roadside | Roadside to Vehicle | |
|---|---|---|---|---|---|---|---|---|---|---|---|---|---|---|---|---|---|---|---|---|---|
| **SDO** | **Doc ID** | **Standard Name** | **Data Archival** | **Incident Management** | **Rail Coordination** | **Traffic Management** | **Transit Management** | **Traveler Information** | **Data Collection/Monitoring** | **Dynamic Message Signs** | **Environmental Monitoring** | **Ramp Metering** | **Traffic Signals** | **Vehicle Sensors** | **Video Surveillance** | **Mayday** | **Transit Vehicle Communications** | **Traveler Information** | **Highway Rail Intersection (HRI)** | **Signal Priority** | **Toll/Fee Collection** |
| IEEE | 1570-2002 | Standard for Interface Between the Rail Subsystem and the Highway Subsystem at a Highway Rail Intersection | | | | | | | | | | | | | | | | | ● | | |
| IEEE | 1609.1 | Resource Manager for DSRC 5.9 GHz | | | | | | | | | | | | | | | | | | ● | ● |
| IEEE | 1609.2 | Application Services (Layers 6,7) for DSRC 5.9 GHz | | | | | | | | | | | | | | | | | | ● | ● |
| IEEE | 1609.3 | Communications Services (Layers 4,5) for DSRC 5.9 GHz | | | | | | | | | | | | | | | | | | ● | ● |
| IEEE | 1609.4 | Medium Access Control (MAC) Extension & the MAC Extension Management Entity for DSRC 5.9 GHz | | | | | | | | | | | | | | | | | | ● | ● |
| ISO | 21210 | Networking Services (Layer 3) for DSRC 5.9 GHz | | | | | | | | | | | | | | | | | | ● | ● |
| ITE | TM 1.03 | Standard for Functional Level Traffic Management Data Dictionary (TMDD) | ● | ● | | ● | ● | | | | | | | | | | | | | | |
| ITE | TM 2.01 | Message Sets for External TMC Communication (MS/ETMCC) | ● | ● | | ● | ● | | | | | | | | | | | | | | |
| SAE | J2266 | Location Referencing Message Specification (LRMS) | ● | ● | ● | ● | ● | ● | ● | ● | ● | ● | ● | ● | ● | ● | ● | ● | | | |
| SAE | J2354 | Message Set for Advanced Traveler Information System (ATIS) | ● | | | ● | ● | ● | | | | | | | | ● | ● | ● | | | |
| SAE | J2369 | Standard for ATIS Message Sets Delivered Over Reduced Bandwidth Media | | | | | | | | | | | | | | | | ● | | | |

| | | | Center to Center | | | | | | Center to Roadside | | | | | | | Center to Vehicle/Traveler | | | Roadside to Roadside | Roadside to Vehicle | |
|---|---|---|---|---|---|---|---|---|---|---|---|---|---|---|---|---|---|---|---|---|---|
| **SDO** | **Doc ID** | **Standard Name** | **Data Archival** | **Incident Management** | **Rail Coordination** | **Traffic Management** | **Transit Management** | **Traveler Information** | **Data Collection/Monitoring** | **Dynamic Message Signs** | **Environmental Monitoring** | **Ramp Metering** | **Traffic Signals** | **Vehicle Sensors** | **Video Surveillance** | **Mayday** | **Transit Vehicle Communications** | **Traveler Information** | **Highway Rail Intersection (HRI)** | **Signal Priority** | **Toll/Fee Collection** |
| SAE | J2540 | Messages for Handling Strings and Look-Up Tables in ATIS Standards | ● | | | ● | ● | ● | | | | | | | | ● | ● | ● | | | |
| SAE | J2540-1 | RDS (Radio Data System) Phrase Lists | ● | | | ● | ● | ● | | | | | | | | ● | ● | ● | | | |
| SAE | J2540-2 | ITIS (International Traveler Information Systems) Phrase Lists | ● | | | ● | ● | ● | | | | | | | | ● | ● | ● | | | |
| SAE | J2540-3 | National Names Phrase List | ● | | | ● | ● | ● | | | | | | | | ● | ● | ● | | | |

THIS PAGE INTENTIONALLY LEFT BLANK

# 9. PROJECT SEQUENCING

A project sequence defines the order in which ITS projects may be implemented. A good sequence is based on a combination of two factors:

- **Prioritization of projects based on existing conditions and stakeholder needs.** The ITS projects were prioritized to reflect a deployment path (sequence) on stakeholder needs. Although the information collected through stakeholder surveys and meetings was the basis of the ITS architecture; technology, funding opportunities and requirements continue to evolve. It is expected the Mississippi DOT will reevaluate and reprioritize projects frequently.

- **Project dependencies, based on how successive ITS projects can build upon one another.** Project dependencies influence the project sequencing. It is beneficial to identify the information and functional dependencies between projects.

In most cases, the sequence of currently planned projects has already been programmed and can simply be extracted from existing transportation plans. Successive projects will then be added to the sequence based on the project dependencies and other planning factors.

The process for determining the sequence of projects for the Gulf Region ITS Architecture includes three steps:

- Review of the Mississippi Statewide ITS Architecture;
- Review of relevant planning documents; and
- Stakeholder feedback.

The Gulf Region ITS Architecture represents a roadmap for transportation systems deployment and integration in the Gulf region over the next 20 years. A list of ITS projects that are planned over the next 20 years was identified and is shown in Table 9-1. At this time there is no true sequencing of ITS projects for the Gulf region, however the list was further refined to establish which projects were allocated to the short term (within 5 years), medium term (5 to 10 years), and long term (over 10 years). This provided a priority for the list of projects denoting a general order for project implementation. It should be noted, however, that Table 9-1 does not include all planned ITS projects within the region. It mainly consists of projects that may have implications to ITS operations and management at local and regional levels.

**Table 9-1. Planned ITS Projects for the Mississippi Gulf Region**

| Project | Description | Timeframe* | Dependency |
|---|---|---|---|
| City of Biloxi Closed Loop Signal System | This project includes the infrastructure and technology to support the deployment of a closed-loop signal control system; infrastructure could include new communication technologies such as fiber optic communications or wireless technology. | Short Term | Stand Alone |
| City of Biloxi Emergency Vehicle Preemption | Deploy signal preemption in corridors with a high density of emergency vehicle response vehicles (e.g. fire routes) and congested traffic conditions. | Short Term | Stand Alone |
| City of Pascagoula Emergency Vehicle Preemption | Deploy signal preemption in corridors with a high density of emergency vehicle response vehicles (e.g. fire routes) and congested traffic conditions. | Short Term | Stand Alone |
| City/County Trailblazer Signs for Evacuation | This project would provide for the deployment of emergency evacuation trailblazer signs throughout the Gulf region to facilitate the evacuation of residents and visitors along designated evacuation routes. | Short Term | Stand Alone |
| Jackson County Consolidated 911 Dispatch Center | This project will consolidate six current 911 dispatch centers into a central location. Dispatch centers include those in Moss Point, Gautier, Ocean Springs, and Pascagoula, as well as two dispatch centers operated by Jackson County. Police, fire, medical and animal control will all be dispatched. | Short Term | Stand Alone |
| Gulfport-Biloxi International Airport Emergency Telephone System | Deploy an emergency telephone system to enhance airport security. | Short Term | Stand Alone |
| Gulfport-Biloxi International Airport Security Monitoring System | This project would expand and enhance the existing security system at the airport. | Short Term | Stand Alone |
| Coast Transit Authority On-board Security Monitoring System | This project includes the deployment of an on-board security monitoring system that may include CCTV on transit vehicles as well as remote alarm capability. | Short Term | Stand Alone |

| Project | Description | Timeframe* | Dependency |
|---|---|---|---|
| MDOT District 6 TMC | This project includes the development of a fully operational Traffic Management Center for the Gulf Region. Initially, the center will start out small with responsibility for controlling traffic signals. The center will then integrate other ITS elements such as DMS, HAR, and CCTV. | Short Term | Stand Alone |
| MDOT Fog Detection Systems on I-10/Gulf Coast | This project will enable the motorists to be informed of fog related advisories. A detection system using sensors will enable the District 6 TMC to transmit fog related advisories to motorists in the affected areas. These advisories can be transmitted via HAR, DMS, or local television. The Gulf Coast area is prone to fog and is a suitable location for deployment of such systems. | Short Term | MDOT District 6 TMC |
| MDOT Emergency Vehicle Signal Preemption | This project will deploy signal preemption in corridors in urban areas with high density of emergency vehicle response vehicles (e.g. fire routes) and congested traffic conditions. | Short Term | Stand Alone |
| Mississippi Automated System Project | This project will enhance public safety among law enforcement, fire, and EMS agencies. It will provide secure access to critical data, jail management and records management or computer aided dispatch information. Two centralized (redundant) data centers will be created to support data exchange. | Short Term | Stand Alone |
| County and City Portable DMS | Used to direct traffic for special events, maintenance and construction, and incident management. | Short Term | Stand Alone |
| MDOT Highway Service Patrol | In the medium term MDOT should deploy 1-2 vehicles operating on fixed routes in the Gulf Region and will communicate with the MDOT District 6 TMC via voice communications. In the long term additional vehicles/routes can be added. Vehicles will be equipped with AVL capability. | Short Term | MDOT District 6 TMC |
| County and City Signal System Upgrades | This project would allow for the interconnection of signals through a corridor to facilitate more efficient movement of traffic, particularly during peak travel times. | Short/Medium Term | Stand Alone |
| City of Biloxi CCTV System | This project includes the deployment of a CCTV system for monitoring key locations in the city. CCTV images could be transmitted not only to the City, but also to MDOT District 6 as well as Emergency Operations Centers. | Medium Term | Stand Alone |

| Project | Description | Timeframe* | Dependency |
|---|---|---|---|
| City of Biloxi Traffic Sensor Network | This project includes the deployment of intrusive and/or non-intrusive vehicle detectors for capturing traffic volume and speed data on City roadways. This detector network could also include incident detection functions for traffic management. | Medium Term | Stand Alone |
| City of Biloxi Red Light Running Program | This project includes all components necessary to implement a traffic signal red light running enforcement program, including cameras, signage, etc. | Medium Term | Stand Alone |
| City of Gulfport CCTV System | This project includes the deployment of a CCTV system for monitoring key locations in the city. CCTV images could be transmitted not only to the City, but also to MDOT District 6 as well as Emergency Operations Centers. | Medium Term | Stand Alone |
| City of Gautier CCTV System | This project includes the deployment of a CCTV system for monitoring key locations in the city. CCTV images could be transmitted not only to the City, but also to MDOT District 6 as well as Emergency Operations Centers. | Medium Term | Stand Alone |
| Coast Transit Authority AVL System | This project will facilitate installation of an Automated Vehicle Location system on transit vehicles. CTA has already installed RouteMatch® dispatch software for transit fleet operations. | Medium Term | Stand Alone |
| Coast Transit Authority Electronic Fare Payment System | This project would implement an electronic payment system for fare collection. This system could be developed in tandem with other agencies to allow electronic payment for other services such as parking. | Medium Term | Stand Alone |
| Gulfport-Biloxi International Airport Parking Electronic Payment System | This project includes the development and deployment of an electronic payment system. This project could potentially leverage electronic technology deployed to support transit or other operations using electronic payment systems. | Medium Term | Stand Alone |
| Gulfport-Biloxi International Airport Dynamic Message Signs | Install DMS signs to provide traveler information to motorists traveling to the airport at key points on surrounding roadways. | Medium Term | Stand Alone |
| MDOT Communication Backbone | This project will establish a more permanent approach for the primary communication links between MDOT Central Office and the District 6 TMC. | Medium Term | Stand Alone |

| Project | Description | Timeframe* | Dependency |
|---|---|---|---|
| MDOT Highway Advisory Radio | This project will include an installation of HAR on high accident routes and in the vicinity of major attractions, airports, and parking facilities in the Gulf region. | Medium Term | Stand Alone |
| MDOT Regional Incident Management | This project will define agency roles, responsibilities, operations, and procedures for interurban incident management. Methods of incident detection, verification, motorist information, response, site management and clearance will be covered. The project may include the deployment of such devices as CCTV and vehicle detection. | Medium Term | MDOT District 6 TMC & MDOT Communication Backbone |
| MDOT Cellular Phone System for Incident Reporting | This project enables motorists to report incidents to the MDOT TMC using a cellular phone number such as *999. When used statewide, these systems could allow users to contact the local law enforcement, towing companies, ambulance services and local transportation organizations highway helper vehicles. | Medium Term | Stand Alone |
| MDOT Weather Sensors | Weather sensors to collect pavement, surface, and ambient temperature, wind speed and direction, pavement wet/dry, precipitation and relative humidity could be deployed. Communication links with MDOT sensors in rural areas will be installed. | Medium Term | Stand Alone |
| Multimodal Transit Centers | This project would create facilities in Biloxi and Gulfport that would house all regional transit operators including Coast, Greyhound, Taxi, and Casino Park and Ride. | Medium Term | Stand Alone |
| City of Pascagoula Barrier System | This project would provide for the deployment of movable and/or fixed barriers to control access to the City during or after a major incident or emergency situation. | Long Term | Stand Alone |
| City of Pascagoula Emergency Vehicle Navigation System | This project would include the installation of an in-vehicle navigation system to assist emergency vehicles in selecting the most efficient route when responding to an emergency call. This system may be linked to other traffic management system components that advise the emergency vehicles of congestion along the selected route. | Long Term | Stand Alone |
| City of Pascagoula Parking Access DMS | This project would provide for the deployment of strategically located DMS signs that would be used to direct motorists to designated parking locations. | Long Term | Stand Alone |
| Coast Transit Authority Transit Signal Priority | This project would provide traffic signal priority for CTA transit vehicles along designated routes in the Gulf region. This project would require agreement by and coordination with the jurisdictions that would have transit signal priority. | Long Term | Stand Alone |

| Project | Description | Timeframe* | Dependency |
|---|---|---|---|
| Harrison County 911 Dispatch Center | This project would provide for a central 911 dispatch center that would allow for the co-location of the County Emergency Operations Center. | Long Term | Stand Alone |
| Gulfport-Biloxi International Airport Remotely Controlled Gate System | Deploy a remotely controlled gate system that will control roadway access to the airport during incidents, natural disasters, situations requiring added security, and other emergency situations. | Long Term | Stand Alone |
| MDOT Speed Warning System | Regional initiative with particular applicability in high accident locations and areas prone to fog (e.g. Gulf Coast). | Long Term | Stand Alone |
| MDOT Railroad Crossing Control | The deployment of integrated train detection and traffic control is considered a cost effective, near-term deployment as a result of the ability to deploy individual systems in select areas, and the commercial availability of such systems. | Long Term | Stand Alone |
| MDOT/Rail Operators Railroad Operations Coordination | This project will provide coordination between rail operations and traffic management centers. Rail operators should include: Kansas City Southern and Canadian National / Illinois Central, CSC, BNSF, Norfolk Southern Railroads. | Long Term | Stand Alone |
| City of Gautier Integrated Rail Signals | This project would provide for coordinating traffic signal operations with rail signals to improve safety at rail crossings. | Long Term | Stand Alone |
| City of Pascagoula Highway Advisory Radio | This project would provide HAR broadcasts to city motorists with current traffic conditions in the City and surrounding roadway network. | Long Term | Stand Alone |
| City of Pascagoula Lane Control Devices | This project would provide electronic directional signs and other devices to facilitate efficient hurricane evacuation. | Long Term | Stand Alone |
| County and City Smart Parking Management Systems | Smart parking systems will include transit information signs, information kiosks during parking facility/garage construction. | Long Term | Stand Alone |

THIS PAGE INTENTIONALLY LEFT BLANK

# 10. AGREEMENTS

The Gulf Region ITS Architecture provides both a technical and institutional framework for the deployment of ITS in the Gulf Coast region of Mississippi. Institutional integration involves cooperation and coordination between various agencies and jurisdictions to achieve seamless operations and interoperability.

The previous sections of the report identified the stakeholder roles and responsibilities, key market packages, and ITS deployment activities that would require establishment of an electronic link between and among organizations. From an institutional integration perspective, these electronic links or interfaces may require the establishment of some form of agreement to define the roles and responsibilities of each party.

There are several types of arrangements associated with the interfaces identified in the Gulf Region ITS Architecture. Information sharing and exchanges between systems require knowledge of the transmission protocol and data formats to ensure compatibility. Coordinating field device operations owned by different agencies requires defined procedures for submitting message requests and rules governing when such requests can be honored. Such coordination may be done with informal arrangements such as a Memorandum of Understanding (MOU). Sharing control of field devices operated by different agencies could involve more liability issues, which may require more formal agreements. Coordinated incident response may also require formal agreements, but also requires group training of personnel from various agencies. Agreements may be obtained for data sharing, procedure, operation, maintenance, and training.

Some common types of agreements are listed in Table 10-1. The agreement process may begin with something as simple as a handshake agreement. But, once interconnections and integration of systems begin, agencies may want to have something more substantial in place. A documented agreement will aid agencies in planning their operational costs, understanding their respective roles and responsibilities and build trust for future projects. Formal agreements may be necessary where funding or financial arrangements are defined or participation in large regionally significant projects is required.

Table 10-2 provides a list of the existing agreements identified in the stakeholder survey.

Table 10-3 presents a list of existing and potential agreements that would be required for the implementation and operations of an integrated ITS system in the gulf region.

**Table 10-1. Types of Agreements**

| Type of Agreement | Description |
|---|---|
| Handshake Agreement | ▪ Early agreement between one or more partners.<br>▪ Not recommended for long term operations. |
| Memorandum of Understanding (MOU) | ▪ Initial agreement used to provide minimal detail and usually demonstrating a general consensus.<br>▪ Used to expand a more detailed agreement like an Interagency Agreement that may be broad in scope but contains all of the standard contract clauses required by a specific agency.<br>▪ May serve as a means to modify a much broader Master Funding Agreement, allowing the master agreement to cover various ITS projects throughout the region and the MOUs to specify the scope and differences between the projects. |
| Interagency Agreement | ▪ Between public agencies (i.e., transit authorities, cities, counties, etc.) for operations, services or funding.<br>▪ Documents responsibility, functions and liability at a minimum. |
| Intergovernmental Agreement | ▪ Between governmental agencies (i.e., Agreements between universities and State DOT, MPOs and State DOT, etc.). |
| Operational Agreement | ▪ Between any agency involved in funding, operating, maintaining or using the right of way of another public or private agency.<br>▪ Identifies respective responsibilities for all activities associated with shared systems being operated and / or maintained. |
| Funding Agreement | ▪ Documents the funding arrangements for ITS projects (and other projects).<br>▪ Includes at a minimum standard funding clauses, detailed scope, services to be performed, detailed project budgets, etc. |
| Master Agreements | ▪ Standard contract and/or legal verbiage for a specific agency and serving as a master agreement by which all business is done. These agreements can be found in the legal department of many public agencies.<br>▪ Allows states, cities, transit agencies and other public agencies that do business with the same agencies over and over (i.e., cities and counties) to have one Master Agreement that uses smaller agreements (i.e., MOUs, Scope of Work and Budget Modifications, Funding Agreements, Project Agreements, etc.) to modify or expand the boundaries of the larger agreement to include more specific language. |

**Table 10-2. Existing Agreements from Surveys**

| Type of Agreement | Description | Associated Stakeholder |
|---|---|---|
| Interagency Maintenance Agreement | City Engineering departments working to maintain traffic signals in a jurisdiction. | City/County Public Works/Engineering Departments and MDOT |

**Table 10-3. Gulf Region ITS Architecture Potential Agreements**

| Agreement | Description | Associated Stakeholder | Status |
|---|---|---|---|
| Inter-Agency Data Sharing Agreement | Formal agreements are required to cover the exchange of data between different agencies in different regions. However, informally, the exchange of information may occur on an as-needed basis. Data may include traffic flow, video images, road weather, road conditions, etc. | MDOT, MHP, County and City Traffic Management Agencies, County and City Public Safety Agencies, Media Outlets, Private Information Service Providers | Potential |
| Inter-Agency Operations Agreement | Address equipment operation coordination, equipment maintenance, operational information exchange and other issues. Equipment may include traffic signal systems, DMS, CCTV, etc. | MDOT, MHP, County and City Traffic Management Agencies, County and City Public Safety Agencies | Potential |
| Multi-Agency Communi-cation Infrastructure Sharing Agreement | There are multiple examples and opportunities for the sharing of communications infrastructure throughout the regions. A regional plan and subsequent agreements that define responsibilities could result in the communications network required to link the various ITS applications together. | MDOT, County and City | Potential |
| Inter-Agency Road Maintenance/ Snow Removal Agreement | Define roles and responsibilities for roadway maintenance as well as snow removal. | MDOT, County and City Maintenance Agencies | Potential |
| Multi-Agency EMS Communi-cations Integration Agreement | Integrated EMS communications allows for quickly sharing of current incident response status between allied response agencies and creates a flow of information that reduces or eliminates delay due to a lag in communications. | County and City Public Safety Agencies | Potential |

| Agreement | Description | Associated Stakeholder | Status |
|---|---|---|---|
| Multi-Agency Incident Response Coordination Agreement | Support incident information exchange, incident response coordination, resource coordination, etc. among multiple agencies in different regions. | MDOT, MHP, County and City Public Safety Agencies, County and City Traffic Management and Maintenance Agencies, other agencies | Potential |
| Multi-Agency Disaster Response Coordination Agreement | Define roles, responsibilities, and functions for disaster response, recovery and evacuation and reentry management. | Mississippi Public Safety Division, MEMA, MDOT, MHP, County and City Public Safety Agencies, County and City Traffic Management and Maintenance Agencies, Transit Agencies, other agencies | Potential |
| Multi-Agency Disaster Information Coordination Agreement | Define roles, responsibilities and functions for accessing and disseminating disaster information. | Mississippi Public Safety Division, MHP, MDOT, MEMA, County and City Public Safety Agencies | Potential |
| Multi-Agency Limited Liability Agreements | Agreements will be developed to address the varying levels of liability limitation associated with the various agencies that would need to work together to enable coordinated, multi-agency transportation and emergency management strategies. | Agencies involved in transportation and emergency management. | Potential |
| Transit Electronic Payment Agreement | Support transit electronic payment systems. Agreements may define roles and responsibilities of transit agencies and financial institution to share information such as revenue from smart cards, etc. | Transit Agencies, Parking Operators, Financial Institutions | Potential |
| Transit Bus Signal Priority Agreement | Allow transit vehicles to activate signal priority at signalized intersections. | Transit Agencies, MDOT, County and City Traffic Management Agencies | Potential |

| Agreement | Description | Associated Stakeholder | Status |
|---|---|---|---|
| Emergency Vehicle Signal Preemption Agreement | Define roles, responsibilities and functions for emergency vehicle preemption at signalized intersections | County and City Public Safety Agencies, MDOT, MHP, County and City Traffic Management Agencies | Potential |
| Railroad Crossing Management Agreement | Define roles, responsibilities and functions for rail grade crossing coordination and optimization at signalize intersections. | Railroad Companies, MDOT, County and City Traffic Management Agencies | Potential |

THIS PAGE INTENTIONALLY LEFT BLANK

# 11. IMPLEMENTATION AND INTEGRATION STRATEGY

A crucial part of developing an ITS Architecture is establishing an approach to using it. A Regional ITS Architecture provides guidance for planning ITS projects within that region. It also provides information that can be used in the initial stages of project definition and development. This section of the report presents the approach for integrating the Gulf Region ITS Architecture into the transportation planning process and leveraging the ITS Architecture in project definition. In addition, opportunities and considerations for integrating ITS projects and systems at the regional and statewide levels, especially for systems providing traffic management, incident management, and traveler information functions, are discussed.

## 11.1 Using ITS Architecture in Planning and Project Definition

The Gulf Region ITS Architecture represents a detailed plan for the evolution of the ITS systems in the Gulf Region and can be used to support transportation planning efforts and ITS project development efforts at state and regional levels.

**Support Transportation Planning Process**

Once an ITS architecture has been created, it can be used as a key reference in the transportation planning process. This will ensure all proposed ITS projects are consistent with the ITS architecture and additional integration opportunities are considered, leading to more efficient implementations. The following sections describe three aspects of the transportation planning process.

***Long Range Transportation Plan***

One of the principal planning documents is the Gulf Coast Area Transportation Study (GCATS). The GCATS is a long-range transportation plan that provides a vision for transportation projects to be constructed out to the year 2030. The GCATS is a fiscally constrained, staged improvement program for the Gulf Coast. The Gulf Region goals and objectives are defined in Chapter 1 of this report. The GRPC is responsible for the development of the GCATS.

The Gulf Region ITS Architecture can serve as an input to the GCATS. The ITS Services and projects identified in the ITS architecture can support the development of long-range and short-

range strategies/actions during the regional transportation planning process that leads to an integrated, efficient inter-modal transportation system. The descriptions of the goals and attributes of the systems and services included in the Gulf Region ITS Architecture can support measurement assessment during the regional transportation planning process. The Project Sequencing from the Gulf Region ITS Architecture can assist the development of prioritized projects and address the consistency of proposed transportation investments in the financial plan. In addition, the Gulf Region ITS Architecture provides a framework for analyzing how ITS elements are related and identifying areas for potential coordination and cooperation among agencies. This can promote both systems and inter-jurisdictional integration during the transportation planning process.

The Gulf Region ITS Architecture can also serve as an input to the Statewide ITS Architecture which then serves as an input to Mississippi's Unified Long-Range Transportation Infrastructure Plan (MULTIPLAN). MULTIPLAN addresses the needs of the transportation system at local, regional, and state levels and how those needs can achieve economic development objectives, contribute to strived environmental stewardship ideals, and improve the quality of life for Mississippi citizens. The plan is reviewed approximately every five years to reflect changing situations. The Mississippi DOT is responsible for developing and maintaining the MULTIPLAN.

***ITS Strategic Plans***

MULTIPLAN incorporates the objectives of the Mississippi's ITS Strategic Plan into its overall framework. The ITS Strategic Plan is a consensus based approach that provides the framework for ITS planning and project development within the State of Mississippi. The plan is dynamic in nature and can be altered to reflect changes in policy considerations, state financial conditions, newly identified transportation needs, and new advances in technology. The ITS Strategic Plan also features a strategy for implementing projects in the short-term (0-5 years), medium-term (5-10 years), and long-term (beyond 10 years) and makes recommendations for taking appropriate steps for successful ITS development. The Gulf Region ITS Architecture can support what has been developed in the ITS Strategic Plan and assist in the prioritization of ITS projects scheduled for short-, medium-, and long-term implementation.

### *Other Planning Activities*

The Gulf Region ITS Architecture can also support other planning activities. The state's Comprehensive Emergency Transportation Response Plan (CETRP) identifies emergency policies, responsibilities, and procedures for the use of highways and highway facilities throughout the state. The plan is implemented under the following conditions: 1) upon the declaration of a national emergency by the President of the United States, 2) by concurrent resolution of the Congress, 3) by order of the Chief Executive of the State of Mississippi, or 4) in the absence of such specific direction and upon occurrence of a state or national emergency due to a natural, man-made or technological event.

## Support Programming and Budgeting

In addition to supporting the transportation planning process, the Gulf Region ITS architecture can assist in the development of the Transportation Improvement Program (TIP) and in the budgeting for planning projects.

### *Transportation Improvement Program*

The Transportation Improvement Program (TIP) is a primary transportation planning output that can be supported by the Gulf Region ITS Architecture. The TIP is developed and approved by the GRPC and is included, without modification, in the Statewide Transportation Improvement Program (STIP). Federal funding is made available through the Surface Transportation Program (STP) and is transferred to MDOT and allocated through the MPO for eligible transportation projects. The TIP is a three-year listing of projects within the region proposed for federal-aid funding under Title 23 (Federal Highway Funding) and Title 49 (Federal Transit Assistance) of the United States Code. The TIP is updated every 2-years and may be amended every 6-months. The TIP should be consistent with the GCATS long-range plan.

As part of the TIP preparation, a project prioritization and selection process is conducted, where the Gulf Region ITS Architecture can play a role. The Project Sequencing output from this ITS architecture can be an input to prioritization. Integration opportunities identified in the Gulf Region ITS Architecture can be used to better define the full benefits of ITS projects. In

addition, some of the project description information might be available from the outputs of the Gulf Region ITS Architecture, especially the Project Sequencing output.

In addition to the GCATS and TIP planning, the Gulf Region ITS Architecture can be considered to support other transportation planning activities or services associated with ITS projects or projects with ITS elements in the region.

***Capital Budgeting***

The Gulf Region ITS Architecture will define existing and planned ITS elements for stakeholders at all levels and how those elements interface with other existing or planned ITS elements in the region. The results of this process can be used by all stakeholders and organizations to define ITS projects and use that information in their budgeting process.

**Support ITS Project Development**

The Gulf Region ITS Architecture can be used for support in the ITS project development cycle. A typical ITS project development cycle begins with project definition, followed by Request for Proposal (RFP) generation, leading to project implementation. Information in the Gulf Region ITS Architecture can assist in all three of these areas of project development.

***Project Definition***

Project Definition may occur at several levels of detail. Early in the planning process a project may be defined only in terms of the transportation services it will provide, or by the major system pieces it contains. At some point prior to the beginning of implementation the details of the project must be developed. This could include further system definition and interface definition including exactly what systems or parts of systems will make up the project, what interconnections the project entails, or what information needs to flow across the system interconnections. Requirement definition may go through similar levels of detail, starting with very high-level description of project functions and moving toward system specifications. By identifying the portions of the Gulf Region ITS Architecture that define the project, the architecture outputs can be used to create aspects of the project definition.

The areas that an ITS architecture can assist in project definition are:

- The identification of agency roles and responsibilities (including any inter-agency cooperation) can come from the operational concept developed as part of the ITS architecture. This operational concept can either serve as a starting point for a more detailed definition, or possibly provide all of the needed information.
- Requirements definition can be completely or partly defined by using the ITS architecture functional requirements applicable to the project.
- The ITS architecture includes a map to ITS standards, and the project mapping to the Gulf Region ITS Architecture can extract the applicable ITS standards for the project.

***RFP Generation***

Once a project is defined, and funding is committed, the implementation process can commence with the generation of an RFP, which is the common governmental practice for initiating a contract with the private sector to implement the project. Once a contract is in place, project implementation begins and moves through design, development, integration, and testing.

The Gulf Region ITS Architecture, and the products produced during its development, can support this RFP generation. First, the project definition described above forms the basis for what is being procured. Mapping the project to the Gulf Region ITS Architecture allows bidders to have a clear understanding of the scope of the project and of the interfaces that need to be developed. The functional requirements created as part of the Gulf Region ITS Architecture can be used to describe the functional requirements for the project. In addition, a subset of the ITS Standards identified as part of the Gulf Region ITS Architecture development can be specified in the RFP.

***Project Implementation***

Because ITS projects involve systems and their interconnections, it is very important to follow a system engineering approach to designing and implementing the project. While the exact process followed is at the discretion of the local agency, the FHWA and FTA ITS Architecture and Standards Final Rule/Policy lay out a set of required systems engineering analyses for ITS

projects funded through the highway trust fund. The required systems engineering analysis steps are:

- Identification of portions of the ITS architecture being implemented;
- Identification of participating agencies' roles and responsibilities;
- Requirements definitions;
- Analysis of alternative system configurations and technology options to meet requirements;
- Procurement options;
- Identification of applicable ITS standards and testing procedures; and
- Procedures and resources necessary for operations and management of the system.

The ITS architecture can provide inputs to a number of these steps as shown in Table 11-1.

**Table 11-1. Systems Engineering Requirements Supported by ITS Architecture**

| Systems Engineering Requirements | ITS Architecture Output |
|---|---|
| Identification of portions of the ITS architecture being implemented | Mapping the project to the elements and interfaces of the ITS architecture. |
| Identification of participating agencies' roles and responsibilities | Using Operational Concept as a starting point. |
| Requirements definitions | Using Functional Requirements as a starting point. |
| Identification of applicable ITS standards and testing procedures | Using architecture standards outputs as a starting point for the standards definition. |

## 11.2 Integration Strategy

The overall objective of an ITS Architecture is to support the effective and efficient deployment of ITS projects that address the transportation problems and needs of the region. The ITS Architecture focuses on the integration of systems to gain the maximum benefit of each system's information and capabilities across the transportation network. The integration strategy provides the process connection between the ITS projects that are deployed within the region. The ITS Architecture defines "what" needs to be put in place to address the needs and requirements of the region. The transportation planning process can leverage the ITS Architecture as a roadmap to

project sequencing and interdependency to achieve an integrated transportation system that addresses those strategic objectives.

The most challenging issue in the integration of the ITS Architecture in the planning process is the fact that there is more than one planning process. Coordination is important between the Mississippi DOT, the GRPC and Planning and Development Districts throughout the region for ITS projects in their respective plans. Integration opportunities can be taken advantage of within the region as well as with other regions. This is the primary intent of the ITS Architecture compliance where federal funding is involved.

Another difficult issue to address is coordination of ITS project planning between the federally funded projects and non-federally funded projects. Generally, non-federally funded projects are not part of the Long Range Planning Process or the Transportation Improvement Program. The ITS Architecture can provide a bridge between federally and non-federally funded projects and systems. Coordinating all of these projects requires an understanding by all existing and potential ITS stakeholders within the entire region. The Gulf Region ITS Architecture provides a common reference point for all stakeholders to gain insight into the integration of various ITS systems.

THIS PAGE INTENTIONALLY LEFT BLANK

# 12. ARCHITECTURE MAINTENANCE PLAN

## 12.1 Introduction

The Gulf Region ITS Architecture has been created as a consensus view of stakeholders within the Gulf Region of ITS systems they have implemented and systems they plan to implement in the future. By its nature, the architecture is not a static set of outputs. The architecture should be modified as plans and priorities change, ITS projects are implemented, and the ITS needs and services evolve in the region. There are many actions that may cause a need to update the architecture, including:

- **Changes in Project Definition.** When actually defined, a project may add, subtract or modify elements, interfaces, or information flows of the Gulf Region ITS Architecture. Because the architecture is meant to describe not only planned ITS, but also current ITS implementations, it should be updated to correctly reflect the deployed projects.
- **Changes due to Project Addition/Deletion.** Occasionally a project will be added, deleted or modified during the planning process. When this occurs, the aspects of the Gulf Region ITS Architecture associated with the project should be added, deleted or modified.
- **Changes in Project Status.** As projects are deployed, the status of the architecture elements, services and flows that are part of the projects will have to be changed from planned to existing. Elements, services and flows should be considered to exist when they are substantially complete.
- **Changes in Project Priority.** Due to funding constraints, technological changes or other considerations, a planned project may be delayed or accelerated. Such changes should be reflected in the Gulf Region ITS Architecture.
- **Changes in Regional/Local Needs.** Transportation planning is done to address both regional and local transportation needs. Over time these needs change and the corresponding aspects of the ITS architecture that addresses these needs may need to be updated.
- **Changes in Participating Stakeholders.** Stakeholder involvement can also change over time. The Gulf Region ITS Architecture should be updated to reflect the participating

stakeholder roles in the statewide view of ITS elements, interfaces, and information flows.

- **Changes in Other Architectures.** The Gulf Region ITS Architecture includes not only elements and interfaces within the MPO's own region, but also interfaces to elements in adjoining regions or states. Changes in the ITS Architecture in adjoining regions or states may necessitate changes in the Gulf Region ITS Architecture to maintain consistency. The Gulf Region ITS Architecture may also overlap with the Statewide ITS Architecture and a change in one architecture may necessitate a change in the other.
- **Changes in National ITS Architecture.** The National ITS Architecture may be expanded and evolved from time to time to include new user services or refine existing services. These changes should be considered as the ITS architecture is updated.

The Gulf Region ITS Architecture will be maintained in accordance with the provisions contained in the Code of Federal Regulation, 23 CFR 940.9(f). The following sections define the key aspects of the process for the maintenance of the Gulf Region ITS Architecture:

- Who is responsible for architecture maintenance?
- What will be maintained?
- How will it be maintained (i.e. what configuration control process will be used?)?

## 12.2 Who Is Responsible for Architecture Maintenance

Responsibility for maintaining the Gulf Region ITS Architecture will lie with the Gulf Region Planning Commission (GRPC). The GRPC will create a core group that reviews proposed changes to the architecture. This group may be called the Gulf Region ITS Architecture Maintenance Committee. The committee may be composed of the following: GRPC Director, MDOT District 6 Engineer, MDOT District 6 Planning Engineer, MDOT District 6 ITS Manager, MHP District 8 representative, County Emergency Management Directors, and a representative for each city and county in the Gulf Coast region. The Architecture Maintenance Committee will be responsible for reviewing proposed changes. An opportunity should be given to the Architecture Maintenance Committee to review all proposed changes before any changes are accepted and the architecture is updated. It is proposed that the Architecture Maintenance

Committee meet on an annual basis, or more frequently as necessary, to review any proposed changes to the architecture.

The Chair of the Committee should serve as the Maintenance Manager responsible for overseeing and guiding the maintenance effort. The Maintenance Manager should coordinate the activities of the architecture maintenance, including calling the meetings, making arrangements, assembling an agenda, leading the meetings, and approving minutes.

## 12.3 What Will Be Maintained

There are several different components that make up the Gulf Region ITS Architecture. Some may require more frequent updates than others, but the entire architecture will need periodic review to ensure that it is consistent with regional and statewide goals. This version of the Gulf Region ITS Architecture shall be the baseline architecture upon which future revisions are conducted as necessary. The maintenance timeframe identified in this document will become effective upon completion of this Gulf Region ITS Architecture.

The Gulf Region ITS Architecture was established using Turbo Architecture Software Version 3.1 and stored in an electronic Turbo Architecture database. The architecture is represented through a set of outputs including various reports and diagrams. Collectively these outputs can be used to develop a general ITS architecture document. The architecture will be maintained through updates in the electronic database using Turbo Architecture.

The following may be reviewed and updated at regular intervals:

- Description of the region;
- Participating agencies and other stakeholders, including key contact information;
- Inventory of existing and planned ITS systems in the region;
- Operational concept that identifies the roles and responsibilities of participating agencies and stakeholders in the operation and implementation of the systems;
- Agreements for operations and interoperability;
- System functional requirements;

- Interface requirements and information exchanges with planned and existing systems and subsystems;
- Applicable ITS standards supporting regional and national interoperability;
- Sequence of projects for implementation.

Outputs such as interconnect and architecture flow diagrams, inventory lists, stakeholders lists and other diagrams and reports can be produced from the Turbo Architecture software, so they are by-products of the architecture database. These outputs can be updated as necessary for meetings or outreach activities.

To aid the architecture version document control, it is recommended that the filename of the database should contain the version number and/or date on which the architecture was updated. Also the version number and date should be included in the Turbo Architecture database.

## 12.4 Configuration Control

Once the architecture baseline is defined, the process for making changes to this baseline must be established. The configuration control (change management) process specifies how changes are identified, how often changes are be made, and how the changes will be reviewed, implemented, and released.

**How Changes are Identified**

Changes to the Gulf Region ITS Architecture may be identified by two channels. One is that Mississippi DOT or the GRPC proposes changes to the architecture according to the ITS projects or projects with ITS components within the region. Another channel is that any stakeholders identified as a participant in the Gulf Region ITS Architecture may propose potential changes. If the proposed change is to add a new stakeholder and the stakeholder's ITS elements and interfaces, that agency should submit the change request. All change requests should be sent to the Maintenance Manager.

Stakeholders should use the Change Request Form to propose changes. A Change Request form is shown on page 129. The changes to the architecture, the reasons for the proposed

modifications and the stakeholder contact should be clearly defined in the request. Upon receiving a Change Request form, the Maintenance Manager will perform an initial assessment of the proposed change for the impact to the Gulf Region ITS Architecture and/or the affected document. If the proposed change has an impact on other stakeholders, the Maintenance Manager should contact the stakeholders to confirm their agreement with the proposed modification.

**How Often Changes are Made**

A comprehensive, formal update of the Gulf Region ITS Architecture Baseline should be performed annually. This maintenance schedule will ensure that the architecture continues to accurately represent statewide and regional goals. Minor, informal modifications may be made at the discretion of the Maintenance Manager, given the modifications are approved by the Architecture Maintenance Committee.

**Change Review, Implementation, and Release**

The general steps in the process of change review, implementation and release are:

1. Stakeholders define and propose changes per the recommendations given above.
2. The Maintenance Manager, as necessary in coordination with the stakeholders affected by the proposed changes, evaluates the changes and determines what impact they may have on the architecture and/or associated documentation.
3. The Architecture Maintenance Committee reviews the proposed changes and offers comments.
4. Upon its review, the Architecture Maintenance Committee makes decisions to accept the change, reject it, or ask for additional information.
5. The Maintenance Manager implements the decisions. If the decision is to accept the change, then the appropriate portions of the architecture baseline are updated (per the schedule discussed above) and an updated architecture baseline is defined.
6. Once the Gulf Region ITS Architecture has been modified, the stakeholders should be notified by the Maintenance Manager of architecture updates and informed how to obtain the latest version of the architecture.

The time required to perform this configuration control process will be a direct function of the number of changes suggested to the architecture, which will be driven by how much the architecture is being used. It is suggested that this process be reviewed periodically and fine-tuned to most appropriately address the level of change that has occurred.

## Mississippi Statewide ITS Architecture Change Request Form

| | | |
|---|---|---|
| **Originator Name:** | | **Date Submitted:** |
| **Originator Agency:** | | |
| **Originator Telephone:** | **Originator Fax:** | **Originator E-Mail:** |
| **Agency Authorized Signature:** | | **Signature Date:** |

| | | |
|---|---|---|
| **Description of Proposed Change:** | | |
| | | |
| | | |
| | | |
| | | |
| **Rationale for Proposed Change:** | | |
| | | |
| **Impacted Agency:** | **Authorized Signature:** | **Signature Date:** |
| **Impacted Agency:** | **Authorized Signature:** | **Signature Date:** |
| **Impacted Agency:** | **Authorized Signature:** | **Signature Date:** |
| **List of Attachments:** | | |
| **Baseline Document(s) Impacted:**<br>☐ **Turbo Architecture** ☐ **Architecture Report** ☐ **Other (describe)** | | |

| **To Be Completed By Maintenance Manager** | | |
|---|---|---|
| **Change Request No.:** | **Date Received:** | **Date Logged:** |
| **Date Initially Discussed:** | **Disposition:**<br>☐ **Accepted** ☐ **Rejected**<br>☐ **More Info** | **Comments:** |
| **Data Discussed:** | **Disposition:**<br>☐ **Accepted** ☐ **Rejected**<br>☐ **More Info** | **Comments:** |
| **Data Discussed:** | **Disposition:**<br>☐ **Accepted** ☐ **Rejected**<br>☐ **More Info** | **Comments:** |
| **Date of Committee Approval (If Applicable):** | | |
| **Baseline Documents Impacted/Version Implemented:**<br>☐ **Turbo Architecture** **Date:** _____ **Version:** _____<br>☐ **Architecture Report** **Date:** _____ **Version:** _____<br>☐ _____ **Date:** _____ **Version:** _____ | | |

THIS PAGE INTENTIONALLY LEFT BLANK

# Appendix A: Stakeholder Survey Questionnaire

**Before completing this survey, please provide the following information:**

Name: _____

Title: _____

Agency: _____

Division: _____

Phone: _____

Fax: _____

E-mail: _____

## QUESTIONNAIRE

The questionnaire is organized by the following sections:

General Questions
User Needs and Services
Data Management and Archiving
Roadway Operations – including freeway and arterial management and operations
Roadway Maintenance – including general roadway maintenance, winter maintenance, and work zone activities
Transportation Security
Incident & Emergency Management
Transit Operations
Commercial Vehicle Operations

**Instructions**

You are not required to fill out the entire survey questionnaire. To save your time, a matrix shown below is developed to instruct which sections of the questionnaire you should complete. Please fill out the sections of the questionnaire that are applicable to you. You are certainly welcome to fill out other sections and provide additional information. Feel free to skip any questions that you do not consider relevant to your agency.

| **Type of Agency** | **Section** | | | | | | | | |
|---|---|---|---|---|---|---|---|---|---|
| | **A** | **B** | **C** | **D** | **E** | **F** | **G** | **H** | **I** |
| Transportation Operations and Maintenance Agency (District Office, Project Office, Maintenance Office, Traffic and Safety Office, Public Works Department, Engineers Office, etc.) | X | X | X | X | X | X | | | |
| Roadway Service Patrol | X | X | X | | | X | X | | |
| DOT Office of Enforcement, Law Enforcement and Emergency Management Agency (Sheriff Department, Police Department, Fire Department, Emergency Management Agency, Emergency Medical Services, etc.) | X | X | X | | | X | X | | X |
| Planning | X | X | X | X | X | X | X | X | X |
| Public Transportation Agency | X | X | X | | | | | X | |
| Data Archives/Data Management Agency | X | X | X | | | | | | |
| Others | X | X | X | | | | | | |

## A. General Questions

1. Is your agency planning any ITS projects, including but not limited to traffic management centers, dispatch centers, transit vehicles, communications infrastructure, etc.

   ☐ YES ☐ NO

   If YES, please describe the project(s) and/or provide project name(s) and available documentation source(s).

   _____

   _____

   _____

   _____

   _____

   _____

2. Does your agency exchange voice or data information (including by telephone or fax) with any of the following types of organizations/agencies? Please select all that apply and list the appropriate organizations/agencies by name.

☐ Incident/Emergency_____

_____

_____

☐ Freeway_____

_____

_____

☐ Arterial or Non-Freeway _____

_____

_____

☐ Maintenance and Construction_____

_____

_____

☐ Public Transportation_____

_____

_____

☐ Commercial Vehicle Operations/Inspection_____

_____

_____

3. What specific types of information do you share with these organizations/agencies?

Incident/Emergency_____

_____

_____

_____

Freeway_____

_____

_____

_____

Arterial or Non-Freeway _____

_____

_____

_____

Maintenance and Construction_____

_____

_____

_____

Public Transportation_____

_____

_____

_____

Commercial Vehicle Operations/Inspection_____

_____

_____

_____

4. Please indicate what communications technologies are available within your agency that might be used to exchange information with other agencies?

- Center-to-Center Communications ☐ EXISTING ☐ PLANNED
- Internet System Access and Browsing ☐ EXISTING ☐ PLANNED
- Agency Radio Network ☐ EXISTING ☐ PLANNED
- Telephone ☐ EXISTING ☐ PLANNED
- Fax ☐ EXISTING ☐ PLANNED
- Pager ☐ EXISTING ☐ PLANNED
- E-mail ☐ EXISTING ☐ PLANNED
- Scheduled Mailings ☐ EXISTING ☐ PLANNED
- Other_____

5. What existing communicating infrastructure (for transportation or other uses) is controlled/owned by your organization or agency?

- Radio ☐ EXISTING ☐ PLANNED
- Cobber Cable ☐ EXISTING ☐ PLANNED
- Fiber Cable ☐ EXISTING ☐ PLANNED
- Wireless ☐ EXISTING ☐ PLANNED
- Other_____

6. Does your agency disseminate (or plan to disseminate) traffic or weather condition information to the public in any of the following ways?

- Dynamic Message Signs (DMS) (permanent or portable) ☐ EXISTING ☐ PLANNED
- Highway Advisory Radio (HAR) ☐ EXISTING ☐ PLANNED
- In-Vehicle Navigation Systems ☐ EXISTING ☐ PLANNED
- TV/Radio ☐ EXISTING ☐ PLANNED
- Internet ☐ EXISTING ☐ PLANNED
- Kiosks ☐ EXISTING ☐ PLANNED
- E-mail ☐ EXISTING ☐ PLANNED
- 511 or Other Telephone Services ☐ EXISTING ☐ PLANNED
- Pager or Personal Data Assistants (PDAs) ☐ EXISTING ☐ PLANNED
- DMS controlling parking access ☐ EXISTING ☐ PLANNED

- Other_____

7. Does your agency receive (or plan to receive) information from the National Weather Service?

   ☐ EXISTING ☐ PLANNED ☐ NO

8. Does your agency receive (or plan to receive) surface transportation specific weather information from a value-added sector specific meteorological service provider?

   ☐ EXISTING ☐ PLANNED ☐ NO

9. Does your agency have (or plan to have) the capability to provide any of the following information?

   a. Broadcast of Static or Real-Time Traffic, Transit, or Maintenance and Construction Information? ☐ EXISTING ☐ PLANNED ☐ NO
   b. Personalized provision of Traffic, Transit, or Maintenance and Construction Information to users? ☐ EXISTING ☐ PLANNED ☐ NO
   c. Route Guidance (either pre-trip or enroute)? ☐ EXISTING ☐ PLANNED ☐ NO
   d. Yellow Pages Information or Reservation? ☐ EXISTING ☐ PLANNED ☐ NO

10. Please list any current agreements or memoranda of understanding that your agency has in place with any other organizations/agencies (e.g., maintenance of traffic signals, media agreements).

    _____
    _____
    _____
    _____
    _____

**Additional Information / Comments**

_____
_____
_____

## B. User Needs and Services

1. What are the major transportation problems and issues in your jurisdictional area?

_____

_____

_____

_____

_____

_____

2. Please identify and rank the top 10 user needs and services (across all service areas) for mitigating critical transportation problems and issues in your jurisdiction. Use the numbers from 1 to 10 with 1 being the most critical user needs and services.

***Travel and Traffic Management***

___ Pre-trip Travel Information
___ En-route Driver Information
___ Route Guidance
___ Ride Matching and Reservation
___ Traveler Services Information
___ Traffic Control
___ Incident Management
___ Travel Demand Management
___ Emissions Testing and Mitigation
___ Highway Rail Intersection

***Public Transportation Management***

___ Public Transportation Management
___ En-route Transit Information
___ Personalized Public Transit
___ Public Travel Security

***Electronic Payment***

___ Electronic Payment Services

***Commercial Vehicle Operations***

___ Commercial Vehicle Electronic Clearance
___ Automated Roadside Safety Inspection
___ On-board Safety and Security Monitoring
___ Commercial Vehicle Administrative Processes
___ Hazardous Materials Security and Incident Response
___ Freight Mobility

***Emergency Management***

___ Emergency Notification and Personal Security
___ Emergency Vehicle Management
___ Disaster Response and Evacuation

***Advanced Vehicle Safety Systems***

___ Longitudinal Collision Avoidance
___ Lateral Collision Avoidance
___ Intersection Collision Avoidance
___ Vision Enhancement for Crash Avoidance
___ Safety Readiness
___ Pre-crash Restraint Deployment
___ Automated Vehicle Operation

***Information Management***

___ Archived Data

***Maintenance and Construction Management***

___ Maintenance and Construction Operations

3. Based on your understanding of ITS technology in transportation, what opportunities do you see in the future for the application of ITS technologies in your area? (Please check all applied)

☐ CCTV Surveillance

☐ Integrated Statewide Emergency Response

☐ Coordinated Signal Systems

☐ Integrated Regional Incident Management

☐ Advanced Highway/Rail Grade Crossing Control

☐ Variable/Dynamic Message Signs

☐ Pre-planned Detour/Evacuation Routes

☐ Highway Advisory Radio (HAR)

☐ Transit/Parking Smart Card Payment System

☐ Traffic Signal Priority for transit vehicles

☐ Traffic Signal Priority for emergency vehicles

☐ Internet Traveler Information Website

☐ Telephone Traveler Information

☐ Aerial Detection

☐ Road Weather Systems

☐ Advanced Work Zone Management

☐ AVL/In-vehicle Navigation System for Emergency or Maintenance Vehicles

☐ Transit Location/ Information System

☐ Cell number for incident detection (e.g. *999)

☐ Cable TV Traveler Information

☐ Highway Service Patrol

☐ Hazardous Materials Response

Others:

_____

_____

**Additional Information / Comments**

_____

_____

_____

_____

**A. Data Management and Archiving**

1. Does your agency collect and store (or plan to collect and store) data (data archiving)?

   ☐ **YES** ☐ **NO**

   If YES, please select all that apply and list the appropriate data types (traffic volume, speed, incident, condition assessment, video, ridership, etc.), data sources (organizations/agencies, systems, equipment, etc.) and data formats (electronic database, paper files, etc.)

   - Traffic Data ☐ EXISTING ☐ PLANNED

   Data Types: _____

   Data Sources: _____

   Data Formats: _____

   - Emergency/Accident Data ☐ EXISTING ☐ PLANNED

   Data Types: _____

   Data Sources: _____

   Data Formats: _____

   - Maintenance and Construction Data ☐ EXISTING ☐ PLANNED

   Data Types: _____

   Data Sources: _____

   Data Formats: _____

- Public Transportation Data ☐ EXISTING ☐ PLANNED

Data Types: _____

Data Sources: _____

Data Formats: _____

- Commercial Vehicle Data ☐ EXISTING ☐ PLANNED

Data Types: _____ _____

Data Sources: _____

Data Formats: _____

- Emission Data ☐ EXISTING ☐ PLANNED

Data Types: _____ _____

Data Sources: _____

Data Formats: _____

- Parking Data ☐ EXISTING ☐ PLANNED

Data Types: _____

Data Sources: _____

Data Formats: _____

- Other_____

_____

_____

_____

2. Does your archived data management system provide general query and report functionality?

☐ EXISTING ☐ PLANNED ☐ NO

3. Does your archived data management system provide advanced features such as data analysis, summarization, and data mining to facilitate discovery of information, patterns, and correlations in large data sets?

☐ EXISTING ☐ PLANNED ☐ NO

4. Does your organization or agency use Geographic Information Systems (GIS)?

☐ EXISTING ☐ PLANNED ☐ NO

If EXISTING or PLANNED, what types of information are GIS used for?

_____

_____

_____

**Additional Information / Comments**

_____

_____

_____

_____

_____

_____

**B. Roadway Operations**

1. Does your agency use (or plan to use) any of the following real-time traffic data collection technologies?

   - Loop Detectors that provide volume and speed data at midblock locations (this **excludes** actuators on intersection approaches)
     ☐ EXISTING ☐ PLANNED
   - CCTV Cameras ☐ EXISTING ☐ PLANNED
   - Vehicle Probe Readers to estimate travel times on arterials
     ☐ EXISTING ☐ PLANNED
   - Road Weather Information System ☐ EXISTING ☐ PLANNED
   - Overheight Vehicle Detection ☐ EXISTING ☐ PLANNED
   - Other_____

     _____

     _____

     _____

2. Does your agency detect and verify (or plan to detect and verify) traffic incidents using sensors and surveillance equipment?

   ☐ EXISTING ☐ PLANNED ☐ NO

3. Does your agency operate (or plan to add) lane control devices (e.g., changeable overhead directional arrows)?

☐ EXISTING ☐ PLANNED ☐ NO

4. Does your agency manage (or plan to manage) automatic or remotely controlled gates or barriers that control access to roadway segments including ramps and traffic lanes?

☐ EXISTING ☐ PLANNED ☐ NO

5. Does your agency operate (or plan to add) ramp meters on freeway entrances?

☐ YES ☐ NO

If YES, please indicate what is (or will be) used:

- Pre-emption for emergency vehicles ☐ EXISTING ☐ PLANNED
- Priority for transit vehicles ☐ EXISTING ☐ PLANNED

6. Does your agency control (or plan to control) any signalized intersections?

☐ YES ☐ NO

**If NO, skip to Section E.**
If YES, do any of your signalized intersections have (or plan to have):

- Closed Loop or Centralized Control ☐ EXISTING ☐ PLANNED
- Real-Time traffic adaptive control such as SCOOT/SCATS or similar ☐ EXISTING ☐ PLANNED
- Signal Preemption for emergency vehicles ☐ EXISTING ☐ PLANNED
- Signal Priority for Transit Vehicles ☐ EXISTING ☐ PLANNED
- Wireless Communications ☐ EXISTING ☐ PLANNED
- Other_____

_____

7. Does your agency have (or plan to have) any signalized intersections that are interconnected with active railroad crossing devices?

☐ EXISTING ☐ PLANNED ☐ NO

8. Does your agency monitor highway-rail intersections with any of the following technologies?

- Vehicle Detectors ☐ EXISTING ☐ PLANNED
- Video Surveillance/Detection ☐ EXISTING ☐ PLANNED
- Train Arrival Prediction (Predict Train Arrival Electronically) ☐ EXISTING ☐ PLANNED
- Electronic Traffic Violator Devices ☐ EXISTING ☐ PLANNED
- Other_____

_____

**Additional Information / Comments**

_____

_____

_____

**C. Roadway Maintenance**

1. Does your agency provide or support (or plan to provide or support) on-going operations and maintenance activities?

   ☐ EXISTING ☐ PLANNED ☐ NO

2. Does your agency have (or plan to have) a maintenance and construction vehicle fleet?

   ☐ EXISTING ☐ PLANNED ☐ NO

   **If NO, skip to question #7.**

3. Does your agency operate or maintain (or plan to operate or maintain) a dispatch facility?

   ☐ EXISTING ☐ PLANNED ☐ NO

   If EXISTING or PLANNED, how do your dispatchers communicate with the vehicle operators?

   _____

   _____

   _____

4. Does your agency use (or plan to use) an Automated Vehicle Location (AVL) system?

☐ EXISTING ☐ PLANNED ☐ NO

5. Does your agency provide (or plan to provide) maintenance of the vehicles in your fleet?

☐ EXISTING ☐ PLANNED ☐ NO

6. Does your agency have (or plan to have) the capability to automate vehicle maintenance scheduling and manage both routine and corrective maintenance activities on vehicles?

☐ EXISTING ☐ PLANNED ☐ NO

7. Does your agency collect (or plan to collect) road and weather conditions data from environmental sensors located on or near the roadway?

☐ EXISTING ☐ PLANNED ☐ NO

8. Does your agency use (or plan to use) environmental data or information to detect environmental hazards such as icy road conditions, high winds, or dense fog?

☐ EXISTING ☐ PLANNED ☐ NO

9. Does your agency have (or plan to have) any roadway deicing systems?

☐ EXISTING ☐ PLANNED ☐ NO

10. Does your agency provide (or plan to provide) maintenance services such as landscape maintenance, hazard removal (roadway debris, dead animals), routine maintenance activities (roadway cleaning, grass cutting), or repair and maintenance of equipment (both ITS and non-ITS) on the roadway?

☐ EXISTING ☐ PLANNED ☐ NO

11. Does your agency perform (or plan to perform) winter maintenance activities?

☐ EXISTING ☐ PLANNED ☐ NO

12. Does your agency manage roadway work zone activities?

☐ YES ☐ NO

If YES, please identify below the devices or systems currently deployed or planned for work zone monitoring.

- Dynamic Message Signs (DMS) ☐ EXISTING ☐ PLANNED
- Closed Circuit Television (CCTV) ☐ EXISTING ☐ PLANNED
- Vehicle Speed Monitoring using Remote Devices (i.e. Sensors/Detectors) ☐ EXISTING ☐ PLANNED
- Work Zone Intrusions (Detection system on/near the roadway or on-board of maintenance vehicles) ☐ EXISTING ☐ PLANNED
- Other _____

**Additional Information / Comments**

_____

_____

_____

_____

_____

_____

_____

**D. Transportation Security**

1. Does your agency monitor (or plan to monitor) the transportation infrastructure (e.g., bridges, tunnels, and management centers) for potential threats <u>using sensors and surveillance equipment</u>?

   ☐ EXISTING ☐ PLANNED ☐ NO

2. Does your agency <u>remotely control</u> (or plan to remotely control) barrier and safeguard systems to preclude an incident, control access during and after an incident or mitigate the impact of an incident?

   ☐ EXISTING ☐ PLANNED ☐ NO

3. Does your agency monitor (or plan to monitor) public travel-related areas such as transit stations, transit stops, rest stops, and kiosk locations for potential threats using <u>sensors and surveillance equipment</u>?

   ☐ EXISTING ☐ PLANNED ☐ NO

4. Does your agency use (or plan to use) ITS devices and traveler information systems (such as dynamic message signs, highway advisory radio, 511 or other telephone services, TV/radios, Internet, e-mail, and kiosks) to alert the public in emergency situations such as child abductions, severe weather events, civil emergencies, and other situations that pose a threat to life and property?

   ☐ EXISTING ☐ PLANNED ☐ NO

5. Does your agency use (or plan to use) sensors and surveillance equipment to monitor and detect potential, looming, and actual disasters including natural disasters and technological and man-made disasters (hazardous materials incidents, nuclear, chemical, biological, and radiological attacks) and notify all responding agencies of detected emergencies?

   ☐ EXISTING ☐ PLANNED ☐ NO

6. Does your agency support (or plan to support) disaster response and recovery, including coordination of emergency response plans and resources, damage assessment, service restoration, and transition back to normal operation?

   ☐ EXISTING ☐ PLANNED ☐ NO

7. Does your agency support (or plan to support) evacuation of the general public from a disaster area and manage subsequent reentry to the disaster area using transportation resources?

   ☐ EXISTING ☐ PLANNED ☐ NO

8. Does your agency provide (or plan to provide) disaster-related traveler information to the general public, regarding evacuation and reentry information and other information concerning the operation and availability of the transportation system during a disaster?

   ☐ EXISTING ☐ PLANNED ☐ NO

**Additional Information / Comments**

_____

_____

_____

_____

_____

**E. Incident/Emergency Management**

1. Does your agency currently perform (or plan to perform) Computer Aided Dispatch (CAD) of emergency vehicles?

   ☐ EXISTING ☐ PLANNED ☐ NO

2. Does your agency use (or plan to use) an Automated Vehicle Location (AVL) system?

   ☐ EXISTING ☐ PLANNED ☐ NO

3. Does your agency receive (or plan to receive) incident data from an arterial, freeway, transit, or other emergency management agencies?

| | | | |
|---|---|---|---|
| Arterial Management: | ☐ EXISTING | ☐ PLANNED | ☐ NO |
| Freeway Management: | ☐ EXISTING | ☐ PLANNED | ☐ NO |
| Maintenance and Construction: | ☐ EXISTING | ☐ PLANNED | ☐ NO |
| Transit Agency(ies): | ☐ EXISTING | ☐ PLANNED | ☐ NO |
| Other Emergency Management: | ☐ EXISTING | ☐ PLANNED | ☐ NO |

   Other _____

4. Does your agency send (or plan to send) incident data to an arterial, freeway, transit, or other emergency management agencies?

| | | | |
|---|---|---|---|
| Arterial Management: | ☐ EXISTING | ☐ PLANNED | ☐ NO |
| Freeway Management: | ☐ EXISTING | ☐ PLANNED | ☐ NO |
| Maintenance and Construction: | ☐ EXISTING | ☐ PLANNED | ☐ NO |
| Transit Agency(ies): | ☐ EXISTING | ☐ PLANNED | ☐ NO |
| Other Emergency Management: | ☐ EXISTING | ☐ PLANNED | ☐ NO |

   Other _____

5. Does your agency have (or plan to have) preemption lights for signalized intersections or ramp meters?

   ☐ EXISTING ☐ PLANNED ☐ NO

6. Does your agency receive (or plan to receive) real-time traffic information and conditions from transportation agencies to support and enhance emergency vehicle routing?

   ☐ EXISTING ☐ PLANNED ☐ NO

If EXISTING or PLANNED, from which agency(ies):

_____

_____

_____

_____

_____

**Additional Information / Comments**

_____

_____

_____

_____

_____

**F. Transit Operations**

1. What types of transit services does your agency operate (or plan to operate)?

- Fixed Route ☐ EXISTING ☐ PLANNED
- Demand Responsive (Paratransit) ☐ EXISTING ☐ PLANNED
- Rail ☐ EXISTING ☐ PLANNED
- Ferries ☐ EXISTING ☐ PLANNED
- Other _____

2. Does your agency provide (or plan to provide) maintenance of the transit vehicles?

☐ EXISTING ☐ PLANNED ☐ NO

3. Does your agency have (or plan to have) the capability to automate vehicle maintenance scheduling and manage both routine and corrective maintenance activities on vehicles?

☐ EXISTING ☐ PLANNED ☐ NO

4. Does your agency use (or plan to use) an Automated Vehicle Location (AVL) system?

☐ EXISTING ☐ PLANNED ☐ NO

5. Does your agency have (or plan to have) security monitoring systems on-board transit vehicles?

☐ EXISTING ☐ PLANNED ☐ NO

6. Does your agency monitor (or plan to monitor) public areas (e.g. stops, park & ride lots, stations) using sensors and surveillance equipment?

☐ EXISTING ☐ PLANNED ☐ NO

7. Does your agency use sensors and surveillance equipment to perform security monitoring (or plan to monitor) non-public areas (e.g. transit yards or other infrastructure)?

☐ EXISTING ☐ PLANNED ☐ NO

8. Does your agency directly or indirectly (i.e. thru another agency) provide (or plan to provide) transit information to the public?

☐ YES ☐ NO

If YES, please identify below the method(s) currently used or planned to provide transit information:

- Internet Web Page ☐ EXISTING ☐ PLANNED
- Pagers or Personal Data Assistants ☐ EXISTING ☐ PLANNED
- Kiosks ☐ EXISTING ☐ PLANNED
- Display/Audio in Transit Vehicles ☐ EXISTING ☐ PLANNED
- E-mail or other direct PC communications ☐ EXISTING ☐ PLANNED
- Electronic Displays/Audio Announcements at Transit Stops and Stations (includes video monitors) ☐ EXISTING ☐ PLANNED
- TV (interactive or dedicated Cable) ☐ EXISTING ☐ PLANNED
- Other _____

9. Does your agency provide (or plan to provide) real-time transit information (i.e., latest available information on transit routes, schedules, transfer options, bicycle accessibility, fares, real-time schedule adherence, etc.) at stops or parking facilities?

☐ EXISTING ☐ PLANNED ☐ NO

10. Does your agency provide transit trip planning?

☐ YES ☐ NO

If YES, please identify below the method(s) currently used or planned for provide the trip planning information:

- Internet ☐ EXISTING ☐ PLANNED
- E-mail or other direct PC communications ☐ EXISTING ☐ PLANNED
- Kiosks ☐ EXISTING ☐ PLANNED
- Other _____

11. Does your agency have (or plan to have) an Electronic Fare Payment System (smart card, swipe card, credit card, etc.)?

☐ EXISTING ☐ PLANNED ☐ NO

12. Does your transit vehicles have (or plan to have) the capability to receive priority lights at signalized intersections?

☐ EXISTING ☐ PLANNED ☐ NO

**Additional Information / Comments**

_____

_____

_____

_____

_____

**G. Commercial Vehicle Operations**

1. Does your agency perform (or plan to perform) electronic credential administrative services for commercial vehicles?

☐ EXISTING ☐ PLANNED ☐ NO

2. Does your agency participate (or plan to participate) in roadside commercial vehicle inspection?

☐ EXISTING ☐ PLANNED ☐ NO

**If NO, no further responses are required in this section.**

3. Does your agency perform (or plan to perform) electronic screening?

☐ EXISTING ☐ PLANNED ☐ NO

4. Does your agency exchange (or plan to exchange) safety and/or security information?

☐ EXISTING ☐ PLANNED ☐ NO

5. Does your agency perform (or plan to perform) a high speed weigh-in-motion service?

☐ EXISTING ☐ PLANNED ☐ NO

6. Does your agency participate (or plan to participate) in HAZMAT detection?

☐ EXISTING ☐ PLANNED ☐ NO

If EXISTING or PLANNED, please list any handheld or roadside equipment for detection and classification of security sensitive HAZMAT on commercial vehicles, and for accessing credentials information on driver verification.

_____

_____

**Additional Information / Comments**

_____

_____

_____

**<u>Please complete and return this questionnaire by September 22nd to:</u>**

Valerie Holmes
URS Corporation
11 Brendan Way, Suite 140
Greenville, SC 29615-6308
Voice: (864) 527-4732
Fax: (864) 609-9069
Valerie_Holmes@urscorp.com

Thank You!

# Appendix B: Functional Requirements

| Architecture | | | Status |
|---|---|---|---|
| **Gulf Region ITS Architecture** | | | |
| *Element:* **Biloxi and Gulfport Multimodal Transit Centers** | | | |
| *Entity:* **Information Service Provider** | | | |
| *Functional Area:* | **ISP Traveler Data Collection**<br>Collects traveler information from other centers, consolidates and refines the collected data, and makes this data available to traveler information applications. | | |
| *Requirement:* | 1 | The center shall collect, process, and store traffic and highway condition information, including incident information, detours and road closures, event information, recommended routes, and current speeds on specific routes. | Planned |
| *Requirement:* | 3 | The center shall collect, process, and store transit routes and schedules, transit transfer options, transit fares, and real-time schedule adherence information. | Planned |
| *Requirement:* | 4 | The center shall collect, process, and store parking information, including location, availability, and fees. | Planned |
| *Requirement:* | 6 | The center shall collect, process, and store weather information. | Planned |
| *Requirement:* | 7 | The center shall collect, process, and store event information. | Planned |
| *Functional Area:* | **Infrastructure Provided Trip Planning**<br>Generation of pre-trip and enroute trip plans for travelers (and vehicles) based on current traffic conditions, work zones, weather, and travelers constraints and preferences. Includes end-to-end trips using multiple modes, such as bicycle, transit, etc. | | |
| *Requirement:* | 1 | The center shall provide the capability to provide specific pre-trip and enroute directions to travelers (and drivers), including costs, arrival times, and transfer points. | Planned |
| *Requirement:* | 3 | The center shall support on-line route guidance for travelers using personal devices (such as PDAs). | Planned |
| *Requirement:* | 7 | The center shall generate route plans based on transit services, including fares, schedules, and requirements for travelers with special needs. | Planned |
| *Requirement:* | 9 | The center shall generate route plans based on current or forecasted weather. | Planned |
| *Requirement:* | 10 | The center shall generate route plans based on ferry, rail, air, or other multimodal transportation data. | Planned |
| *Requirement:* | 11 | The center shall exchange route segment information with other centers outside the area served by the local center. | Planned |
| *Requirement:* | 12 | The center shall generate trips based on the use of more than one mode of transport. | Planned |
| *Requirement:* | 13 | The center shall use the preferences and constraints specified by the traveler in the trip request to select the most appropriate mode of transport. | Planned |
| *Requirement:* | 14 | The center shall provide the capability for the traveler to confirm the proposed trip plan. | Planned |

| Architecture | | Status |
|---|---|---|
| **Gulf Region ITS Architecture** | | |
| *Element:* **Biloxi and Gulfport Multimodal Transit Centers** | | |
| *Entity:* **Information Service Provider** | | |
| *Functional Area:* **Infrastructure Provided Trip Planning** Generation of pre-trip and enroute trip plans for travelers (and vehicles) based on current traffic conditions, work zones, weather, and travelers constraints and preferences. Includes end-to-end trips using multiple modes, such as bicycle, transit, etc. | | |
| *Requirement:* | 16 The center shall support an interface with a map update provider, or other appropriate data sources, through which updates of digitized map data can be obtained and used to determine vehicle and non-vehicle routes, trip planning, and on-line vehicle guidance. | Planned |
| *Requirement:* | 17 The center shall provide the capability for center personnel to control route calculation parameters. | Planned |
| *Functional Area:* **ISP Emergency Traveler Information** Collection and distribution of emergency information to the traveler public, including evacuation information and wide-area alerts. | | |
| *Requirement:* | 1 The center shall collect and provide to the traveler interface systems emergency evacuation information, including evacuation zones, shelter information, available transportation modes, road closures and detours, changes to transit services, and traffic and road conditions at the origin, destination, and along the evacuation routes. | Planned |
| *Requirement:* | 3 The center shall collect and provide wide-area alert information to the traveler interface system with region-specific data, including major emergencies such as a natural or man-made disaster, civil emergency, child abductions, severe weather watches and warnings, military activities, and law enforcement warnings. | Planned |
| *Requirement:* | 4 The center shall provide the capability for a system operator to control the type and update frequency of emergency and wide-area alert information distributed to travelers. | Planned |
| *Entity:* **Transit Management** | | |
| *Functional Area:* **Transit Center Vehicle Tracking** Monitoring transit vehicle locations via interactions with on-board systems. Furnish users with real-time transit schedule information and maintain interface with digital map providers. | | |
| *Requirement:* | 1 The center shall monitor the locations of all transit vehicles within its network. | Planned |
| *Requirement:* | 2 The center shall determine adherence of transit vehicles to their assigned schedule. | Planned |
| *Requirement:* | 3 The center shall support an interface with a map update provider, or other appropriate data sources, through which updates of digitized map data can be obtained and used as a background for transit tracking and dispatch. | Planned |
| *Requirement:* | 4 The center shall provide transit operational data to traveler information service providers. | Planned |
| *Functional Area:* **Transit Center Fixed-Route Operations** | | |

| Architecture | | Status |
|---|---|---|
| **Gulf Region ITS Architecture** | | |
| *Element:* **Biloxi and Gulfport Multimodal Transit Centers** | | |
| *Entity:* **Transit Management** | | |
| *Functional Area:* | **Transit Center Fixed-Route Operations**<br>Management of fixed route transit operations. Planning, scheduling, and dispatch associated with fixed and flexible route transit services. Updates customer service operator systems, and provides current vehicle schedule adherence and optimum scenarios for schedule adjustment. | |
| *Requirement:* | 1 The center shall generate transit routes and schedules based on such factors as parameters input by the system operator, road network conditions, operational data on current routes and schedules, and digitized map data. | Planned |
| *Requirement:* | 2 The center shall provide the interface to the system operator to control the generation of new routes and schedules (transit services) including the ability to review and update the parameters used by the routes and schedules generation processes and to initiate these processes | Planned |
| *Requirement:* | 3 The center shall be able to generate special routes and schedules to support an incident, disaster, evacuation, or other emergency. | Planned |
| *Requirement:* | 4 The center shall dispatch fixed route or flexible route transit vehicles | Planned |
| *Requirement:* | 5 The center shall collect transit operational data for use in the generation of routes and schedules. | Planned |
| *Requirement:* | 6 The center shall provide instructions or corrective actions to the transit vehicle operators based upon operational needs. | Planned |
| *Requirement:* | 7 The center shall manage large deviations of individual transit vehicles, deviations in rural areas, and deviations of large numbers of vehicles. | Planned |
| *Requirement:* | 8 The center shall generate the necessary corrective actions which may involve more than the vehicles concerned and more far reaching action, such as, the introduction of extra vehicles, wide area signal priority by traffic management, the premature termination of some services, etc. | Planned |
| *Requirement:* | 9 The center shall exchange information with Maintenance and Construction Operations concerning work zones, roadway conditions, asset restrictions, work plans, etc. | Planned |
| *Requirement:* | 10 The center shall disseminate up-to-date schedules and route information to other centers for fixed and flexible route services. | Planned |
| *Functional Area:* | **Transit Center Fare and Load Management**<br>Management of fare collection at the center - includes setting and distributing fare information, central processing of fares for transit as well as other ITS services, links to financial institutions and enforcement agencies. | |
| *Requirement:* | 1 The center shall manage the actual value of transit fares for each segment of each regular transit route, including the transmission of the information to transit vehicles and transit stops or stations. | Planned |
| *Requirement:* | 2 The center shall provide the capability for a system operator to manage the transit fares and control the exchange of transit fare information. | Planned |
| *Requirement:* | 3 The center shall process the financial requests from the transit vehicles or roadside and manage an interface to a Financial Institution. | Planned |

| Architecture | | | Status |
|---|---|---|---|
| **Gulf Region ITS Architecture** | | | |
| *Element:* **Biloxi and Gulfport Multimodal Transit Centers** | | | |
| *Entity:* **Transit Management** | | | |
| *Functional Area:* | **Transit Center Fare and Load Management**<br>Management of fare collection at the center - includes setting and distributing fare information, central processing of fares for transit as well as other ITS services, links to financial institutions and enforcement agencies. | | |
| *Requirement:* | 4 | The center shall support the payment of transit fare transactions using data provided by the traveler cards / payment instruments. | Planned |
| *Requirement:* | 6 | The center shall process requests for transit fares to be paid in advance. | Planned |
| *Requirement:* | 7 | The center shall process requests for the advanced payment of tolls and parking lot charges as well as other non-transportation services, e.g. yellow-pages services. | Planned |
| *Requirement:* | 8 | The center shall be capable of establishing emergency fare structures to override all other fares during disasters, states of emergency, or evacuations. | Planned |
| *Requirement:* | 9 | The center shall maintain a list of invalid traveler credit identities, or bad tag lists that can be forwarded to transit vehicles and transit stops or stations. | Planned |
| *Requirement:* | 10 | The center shall collect passenger loading and fare statistics data to implement variable and flexible fare structures. | Planned |
| *Requirement:* | 11 | The center shall exchange fare and load information with other transit management centers, including potential Centralized Payments facilities. | Planned |
| *Requirement:* | 12 | The center shall provide transit fare information to other centers, including traveler information providers upon request. | Planned |
| *Functional Area:* | **Transit Center Security**<br>Monitor transit vehicle operator or traveler activated alarms; authenticate transit vehicle operators; remotely disable a transit vehicle; alert operators, travelers, and police to potential incidents identified by these security features. | | |
| *Requirement:* | 1 | The center shall monitor transit vehicle operational data to determine if the transit vehicle is off-route and assess whether a security incident is occurring. | Planned |
| *Requirement:* | 2 | The center shall receive reports of emergencies on-board transit vehicles entered directly be the transit vehicle operator or from a traveler through interfaces such as panic buttons or alarm switches. | Planned |
| *Requirement:* | 3 | The center shall support the back-office portion of functionality to authenticate transit vehicle operators. | Planned |
| *Requirement:* | 4 | The center shall exchange transit incident information along with other service data with other transit agencies. | Planned |
| *Requirement:* | 5 | The center shall receive information pertaining to a wide-area alert such as weather alerts, disaster situations, or child abductions. This information may come from Emergency Management or from other Alerting and Advisory Systems. | Planned |
| *Requirement:* | 6 | The center shall send wide-area alert information to travelers (on-board transit vehicles or at stations/stops) and transit vehicle operators. | Planned |

| Architecture | | Status |
|---|---|---|
| **Gulf Region ITS Architecture** | | |
| *Element:* **Biloxi and Gulfport Multimodal Transit Centers** | | |
| *Entity:* **Transit Management** | | |
| *Functional Area:* | **Transit Center Security**<br>Monitor transit vehicle operator or traveler activated alarms; authenticate transit vehicle operators; remotely disable a transit vehicle; alert operators, travelers, and police to potential incidents identified by these security features. | |
| *Requirement:* | 7 The center shall coordinate the response to security incidents involving transit with other agencies including Emergency Management, other transit agencies, media, traffic management, and traveler information service providers. | Planned |
| *Requirement:* | 8 The center shall receive threat information and status on the integrity of the transit infrastructure. | Planned |
| *Functional Area:* | **Transit Vehicle Operator Scheduling**<br>Assignment of transit vehicles and operators to routes or service areas in a fair manner while minimizing labor and overtime services, considering operator preferences, qualifications, accumulated work hours, and other information about each operator. | |
| *Requirement:* | 1 The center shall maintain records of a transit vehicle operator's performance. This may be done utilizing standardized performance evaluation criteria set forth by governmental regulations and transit operating company policies, assessing the transit vehicle operator's driving history, and assessing comments from the transit vehicle operator's supervisor(s) as well as noting any moving violations or accidents, supervisor comments, government regulations, and company policies. | Planned |
| *Requirement:* | 2 The center shall assess the transit vehicle operator's availability based on previous work assignments, accumulated hours, plus health and vacation commitments. | Planned |
| *Requirement:* | 3 The center shall assign transit vehicle operators to transit schedules based on their eligibility, route preferences, seniority, and transit vehicle availability. | Planned |
| *Requirement:* | 4 The center shall provide an interface through which the transit vehicle operator information can be maintained - either from the transit vehicle operator, a transit system operator (i.e. center personnel), or other functions. | Planned |
| *Functional Area:* | **Transit Center Information Services**<br>Provide interactive traveler information to travelers (on-board transit vehicles, at stops/stations, using personal devices), traveler information service providers, media, and other transit organizations. Includes routes, schedules, transfer options, fares, real-time schedule adherence, current incidents, weather conditions, yellow pages, and special events. | |
| *Requirement:* | 1 The center shall provide travelers using public transportation with traffic and advisory information upon request. Such information may include transit routes, schedules, transfer options, fares, real-time schedule adherence, current incidents, weather conditions, and special events. | Planned |
| *Requirement:* | 2 The center shall provide transit information to the media including details of deviations from schedule of regular transit services. | Planned |

| Architecture | | Status |
|---|---|---|
| **Gulf Region ITS Architecture** | | |
| *Element:* **Biloxi and Gulfport Multimodal Transit Centers** | | |
| *Entity:* **Transit Management** | | |
| *Functional Area:* | **Transit Center Information Services**<br>Provide interactive traveler information to travelers (on-board transit vehicles, at stops/stations, using personal devices), traveler information service providers, media, and other transit organizations. Includes routes, schedules, transfer options, fares, real-time schedule adherence, current incidents, weather conditions, yellow pages, and special events. | |
| *Requirement:* | 3 The center shall exchange transit schedules, real-time arrival information, fare schedules, and general transit service information with other transit organizations to support transit traveler information systems. | Planned |
| *Requirement:* | 4 The center shall provide transit service information to traveler information service providers including routes, schedules, schedule adherence, and fare information as well as transit service information during evacuation. | Planned |
| *Requirement:* | 5 The center shall enable yellow pages (including non-motorized transportation) information to be output to the traveler. | Planned |
| *Requirement:* | 6 The center shall broadcast transit advisory data, including alerts and advisories pertaining to major emergencies, or man made disasters. | Planned |
| *Functional Area:* | **Transit Center Multi-Modal Coordination**<br>Generate requests for transit priority on routes and at certain intersections. Coordinate schedules with other agencies and modes, including transit transfer cluster and transfer point information. | |
| *Requirement:* | 1 The center shall analyze transit vehicle schedule performance to determine the need for priority along certain routes or at certain intersections. | Planned |
| *Requirement:* | 3 The center shall coordinate schedules and services between transit agencies, traffic management, maintenance and construction operations, parking management, and other surface or air transportation modes. | Planned |
| *Requirement:* | 4 The center shall share transfer cluster and transfer point information with multimodal transportation service providers, other transit agencies, and traveler information service providers. A transfer cluster is a collection of stops, stations, or terminals where transfers can be made conveniently. | Planned |
| *Requirement:* | 5 The center shall accept requests from traffic management to change routes and schedules as part of the implementation of demand management strategies. | Planned |
| *Functional Area:* | **Transit Evacuation Support**<br>Support evacuation and subsequent reentry of a population in the vicinity of a disaster or other emergency. Coordinate regional evacuation plans and resources including transit and school bus fleets. | |
| *Requirement:* | 1 The center shall manage the use of transit resources to support evacuation and subsequent reentry of a population in the vicinity of a disaster or other emergency. | Planned |
| *Requirement:* | 2 The center shall coordinate regional evacuation plans with Emergency Management - identifying the transit role in an evacuation and the transit resources that would be used. | Planned |

| Architecture | | Status |
|---|---|---|
| **Gulf Region ITS Architecture** | | |
| *Element:* **Biloxi and Gulfport Multimodal Transit Centers** | | |
| *Entity:* **Transit Management** | | |
| *Functional Area:* **Transit Evacuation Support** Support evacuation and subsequent reentry of a population in the vicinity of a disaster or other emergency. Coordinate regional evacuation plans and resources including transit and school bus fleets. | | |
| *Requirement:* | 3 The center shall coordinate the use of transit and school bus fleets during an evacuation, supporting evacuation of those with special needs and the general population. | Planned |
| *Requirement:* | 4 The center shall adjust and update transit service and fare schedules and provide that information to other agencies as they coordinate evacuations. | Planned |
| *Functional Area:* **Transit Data Collection** Collection and storage of transit management data. For use by operations personnel or data archives in the region. | | |
| *Requirement:* | 1 The center shall collect transit management data such as transit fares and passenger use, transit services, paratransit operations, transit vehicle maintenance data, etc. | Planned |
| *Element:* **Biloxi and Gulfport Multimodal Transit Centers Kiosks** | | |
| *Entity:* **Remote Traveler Support** | | |
| *Functional Area:* **Remote Basic Information Reception** Public traveler interface, such as a kiosk, that provides formatted traffic advisories, transit, event, and other traveler information, as well as broadcast alerts. | | |
| *Requirement:* | 1 The public interface for travelers shall receive traffic information from a center and present it to the traveler. | Planned |
| *Requirement:* | 2 The public interface for travelers shall receive transit information from a center and present it to the traveler. | Planned |
| *Requirement:* | 3 The public interface for travelers shall receive event information from a center and present it to the traveler. | Planned |
| *Requirement:* | 4 This public interface for travelers shall receive evacuation information from a center and present it to the traveler. | Planned |
| *Requirement:* | 5 The public interface for travelers shall receive wide-area alerts and present it to the traveler. | Planned |
| *Requirement:* | 6 The public interface for travelers shall provide the capability for digitized map data to act as the background to the information presented to the traveler. | Planned |
| *Requirement:* | 7 The public interface for travelers shall support traveler input in audio or manual form. | Planned |
| *Requirement:* | 8 The public interface for travelers shall present information to the traveler in audible or visual forms consistent with a kiosk, including those that are suitable for travelers with hearing or vision physical disabilities. | Planned |
| *Requirement:* | 9 The public interface for travelers shall be able to store frequently requested data. | Planned |
| *Functional Area:* **Remote Interactive Information Reception** Public traveler interface, such as a kiosk, that provides traffic, transit, yellow pages, special event, and other personalized traveler information services upon request. | | |

| Architecture | | Status |
|---|---|---|
| **Gulf Region ITS Architecture** | | |
| *Element:* **Biloxi and Gulfport Multimodal Transit Centers Kiosks** | | |
| *Entity:* **Remote Traveler Support** | | |
| *Functional Area:* **Remote Interactive Information Reception** Public traveler interface, such as a kiosk, that provides traffic, transit, yellow pages, special event, and other personalized traveler information services upon request. | | |
| *Requirement:* | 1 The public interface for travelers shall receive traffic information from a center and present it to the traveler upon request. | Planned |
| *Requirement:* | 2 The public interface for travelers shall receive transit information from a center and present it to the traveler upon request. | Planned |
| *Requirement:* | 3 The public interface for travelers shall receive yellow pages information (such as lodging, restaurants, theaters, bicycle facilities, and other tourist activities) from a center and present it to the traveler upon request. | Planned |
| *Requirement:* | 4 The public interface for travelers shall receive event information from a center and present it to the traveler upon request. | Planned |
| *Requirement:* | 5 The public interface for travelers shall receive evacuation information from a center and present it to the traveler. | Planned |
| *Requirement:* | 6 The public interface for travelers shall receive wide-area alerts and present it to the traveler. | Planned |
| *Requirement:* | 7 The public interface for travelers shall accept reservations for confirmed trip plans. | Planned |
| *Requirement:* | 8 The public interface for travelers shall support payment for services, such as confirmed trip plans, confirmed yellow pages services, tolls, transit fares, parking lot charges, and advanced payment for tolls. | Planned |
| *Requirement:* | 9 The public interface for travelers shall provide an interface through which credit identities and stored credit values may be collected from tags, traveler cards, or payment instruments used by travelers. | Planned |
| *Requirement:* | 10 The public interface for travelers shall base requests from the traveler on the traveler's current location or a specific location identified by the traveler, and filter the provided information accordingly. | Planned |
| *Requirement:* | 11 The public interface for travelers shall provide digitized map data to act as the background to the information presented to the traveler. | Planned |
| *Requirement:* | 12 The public interface for travelers shall support traveler input in audio or manual form. | Planned |
| *Requirement:* | 13 The public interface for travelers shall present information to the traveler in audible or visual forms consistent with a kiosk, including those that are suitable for travelers with hearing or vision physical disabilities. | Planned |
| *Requirement:* | 14 The public interface for travelers shall be able to store frequently requested data. | Planned |
| *Functional Area:* **Remote Transit Information Services** | | |

| Architecture | | Status |
|---|---|---|
| **Gulf Region ITS Architecture** | | |
| *Element:* **Biloxi and Gulfport Multimodal Transit Centers Kiosks** | | |
| *Entity:* **Remote Traveler Support** | | |
| *Functional Area:* | **Remote Transit Information Services**<br>Public traveler interface that provides real-time travel-related information at transit stops and multi-modal transfer points, including general annunciation, display of imminent arrival information, the latest available information on transit routes, schedules, transfer options, available services, fares, and real-time schedule adherence. | |
| *Requirement:* | 1 The public interface for travelers shall collect and provide real-time travel-related information at transit stops, multi-modal transfer points, and other public transportation areas. | Planned |
| *Requirement:* | 2 The public interface for travelers shall collect and present to the transit traveler information on transit routes, schedules, and real-time schedule adherence. | Planned |
| *Requirement:* | 3 The public interface for travelers shall provide support for general annunciation and/or display of imminent arrival information and other information of general interest to transit users. | Planned |
| *Requirement:* | 4 The public interface for travelers shall present information to the traveler in a form suitable for travelers with physical disabilities. | Planned |
| *Functional Area:* | **Remote Transit Fare Management**<br>Public traveler interface, such as a kiosk, that provides the capability for the traveler to use a common fare medium for transit fares, tolls, and/or parking lot charges, to calculate the amount due and identify payment problems. | |
| *Requirement:* | 1 The public interface for travelers shall accept and process current transit passenger fare collection information. | Planned |
| *Requirement:* | 2 The public interface for travelers shall calculate a fare based on the origin and destination provided by the traveler, in conjunction with transit routing, transit fare category, and transit user history. | Planned |
| *Requirement:* | 3 The public interface for travelers shall provide an interface to a transit user traveler card in support of payment for transit fares, tolls, and/or parking lot charges. The stored credit value data from the card shall be collected and updated based on the fare or other charges, or the credit identity shall be collected. | Planned |
| *Requirement:* | 4 The public interface for travelers shall provide information to the center for financial authorization and transaction processing. | Planned |
| *Requirement:* | 6 The public interface for travelers shall determine the routing based on the traveler's destination and the location of the closest transit stop from which a route request is being made. | Planned |
| *Requirement:* | 7 The public interface for travelers shall create passenger loading and fare statistics data based upon data collected at a transit stop. | Planned |
| *Requirement:* | 8 The public interface for travelers shall present information to the traveler in a form suitable for travelers with physical disabilities. | Planned |
| *Element:* **City of Biloxi Database** | | |
| *Entity:* **Archived Data Management Subsystem** | | |
| *Functional Area:* | **ITS Data Repository**<br>Collect and maintain data and data catalogs from one or more data sources. May include quality checks, error notification, and archive coordination. | |

| Architecture | | Status |
|---|---|---|
| **Gulf Region ITS Architecture** | | |
| *Element:* **City of Biloxi Database** | | |
| *Entity:* **Archived Data Management Subsystem** | | |
| *Functional Area:* **ITS Data Repository**<br>Collect and maintain data and data catalogs from one or more data sources. May include quality checks, error notification, and archive coordination. | | |
| *Requirement:* | 1 The center shall collect data to be archived from one or more data sources. | Planned |
| *Requirement:* | 2 The center shall collect data catalogs from one or more data sources. A catalog describes the data contained in the collection of archived data and may include descriptions of the schema or structure of the data, a description of the contents of the data; e.g., time range of entries, number of entries; or a sample of the data (e. g. a thumbnail). | Planned |
| *Requirement:* | 3 The center shall store the archived data in a focused repository that is suited to a particular set of ITS data users. | Planned |
| *Requirement:* | 4 The center shall include capabilities for performing quality checks on the incoming archived data. | Planned |
| *Requirement:* | 5 The center shall include capabilities for error notification on the incoming archived data. | Planned |
| *Requirement:* | 6 The center shall include capabilities for archive to archive coordination. | Planned |
| *Requirement:* | 8 The center shall perform quality checks on received data. | Planned |
| *Requirement:* | 9 The center shall provide the capability to execute methods on the incoming data such as cleansing, summarizations, aggregations, or transformations applied to the data before it is stored in the archive. | Planned |
| *Requirement:* | 10 The center shall respond to requests from the administrator interface function to maintain the archive data. | Planned |
| *Requirement:* | 11 When data or a catalog of data is received from the archive, the center shall generate the requested data product for the users systems. | Planned |
| *Requirement:* | 12 For archive data requiring financial payment, the center shall process the financial requests and manage an interface to a Financial Institution. | Planned |
| *Functional Area:* **Traffic and Roadside Data Archival**<br>Collects and archives traffic and environmental information directly from the roadside for use in off-line planning, research, and analysis. | | |
| *Requirement:* | 1 The center shall manage the collection of archive data directly from collection equipment located at the roadside. | Planned |
| *Requirement:* | 2 The center shall collect traffic sensor information from roadside devices. | Planned |
| *Requirement:* | 4 The center shall respond to requests from the Archive Data Administer to input the parameters that control the collection process. | Planned |
| *Requirement:* | 5 The center shall send the request for data and control parameters to the field equipment where the information is collected and returned. | Planned |
| *Requirement:* | 6 The center shall record the status about the imported traffic and roadside data. | Planned |

| Architecture | | Status |
|---|---|---|
| **Gulf Region ITS Architecture** | | |
| *Element:* **City of Biloxi Database** | | |
| *Entity:* **Archived Data Management Subsystem** | | |
| *Functional Area:* **Traffic and Roadside Data Archival**<br>Collects and archives traffic and environmental information directly from the roadside for use in off-line planning, research, and analysis. | | |
| *Requirement:* | 7 The center shall use the status information to adjust the collection | Planned |
| *Element:* **City of Biloxi Emergency Vehicles** | | |
| *Entity:* **Emergency Vehicle Subsystem** | | |
| *Functional Area:* **On-board EV En Route Support**<br>On-board systems for gathering of dispatch and routing information for emergency vehicle personnel, vehicle tracking, communications with care facilities, and signal preemption via short range communication directly with traffic control equipment at the roadside. | | |
| *Requirement:* | 1 The emergency vehicle, including roadway service patrols, shall compute the location of the emergency vehicle based on inputs from a vehicle location determination function. | Planned |
| *Requirement:* | 2 The emergency vehicle, including roadway service patrols, shall send the vehicle's location and operational data to the center for emergency management and dispatch. | Planned |
| *Requirement:* | 3 The emergency vehicle, including roadway service patrols, shall receive incident details and a suggested route when dispatched to a scene. | Planned |
| *Requirement:* | 4 The emergency vehicle shall send the current en route status (including estimated time of arrival) and requests for emergency dispatch updates. | Planned |
| *Requirement:* | 5 The emergency vehicle shall send requests to traffic signal control equipment at the roadside to preempt the signal. | Planned |
| *Requirement:* | 6 The emergency vehicle shall provide the personnel on-board with dispatch information, including incident type and location, and forward an acknowledgment from personnel to the center that the vehicle is on its way to the incident scene. | Planned |
| *Requirement:* | 7 The emergency vehicle shall send patient status information to the care facility along with a request for further information. | Planned |
| *Requirement:* | 8 The emergency vehicle shall forward care facility status information to emergency vehicle personnel, including the location, specialized services, quality of care, waiting time, number of rooms available, and emergency room status of hospitals or emergency care providers. | Planned |
| *Functional Area:* **On-board EV Incident Management Communication**<br>On-board systems provide communications support to first responders. Incident information is provided to dispatched emergency personnel. Emergency personnel transmit information about the incident and response status. | | |
| *Requirement:* | 1 The emergency vehicle shall receive dispatch instructions sufficient to enable emergency personnel in the field to implement an effective incident response. It includes local traffic, road, and weather conditions, hazardous material information, and the current status of resources that have been allocated to an incident. | Existing |

| Architecture | | Status |
|---|---|---|
| **Gulf Region ITS Architecture** | | |
| *Element:* **City of Biloxi Emergency Vehicles** | | |
| *Entity:* **Emergency Vehicle Subsystem** | | |
| *Functional Area:* | **On-board EV Incident Management Communication**<br>On-board systems provide communications support to first responders. Incident information is provided to dispatched emergency personnel. Emergency personnel transmit information about the incident and response status. | |
| *Requirement:* | 2 The emergency vehicle shall provide an interface to the center for emergency personnel to transmit information about the incident site such as the extent of injuries, identification of vehicles and people involved, hazardous material, etc. | Existing |
| *Requirement:* | 3 The emergency vehicle shall provide an interface to the center for emergency personnel to transmit information about the current incident response status such as the identification of the resources on site, site management strategies in effect, and current clearance status. | Existing |
| *Element:* **City of Biloxi Police Red Light Running Cameras** | | |
| *Entity:* **Roadway Subsystem** | | |
| *Functional Area:* | **Roadway Equipment Coordination**<br>Field elements that control and send data to other field elements (such as environmental sensors that send data to a DMS or coordination between traffic controllers on adjacent intersections), without center control. | |
| *Requirement:* | 1 The field element shall include sensors (such as traffic, environmental, and work zone intrusion detection sensors) that provide data and status information to other field element devices (such as dynamic message signs, ramp meters, traffic signals, work zone intrusion alert systems), without center control. | Planned |
| *Requirement:* | 2 The field element shall include sensors (such as traffic, environmental, and work zone intrusion detection sensors) that receive control information from other field element devices, without center control. | Planned |
| *Requirement:* | 3 The field element shall include devices (such as arterial or freeway controllers, roadway automated treatment systems, barrier and safeguard systems, emissions or pollution systems, and work zone intrusion alert systems) that provide data and status information to other field element devices (such as dynamic message signs, traffic controllers on adjacent intersections), without center control. | Planned |
| *Requirement:* | 4 The field element shall include devices (such as arterial or freeway controllers, roadway automated treatment systems, barrier and safeguard systems, emissions or pollution systems, and work zone intrusion alert systems) that receive control information from other field element devices, without center control. | Planned |
| *Functional Area:* | **Roadway Speed Monitoring**<br>Vehicle speed sensors that detect excessive vehicle speeds, informing drivers, centers and/or enforcement agencies of speed violations. | |
| *Requirement:* | 2 The field element shall include sensors to detect vehicle speeds, under enforcement agency control. | Planned |
| *Requirement:* | 5 The field element shall monitor notify an enforcement agency when a speed violation is detected. | Planned |

| Architecture | | Status |
|---|---|---|
| **Gulf Region ITS Architecture** | | |
| *Element:* **City of Biloxi Police Red Light Running Cameras** | | |
| *Entity:* **Roadway Subsystem** | | |
| *Functional Area:* | **Roadway Speed Monitoring**<br>Vehicle speed sensors that detect excessive vehicle speeds, informing drivers, centers and/or enforcement agencies of speed violations. | |
| *Requirement:* | 7 The field element shall return operational status for the vehicle speed sensors to the enforcement agency. | Planned |
| *Requirement:* | 8 The field element shall return fault data for the vehicle speed sensors to the controlling center for repair. | Planned |
| *Element:* **City of Biloxi Public Affairs** | | |
| *Entity:* **Information Service Provider** | | |
| *Functional Area:* | **ISP Traveler Data Collection**<br>Collects traveler information from other centers, consolidates and refines the collected data, and makes this data available to traveler information applications. | |
| *Requirement:* | 1 The center shall collect, process, and store traffic and highway condition information, including incident information, detours and road closures, event information, recommended routes, and current speeds on specific routes. | Existing |
| *Requirement:* | 2 The center shall collect, process, and store maintenance and construction information, including scheduled maintenance and construction work activities and work zone activities. | Existing |
| *Functional Area:* | **Basic Information Broadcast**<br>Collection, processing, storage, and broadcast dissemination of traffic, transit, maintenance and construction, event, and weather information to traveler interface systems and vehicles. | |
| *Requirement:* | 1 The center shall collect, process, store, and disseminate traffic and highway condition information to travelers, including incident information, detours and road closures, event information, recommended routes, and current speeds on specific routes. | Existing |
| *Requirement:* | 2 The center shall collect, process, store, and disseminate maintenance and construction information to travelers, including scheduled maintenance and construction work activities and work zone activities. | Existing |
| *Requirement:* | 9 The center shall provide the capability to support requests from the media for traffic and incident data. | Existing |
| *Requirement:* | 10 The center shall provide the capability for a system operator to control the type and update frequency of broadcast traveler information. | Existing |
| *Functional Area:* | **ISP Emergency Traveler Information**<br>Collection and distribution of emergency information to the traveler public, including evacuation information and wide-area alerts. | |
| *Requirement:* | 3 The center shall collect and provide wide-area alert information to the traveler interface system with region-specific data, including major emergencies such as a natural or man-made disaster, civil emergency, child abductions, severe weather watches and warnings, military activities, and law enforcement warnings. | Existing |

| Architecture | | Status |
|---|---|---|
| **Gulf Region ITS Architecture** | | |
| *Element:* **City of Biloxi Public Affairs** | | |
| *Entity:* **Information Service Provider** | | |
| *Functional Area:* | **ISP Emergency Traveler Information**<br>Collection and distribution of emergency information to the traveler public, including evacuation information and wide-area alerts. | |
| *Requirement:* | 4 The center shall provide the capability for a system operator to control the type and update frequency of emergency and wide-area alert information distributed to travelers. | Existing |
| *Element:* **City of Biloxi Public Works** | | |
| *Entity:* **Maintenance and Construction Management** | | |
| *Functional Area:* | **MCM Work Zone Management**<br>Remotely monitors and supports work zone activities, controlling traffic through dynamic message signs (DMS), highway advisory radio, gates and barriers, and informing other groups of activity (e.g., traveler information systems, traffic management centers, other maintenance and construction centers). | |
| *Requirement:* | 3 The center shall disseminate work zone information to other agencies and centers including traffic, transit, emergency management centers, other maintenance centers, traveler information providers, and the media. | Planned |
| *Requirement:* | 4 The center shall control traffic in work zones by providing remote control of dynamic message signs, highway advisory radio systems, gates, and barriers located in or near the work zone. | Planned |
| *Requirement:* | 5 The center shall exchange information with administrative systems to support the planning and scheduling of work zone activities. This information includes: equipment and consumables resupply purchase request status, personnel qualifications including training and special certifications, environmental regulations and rules that may impact maintenance activities, and requests and project requirements from contract administration. | Planned |
| *Functional Area:* | **MCM Work Activity Coordination**<br>Disseminates work activity schedules and current asset restrictions to other agencies. Work schedules are coordinated, factoring in the needs and activities of other agencies and adjacent jurisdictions. | |
| *Requirement:* | 1 The center shall provide work zone activities affecting the road network including the nature of the maintenance or construction activity, location, impact to the roadway, expected time(s) and duration of impact, anticipated delays, alternate routes, and suggested speed limits. This information may be augmented with<br>images that provide a visual indication of current work zone | Planned |
| *Requirement:* | 2 The center shall provide status information about scheduled maintenance and construction activities including anticipated closures and impact to the roadway, alternate routes, anticipated delays, closure times, and durations. The information is provided to other management centers such as traffic, emergency, transit, traveler information providers, other maintenance centers, multimodal transportation providers, rail operations, and the media. | Planned |

| Architecture | | Status |
|---|---|---|
| **Gulf Region ITS Architecture** | | |
| *Element:* **City of Biloxi Public Works** | | |
| *Entity:* **Maintenance and Construction Management** | | |
| *Functional Area:* | **MCM Work Activity Coordination**<br>Disseminates work activity schedules and current asset restrictions to other agencies. Work schedules are coordinated, factoring in the needs and activities of other agencies and adjacent jurisdictions. | |
| *Requirement:* | 3 The center shall collect and respond to feedback concerning scheduled maintenance and construction activities with other management centers such as traffic, emergency, transit, and rail operations. | Planned |
| *Requirement:* | 4 The center shall collect and disseminate asset restriction information levied on transportation asset usage based on infrastructure design, surveys, tests, or analyses. This includes standard facility design height, width, and weight restrictions, special restrictions such as spring weight restrictions, and temporary facility restrictions that are imposed during maintenance and construction. | Planned |
| *Requirement:* | 5 The center shall exchange information with administrative systems to support the planning and scheduling of maintenance and construction activities. This information includes: equipment and consumables resupply purchase request status, personnel qualifications including training and special certifications, environmental regulations and rules that may impact maintenance activities, and requests and project requirements from contract administration. | Planned |
| *Requirement:* | 6 The center shall exchange rail schedules and work plans with rail operations centers. | Planned |
| *Functional Area:* | **MCM Data Collection**<br>Collection and storage of maintenance and construction information. For use by operations personnel or data archives in the region. | |
| *Requirement:* | 1 The center shall collect maintenance and construction data (such as field equipment status, infrastructure status, maintenance and construction activity data) gathered from roadway, traffic, and other maintenance and construction sources. | Planned |
| *Requirement:* | 2 The center shall assign quality control metrics and meta-data to be stored along with the data. Meta-data may include attributes that describe the source and quality of the data and the conditions surrounding the collection of the data. | Planned |
| *Requirement:* | 3 The center shall receive and respond to requests from ITS Archives for either a catalog of the maintenance and construction data or for the data itself. | Planned |
| *Requirement:* | 4 The center shall be able to produce sample products of the data available. | Planned |
| *Requirement:* | 5 The center shall provide data to Asset Management to be used in updating the status of assets in the inventory. | Planned |
| *Element:* **City of Biloxi TOC** | | |
| *Entity:* **Traffic Management** | | |
| *Functional Area:* | **Collect Traffic Surveillance**<br>Management of traffic sensors and surveillance (CCTV) equipment, and distribution of the collected information to other centers and operators. | |

| Architecture | | Status |
|---|---|---|
| **Gulf Region ITS Architecture** | | |
| *Element:* **City of Biloxi TOC** | | |
| *Entity:* **Traffic Management** | | |
| *Functional Area:* **Collect Traffic Surveillance** Management of traffic sensors and surveillance (CCTV) equipment, and distribution of the collected information to other centers and operators. | | |
| *Requirement:* | 1 The center shall monitor, analyze, and store traffic sensor data (speed, volume, occupancy) collected from field elements under remote control of the center. | Planned |
| *Requirement:* | 2 The center shall monitor, analyze, and distribute traffic images from CCTV systems under remote control of the center. | Planned |
| *Requirement:* | 4 The center shall distribute road network conditions data (raw or processed) based on collected and analyzed traffic sensor and surveillance data to other centers. | Planned |
| *Requirement:* | 5 The center shall respond to control data from center personnel regarding sensor and surveillance data collection, analysis, storage, and distribution. | Planned |
| *Requirement:* | 6 The center shall maintain a database of surveillance and sensors and the freeways, surface street and rural roadways, e.g. where they are located, to which part(s) of the network their data applies, the type of data, and the ownership of each link (that is, the agency or entity responsible for collecting and storing surveillance of the link) in the network. | Planned |
| *Requirement:* | 7 The center shall support an interface with a map update provider, or other appropriate data sources, through which updates of digitized map data can be obtained and used as a background for traffic data. | Planned |
| *Functional Area:* **TMC Signal Control** Remotely controls traffic signal controllers to implement traffic management strategies at signalized intersections based on traffic conditions, incidents, emergency vehicle preemptions, pedestrian crossings, etc. | | |
| *Requirement:* | 1 The center shall remotely control traffic signal controllers. | Planned |
| *Requirement:* | 2 The center shall accept notifications of right-of-way requests from pedestrians. | Planned |
| *Requirement:* | 3 The center shall collect traffic signal controller operational status and compare against the control information sent by the center. | Planned |
| *Requirement:* | 4 The center shall collect traffic signal controller fault data from the field. | Planned |
| *Requirement:* | 5 The center shall implement control plans to coordinate signalized intersections, under control of center personnel, based on data from sensors and surveillance monitoring traffic conditions, incidents, emergency vehicle preemptions, the passage of commercial vehicles with unusual loads, equipment faults, pedestrian crossings, etc. | Planned |
| *Functional Area:* **TMC Traffic Information Dissemination** Controls dissemination of traffic-related data to other centers, the media, and travelers via the driver information systems (DMS, HAR) that it operates. | | |
| *Requirement:* | 1 The center shall remotely control dynamic messages signs for dissemination of traffic and other information to drivers. | Planned |
| *Requirement:* | 3 The center shall collect operational status for the driver information systems equipment (DMS, HAR, etc.). | Planned |

| Architecture | | Status |
|---|---|---|
| **Gulf Region ITS Architecture** | | |
| *Element:* **City of Biloxi TOC** | | |
| *Entity:* **Traffic Management** | | |
| *Functional Area:* | **TMC Traffic Information Dissemination**<br>Controls dissemination of traffic-related data to other centers, the media, and travelers via the driver information systems (DMS, HAR) that it operates. | |
| *Requirement:* | 4 The center shall collect fault data for the driver information systems equipment (DMS, HAR, etc.) for repair. | Planned |
| *Requirement:* | 5 The center shall retrieve locally stored traffic information, including current and forecasted traffic information, road and weather conditions, traffic incident information, information on diversions and alternate routes, closures, and special traffic restrictions (lane/shoulder use, weight restrictions, width restrictions, HOV requirements), etc. | Planned |
| *Requirement:* | 8 The center shall provide the capability for center personnel to control the nature of the data that is available to non-traffic operations centers and the media. | Planned |
| *Functional Area:* | **TMC Regional Traffic Control**<br>Coordination between traffic management centers in order to share traffic information between centers as well as control of traffic management field equipment. This may be used during incidents and special events and during day-to-day operations. | |
| *Requirement:* | 1 The center shall exchange traffic information with other traffic management centers, includes incident information, congestion data, traffic data, signal timing plans, and real-time signal control information. | Planned |
| *Requirement:* | 2 The center shall exchange traffic control information with other traffic management centers, includes remote monitoring and control of traffic management devices (e.g. signs, sensors, signals, cameras, etc.). | Planned |
| *Functional Area:* | **TMC Incident Detection**<br>Remotely controls traffic and video sensors to support incident detection and verification; exchange information with other agencies including emergency management, maintenance and construction, alerting and advisory systems, event promoters, intermodal freight depots, and traveler information systems. | |
| *Requirement:* | 1 The center shall receive inputs from the Alerting and Advisory System concerning the possibility or occurrence of severe weather, terrorist activity, or other major emergency, including information provided by the Emergency Alert System. | Existing |
| *Requirement:* | 2 The center shall collect and store traffic flow and image data from the field equipment to detect and verify incidents. | Planned |
| *Requirement:* | 3 The center shall receive inputs concerning upcoming events that would effect the traffic network from event promoters, traveler information service providers, and intermodal freight depots. | Existing |
| *Requirement:* | 4 The center shall exchange incident and threat information with emergency management centers as well as maintenance and construction centers; including notification of existence of incident and expected severity, location, time and nature of incident. | Existing |
| *Requirement:* | 6 The center shall provide road network conditions and traffic images to emergency management centers to support the detection, verification, and classification of incidents. | Planned |

| Architecture | | Status |
|---|---|---|
| **Gulf Region ITS Architecture** | | |
| *Element:* **City of Biloxi TOC** | | |
| *Entity:* **Traffic Management** | | |
| *Functional Area:* | **TMC Incident Detection**<br>Remotely controls traffic and video sensors to support incident detection and verification; exchange information with other agencies including emergency management, maintenance and construction, alerting and advisory systems, event promoters, intermodal freight depots, and traveler information systems. | |
| *Requirement:* | 7 The center shall provide video and traffic sensor control commands to the field equipment to detect and verify incidents. | Planned |
| *Functional Area:* | **TMC Incident Dispatch Coordination/Communication**<br>Center-based capability to formulate an incident response that takes into account the incident potential, incident impacts, and/or resources required for incident management including proposing and facilitating the dispatch of emergency response and service vehicles as well as coordinating response with all appropriate cooperating agencies. | |
| *Requirement:* | 1 The center shall exchange alert information and status with emergency management centers. The information includes notification of a major emergency such as a natural or man-made disaster, civil emergency, or child abduction for distribution to the public. The information may include the alert originator, the nature of the emergency, the geographic area affected by the emergency, the effective time period, and information and instructions necessary for the public to respond to the alert. This may also identify specific information that should not be released to the public. | Existing |
| *Requirement:* | 2 The center shall coordinate planning for incidents with emergency management centers - including pre-planning activities for disaster response, evacuation, and recovery operations. | Existing |
| *Requirement:* | 3 The center shall support requests from emergency management centers to remotely control sensor and surveillance equipment located in the field, provide special routing for emergency vehicles, and to provide responding emergency vehicles with signal preemption. | Planned |
| *Requirement:* | 4 The center shall exchange incident and threat information with emergency management centers as well as maintenance and construction centers; including notification of existence of incident and expected severity, location, time and nature of incident. | Existing |
| *Requirement:* | 5 The center shall respond to requests from emergency management to provide traffic management resources to implement special traffic control measures, assist in clean up, verify an incident, etc. This may also involve coordination with maintenance centers. | Planned |
| *Requirement:* | 6 The center shall receive inputs concerning upcoming events that would effect the traffic network from event promoters, traveler information service providers, media, and rail operations centers. | Existing |
| *Requirement:* | 7 The center shall provide road network conditions and traffic images to emergency management centers, maintenance and construction centers, and traveler information service providers. | Planned |
| *Requirement:* | 9 The center shall coordinate information and controls with other traffic management centers. | Planned |

| Architecture | | | Status |
|---|---|---|---|
| **Gulf Region ITS Architecture** | | | |
| *Element:* **City of Biloxi TOC** | | | |
| *Entity:* **Traffic Management** | | | |
| *Functional Area:* | **TMC Incident Dispatch Coordination/Communication** Center-based capability to formulate an incident response that takes into account the incident potential, incident impacts, and/or resources required for incident management including proposing and facilitating the dispatch of emergency response and service vehicles as well as coordinating response with all appropriate cooperating agencies. | | |
| *Requirement:* | 11 | The center shall support an interface with a map update provider, or other appropriate data sources, through which updates of digitized map data can be obtained and used as a background for traffic incident management. | Planned |
| *Functional Area:* | **TMC Evacuation Support** Development, coordination, and execution of special traffic management strategies during evacuation and subsequent reentry of a population in the vicinity of a disaster or major emergency. Interfaces with emergency management and other traffic management centers. | | |
| *Requirement:* | 1 | The center shall coordinate planning for evacuation with emergency management centers - including pre-planning activities such as establishing routes, areas to be evacuated, timing, etc. | Existing |
| *Requirement:* | 2 | The center shall support requests from emergency management centers to preempt the current traffic control strategy, activate traffic control and closure systems such as gates and barriers, activate safeguard systems, or use driver information systems to support evacuation traffic control plans. | Existing |
| *Requirement:* | 3 | The center shall coordinate information and controls with other traffic management centers. | Existing |
| *Requirement:* | 4 | The center shall coordinate execution of evacuation strategies with emergency management centers - including activities such as setting closures and detours, establishing routes, updating areas to be evacuated, timing the process, etc. | Existing |
| *Functional Area:* | **HRI Traffic Management** Remotely monitor and control highway-rail intersection (HRI) equipment, includes standard speed active warning systems and high speed systems which provide additional information on approaching trains and detect and report on obstructions in the HRI. | | |
| *Requirement:* | 1 | The center shall remotely control highway-rail intersection (HRI) equipment located in the field. | Planned |
| *Requirement:* | 2 | The center shall accept collect highway-rail intersection (HRI) advisory or alert data from rail operations centers. | Planned |
| *Requirement:* | 3 | The center shall collect highway-rail intersection (HRI) equipment operational status and compare against the control information sent by the center. | Planned |
| *Requirement:* | 4 | The center shall provide the highway-rail intersection (HRI) equipment operational status to rail operations centers. | Planned |
| *Requirement:* | 5 | The center shall collect incident information related to a highway-rail intersection (HRI), such as intersection blockages or crashes or equipment malfunctions. | Planned |

| Architecture | | Status |
|---|---|---|
| **Gulf Region ITS Architecture** | | |
| *Element:* **City of Biloxi TOC** | | |
| *Entity:* **Traffic Management** | | |
| *Functional Area:* | **HRI Traffic Management**<br>Remotely monitor and control highway-rail intersection (HRI) equipment, includes standard speed active warning systems and high speed systems which provide additional information on approaching trains and detect and report on obstructions in the HRI. | |
| *Requirement:* | 6 The center shall implement control plans to coordinate signalized intersections around highway-rail intersections (HRI), under control of center personnel, based on data from sensors and surveillance monitoring traffic conditions, incidents, equipment faults, pedestrian crossings, etc. | Planned |
| *Functional Area:* | **Traffic Maintenance**<br>Monitoring and remote diagnostics of field equipment - detect failures, issue problem reports, and track the repair or replacement of the failed equipment. | |
| *Requirement:* | 1 The center shall collect and store sensor (traffic, pedestrian, multimodal crossing) operational status. | Planned |
| *Requirement:* | 2 The center shall collect and store CCTV surveillance system (traffic, pedestrian) operational status. | Planned |
| *Requirement:* | 3 The center shall collect and store sensor (traffic, pedestrian, multimodal crossing) fault data and send to the maintenance center for repair. | Planned |
| *Requirement:* | 4 The center shall collect and store CCTV surveillance system (traffic, pedestrian) fault data send to the maintenance center for repair. | Planned |
| *Requirement:* | 7 The center shall exchange data with maintenance centers concerning the reporting of faulty equipment and the schedule/status of their repair. Information exchanged includes details of new equipment faults, and clearances when the faults are cleared. | Planned |
| *Requirement:* | 8 The center shall support an interface with a map update provider, or other appropriate data sources, through which updates of digitized map data can be obtained and used as a background for traffic maintenance data. | Planned |
| *Functional Area:* | **TMC Work Zone Traffic Management**<br>Coordination with maintenance systems using work zone images and traveler information systems (such as DMS), and distribution of work plans so that work zones are established that have minimum traffic impact. | |
| *Requirement:* | 3 The center shall remotely control driver information systems (such as dynamic messages signs, highway advisory radios) to advise drivers of activity around a work zone. | Planned |
| *Requirement:* | 4 The center shall collect operational status for the driver information systems equipment in work zones. | Planned |
| *Requirement:* | 5 The center shall collect fault data for the driver information systems equipment in work zones for repair. | Planned |
| *Functional Area:* | **TMC Multimodal Coordination**<br>Provides traffic signal priority for transit vehicles based on center-to-center communications with the transit management center; also exchange traffic and transit information. | |

| Architecture | | Status |
|---|---|---|
| **Gulf Region ITS Architecture** | | |
| *Element:* **City of Biloxi TOC** | | |
| *Entity:* **Traffic Management** | | |
| *Functional Area:* | **TMC Multimodal Coordination**<br>Provides traffic signal priority for transit vehicles based on center-to-center communications with the transit management center; also exchange traffic and transit information. | |
| *Requirement:* | 1 The center shall respond to requests from transit management centers for signal priority at one or more intersections along a particular transit route. | Planned |
| *Requirement:* | 2 The center shall exchange information with transit management centers including details current transit routes, the level of service on each route, and the progress of individual vehicles along their routes. | Planned |
| *Functional Area:* | **Traffic Data Collection**<br>Collection and storage of traffic management data. For use by operations personnel or data archives in the region. | |
| *Requirement:* | 1 The center shall collect traffic management data such as operational data, event logs, etc. | Planned |
| *Requirement:* | 2 The center shall assign quality control metrics and meta-data to be stored along with the data. Meta-data may include attributes that describe the source and quality of the data and the conditions surrounding the collection of the data. | Planned |
| *Requirement:* | 3 The center shall receive and respond to requests from ITS Archives for either a catalog of the traffic data or for the data itself. | Planned |
| *Requirement:* | 4 The center shall be able to produce sample products of the data available. | Planned |
| *Element:* **City of Biloxi TOC Roadside Equipment** | | |
| *Entity:* **Roadway Subsystem** | | |
| *Functional Area:* | **Roadway Basic Surveillance**<br>Field elements that monitor traffic conditions using loop detectors and CCTV cameras. | |
| *Requirement:* | 1 The field element shall collect, process, digitize, and send traffic sensor data (speed, volume, and occupancy) to the center for further analysis and storage, under center control. | Planned |
| *Requirement:* | 2 The field element shall collect, process, and send traffic images to the center for further analysis and distribution. | Planned |
| *Requirement:* | 4 The field element shall return sensor and CCTV system operational status to the controlling center. | Planned |
| *Requirement:* | 5 The field element shall return sensor and CCTV system fault data to the controlling center for repair. | Planned |
| *Functional Area:* | **Roadway Signal Controls**<br>Field elements including traffic signal controllers for use at signalized intersections; also supports pedestrian crossings. | |
| *Requirement:* | 1 The field element shall control traffic signals at intersections and on main highways for urban and rural areas, under center control. | Existing |
| *Requirement:* | 2 The field element shall collect pedestrian images and pedestrian sensor data, and respond to pedestrian crossing requests via display, audio signal, or other manner. | Existing |

| Architecture | | Status |
|---|---|---|
| **Gulf Region ITS Architecture** | | |
| *Element:* **City of Biloxi TOC Roadside Equipment** | | |
| *Entity:* **Roadway Subsystem** | | |
| *Functional Area:* **Roadway Signal Controls**<br>Field elements including traffic signal controllers for use at signalized intersections; also supports pedestrian crossings. | | |
| *Requirement:* | 3 The field element shall provide the capability to notify the traffic management center that a pedestrian has requested right-of-way and when the request was or will be granted (request for right-of-way). | Planned |
| *Requirement:* | 4 The field element shall monitor operation of traffic signal controllers and report to the center any instances in which the indicator response does not match that expected from the indicator control information. | Planned |
| *Requirement:* | 5 The field element shall monitor operation of traffic signal controllers and report to the center any instances in which the indicator response does not match that expected from known indicator preemptions. | Planned |
| *Requirement:* | 6 The field element shall return traffic signal controller operational status to the controlling center. | Planned |
| *Requirement:* | 7 The field element shall return traffic signal controller fault data to the maintenance center for repair. | Planned |
| *Functional Area:* **Roadway Signal Priority**<br>Field elements that provide the capability to receive vehicle signal priority requests and control traffic signals accordingly. | | |
| *Requirement:* | 1 The field element shall respond to requests for indicator (e.g., signal) preemption requests from emergency vehicles at intersections, pedestrian crossings, and multimodal crossings. | Planned |
| *Requirement:* | 2 The field element shall respond to requests for indicator (e.g., signal) priority requests from transit vehicles at intersections, pedestrian crossings, and multimodal crossings. | Planned |
| *Requirement:* | 3 The field element shall notify controlling traffic management center and maintenance center that the signal timing has changed based on a signal preemption/priority request to help those centers determine whether a fault detected at the signal is a true malfunction or due to a signal override. | Planned |
| *Functional Area:* **Roadway Traffic Information Dissemination**<br>Driver information systems, such as dynamic message signs and Highway Advisory Radio (HAR). | | |
| *Requirement:* | 1 The field element shall include dynamic messages signs for dissemination of traffic and other information to drivers, under center control; the DMS may be either those that display variable text messages, or those that have fixed format display(s) (e.g. vehicle restrictions, or lane open/close). | Planned |
| *Requirement:* | 4 The field element shall provide operational status for the driver information systems equipment (DMS, HAR, etc.) to the center. | Planned |
| *Requirement:* | 5 The field element shall provide fault data for the driver information systems equipment (DMS, HAR, etc.) to the center for repair. | Planned |
| *Functional Area:* **Roadway Incident Detection** | | |

| Architecture | | Status |
|---|---|---|
| **Gulf Region ITS Architecture** | | |
| *Element:* **City of Biloxi TOC Roadside Equipment** | | |
| *Entity:* **Roadway Subsystem** | | |
| *Functional Area:* | **Roadway Incident Detection**<br>Field elements that monitor traffic conditions to identify incidents. It includes traffic detectors that collect traffic flow information and identify unusual traffic conditions and advanced CCTV cameras with built-in incident detection algorithms. | |
| *Requirement:* | 1 The field element shall collect, process, and send traffic images to the center for further analysis and distribution. | Planned |
| *Requirement:* | 3 The field element's video devices shall be remotely controlled by a traffic management center. | Planned |
| *Requirement:* | 4 The field element shall provide operational status and fault data for the incident detection devices to the traffic management center. | Planned |
| *Functional Area:* | **Standard Rail Crossing**<br>Field elements at highway-rail intersections (HRIs) where operational requirements do not dictate advanced features (e.g., where rail operational speeds are less than 80 miles per hour). Includes traditional HRI warning systems augmented with other standard traffic management devices. | |
| *Requirement:* | 1 The field element shall collect and process, traffic sensor data in the vicinity of a highway-rail intersection (HRI). | Existing |
| *Requirement:* | 2 The field element shall monitor the status of the highway-rail intersection (HRI) equipment, including both the current state and mode of operation and the current equipment condition, to be forwarded on to the traffic management center. | Existing |
| *Requirement:* | 3 The field element shall monitor the status of the highway-rail intersection (HRI) equipment, including both the current state and mode of operation and the current equipment condition, to be forwarded on to the rail wayside equipment. | Existing |
| *Requirement:* | 4 The field element shall receive track status from the rail wayside equipment that can be passed on to the traffic management center. This may include the current status of the tracks and whether a train is approaching. | Existing |
| *Requirement:* | 8 The field element shall support the integrated control of adjacent traffic signals to clear an area in advance of an approaching train and to manage traffic around the intersection. | Existing |
| *Functional Area:* | **Roadway Equipment Coordination**<br>Field elements that control and send data to other field elements (such as environmental sensors that send data to a DMS or coordination between traffic controllers on adjacent intersections), without center control. | |
| *Requirement:* | 1 The field element shall include sensors (such as traffic, environmental, and work zone intrusion detection sensors) that provide data and status information to other field element devices (such as dynamic message signs, ramp meters, traffic signals, work zone intrusion alert systems), without center | Existing |
| *Requirement:* | 2 The field element shall include sensors (such as traffic, environmental, and work zone intrusion detection sensors) that receive control information from other field element devices, without center control. | Existing |

| Architecture | | Status |
|---|---|---|
| **Gulf Region ITS Architecture** | | |
| *Element:* **City of Biloxi TOC Roadside Equipment** | | |
| *Entity:* **Roadway Subsystem** | | |
| *Functional Area:* | **Roadway Equipment Coordination**<br>Field elements that control and send data to other field elements (such as environmental sensors that send data to a DMS or coordination between traffic controllers on adjacent intersections), without center control. | |
| *Requirement:* | 3 The field element shall include devices (such as arterial or freeway controllers, roadway automated treatment systems, barrier and safeguard systems, emissions or pollution systems, and work zone intrusion alert systems) that provide data and status information to other field element devices (such as dynamic message signs, traffic controllers on adjacent intersections), without center control. | Existing |
| *Requirement:* | 4 The field element shall include devices (such as arterial or freeway controllers, roadway automated treatment systems, barrier and safeguard systems, emissions or pollution systems, and work zone intrusion alert systems) that receive control information from other field element devices, without center control. | Existing |
| *Functional Area:* | **Roadway Work Zone Traffic Control**<br>Field elements in maintenance and construction areas including CCTV cameras, driver information systems (such as DMS), and gates/barriers that monitor and control traffic and provide information directly to drivers in affected areas. | |
| *Requirement:* | 2 Under traffic and maintenance center control, the field element shall include driver information systems (such as dynamic messages signs and highway advisory radios) that advise drivers of activity around the work zone through which they are currently passing. | Planned |
| *Requirement:* | 5 The field element shall provide operational status for the surveillance (e.g. CCTV), driver information systems, and gates/barriers in work zones to the maintenance center. | Planned |
| *Requirement:* | 6 The field element shall provide fault data for the surveillance (e.g. CCTV), driver information systems, and gates/barriers in work zones to the maintenance center for repair. | Planned |
| *Functional Area:* | **Roadway Data Collection**<br>Field elements to collect traffic, road, and environmental conditions information for use in transportation planning, research, and other off-line applications. Includes the sensors, supporting roadside infrastructure, and communications equipment. | |
| *Requirement:* | 1 The field element shall collect traffic, road, and environmental conditions information. | Planned |
| *Requirement:* | 2 The field element shall include the sensors and supporting roadside devices that sense, collect, and send traffic, road, and environmental conditions information to a center for archival. | Planned |
| *Requirement:* | 3 The field element shall collect sensor status and sensor faults from roadside equipment and send it along with the recorded data to a center for archival. | Planned |
| *Element:* **City of Biloxi Website** | | |
| *Entity:* **Information Service Provider** | | |
| *Functional Area:* | **ISP Traveler Data Collection** | |

| Architecture | | | Status |
|---|---|---|---|
| **Gulf Region ITS Architecture** | | | |
| *Element:* **City of Biloxi Website** | | | |
| *Entity:* **Information Service Provider** | | | |
| *Functional Area:* | **ISP Traveler Data Collection**<br>Collects traveler information from other centers, consolidates and refines the collected data, and makes this data available to traveler information applications. | | |
| *Requirement:* | 1 | The center shall collect, process, and store traffic and highway condition information, including incident information, detours and road closures, event information, recommended routes, and current speeds on specific routes. | Existing |
| *Requirement:* | 2 | The center shall collect, process, and store maintenance and construction information, including scheduled maintenance and construction work activities and work zone activities. | Existing |
| *Requirement:* | 3 | The center shall collect, process, and store transit routes and schedules, transit transfer options, transit fares, and real-time schedule adherence information. | Existing |
| *Requirement:* | 4 | The center shall collect, process, and store parking information, including location, availability, and fees. | Existing |
| *Requirement:* | 6 | The center shall collect, process, and store weather information. | Existing |
| *Requirement:* | 7 | The center shall collect, process, and store event information. | Existing |
| *Functional Area:* | **Basic Information Broadcast**<br>Collection, processing, storage, and broadcast dissemination of traffic, transit, maintenance and construction, event, and weather information to traveler interface systems and vehicles. | | |
| *Requirement:* | 1 | The center shall collect, process, store, and disseminate traffic and highway condition information to travelers, including incident information, detours and road closures, event information, recommended routes, and current speeds on specific routes. | Existing |
| *Requirement:* | 2 | The center shall collect, process, store, and disseminate maintenance and construction information to travelers, including scheduled maintenance and construction work activities and work zone activities. | Existing |
| *Requirement:* | 3 | The center shall collect, process, store, and disseminate transit routes and schedules, transit transfer options, transit fares, and real-time schedule adherence information to travelers. | Existing |
| *Requirement:* | 4 | The center shall collect, process, store, and disseminate parking information to travelers, including location, availability, and | Existing |
| *Requirement:* | 6 | The center shall collect, process, store, and disseminate weather information to travelers. | Existing |
| *Requirement:* | 7 | The center shall collect, process, store, and disseminate event information to travelers. | Existing |
| *Requirement:* | 10 | The center shall provide the capability for a system operator to control the type and update frequency of broadcast traveler information. | Existing |
| *Element:* **City of Gulfport Database** | | | |
| *Entity:* **Archived Data Management Subsystem** | | | |
| *Functional Area:* | **ITS Data Repository** | | |

| Architecture | | | Status |
|---|---|---|---|
| **Gulf Region ITS Architecture** | | | |
| *Element:* **City of Gulfport Database** | | | |
| *Entity:* **Archived Data Management Subsystem** | | | |
| *Functional Area:* | **ITS Data Repository**<br>Collect and maintain data and data catalogs from one or more data sources. May include quality checks, error notification, and archive coordination. | | |
| *Requirement:* | 1 | The center shall collect data to be archived from one or more data sources. | Existing |
| *Requirement:* | 2 | The center shall collect data catalogs from one or more data sources. A catalog describes the data contained in the collection of archived data and may include descriptions of the schema or structure of the data, a description of the contents of the data; e.g., time range of entries, number of entries; or a sample of the data (e. g. a thumbnail). | Planned |
| *Requirement:* | 3 | The center shall store the archived data in a focused repository that is suited to a particular set of ITS data users. | Planned |
| *Requirement:* | 4 | The center shall include capabilities for performing quality checks on the incoming archived data. | Planned |
| *Requirement:* | 5 | The center shall include capabilities for error notification on the incoming archived data. | Planned |
| *Requirement:* | 6 | The center shall include capabilities for archive to archive coordination. | Planned |
| *Requirement:* | 8 | The center shall perform quality checks on received data. | Planned |
| *Requirement:* | 9 | The center shall provide the capability to execute methods on the incoming data such as cleansing, summarizations, aggregations, or transformations applied to the data before it is stored in the archive. | Planned |
| *Requirement:* | 10 | The center shall respond to requests from the administrator interface function to maintain the archive data. | Planned |
| *Requirement:* | 11 | When data or a catalog of data is received from the archive, the center shall generate the requested data product for the users systems. | Planned |
| *Requirement:* | 12 | For archive data requiring financial payment, the center shall process the financial requests and manage an interface to a Financial Institution. | Planned |
| *Functional Area:* | **Traffic and Roadside Data Archival**<br>Collects and archives traffic and environmental information directly from the roadside for use in off-line planning, research, and analysis. | | |
| *Requirement:* | 1 | The center shall manage the collection of archive data directly from collection equipment located at the roadside. | Existing |
| *Requirement:* | 2 | The center shall collect traffic sensor information from roadside devices. | Existing |
| *Requirement:* | 4 | The center shall respond to requests from the Archive Data Administer to input the parameters that control the collection process. | Existing |
| *Requirement:* | 5 | The center shall send the request for data and control parameters to the field equipment where the information is collected and returned. | Existing |
| *Requirement:* | 6 | The center shall record the status about the imported traffic and roadside data. | Existing |

| Architecture | | Status |
|---|---|---|
| **Gulf Region ITS Architecture** | | |
| *Element:* **City of Gulfport Database** | | |
| *Entity:* **Archived Data Management Subsystem** | | |
| *Functional Area:* **Traffic and Roadside Data Archival** Collects and archives traffic and environmental information directly from the roadside for use in off-line planning, research, and analysis. | | |
| *Requirement:* | 7 The center shall use the status information to adjust the collection of traffic and roadside data. | Existing |
| *Element:* **City of Gulfport Emergency Vehicles** | | |
| *Entity:* **Emergency Vehicle Subsystem** | | |
| *Functional Area:* **On-board EV En Route Support** On-board systems for gathering of dispatch and routing information for emergency vehicle personnel, vehicle tracking, communications with care facilities, and signal preemption via short range communication directly with traffic control equipment at the roadside. | | |
| *Requirement:* | 1 The emergency vehicle, including roadway service patrols, shall compute the location of the emergency vehicle based on inputs from a vehicle location determination function. | Planned |
| *Requirement:* | 2 The emergency vehicle, including roadway service patrols, shall send the vehicle's location and operational data to the center for emergency management and dispatch. | Planned |
| *Requirement:* | 3 The emergency vehicle, including roadway service patrols, shall receive incident details and a suggested route when dispatched to a scene. | Planned |
| *Requirement:* | 4 The emergency vehicle shall send the current en route status (including estimated time of arrival) and requests for emergency dispatch updates. | Planned |
| *Requirement:* | 5 The emergency vehicle shall send requests to traffic signal control equipment at the roadside to preempt the signal. | Existing |
| *Requirement:* | 6 The emergency vehicle shall provide the personnel on-board with dispatch information, including incident type and location, and forward an acknowledgment from personnel to the center that the vehicle is on its way to the incident scene. | Planned |
| *Functional Area:* **On-board EV Incident Management Communication** On-board systems provide communications support to first responders. Incident information is provided to dispatched emergency personnel. Emergency personnel transmit information about the incident and response status. | | |
| *Requirement:* | 1 The emergency vehicle shall receive dispatch instructions sufficient to enable emergency personnel in the field to implement an effective incident response. It includes local traffic, road, and weather conditions, hazardous material information, and the current status of resources that have been allocated to an incident. | Existing |
| *Requirement:* | 2 The emergency vehicle shall provide an interface to the center for emergency personnel to transmit information about the incident site such as the extent of injuries, identification of vehicles and people involved, hazardous material, etc. | Existing |

| Architecture | | Status |
|---|---|---|
| **Gulf Region ITS Architecture** | | |
| *Element:* **City of Gulfport Emergency Vehicles** | | |
| *Entity:* **Emergency Vehicle Subsystem** | | |
| *Functional Area:* | **On-board EV Incident Management Communication**<br>On-board systems provide communications support to first responders. Incident information is provided to dispatched emergency personnel. Emergency personnel transmit information about the incident and response status. | |
| *Requirement:* | 3 The emergency vehicle shall provide an interface to the center for emergency personnel to transmit information about the current incident response status such as the identification of the resources on site, site management strategies in effect, and current clearance status. | Existing |
| *Element:* **City of Gulfport Public Works** | | |
| *Entity:* **Maintenance and Construction Management** | | |
| *Functional Area:* | **MCM Vehicle and Equipment Maintenance Management**<br>Monitors vehicle and equipment condition, tracks maintenance history, and schedules routine and corrective maintenance. | |
| *Requirement:* | 1 The center shall collect and analyze vehicle diagnostics information from maintenance and construction vehicles. The information includes engine temperature, mileage, tire wear, brake wear, belt wear, and any warnings or alarms concerning the operational condition of the vehicle and ancillary equipment. | Existing |
| *Requirement:* | 2 The center shall exchange information with equipment repair facilities including status and history of repairs concerning maintenance and construction vehicles. This information includes vehicle status and diagnostic information, vehicle utilization, and coordination of when vehicles will be available for preventative and corrective maintenance. | Existing |
| *Requirement:* | 3 The center shall schedule preventive and corrective vehicle maintenance with the equipment repair facility based on fleet health reports, maintenance records, vehicle utilization and vehicle availability schedules. | Existing |
| *Functional Area:* | **MCM Work Zone Management**<br>Remotely monitors and supports work zone activities, controlling traffic through dynamic message signs (DMS), highway advisory radio, gates and barriers, and informing other groups of activity (e.g., traveler information systems, traffic management centers, other maintenance and construction centers). | |
| *Requirement:* | 3 The center shall disseminate work zone information to other agencies and centers including traffic, transit, emergency management centers, other maintenance centers, traveler information providers, and the media. | Planned |
| *Requirement:* | 4 The center shall control traffic in work zones by providing remote control of dynamic message signs, highway advisory radio systems, gates, and barriers located in or near the work zone. | Planned |

| Architecture | | Status |
|---|---|---|
| **Gulf Region ITS Architecture** | | |
| *Element:* **City of Gulfport Public Works** | | |
| *Entity:* **Maintenance and Construction Management** | | |
| *Functional Area:* | **MCM Work Zone Management**<br>Remotely monitors and supports work zone activities, controlling traffic through dynamic message signs (DMS), highway advisory radio, gates and barriers, and informing other groups of activity (e.g., traveler information systems, traffic management centers, other maintenance and construction centers). | |
| *Requirement:* | 5 The center shall exchange information with administrative systems to support the planning and scheduling of work zone activities. This information includes: equipment and consumables resupply purchase request status, personnel qualifications including training and special certifications, environmental regulations and rules that may impact maintenance activities, and requests and project requirements from contract administration. | Planned |
| *Functional Area:* | **MCM Speed Monitoring**<br>Remotely monitors vehicle speeds, and informs an enforcement agency if excessive speeds are detected; primarily used in work zones. | |
| *Requirement:* | 1 The center shall remotely control vehicle speed sensors typically placed in work zones; control parameters may include environmental and traffic conditions. | Existing |
| *Requirement:* | 2 The center shall collect operational status for the vehicle speed sensors; the status shall include logged information including measured speeds, warning messages displayed, and violation records. | Existing |
| *Requirement:* | 4 The center shall collect fault data for the vehicle speed sensors for repair. | Existing |
| *Functional Area:* | **MCM Work Activity Coordination**<br>Disseminates work activity schedules and current asset restrictions to other agencies. Work schedules are coordinated, factoring in the needs and activities of other agencies and adjacent jurisdictions. | |
| *Requirement:* | 1 The center shall provide work zone activities affecting the road network including the nature of the maintenance or construction activity, location, impact to the roadway, expected time(s) and duration of impact, anticipated delays, alternate routes, and suggested speed limits. This information may be augmented with<br>images that provide a visual indication of current work zone | Planned |
| *Requirement:* | 2 The center shall provide status information about scheduled maintenance and construction activities including anticipated closures and impact to the roadway, alternate routes, anticipated delays, closure times, and durations. The information is provided to other management centers such as traffic, emergency, transit, traveler information providers, other maintenance centers, multimodal transportation providers, rail operations, and the media. | Planned |
| *Requirement:* | 3 The center shall collect and respond to feedback concerning scheduled maintenance and construction activities with other management centers such as traffic, emergency, transit, and rail operations. | Planned |

| Architecture | | Status |
|---|---|---|
| **Gulf Region ITS Architecture** | | |
| *Element:* **City of Gulfport Public Works** | | |
| *Entity:* **Maintenance and Construction Management** | | |
| *Functional Area:* | **MCM Work Activity Coordination**<br>Disseminates work activity schedules and current asset restrictions to other agencies. Work schedules are coordinated, factoring in the needs and activities of other agencies and adjacent jurisdictions. | |
| *Requirement:* | 4 The center shall collect and disseminate asset restriction information levied on transportation asset usage based on infrastructure design, surveys, tests, or analyses. This includes standard facility design height, width, and weight restrictions, special restrictions such as spring weight restrictions, and temporary facility restrictions that are imposed during maintenance and construction. | Planned |
| *Requirement:* | 5 The center shall exchange information with administrative systems to support the planning and scheduling of maintenance and construction activities. This information includes: equipment and consumables resupply purchase request status, personnel qualifications including training and special certifications, environmental regulations and rules that may impact maintenance activities, and requests and project requirements from contract administration. | Planned |
| *Requirement:* | 6 The center shall exchange rail schedules and work plans with rail operations centers. | Planned |
| *Functional Area:* | **MCM Data Collection**<br>Collection and storage of maintenance and construction information. For use by operations personnel or data archives in the region. | |
| *Requirement:* | 1 The center shall collect maintenance and construction data (such as field equipment status, infrastructure status, maintenance and construction activity data) gathered from roadway, traffic, and other maintenance and construction sources. | Planned |
| *Requirement:* | 2 The center shall assign quality control metrics and meta-data to be stored along with the data. Meta-data may include attributes that describe the source and quality of the data and the conditions surrounding the collection of the data. | Planned |
| *Requirement:* | 3 The center shall receive and respond to requests from ITS Archives for either a catalog of the maintenance and construction data or for the data itself. | Planned |
| *Requirement:* | 4 The center shall be able to produce sample products of the data available. | Planned |
| *Requirement:* | 5 The center shall provide data to Asset Management to be used in updating the status of assets in the inventory. | Planned |
| *Element:* **City of Gulfport Public Works Field Devices** | | |
| *Entity:* **Roadway Subsystem** | | |
| *Functional Area:* | **Roadway Speed Monitoring**<br>Vehicle speed sensors that detect excessive vehicle speeds, informing drivers, centers and/or enforcement agencies of speed violations. | |
| *Requirement:* | 1 The field element shall include sensors to detect vehicle speeds, under traffic or maintenance center control. | Existing |

| Architecture | | Status |
|---|---|---|
| **Gulf Region ITS Architecture** | | |
| *Element:* **City of Gulfport Public Works Field Devices** | | |
| *Entity:* **Roadway Subsystem** | | |
| *Functional Area:* | **Roadway Speed Monitoring**<br>Vehicle speed sensors that detect excessive vehicle speeds, informing drivers, centers and/or enforcement agencies of speed violations. | |
| *Requirement:* | 6 The field element shall return operational status for the vehicle speed sensors to the controlling traffic or maintenance center; including measured speeds, warning messages displayed, and violation records. | Existing |
| *Requirement:* | 8 The field element shall return fault data for the vehicle speed sensors to the controlling center for repair. | Existing |
| *Functional Area:* | **Roadway Work Zone Traffic Control**<br>Field elements in maintenance and construction areas including CCTV cameras, driver information systems (such as DMS), and gates/barriers that monitor and control traffic and provide information directly to drivers in affected areas. | |
| *Requirement:* | 2 Under traffic and maintenance center control, the field element shall include driver information systems (such as dynamic messages signs and highway advisory radios) that advise drivers of activity around the work zone through which they are currently passing. | Planned |
| *Requirement:* | 5 The field element shall provide operational status for the surveillance (e.g. CCTV), driver information systems, and gates/barriers in work zones to the maintenance center. | Planned |
| *Requirement:* | 6 The field element shall provide fault data for the surveillance (e.g. CCTV), driver information systems, and gates/barriers in work zones to the maintenance center for repair. | Planned |
| *Element:* **City of Gulfport TOC** | | |
| *Entity:* **Traffic Management** | | |
| *Functional Area:* | **Collect Traffic Surveillance**<br>Management of traffic sensors and surveillance (CCTV) equipment, and distribution of the collected information to other centers and operators. | |
| *Requirement:* | 1 The center shall monitor, analyze, and store traffic sensor data (speed, volume, occupancy) collected from field elements under remote control of the center. | Existing |
| *Requirement:* | 2 The center shall monitor, analyze, and distribute traffic images from CCTV systems under remote control of the center. | Planned |
| *Requirement:* | 4 The center shall distribute road network conditions data (raw or processed) based on collected and analyzed traffic sensor and surveillance data to other centers. | Planned |
| *Requirement:* | 5 The center shall respond to control data from center personnel regarding sensor and surveillance data collection, analysis, storage, and distribution. | Existing |
| *Requirement:* | 6 The center shall maintain a database of surveillance and sensors and the freeways, surface street and rural roadways, e.g. where they are located, to which part(s) of the network their data applies, the type of data, and the ownership of each link (that is, the agency or entity responsible for collecting and storing surveillance of the link) in the network. | Planned |

| Architecture | | Status |
|---|---|---|
| **Gulf Region ITS Architecture** | | |
| *Element:* **City of Gulfport TOC** | | |
| *Entity:* **Traffic Management** | | |
| *Functional Area:* | **Collect Traffic Surveillance**<br>Management of traffic sensors and surveillance (CCTV) equipment, and distribution of the collected information to other centers and operators. | |
| *Requirement:* | 7 The center shall support an interface with a map update provider, or other appropriate data sources, through which updates of digitized map data can be obtained and used as a background for traffic data. | Planned |
| *Functional Area:* | **TMC Signal Control**<br>Remotely controls traffic signal controllers to implement traffic management strategies at signalized intersections based on traffic conditions, incidents, emergency vehicle preemptions, pedestrian crossings, etc. | |
| *Requirement:* | 1 The center shall remotely control traffic signal controllers. | Existing |
| *Requirement:* | 2 The center shall accept notifications of right-of-way requests from pedestrians. | Existing |
| *Requirement:* | 3 The center shall collect traffic signal controller operational status and compare against the control information sent by the center. | Existing |
| *Requirement:* | 4 The center shall collect traffic signal controller fault data from the field. | Existing |
| *Requirement:* | 5 The center shall implement control plans to coordinate signalized intersections, under control of center personnel, based on data from sensors and surveillance monitoring traffic conditions, incidents, emergency vehicle preemptions, the passage of commercial vehicles with unusual loads, equipment faults, pedestrian crossings, etc. | Existing |
| *Functional Area:* | **TMC Traffic Information Dissemination**<br>Controls dissemination of traffic-related data to other centers, the media, and travelers via the driver information systems (DMS, HAR) that it operates. | |
| *Requirement:* | 1 The center shall remotely control dynamic messages signs for dissemination of traffic and other information to drivers. | Planned |
| *Requirement:* | 3 The center shall collect operational status for the driver information systems equipment (DMS, HAR, etc.). | Planned |
| *Requirement:* | 4 The center shall collect fault data for the driver information systems equipment (DMS, HAR, etc.) for repair. | Planned |
| *Requirement:* | 5 The center shall retrieve locally stored traffic information, including current and forecasted traffic information, road and weather conditions, traffic incident information, information on diversions and alternate routes, closures, and special traffic restrictions (lane/shoulder use, weight restrictions, width restrictions, HOV requirements), etc. | Planned |
| *Requirement:* | 8 The center shall provide the capability for center personnel to control the nature of the data that is available to non-traffic operations centers and the media. | Planned |
| *Functional Area:* | **TMC Regional Traffic Control**<br>Coordination between traffic management centers in order to share traffic information between centers as well as control of traffic management field equipment. This may be used during incidents and special events and during day-to-day operations. | |

| Architecture | | Status |
|---|---|---|
| **Gulf Region ITS Architecture** | | |
| *Element:* **City of Gulfport TOC** | | |
| *Entity:* **Traffic Management** | | |
| *Functional Area:* | **TMC Regional Traffic Control**<br>Coordination between traffic management centers in order to share traffic information between centers as well as control of traffic management field equipment. This may be used during incidents and special events and during day-to-day operations. | |
| *Requirement:* | 1 The center shall exchange traffic information with other traffic management centers, includes incident information, congestion data, traffic data, signal timing plans, and real-time signal control information. | Planned |
| *Requirement:* | 2 The center shall exchange traffic control information with other traffic management centers, includes remote monitoring and control of traffic management devices (e.g. signs, sensors, signals, cameras, etc.). | Planned |
| *Functional Area:* | **TMC Incident Detection**<br>Remotely controls traffic and video sensors to support incident detection and verification; exchange information with other agencies including emergency management, maintenance and construction, alerting and advisory systems, event promoters, intermodal freight depots, and traveler information systems. | |
| *Requirement:* | 1 The center shall receive inputs from the Alerting and Advisory System concerning the possibility or occurrence of severe weather, terrorist activity, or other major emergency, including information provided by the Emergency Alert System. | Existing |
| *Requirement:* | 2 The center shall collect and store traffic flow and image data from the field equipment to detect and verify incidents. | Planned |
| *Requirement:* | 3 The center shall receive inputs concerning upcoming events that would effect the traffic network from event promoters, traveler information service providers, and intermodal freight depots. | Existing |
| *Requirement:* | 4 The center shall exchange incident and threat information with emergency management centers as well as maintenance and construction centers; including notification of existence of incident and expected severity, location, time and nature of incident. | Planned |
| *Requirement:* | 6 The center shall provide road network conditions and traffic images to emergency management centers to support the detection, verification, and classification of incidents. | Planned |
| *Requirement:* | 7 The center shall provide video and traffic sensor control commands to the field equipment to detect and verify incidents. | Planned |
| *Functional Area:* | **TMC Incident Dispatch Coordination/Communication**<br>Center-based capability to formulate an incident response that takes into account the incident potential, incident impacts, and/or resources required for incident management including proposing and facilitating the dispatch of emergency response and service vehicles as well as coordinating response with all appropriate cooperating agencies. | |

| Architecture | | Status |
|---|---|---|
| **Gulf Region ITS Architecture** | | |
| *Element:* **City of Gulfport TOC** | | |
| *Entity:* **Traffic Management** | | |
| *Functional Area:* | **TMC Incident Dispatch Coordination/Communication**<br>Center-based capability to formulate an incident response that takes into account the incident potential, incident impacts, and/or resources required for incident management including proposing and facilitating the dispatch of emergency response and service vehicles as well as coordinating response with all appropriate cooperating agencies. | |
| *Requirement:* | 1 The center shall exchange alert information and status with emergency management centers. The information includes notification of a major emergency such as a natural or man-made disaster, civil emergency, or child abduction for distribution to the public. The information may include the alert originator, the nature of the emergency, the geographic area affected by the emergency, the effective time period, and information and instructions necessary for the public to respond to the alert. This may also identify specific information that should not be released to the public. | Existing |
| *Requirement:* | 2 The center shall coordinate planning for incidents with emergency management centers - including pre-planning activities for disaster response, evacuation, and recovery operations. | Existing |
| *Requirement:* | 3 The center shall support requests from emergency management centers to remotely control sensor and surveillance equipment located in the field, provide special routing for emergency vehicles, and to provide responding emergency vehicles with signal preemption. | Planned |
| *Requirement:* | 4 The center shall exchange incident and threat information with emergency management centers as well as maintenance and construction centers; including notification of existence of incident and expected severity, location, time and nature of incident. | Planned |
| *Requirement:* | 5 The center shall respond to requests from emergency management to provide traffic management resources to implement special traffic control measures, assist in clean up, verify an incident, etc. This may also involve coordination with maintenance centers. | Existing |
| *Requirement:* | 6 The center shall receive inputs concerning upcoming events that would effect the traffic network from event promoters, traveler information service providers, media, and rail operations centers. | Existing |
| *Requirement:* | 7 The center shall provide road network conditions and traffic images to emergency management centers, maintenance and construction centers, and traveler information service providers. | Planned |
| *Requirement:* | 8 The center shall exchange road network status assessment information with emergency management and maintenance centers including an assessment of damage sustained by the road network including location and extent of the damage, estimate of remaining capacity, required closures, alternate routes, necessary restrictions, and time frame for repair and recovery. | Planned |
| *Requirement:* | 9 The center shall coordinate information and controls with other traffic management centers. | Planned |

| Architecture | | Status |
|---|---|---|
| **Gulf Region ITS Architecture** | | |
| *Element:* **City of Gulfport TOC** | | |
| *Entity:* **Traffic Management** | | |
| *Functional Area:* | **TMC Incident Dispatch Coordination/Communication**<br>Center-based capability to formulate an incident response that takes into account the incident potential, incident impacts, and/or resources required for incident management including proposing and facilitating the dispatch of emergency response and service vehicles as well as coordinating response with all appropriate cooperating agencies. | |
| *Requirement:* | 11 The center shall support an interface with a map update provider, or other appropriate data sources, through which updates of digitized map data can be obtained and used as a background for traffic incident management. | Planned |
| *Functional Area:* | **TMC Evacuation Support**<br>Development, coordination, and execution of special traffic management strategies during evacuation and subsequent reentry of a population in the vicinity of a disaster or major emergency. Interfaces with emergency management and other traffic management centers. | |
| *Requirement:* | 1 The center shall coordinate planning for evacuation with emergency management centers - including pre-planning activities such as establishing routes, areas to be evacuated, timing, etc. | Existing |
| *Requirement:* | 2 The center shall support requests from emergency management centers to preempt the current traffic control strategy, activate traffic control and closure systems such as gates and barriers, activate safeguard systems, or use driver information systems to support evacuation traffic control plans. | Existing |
| *Requirement:* | 3 The center shall coordinate information and controls with other traffic management centers. | Existing |
| *Requirement:* | 4 The center shall coordinate execution of evacuation strategies with emergency management centers - including activities such as setting closures and detours, establishing routes, updating areas to be evacuated, timing the process, etc. | Existing |
| *Functional Area:* | **HRI Traffic Management**<br>Remotely monitor and control highway-rail intersection (HRI) equipment, includes standard speed active warning systems and high speed systems which provide additional information on approaching trains and detect and report on obstructions in the HRI. | |
| *Requirement:* | 1 The center shall remotely control highway-rail intersection (HRI) equipment located in the field. | Existing |
| *Requirement:* | 2 The center shall accept collect highway-rail intersection (HRI) advisory or alert data from rail operations centers. | Existing |
| *Requirement:* | 3 The center shall collect highway-rail intersection (HRI) equipment operational status and compare against the control information sent by the center. | Existing |
| *Requirement:* | 4 The center shall provide the highway-rail intersection (HRI) equipment operational status to rail operations centers. | Existing |
| *Requirement:* | 5 The center shall collect incident information related to a highway-rail intersection (HRI), such as intersection blockages or crashes or equipment malfunctions. | Existing |

| Architecture | | Status |
|---|---|---|
| **Gulf Region ITS Architecture** | | |
| *Element:* **City of Gulfport TOC** | | |
| *Entity:* **Traffic Management** | | |
| *Functional Area:* | **HRI Traffic Management**<br>Remotely monitor and control highway-rail intersection (HRI) equipment, includes standard speed active warning systems and high speed systems which provide additional information on approaching trains and detect and report on obstructions in the HRI. | |
| *Requirement:* | 6 The center shall implement control plans to coordinate signalized intersections around highway-rail intersections (HRI), under control of center personnel, based on data from sensors and surveillance monitoring traffic conditions, incidents, equipment faults, pedestrian crossings, etc. | Planned |
| *Functional Area:* | **Traffic Maintenance**<br>Monitoring and remote diagnostics of field equipment - detect failures, issue problem reports, and track the repair or replacement of the failed equipment. | |
| *Requirement:* | 1 The center shall collect and store sensor (traffic, pedestrian, multimodal crossing) operational status. | Existing |
| *Requirement:* | 2 The center shall collect and store CCTV surveillance system (traffic, pedestrian) operational status. | Planned |
| *Requirement:* | 3 The center shall collect and store sensor (traffic, pedestrian, multimodal crossing) fault data and send to the maintenance center for repair. | Existing |
| *Requirement:* | 4 The center shall collect and store CCTV surveillance system (traffic, pedestrian) fault data send to the maintenance center for repair. | Planned |
| *Requirement:* | 7 The center shall exchange data with maintenance centers concerning the reporting of faulty equipment and the schedule/status of their repair. Information exchanged includes details of new equipment faults, and clearances when the faults are cleared. | Existing |
| *Requirement:* | 8 The center shall support an interface with a map update provider, or other appropriate data sources, through which updates of digitized map data can be obtained and used as a background for traffic maintenance data. | Existing |
| *Functional Area:* | **TMC Work Zone Traffic Management**<br>Coordination with maintenance systems using work zone images and traveler information systems (such as DMS), and distribution of work plans so that work zones are established that have minimum traffic impact. | |
| *Requirement:* | 3 The center shall remotely control driver information systems (such as dynamic messages signs, highway advisory radios) to advise drivers of activity around a work zone. | Planned |
| *Requirement:* | 4 The center shall collect operational status for the driver information systems equipment in work zones. | Planned |
| *Requirement:* | 5 The center shall collect fault data for the driver information systems equipment in work zones for repair. | Planned |
| *Functional Area:* | **TMC Multimodal Coordination**<br>Provides traffic signal priority for transit vehicles based on center-to-center communications with the transit management center; also exchange traffic and transit information. | |

| Architecture | | Status |
|---|---|---|
| **Gulf Region ITS Architecture** | | |
| *Element:* **City of Gulfport TOC** | | |
| *Entity:* **Traffic Management** | | |
| *Functional Area:* **TMC Multimodal Coordination** Provides traffic signal priority for transit vehicles based on center-to-center communications with the transit management center; also exchange traffic and transit information. | | |
| *Requirement:* | 1 The center shall respond to requests from transit management centers for signal priority at one or more intersections along a particular transit route. | Planned |
| *Requirement:* | 2 The center shall exchange information with transit management centers including details current transit routes, the level of service on each route, and the progress of individual vehicles along their routes. | Planned |
| *Functional Area:* **Traffic Data Collection** Collection and storage of traffic management data. For use by operations personnel or data archives in the region. | | |
| *Requirement:* | 1 The center shall collect traffic management data such as operational data, event logs, etc. | Existing |
| *Requirement:* | 2 The center shall assign quality control metrics and meta-data to be stored along with the data. Meta-data may include attributes that describe the source and quality of the data and the conditions surrounding the collection of the data. | Planned |
| *Requirement:* | 3 The center shall receive and respond to requests from ITS Archives for either a catalog of the traffic data or for the data itself. | Planned |
| *Requirement:* | 4 The center shall be able to produce sample products of the data available. | Planned |
| *Element:* **City of Gulfport TOC Roadside Equipment** | | |
| *Entity:* **Roadway Subsystem** | | |
| *Functional Area:* **Roadway Basic Surveillance** Field elements that monitor traffic conditions using loop detectors and CCTV cameras. | | |
| *Requirement:* | 1 The field element shall collect, process, digitize, and send traffic sensor data (speed, volume, and occupancy) to the center for further analysis and storage, under center control. | Existing |
| *Requirement:* | 2 The field element shall collect, process, and send traffic images to the center for further analysis and distribution. | Planned |
| *Requirement:* | 4 The field element shall return sensor and CCTV system operational status to the controlling center. | Existing |
| *Requirement:* | 5 The field element shall return sensor and CCTV system fault data to the controlling center for repair. | Existing |
| *Functional Area:* **Roadway Signal Controls** Field elements including traffic signal controllers for use at signalized intersections; also supports pedestrian crossings. | | |
| *Requirement:* | 1 The field element shall control traffic signals at intersections and on main highways for urban and rural areas, under center control. | Existing |
| *Requirement:* | 2 The field element shall collect pedestrian images and pedestrian sensor data, and respond to pedestrian crossing requests via display, audio signal, or other manner. | Existing |

| Architecture | | Status |
|---|---|---|
| **Gulf Region ITS Architecture** | | |
| *Element:* **City of Gulfport TOC Roadside Equipment** | | |
| *Entity:* **Roadway Subsystem** | | |
| *Functional Area:* **Roadway Signal Controls** Field elements including traffic signal controllers for use at signalized intersections; also supports pedestrian crossings. | | |
| *Requirement:* | 3 The field element shall provide the capability to notify the traffic management center that a pedestrian has requested right-of-way and when the request was or will be granted (request for right-of-way). | Existing |
| *Requirement:* | 4 The field element shall monitor operation of traffic signal controllers and report to the center any instances in which the indicator response does not match that expected from the indicator control information. | Existing |
| *Requirement:* | 5 The field element shall monitor operation of traffic signal controllers and report to the center any instances in which the indicator response does not match that expected from known indicator preemptions. | Existing |
| *Requirement:* | 6 The field element shall return traffic signal controller operational status to the controlling center. | Existing |
| *Requirement:* | 7 The field element shall return traffic signal controller fault data to the maintenance center for repair. | Existing |
| *Functional Area:* **Roadway Signal Priority** Field elements that provide the capability to receive vehicle signal priority requests and control traffic signals accordingly. | | |
| *Requirement:* | 1 The field element shall respond to requests for indicator (e.g., signal) preemption requests from emergency vehicles at intersections, pedestrian crossings, and multimodal crossings. | Existing |
| *Requirement:* | 2 The field element shall respond to requests for indicator (e.g., signal) priority requests from transit vehicles at intersections, pedestrian crossings, and multimodal crossings. | Planned |
| *Requirement:* | 3 The field element shall notify controlling traffic management center and maintenance center that the signal timing has changed based on a signal preemption/priority request to help those centers determine whether a fault detected at the signal is a true malfunction or due to a signal override. | Existing |
| *Functional Area:* **Roadway Traffic Information Dissemination** Driver information systems, such as dynamic message signs and Highway Advisory Radio (HAR). | | |
| *Requirement:* | 1 The field element shall include dynamic messages signs for dissemination of traffic and other information to drivers, under center control; the DMS may be either those that display variable text messages, or those that have fixed format display(s) (e.g. vehicle restrictions, or lane open/close). | Planned |
| *Requirement:* | 4 The field element shall provide operational status for the driver information systems equipment (DMS, HAR, etc.) to the center. | Planned |
| *Requirement:* | 5 The field element shall provide fault data for the driver information systems equipment (DMS, HAR, etc.) to the center for repair. | Planned |
| *Functional Area:* **Roadway Incident Detection** | | |

| Architecture | | Status |
|---|---|---|
| **Gulf Region ITS Architecture** | | |
| *Element:* **City of Gulfport TOC Roadside Equipment** | | |
| *Entity:* **Roadway Subsystem** | | |
| *Functional Area:* | **Roadway Incident Detection**<br>Field elements that monitor traffic conditions to identify incidents. It includes traffic detectors that collect traffic flow information and identify unusual traffic conditions and advanced CCTV cameras with built-in incident detection algorithms. | |
| *Requirement:* | 1 The field element shall collect, process, and send traffic images to the center for further analysis and distribution. | Planned |
| *Requirement:* | 3 The field element's video devices shall be remotely controlled by a traffic management center. | Planned |
| *Requirement:* | 4 The field element shall provide operational status and fault data for the incident detection devices to the traffic management center. | Planned |
| *Functional Area:* | **Standard Rail Crossing**<br>Field elements at highway-rail intersections (HRIs) where operational requirements do not dictate advanced features (e.g., where rail operational speeds are less than 80 miles per hour). Includes traditional HRI warning systems augmented with other standard traffic management devices. | |
| *Requirement:* | 1 The field element shall collect and process, traffic sensor data in the vicinity of a highway-rail intersection (HRI). | Existing |
| *Requirement:* | 2 The field element shall monitor the status of the highway-rail intersection (HRI) equipment, including both the current state and mode of operation and the current equipment condition, to be forwarded on to the traffic management center. | Existing |
| *Requirement:* | 3 The field element shall monitor the status of the highway-rail intersection (HRI) equipment, including both the current state and mode of operation and the current equipment condition, to be forwarded on to the rail wayside equipment. | Existing |
| *Requirement:* | 4 The field element shall receive track status from the rail wayside equipment that can be passed on to the traffic management center. This may include the current status of the tracks and whether a train is approaching. | Existing |
| *Requirement:* | 8 The field element shall support the integrated control of adjacent traffic signals to clear an area in advance of an approaching train and to manage traffic around the intersection. | Existing |
| *Functional Area:* | **Roadway Equipment Coordination**<br>Field elements that control and send data to other field elements (such as environmental sensors that send data to a DMS or coordination between traffic controllers on adjacent intersections), without center control. | |
| *Requirement:* | 1 The field element shall include sensors (such as traffic, environmental, and work zone intrusion detection sensors) that provide data and status information to other field element devices (such as dynamic message signs, ramp meters, traffic signals, work zone intrusion alert systems), without center control. | Existing |
| *Requirement:* | 2 The field element shall include sensors (such as traffic, environmental, and work zone intrusion detection sensors) that receive control information from other field element devices, without center control. | Existing |

| Architecture | | Status |
|---|---|---|
| **Gulf Region ITS Architecture** | | |
| *Element:* **City of Gulfport TOC Roadside Equipment** | | |
| *Entity:* **Roadway Subsystem** | | |
| *Functional Area:* **Roadway Equipment Coordination** Field elements that control and send data to other field elements (such as environmental sensors that send data to a DMS or coordination between traffic controllers on adjacent intersections), without center control. | | |
| *Requirement:* | 3 The field element shall include devices (such as arterial or freeway controllers, roadway automated treatment systems, barrier and safeguard systems, emissions or pollution systems, and work zone intrusion alert systems) that provide data and status information to other field element devices (such as dynamic message signs, traffic controllers on adjacent intersections), without center control. | Existing |
| *Requirement:* | 4 The field element shall include devices (such as arterial or freeway controllers, roadway automated treatment systems, barrier and safeguard systems, emissions or pollution systems, and work zone intrusion alert systems) that receive control information from other field element devices, without center control. | Existing |
| *Functional Area:* **Roadway Data Collection** Field elements to collect traffic, road, and environmental conditions information for use in transportation planning, research, and other off-line applications. Includes the sensors, supporting roadside infrastructure, and communications equipment. | | |
| *Requirement:* | 1 The field element shall collect traffic, road, and environmental conditions information. | Existing |
| *Requirement:* | 2 The field element shall include the sensors and supporting roadside devices that sense, collect, and send traffic, road, and environmental conditions information to a center for archival. | Existing |
| *Requirement:* | 3 The field element shall collect sensor status and sensor faults from roadside equipment and send it along with the recorded data to a center for archival. | Existing |
| *Element:* **City of Pascagoula Database** | | |
| *Entity:* **Archived Data Management Subsystem** | | |
| *Functional Area:* **ITS Data Repository** Collect and maintain data and data catalogs from one or more data sources. May include quality checks, error notification, and archive coordination. | | |
| *Requirement:* | 1 The center shall collect data to be archived from one or more data sources. | Existing |
| *Requirement:* | 2 The center shall collect data catalogs from one or more data sources. A catalog describes the data contained in the collection of archived data and may include descriptions of the schema or structure of the data, a description of the contents of the data; e.g., time range of entries, number of entries; or a sample of the data (e. g. a thumbnail). | Planned |
| *Requirement:* | 3 The center shall store the archived data in a focused repository that is suited to a particular set of ITS data users. | Planned |
| *Requirement:* | 4 The center shall include capabilities for performing quality checks on the incoming archived data. | Planned |
| *Requirement:* | 5 The center shall include capabilities for error notification on the incoming archived data. | Planned |

| Architecture | | Status |
|---|---|---|
| **Gulf Region ITS Architecture** | | |
| *Element:* **City of Pascagoula Database** | | |
| *Entity:* **Archived Data Management Subsystem** | | |
| *Functional Area:* **ITS Data Repository** Collect and maintain data and data catalogs from one or more data sources. May include quality checks, error notification, and archive coordination. | | |
| *Requirement:* | 6 The center shall include capabilities for archive to archive coordination. | Planned |
| *Requirement:* | 8 The center shall perform quality checks on received data. | Planned |
| *Requirement:* | 9 The center shall provide the capability to execute methods on the incoming data such as cleansing, summarizations, aggregations, or transformations applied to the data before it is stored in the archive. | Planned |
| *Requirement:* | 10 The center shall respond to requests from the administrator interface function to maintain the archive data. | Planned |
| *Requirement:* | 11 When data or a catalog of data is received from the archive, the center shall generate the requested data product for the users systems. | Planned |
| *Requirement:* | 12 For archive data requiring financial payment, the center shall process the financial requests and manage an interface to a Financial Institution. | Planned |
| *Element:* **City of Pascagoula Emergency Vehicles** | | |
| *Entity:* **Emergency Vehicle Subsystem** | | |
| *Functional Area:* **On-board EV En Route Support** On-board systems for gathering of dispatch and routing information for emergency vehicle personnel, vehicle tracking, communications with care facilities, and signal preemption via short range communication directly with traffic control equipment at the roadside. | | |
| *Requirement:* | 1 The emergency vehicle, including roadway service patrols, shall compute the location of the emergency vehicle based on inputs from a vehicle location determination function. | Planned |
| *Requirement:* | 2 The emergency vehicle, including roadway service patrols, shall send the vehicle's location and operational data to the center for emergency management and dispatch. | Planned |
| *Requirement:* | 3 The emergency vehicle, including roadway service patrols, shall receive incident details and a suggested route when dispatched to a scene. | Planned |
| *Requirement:* | 4 The emergency vehicle shall send the current en route status (including estimated time of arrival) and requests for emergency dispatch updates. | Planned |
| *Requirement:* | 5 The emergency vehicle shall send requests to traffic signal control equipment at the roadside to preempt the signal. | Planned |
| *Requirement:* | 6 The emergency vehicle shall provide the personnel on-board with dispatch information, including incident type and location, and forward an acknowledgment from personnel to the center that the vehicle is on its way to the incident scene. | Planned |
| *Requirement:* | 7 The emergency vehicle shall send patient status information to the care facility along with a request for further information. | Planned |

| Architecture | | Status |
|---|---|---|
| **Gulf Region ITS Architecture** | | |
| *Element:* **City of Pascagoula Emergency Vehicles** | | |
| *Entity:* **Emergency Vehicle Subsystem** | | |
| *Functional Area:* | **On-board EV En Route Support**<br>On-board systems for gathering of dispatch and routing information for emergency vehicle personnel, vehicle tracking, communications with care facilities, and signal preemption via short range communication directly with traffic control equipment at the roadside. | |
| *Requirement:* | 8 The emergency vehicle shall forward care facility status information to emergency vehicle personnel, including the location, specialized services, quality of care, waiting time, number of rooms available, and emergency room status of hospitals or emergency care providers. | Planned |
| *Functional Area:* | **On-board EV Incident Management Communication**<br>On-board systems provide communications support to first responders. Incident information is provided to dispatched emergency personnel. Emergency personnel transmit information about the incident and response status. | |
| *Requirement:* | 1 The emergency vehicle shall receive dispatch instructions sufficient to enable emergency personnel in the field to implement an effective incident response. It includes local traffic, road, and weather conditions, hazardous material information, and the current status of resources that have been allocated to an incident. | Existing |
| *Requirement:* | 2 The emergency vehicle shall provide an interface to the center for emergency personnel to transmit information about the incident site such as the extent of injuries, identification of vehicles and people involved, hazardous material, etc. | Existing |
| *Requirement:* | 3 The emergency vehicle shall provide an interface to the center for emergency personnel to transmit information about the current incident response status such as the identification of the resources on site, site management strategies in effect, and current clearance status. | Existing |
| *Element:* **City of Pascagoula Parking Management** | | |
| *Entity:* **Parking Management** | | |
| *Functional Area:* | **Parking Management**<br>Monitor vehicles and current parking availability within parking facilities. Use driver information systems (e.g., DMS) to provide parking availability and other parking facility information to drivers. Support local traffic control coordination around the parking facility. | |
| *Requirement:* | 1 The parking element shall maintain parking lot information including static information such as hours of operation, rates, location, entrance locations, capacity, type, and constraints; as well as dynamic information such as current state of the lot, occupancy, arrival rates, and departure rates. | Planned |
| *Requirement:* | 2 The parking element shall share information with a traffic management center to identify queues at entrances, exits that should be used, and other information that supports coordinated local traffic control in and around the parking facility. | Planned |
| *Requirement:* | 3 The parking element shall manage local dynamic message signs that display messages to travelers such as the parking lot state, number of spaces available, location of entrances, and current charges. | Planned |

| Architecture | | Status |
|---|---|---|
| **Gulf Region ITS Architecture** | | |
| *Element:* **City of Pascagoula Public Works** | | |
| *Entity:* **Maintenance and Construction Management** | | |
| *Functional Area:* | **MCM Work Zone Management**<br>Remotely monitors and supports work zone activities, controlling traffic through dynamic message signs (DMS), highway advisory radio, gates and barriers, and informing other groups of activity (e.g., traveler information systems, traffic management centers, other maintenance and construction centers). | |
| *Requirement:* | 3 The center shall disseminate work zone information to other agencies and centers including traffic, transit, emergency management centers, other maintenance centers, traveler information providers, and the media. | Planned |
| *Requirement:* | 4 The center shall control traffic in work zones by providing remote control of dynamic message signs, highway advisory radio systems, gates, and barriers located in or near the work zone. | Existing |
| *Requirement:* | 5 The center shall exchange information with administrative systems to support the planning and scheduling of work zone activities. This information includes: equipment and consumables resupply purchase request status, personnel qualifications including training and special certifications, environmental regulations and rules that may impact maintenance activities, and requests and project requirements from contract administration. | Planned |
| *Functional Area:* | **MCM Work Activity Coordination**<br>Disseminates work activity schedules and current asset restrictions to other agencies. Work schedules are coordinated, factoring in the needs and activities of other agencies and adjacent jurisdictions. | |
| *Requirement:* | 1 The center shall provide work zone activities affecting the road network including the nature of the maintenance or construction activity, location, impact to the roadway, expected time(s) and duration of impact, anticipated delays, alternate routes, and suggested speed limits. This information may be augmented with<br>images that provide a visual indication of current work zone | Planned |
| *Requirement:* | 2 The center shall provide status information about scheduled maintenance and construction activities including anticipated closures and impact to the roadway, alternate routes, anticipated delays, closure times, and durations. The information is provided to other management centers such as traffic, emergency, transit, traveler information providers, other maintenance centers, multimodal transportation providers, rail operations, and the media. | Planned |
| *Requirement:* | 3 The center shall collect and respond to feedback concerning scheduled maintenance and construction activities with other management centers such as traffic, emergency, transit, and rail operations. | Planned |

| Architecture | | Status |
|---|---|---|
| **Gulf Region ITS Architecture** | | |
| *Element:* **City of Pascagoula Public Works** | | |
| *Entity:* **Maintenance and Construction Management** | | |
| *Functional Area:* | **MCM Work Activity Coordination**<br>Disseminates work activity schedules and current asset restrictions to other agencies. Work schedules are coordinated, factoring in the needs and activities of other agencies and adjacent jurisdictions. | |
| *Requirement:* | 4 The center shall collect and disseminate asset restriction information levied on transportation asset usage based on infrastructure design, surveys, tests, or analyses. This includes standard facility design height, width, and weight restrictions, special restrictions such as spring weight restrictions, and temporary facility restrictions that are imposed during maintenance and construction. | Planned |
| *Requirement:* | 5 The center shall exchange information with administrative systems to support the planning and scheduling of maintenance and construction activities. This information includes: equipment and consumables resupply purchase request status, personnel qualifications including training and special certifications, environmental regulations and rules that may impact maintenance activities, and requests and project requirements from contract administration. | Planned |
| *Requirement:* | 6 The center shall exchange rail schedules and work plans with rail operations centers. | Planned |
| *Functional Area:* | **MCM Data Collection**<br>Collection and storage of maintenance and construction information. For use by operations personnel or data archives in the region. | |
| *Requirement:* | 1 The center shall collect maintenance and construction data (such as field equipment status, infrastructure status, maintenance and construction activity data) gathered from roadway, traffic, and other maintenance and construction sources. | Planned |
| *Requirement:* | 2 The center shall assign quality control metrics and meta-data to be stored along with the data. Meta-data may include attributes that describe the source and quality of the data and the conditions surrounding the collection of the data. | Planned |
| *Requirement:* | 3 The center shall receive and respond to requests from ITS Archives for either a catalog of the maintenance and construction data or for the data itself. | Planned |
| *Requirement:* | 4 The center shall be able to produce sample products of the data available. | Planned |
| *Requirement:* | 5 The center shall provide data to Asset Management to be used in updating the status of assets in the inventory. | Planned |
| *Element:* **City of Pascagoula TOC** | | |
| *Entity:* **Traffic Management** | | |
| *Functional Area:* | **TMC Signal Control**<br>Remotely controls traffic signal controllers to implement traffic management strategies at signalized intersections based on traffic conditions, incidents, emergency vehicle preemptions, pedestrian crossings, etc. | |
| *Requirement:* | 1 The center shall remotely control traffic signal controllers. | Existing |
| *Requirement:* | 2 The center shall accept notifications of right-of-way requests from pedestrians. | Existing |

| Architecture | | Status |
|---|---|---|
| **Gulf Region ITS Architecture** | | |
| *Element:* **City of Pascagoula TOC** | | |
| *Entity:* **Traffic Management** | | |
| *Functional Area:* **TMC Signal Control**<br>Remotely controls traffic signal controllers to implement traffic management strategies at signalized intersections based on traffic conditions, incidents, emergency vehicle preemptions, pedestrian crossings, etc. | | |
| *Requirement:* | 3 The center shall collect traffic signal controller operational status and compare against the control information sent by the center. | Existing |
| *Requirement:* | 4 The center shall collect traffic signal controller fault data from the field. | Existing |
| *Requirement:* | 5 The center shall implement control plans to coordinate signalized intersections, under control of center personnel, based on data from sensors and surveillance monitoring traffic conditions, incidents, emergency vehicle preemptions, the passage of commercial vehicles with unusual loads, equipment faults, pedestrian crossings, etc. | Existing |
| *Functional Area:* **TMC Traffic Information Dissemination**<br>Controls dissemination of traffic-related data to other centers, the media, and travelers via the driver information systems (DMS, HAR) that it operates. | | |
| *Requirement:* | 1 The center shall remotely control dynamic messages signs for dissemination of traffic and other information to drivers. | Existing |
| *Requirement:* | 2 The center shall remotely control driver information systems that communicate directly from a center to the vehicle radio (such as Highway Advisory Radios) for dissemination of traffic and other information to drivers. | Planned |
| *Requirement:* | 3 The center shall collect operational status for the driver information systems equipment (DMS, HAR, etc.). | Existing |
| *Requirement:* | 4 The center shall collect fault data for the driver information systems equipment (DMS, HAR, etc.) for repair. | Existing |
| *Requirement:* | 5 The center shall retrieve locally stored traffic information, including current and forecasted traffic information, road and weather conditions, traffic incident information, information on diversions and alternate routes, closures, and special traffic restrictions (lane/shoulder use, weight restrictions, width restrictions, HOV requirements), etc. | Existing |
| *Requirement:* | 8 The center shall provide the capability for center personnel to control the nature of the data that is available to non-traffic operations centers and the media. | Existing |
| *Functional Area:* **TMC Regional Traffic Control**<br>Coordination between traffic management centers in order to share traffic information between centers as well as control of traffic management field equipment. This may be used during incidents and special events and during day-to-day operations. | | |
| *Requirement:* | 1 The center shall exchange traffic information with other traffic management centers, includes incident information, congestion data, traffic data, signal timing plans, and real-time signal control information. | Planned |

| Architecture | | Status |
|---|---|---|
| **Gulf Region ITS Architecture** | | |
| *Element:* **City of Pascagoula TOC** | | |
| *Entity:* **Traffic Management** | | |
| *Functional Area:* | **TMC Regional Traffic Control**<br>Coordination between traffic management centers in order to share traffic information between centers as well as control of traffic management field equipment. This may be used during incidents and special events and during day-to-day operations. | |
| *Requirement:* | 2 The center shall exchange traffic control information with other traffic management centers, includes remote monitoring and control of traffic management devices (e.g. signs, sensors, signals, cameras, etc.). | Planned |
| *Functional Area:* | **TMC Incident Dispatch Coordination/Communication**<br>Center-based capability to formulate an incident response that takes into account the incident potential, incident impacts, and/or resources required for incident management including proposing and facilitating the dispatch of emergency response and service vehicles as well as coordinating response with all appropriate cooperating agencies. | |
| *Requirement:* | 1 The center shall exchange alert information and status with emergency management centers. The information includes notification of a major emergency such as a natural or man-made disaster, civil emergency, or child abduction for distribution to the public. The information may include the alert originator, the nature of the emergency, the geographic area affected by the emergency, the effective time period, and information and instructions necessary for the public to respond to the alert. This may also identify specific information that should not be released to the public. | Existing |
| *Requirement:* | 2 The center shall coordinate planning for incidents with emergency management centers - including pre-planning activities for disaster response, evacuation, and recovery operations. | Existing |
| *Requirement:* | 4 The center shall exchange incident and threat information with emergency management centers as well as maintenance and construction centers; including notification of existence of incident and expected severity, location, time and nature of incident. | Existing |
| *Requirement:* | 5 The center shall respond to requests from emergency management to provide traffic management resources to implement special traffic control measures, assist in clean up, verify an incident, etc. This may also involve coordination with maintenance centers. | Existing |
| *Requirement:* | 6 The center shall receive inputs concerning upcoming events that would effect the traffic network from event promoters, traveler information service providers, media, and rail operations centers. | Existing |
| *Requirement:* | 9 The center shall coordinate information and controls with other traffic management centers. | Planned |
| *Requirement:* | 11 The center shall support an interface with a map update provider, or other appropriate data sources, through which updates of digitized map data can be obtained and used as a background for traffic incident management. | Planned |
| *Functional Area:* | **TMC Evacuation Support** | |

| Architecture | | Status |
|---|---|---|
| **Gulf Region ITS Architecture** | | |
| *Element:* **City of Pascagoula TOC** | | |
| *Entity:* **Traffic Management** | | |
| *Functional Area:* **TMC Evacuation Support**<br>Development, coordination, and execution of special traffic management strategies during evacuation and subsequent reentry of a population in the vicinity of a disaster or major emergency. Interfaces with emergency management and other traffic management centers. | | |
| *Requirement:* | 1 The center shall coordinate planning for evacuation with emergency management centers - including pre-planning activities such as establishing routes, areas to be evacuated, timing, etc. | Existing |
| *Requirement:* | 2 The center shall support requests from emergency management centers to preempt the current traffic control strategy, activate traffic control and closure systems such as gates and barriers, activate safeguard systems, or use driver information systems to support evacuation traffic control plans. | Existing |
| *Requirement:* | 3 The center shall coordinate information and controls with other traffic management centers. | Existing |
| *Requirement:* | 4 The center shall coordinate execution of evacuation strategies with emergency management centers - including activities such as setting closures and detours, establishing routes, updating areas to be evacuated, timing the process, etc. | Existing |
| *Functional Area:* **TMC Reversible Lane Management**<br>Remotely controls traffic sensors, surveillance, and automated reversible lane equipment and lane control signals to control traffic in reversible lanes. | | |
| *Requirement:* | 1 The center shall remotely control devices to detect traffic in reversible lanes, including wrong-way vehicles. | Planned |
| *Requirement:* | 2 The center shall monitor the use of reversible lanes and detect wrong-way vehicles in reversible lanes using sensor and surveillance information, and the current lane control status (which direction the lane is currently operating). | Planned |
| *Requirement:* | 3 The center shall remotely control automated reversible lane equipment and driver information systems (such as lane control signals) that control traffic in reversible lanes on surface streets. | Planned |
| *Requirement:* | 5 The center shall collect operational status for the reversible lane field equipment. | Planned |
| *Requirement:* | 6 The center shall collect fault data for the reversible lane field equipment and send to the maintenance center for repair. | Planned |
| *Requirement:* | 7 The center shall provide the capability for center personnel to control access and management of reversible lane facilities, including the direction of traffic flow changes during the day, especially between the peak hours and dedication of more lanes to the congestion direction during special events. | Planned |
| *Functional Area:* **Barrier System Management**<br>Remotely controls barrier systems such as gates and other systems that manage entry to roadways, transportation facilities and infrastructure. | | |
| *Requirement:* | 1 The center shall remotely control barrier systems for transportation facilities and infrastructure. Barrier systems include automated or remotely controlled gates, barriers and other systems that manage entry to roadways. | Planned |

| Architecture | | Status |
|---|---|---|
| **Gulf Region ITS Architecture** | | |
| *Element:* **City of Pascagoula TOC** | | |
| *Entity:* **Traffic Management** | | |
| *Functional Area:* **Barrier System Management** Remotely controls barrier systems such as gates and other systems that manage entry to roadways, transportation facilities and infrastructure. | | |
| *Requirement:* | 2 The center shall collect barrier system operational status. | Planned |
| *Requirement:* | 3 The center shall collect barrier system fault data and send to the maintenance center for repair. | Planned |
| *Functional Area:* **TMC Work Zone Traffic Management** Coordination with maintenance systems using work zone images and traveler information systems (such as DMS), and distribution of work plans so that work zones are established that have minimum traffic impact. | | |
| *Requirement:* | 3 The center shall remotely control driver information systems (such as dynamic messages signs, highway advisory radios) to advise drivers of activity around a work zone. | Existing |
| *Requirement:* | 4 The center shall collect operational status for the driver information systems equipment in work zones. | Existing |
| *Requirement:* | 5 The center shall collect fault data for the driver information systems equipment in work zones for repair. | Existing |
| *Functional Area:* **Traffic Data Collection** Collection and storage of traffic management data. For use by operations personnel or data archives in the region. | | |
| *Requirement:* | 1 The center shall collect traffic management data such as operational data, event logs, etc. | Existing |
| *Requirement:* | 2 The center shall assign quality control metrics and meta-data to be stored along with the data. Meta-data may include attributes that describe the source and quality of the data and the conditions surrounding the collection of the data. | Planned |
| *Requirement:* | 3 The center shall receive and respond to requests from ITS Archives for either a catalog of the traffic data or for the data itself. | Planned |
| *Requirement:* | 4 The center shall be able to produce sample products of the data available. | Planned |
| *Element:* **City of Pascagoula TOC Roadside Equipment** | | |
| *Entity:* **Roadway Subsystem** | | |
| *Functional Area:* **Roadway Signal Controls** Field elements including traffic signal controllers for use at signalized intersections; also supports pedestrian crossings. | | |
| *Requirement:* | 1 The field element shall control traffic signals at intersections and on main highways for urban and rural areas, under center control. | Existing |
| *Requirement:* | 2 The field element shall collect pedestrian images and pedestrian sensor data, and respond to pedestrian crossing requests via display, audio signal, or other manner. | Existing |
| *Requirement:* | 3 The field element shall provide the capability to notify the traffic management center that a pedestrian has requested right-of-way and when the request was or will be granted (request for right-of-way). | Existing |

| Architecture | | Status |
|---|---|---|
| **Gulf Region ITS Architecture** | | |
| *Element:* **City of Pascagoula TOC Roadside Equipment** | | |
| *Entity:* **Roadway Subsystem** | | |
| *Functional Area:* | **Roadway Signal Controls**<br>Field elements including traffic signal controllers for use at signalized intersections; also supports pedestrian crossings. | |
| *Requirement:* | 4 The field element shall monitor operation of traffic signal controllers and report to the center any instances in which the indicator response does not match that expected from the indicator control information. | Existing |
| *Requirement:* | 5 The field element shall monitor operation of traffic signal controllers and report to the center any instances in which the indicator response does not match that expected from known indicator preemptions. | Existing |
| *Requirement:* | 6 The field element shall return traffic signal controller operational status to the controlling center. | Existing |
| *Requirement:* | 7 The field element shall return traffic signal controller fault data to the maintenance center for repair. | Existing |
| *Functional Area:* | **Roadway Signal Priority**<br>Field elements that provide the capability to receive vehicle signal priority requests and control traffic signals accordingly. | |
| *Requirement:* | 1 The field element shall respond to requests for indicator (e.g., signal) preemption requests from emergency vehicles at intersections, pedestrian crossings, and multimodal crossings. | Planned |
| *Requirement:* | 3 The field element shall notify controlling traffic management center and maintenance center that the signal timing has changed based on a signal preemption/priority request to help those centers determine whether a fault detected at the signal is a true malfunction or due to a signal override. | Planned |
| *Functional Area:* | **Roadway Traffic Information Dissemination**<br>Driver information systems, such as dynamic message signs and Highway Advisory Radio (HAR). | |
| *Requirement:* | 1 The field element shall include dynamic messages signs for dissemination of traffic and other information to drivers, under center control; the DMS may be either those that display variable text messages, or those that have fixed format display(s) (e.g. vehicle restrictions, or lane open/close). | Existing |
| *Requirement:* | 2 The field element shall include driver information systems that communicate directly from a center to the vehicle radio (such as Highway Advisory Radios) for dissemination of traffic and other information to drivers, under center control. | Planned |
| *Requirement:* | 4 The field element shall provide operational status for the driver information systems equipment (DMS, HAR, etc.) to the center. | Existing |
| *Requirement:* | 5 The field element shall provide fault data for the driver information systems equipment (DMS, HAR, etc.) to the center for repair. | Existing |
| *Functional Area:* | **Roadway Equipment Coordination**<br>Field elements that control and send data to other field elements (such as environmental sensors that send data to a DMS or coordination between traffic controllers on adjacent intersections), without center control. | |

| Architecture | | Status |
|---|---|---|
| **Gulf Region ITS Architecture** | | |
| *Element:* **City of Pascagoula TOC Roadside Equipment** | | |
| *Entity:* **Roadway Subsystem** | | |
| *Functional Area:* | **Roadway Equipment Coordination**<br>Field elements that control and send data to other field elements (such as environmental sensors that send data to a DMS or coordination between traffic controllers on adjacent intersections), without center control. | |
| *Requirement:* | 1 The field element shall include sensors (such as traffic, environmental, and work zone intrusion detection sensors) that provide data and status information to other field element devices (such as dynamic message signs, ramp meters, traffic signals, work zone intrusion alert systems), without center control. | Existing |
| *Requirement:* | 2 The field element shall include sensors (such as traffic, environmental, and work zone intrusion detection sensors) that receive control information from other field element devices, without center control. | Existing |
| *Requirement:* | 3 The field element shall include devices (such as arterial or freeway controllers, roadway automated treatment systems, barrier and safeguard systems, emissions or pollution systems, and work zone intrusion alert systems) that provide data and status information to other field element devices (such as dynamic message signs, traffic controllers on adjacent intersections), without center control. | Existing |
| *Requirement:* | 4 The field element shall include devices (such as arterial or freeway controllers, roadway automated treatment systems, barrier and safeguard systems, emissions or pollution systems, and work zone intrusion alert systems) that receive control information from other field element devices, without center control. | Existing |
| *Functional Area:* | **Field Barrier System Control**<br>Field elements that control barrier systems such as gates and other systems that manage entry to roadways, transportation facilities and infrastructure. | |
| *Requirement:* | 1 The field element shall activate barrier systems for transportation facilities and infrastructure under center control. Barrier systems include automated or remotely controlled gates, barriers and other systems that manage entry to roadways. | Planned |
| *Requirement:* | 2 The field element shall return barrier system operational status to the controlling center. | Planned |
| *Requirement:* | 3 The field element shall return barrier system fault data to the maintenance center for repair. | Planned |
| *Functional Area:* | **Roadway Reversible Lanes**<br>Traffic sensors, surveillance, and automated reversible lane equipment and lane control signals to control traffic in reversible lanes. | |
| *Requirement:* | 1 The field element shall monitor traffic in reversible lanes, including wrong-way vehicles, using sensors and surveillance equipment under center control. | Planned |
| *Requirement:* | 2 The field element shall include automated reversible lane equipment and driver information systems (such as lane control signals) that control traffic in reversible lanes on surface streets, under center control. | Planned |
| *Requirement:* | 4 The field element shall provide operational status for the reversible lane field equipment to the center. | Planned |

| Architecture | | Status |
|---|---|---|
| **Gulf Region ITS Architecture** | | |
| *Element:* **City of Pascagoula TOC Roadside Equipment** | | |
| *Entity:* **Roadway Subsystem** | | |
| *Functional Area:* | **Roadway Reversible Lanes**<br>Traffic sensors, surveillance, and automated reversible lane equipment and lane control signals to control traffic in reversible lanes. | |
| *Requirement:* | 5 The field element shall provide fault data for the reversible lane field equipment to the center. | Planned |
| *Functional Area:* | **Roadway Work Zone Traffic Control**<br>Field elements in maintenance and construction areas including CCTV cameras, driver information systems (such as DMS), and gates/barriers that monitor and control traffic and provide information directly to drivers in affected areas. | |
| *Requirement:* | 2 Under traffic and maintenance center control, the field element shall include driver information systems (such as dynamic messages signs and highway advisory radios) that advise drivers of activity around the work zone through which they are currently passing. | Existing |
| *Requirement:* | 5 The field element shall provide operational status for the surveillance (e.g. CCTV), driver information systems, and gates/barriers in work zones to the maintenance center. | Existing |
| *Requirement:* | 6 The field element shall provide fault data for the surveillance (e.g. CCTV), driver information systems, and gates/barriers in work zones to the maintenance center for repair. | Existing |
| *Element:* **City/County 911 Dispatch Centers** | | |
| *Entity:* **Emergency Management** | | |
| *Functional Area:* | **Emergency Call-Taking**<br>Provides interface to the emergency call-taking systems such as the Emergency Telecommunications System (e.g., 911) that correlate call information with emergencies reported by transit agencies, commercial vehicle operators, or other public safety agencies. Allows the operator to verify the incident and forward the information to the responding agencies. | |
| *Requirement:* | 1 The center shall support the interface to the Emergency Telecommunications System (e.g. 911 or 7-digit call routing) to receive emergency notification information and provide it to the emergency system operator. | Existing |
| *Requirement:* | 2 The center shall receive emergency call information from 911 services and present the possible incident information to the emergency system operator. | Existing |
| *Requirement:* | 4 The center shall receive emergency call information from mayday service providers and present the possible incident information to the emergency system operator. | Existing |
| *Requirement:* | 5 The center shall receive emergency notification information from other public safety agencies and present the possible incident information to the emergency system operator. | Existing |
| *Requirement:* | 6 The center shall receive emergency notification information from public transit systems and present the possible incident information to the emergency system operator. | Existing |

| Architecture | | | Status |
|---|---|---|---|
| **Gulf Region ITS Architecture** | | | |
| *Element:* **City/County 911 Dispatch Centers** | | | |
| *Entity:* **Emergency Management** | | | |
| *Functional Area:* | **Emergency Call-Taking** Provides interface to the emergency call-taking systems such as the Emergency Telecommunications System (e.g., 911) that correlate call information with emergencies reported by transit agencies, commercial vehicle operators, or other public safety agencies. Allows the operator to verify the incident and forward the information to the responding agencies. | | |
| *Requirement:* | 7 | The center shall coordinate, correlate, and verify all emergency inputs, including those identified based on external calls and internal analysis of security sensor and surveillance data, and assign each a level of confidence. | Existing |
| *Requirement:* | 9 | The center shall forward the verified emergency information to the responding agency based on the location and nature of the emergency. | Existing |
| *Requirement:* | 10 | The center shall update the incident information log once the emergency system operator has verified the incident. | Existing |
| *Requirement:* | 11 | The center shall provide the capability for digitized map data to act as the background to the emergency information presented to the emergency system operator. | Existing |
| *Functional Area:* | **Emergency Dispatch** Dispatch emergency vehicles to incidents, tracking their location and status. Pertinent incident information is gathered and relayed to the responding units. | | |
| *Requirement:* | 1 | The center shall dispatch emergency vehicles to respond to verified emergencies under center personnel control. | Existing |
| *Requirement:* | 2 | The center shall store the current status of all emergency vehicles available for dispatch and those that have been dispatched. | Existing |
| *Requirement:* | 3 | The center shall relay location and incident details to the responding vehicles. | Existing |
| *Requirement:* | 4 | The center shall track the location and status of emergency vehicles responding to an emergency based on information from the emergency vehicle. | Existing |
| *Requirement:* | 5 | The center shall store and maintain the emergency service responses in an action log. | Existing |
| *Requirement:* | 6 | The center shall provide the capability for digitized map data to act as the background to the information presented to the emergency system operator. | Existing |
| *Requirement:* | 7 | The center shall receive traffic images to support dispatch of emergency vehicles. | Planned |
| *Requirement:* | 9 | The center shall coordinate response to incidents with other Emergency Management centers to ensure appropriate resources are dispatched and utilized. | Existing |
| *Functional Area:* | **Emergency Routing** Routing of emergency vehicles to facilitate the quickest/safest arrival. Routes may be determined based on real-time traffic information and road conditions or routes may be provided by Traffic Management on request. | | |
| *Requirement:* | 2 | The center shall receive inputs from traffic management and maintenance centers on the location and status of traffic control equipment and work zones along potential emergency routes. | Existing |

| Architecture | | | Status |
|---|---|---|---|
| **Gulf Region ITS Architecture** | | | |
| *Element:* **City/County 911 Dispatch Centers** | | | |
| *Entity:* **Emergency Management** | | | |
| *Functional Area:* | **Emergency Routing**<br>Routing of emergency vehicles to facilitate the quickest/safest arrival. Routes may be determined based on real-time traffic information and road conditions or routes may be provided by Traffic Management on request. | | |
| *Requirement:* | 3 | The center shall receive status information from care facilities to determine the appropriate facility and its location. | Existing |
| *Requirement:* | 4 | The center shall receive asset restriction information from maintenance centers to support the dispatching of appropriate emergency resources. | Existing |
| *Requirement:* | 7 | The center shall provide the capability to request special traffic control measures, such as signal preemption, from the traffic management center to facilitate emergency vehicle progress along the suggested route. | Existing |
| *Requirement:* | 9 | The center shall provide the capability for digitized map data to act as the background to the information presented to the emergency system operator. | Existing |
| *Functional Area:* | **Incident Command**<br>Tactical decision support, resource coordination, and communications integration among emergency management agencies for Incident Commands that are established by first responders to support local management of an incident. | | |
| *Requirement:* | 1 | The center shall provide tactical decision support, resource coordination, and communications integration for Incident Commands that are established by first responders to support local management of an incident. | Existing |
| *Requirement:* | 2 | The center shall provide incident command communications with public safety, emergency management, transportation, and other allied response agency centers. | Existing |
| *Requirement:* | 3 | The center shall track and maintain resource information and action plans pertaining to the incident command. | Existing |
| *Requirement:* | 4 | The center shall share incident command information with other public safety agencies including resource deployment status, hazardous material information, rail incident information, evacuation advice as well as traffic, road, and weather | Existing |
| *Requirement:* | 5 | The center shall assess the status of responding emergency vehicles as part of an incident command. | Existing |
| *Functional Area:* | **Emergency Early Warning System**<br>Monitors alerting and advisory systems, information collected by ITS surveillance and sensors, and reports from other agencies in order to identify potential, imminent, or in-progress major incidents or disasters. Notification is provided to other ITS centers to notify the traveling public. | | |
| *Requirement:* | 1 | The center shall monitor information from Alerting and Advisory Systems such as the Information Sharing and Analysis Centers (ISACs), the National Infrastructure Protection Center (NIPC), the Homeland Security Advisory System (HSAS), etc. The information may include assessments (general incident and vulnerability awareness information), advisories (identification of threats or recommendations to increase preparedness levels), or alerts (information on imminent or in-progress emergencies). | Existing |

| Architecture | | Status |
|---|---|---|
| **Gulf Region ITS Architecture** | | |
| *Element:* **City/County 911 Dispatch Centers** | | |
| *Entity:* **Emergency Management** | | |
| *Functional Area:* | **Emergency Early Warning System**<br>Monitors alerting and advisory systems, information collected by ITS surveillance and sensors, and reports from other agencies in order to identify potential, imminent, or in-progress major incidents or disasters. Notification is provided to other ITS centers to notify the traveling public. | |
| *Requirement:* | 12 The center shall present the alert and advisory information and the status of the actions taken in response to the alert by the other centers to the emergency system operator as received from other system inputs. | Existing |
| *Functional Area:* | **Emergency Response Management**<br>Strategic emergency planning and response capabilities and broad inter-agency interfaces to support large-scale incidents and disasters, commonly associated with Emergency Operations Centers. | |
| *Requirement:* | 1 The center shall provide strategic emergency response capabilities such as that of an Emergency Operations Center for large-scale incidents and disasters. | Existing |
| *Requirement:* | 2 The center shall manage coordinated inter-agency responses to and recovery from large-scale emergencies. Such agencies include traffic management, transit, maintenance and construction management, rail operations, and other emergency management agencies. | Existing |
| *Requirement:* | 3 The center shall provide the capability to implement response plans and track progress through the incident by exchanging incident information and distributing response status to allied agencies. | Existing |
| *Requirement:* | 4 The center shall develop, coordinate with other agencies, and store emergency response plans. | Existing |
| *Requirement:* | 5 The center shall track the availability of resources (including vehicles, roadway cleanup, etc.), request additional resources from traffic, maintenance, or other emergency centers if needed. | Existing |
| *Requirement:* | 6 The center shall allocate the appropriate emergency services, resources, and vehicle (s) to respond to incidents, and shall provide the capability to override the current allocation to suit the special needs of a current incident. | Existing |
| *Requirement:* | 7 The center shall receive event scheduling information from Event Promoters. | Existing |
| *Requirement:* | 12 The center shall provide information to the media concerning the status of an emergency response. | Existing |
| *Requirement:* | 13 The center shall provide the capability for digitized map data to act as the background to the information presented to the emergency system operator. | Existing |
| *Requirement:* | 14 The center shall provide the capability for center personnel to provide inputs to the management of incidents, disasters and evacuations. | Existing |
| *Functional Area:* | **Emergency Evacuation Support**<br>Evacuation planning and coordination to manage evacuation and reentry of a population in the vicinity of a disaster or other emergency that poses a risk to public safety. | |

| Architecture | | Status |
|---|---|---|
| **Gulf Region ITS Architecture** | | |
| *Element:* **City/County 911 Dispatch Centers** | | |
| *Entity:* **Emergency Management** | | |
| *Functional Area:* | **Emergency Evacuation Support**<br>Evacuation planning and coordination to manage evacuation and reentry of a population in the vicinity of a disaster or other emergency that poses a risk to public safety. | |
| *Requirement:* | 1 The center shall manage inter-agency coordination of evacuation operations, from initial planning through the evacuation process and reentry. | Existing |
| *Requirement:* | 2 The center shall develop and exchange evacuation plans with allied agencies prior to the occurrence of a disaster. | Existing |
| *Requirement:* | 3 The center shall provide an interface to the emergency system operator to enter evacuation plans and procedures and present the operator with other agencies' plans. | Existing |
| *Functional Area:* | **Emergency Data Collection**<br>Collection and storage of information related to Emergency Management. For use by operations personnel or data archives in the region. | |
| *Requirement:* | 1 The center shall collect emergency service data, emergency vehicle management data, emergency vehicle data, sensor and surveillance data, threat data, and incident data. | Existing |
| *Requirement:* | 3 The center shall receive and respond to requests from ITS Archives for either a catalog of the emergency management data or for the data itself. | Existing |
| *Requirement:* | 4 The center shall be able to produce sample products of the data available. | Existing |
| *Element:* **City/County Emergency Vehicles** | | |
| *Entity:* **Emergency Vehicle Subsystem** | | |
| *Functional Area:* | **On-board EV En Route Support**<br>On-board systems for gathering of dispatch and routing information for emergency vehicle personnel, vehicle tracking, communications with care facilities, and signal preemption via short range communication directly with traffic control equipment at the roadside. | |
| *Requirement:* | 1 The emergency vehicle, including roadway service patrols, shall compute the location of the emergency vehicle based on inputs from a vehicle location determination function. | Planned |
| *Requirement:* | 2 The emergency vehicle, including roadway service patrols, shall send the vehicle's location and operational data to the center for emergency management and dispatch. | Planned |
| *Requirement:* | 3 The emergency vehicle, including roadway service patrols, shall receive incident details and a suggested route when dispatched to a scene. | Planned |
| *Requirement:* | 4 The emergency vehicle shall send the current en route status (including estimated time of arrival) and requests for emergency dispatch updates. | Planned |
| *Requirement:* | 5 The emergency vehicle shall send requests to traffic signal control equipment at the roadside to preempt the signal. | Existing |

| Architecture | | Status |
|---|---|---|
| **Gulf Region ITS Architecture** | | |
| *Element:* **City/County Emergency Vehicles** | | |
| *Entity:* **Emergency Vehicle Subsystem** | | |
| *Functional Area:* | **On-board EV En Route Support**<br>On-board systems for gathering of dispatch and routing information for emergency vehicle personnel, vehicle tracking, communications with care facilities, and signal preemption via short range communication directly with traffic control equipment at the roadside. | |
| *Requirement:* | 6 The emergency vehicle shall provide the personnel on-board with dispatch information, including incident type and location, and forward an acknowledgment from personnel to the center that the vehicle is on its way to the incident scene. | Planned |
| *Requirement:* | 7 The emergency vehicle shall send patient status information to the care facility along with a request for further information. | Planned |
| *Requirement:* | 8 The emergency vehicle shall forward care facility status information to emergency vehicle personnel, including the location, specialized services, quality of care, waiting time, number of rooms available, and emergency room status of hospitals or emergency care providers. | Planned |
| *Functional Area:* | **On-board EV Incident Management Communication**<br>On-board systems provide communications support to first responders. Incident information is provided to dispatched emergency personnel. Emergency personnel transmit information about the incident and response status. | |
| *Requirement:* | 1 The emergency vehicle shall receive dispatch instructions sufficient to enable emergency personnel in the field to implement an effective incident response. It includes local traffic, road, and weather conditions, hazardous material information, and the current status of resources that have been allocated to an incident. | Existing |
| *Requirement:* | 2 The emergency vehicle shall provide an interface to the center for emergency personnel to transmit information about the incident site such as the extent of injuries, identification of vehicles and people involved, hazardous material, etc. | Existing |
| *Requirement:* | 3 The emergency vehicle shall provide an interface to the center for emergency personnel to transmit information about the current incident response status such as the identification of the resources on site, site management strategies in effect, and current clearance status. | Existing |
| *Element:* **Coast Transit Authority** | | |
| *Entity:* **Emergency Management** | | |
| *Functional Area:* | **Center Secure Area Surveillance**<br>Management of security surveillance devices and analysis of that data to detect potential threats. Areas under surveillance may include transit stops, transit stations, rest areas, park and ride lots, modal interchange facilities, on-board a transit vehicle, etc. | |
| *Requirement:* | 2 The center shall remotely monitor video images and audio surveillance data collected in traveler secure areas, which include transit stations, transit stops, rest areas, park and ride lots, and other fixed sites along travel routes (e.g., emergency pull-off areas and travel information centers). The data may be raw or pre-processed in the field. | Existing |

| Architecture | | | Status |
|---|---|---|---|
| **Gulf Region ITS Architecture** | | | |
| *Element:* **Coast Transit Authority** | | | |
| *Entity:* **Emergency Management** | | | |
| *Functional Area:* | **Center Secure Area Surveillance** Management of security surveillance devices and analysis of that data to detect potential threats. Areas under surveillance may include transit stops, transit stations, rest areas, park and ride lots, modal interchange facilities, on-board a transit vehicle, etc. | | |
| *Requirement:* | 3 | The center shall remotely monitor video images and audio surveillance data collected on-board transit vehicles. The data may be raw or pre-processed in the field. | Planned |
| *Requirement:* | 5 | The center shall identify potential security threats based on collected security surveillance data. | Existing |
| *Requirement:* | 6 | The center shall verify potential security threats by correlating security surveillance data from multiple sources. | Existing |
| *Requirement:* | 8 | The center shall remotely control security surveillance devices in traveler secure areas, which include transit stations, transit stops, rest areas, park and ride lots, and other fixed sites along travel routes (e.g., emergency pull-off areas and travel information centers). | Existing |
| *Requirement:* | 9 | The center shall remotely control security surveillance devices on-board transit vehicles. | Planned |
| *Requirement:* | 12 | The center shall respond to control data from center personnel regarding security surveillance data collection, processing, threat detection, and image matching. | Existing |
| *Entity:* **Transit Management** | | | |
| *Functional Area:* | **Transit Center Vehicle Tracking** Monitoring transit vehicle locations via interactions with on-board systems. Furnish users with real-time transit schedule information and maintain interface with digital map providers. | | |
| *Requirement:* | 1 | The center shall monitor the locations of all transit vehicles within its network. | Planned |
| *Requirement:* | 2 | The center shall determine adherence of transit vehicles to their assigned schedule. | Planned |
| *Requirement:* | 3 | The center shall support an interface with a map update provider, or other appropriate data sources, through which updates of digitized map data can be obtained and used as a background for transit tracking and dispatch. | Planned |
| *Requirement:* | 4 | The center shall provide transit operational data to traveler information service providers. | Planned |
| *Functional Area:* | **Transit Center Fixed-Route Operations** Management of fixed route transit operations. Planning, scheduling, and dispatch associated with fixed and flexible route transit services. Updates customer service operator systems, and provides current vehicle schedule adherence and optimum scenarios for schedule adjustment. | | |
| *Requirement:* | 1 | The center shall generate transit routes and schedules based on such factors as parameters input by the system operator, road network conditions, operational data on current routes and schedules, and digitized map data. | Existing |

| Architecture | | | Status |
|---|---|---|---|
| **Gulf Region ITS Architecture** | | | |
| *Element:* **Coast Transit Authority** | | | |
| *Entity:* **Transit Management** | | | |
| *Functional Area:* | **Transit Center Fixed-Route Operations** Management of fixed route transit operations. Planning, scheduling, and dispatch associated with fixed and flexible route transit services. Updates customer service operator systems, and provides current vehicle schedule adherence and optimum scenarios for schedule adjustment. | | |
| *Requirement:* | 2 | The center shall provide the interface to the system operator to control the generation of new routes and schedules (transit services) including the ability to review and update the parameters used by the routes and schedules generation processes and to initiate these processes | Existing |
| *Requirement:* | 3 | The center shall be able to generate special routes and schedules to support an incident, disaster, evacuation, or other emergency. | Existing |
| *Requirement:* | 4 | The center shall dispatch fixed route or flexible route transit vehicles | Existing |
| *Requirement:* | 5 | The center shall collect transit operational data for use in the generation of routes and schedules. | Existing |
| *Requirement:* | 6 | The center shall provide instructions or corrective actions to the transit vehicle operators based upon operational needs. | Existing |
| *Requirement:* | 7 | The center shall manage large deviations of individual transit vehicles, deviations in rural areas, and deviations of large numbers of vehicles. | Existing |
| *Requirement:* | 8 | The center shall generate the necessary corrective actions which may involve more than the vehicles concerned and more far reaching action, such as, the introduction of extra vehicles, wide area signal priority by traffic management, the premature termination of some services, etc. | Existing |
| *Requirement:* | 9 | The center shall exchange information with Maintenance and Construction Operations concerning work zones, roadway conditions, asset restrictions, work plans, etc. | Existing |
| *Requirement:* | 10 | The center shall disseminate up-to-date schedules and route information to other centers for fixed and flexible route services. | Existing |
| *Functional Area:* | **Transit Center Paratransit Operations** Management of demand response transit services, including paratransit. Planning and scheduling of these services. Supports automated vehicle dispatch and automatically updates customer service operator systems. | | |
| *Requirement:* | 1 | The center shall process trip requests for demand responsive transit services, i.e. paratransit. Sources of the requests may include traveler information service providers. | Existing |
| *Requirement:* | 2 | The center shall monitor the operational status of the demand response vehicles including status of passenger pick-up and drop-off. | Existing |
| *Requirement:* | 3 | The center shall generate demand response transit (including paratransit) routes and schedules based on such factors as parameters input by the system operator, what other demand responsive transit schedules have been planned, the availability and location of vehicles, the relevance of any fixed transit routes and schedules, and road network information. | Existing |

| Architecture | | Status |
|---|---|---|
| **Gulf Region ITS Architecture** | | |
| *Element:* **Coast Transit Authority** | | |
| *Entity:* **Transit Management** | | |
| *Functional Area:* | **Transit Center Paratransit Operations**<br>Management of demand response transit services, including paratransit. Planning and scheduling of these services. Supports automated vehicle dispatch and automatically updates customer service operator systems. | |
| *Requirement:* | 4 The center shall dispatch demand response (paratransit) transit vehicles. | Existing |
| *Requirement:* | 5 The center shall exchange information with Maintenance and Construction Operations concerning work zones, roadway conditions, asset restrictions, work plans, etc. | Existing |
| *Requirement:* | 6 The center shall disseminate up-to-date schedules and route information to other centers for demand responsive transit services (paratransit). | Existing |
| *Functional Area:* | **Transit Center Fare and Load Management**<br>Management of fare collection at the center - includes setting and distributing fare information, central processing of fares for transit as well as other ITS services, links to financial institutions and enforcement agencies. | |
| *Requirement:* | 1 The center shall manage the actual value of transit fares for each segment of each regular transit route, including the transmission of the information to transit vehicles and transit stops or stations. | Planned |
| *Requirement:* | 2 The center shall provide the capability for a system operator to manage the transit fares and control the exchange of transit fare information. | Planned |
| *Requirement:* | 4 The center shall support the payment of transit fare transactions using data provided by the traveler cards / payment instruments. | Planned |
| *Requirement:* | 6 The center shall process requests for transit fares to be paid in advance. | Planned |
| *Requirement:* | 8 The center shall be capable of establishing emergency fare structures to override all other fares during disasters, states of emergency, or evacuations. | Planned |
| *Requirement:* | 10 The center shall collect passenger loading and fare statistics data to implement variable and flexible fare structures. | Planned |
| *Requirement:* | 11 The center shall exchange fare and load information with other transit management centers, including potential Centralized Payments facilities. | Planned |
| *Requirement:* | 12 The center shall provide transit fare information to other centers, including traveler information providers upon request. | Planned |
| *Functional Area:* | **Transit Center Security**<br>Monitor transit vehicle operator or traveler activated alarms; authenticate transit vehicle operators; remotely disable a transit vehicle; alert operators, travelers, and police to potential incidents identified by these security features. | |
| *Requirement:* | 1 The center shall monitor transit vehicle operational data to determine if the transit vehicle is off-route and assess whether a security incident is occurring. | Planned |
| *Requirement:* | 2 The center shall receive reports of emergencies on-board transit vehicles entered directly be the transit vehicle operator or from a traveler through interfaces such as panic buttons or alarm switches. | Planned |

| Architecture | | Status |
|---|---|---|
| **Gulf Region ITS Architecture** | | |
| *Element:* **Coast Transit Authority** | | |
| *Entity:* **Transit Management** | | |
| *Functional Area:* **Transit Center Security**<br>Monitor transit vehicle operator or traveler activated alarms; authenticate transit vehicle operators; remotely disable a transit vehicle; alert operators, travelers, and police to potential incidents identified by these security features. | | |
| *Requirement:* | 3 The center shall support the back-office portion of functionality to authenticate transit vehicle operators. | Planned |
| *Requirement:* | 4 The center shall exchange transit incident information along with other service data with other transit agencies. | Planned |
| *Requirement:* | 5 The center shall receive information pertaining to a wide-area alert such as weather alerts, disaster situations, or child abductions. This information may come from Emergency Management or from other Alerting and Advisory Systems. | Planned |
| *Requirement:* | 6 The center shall send wide-area alert information to travelers (on-board transit vehicles or at stations/stops) and transit vehicle operators. | Planned |
| *Requirement:* | 7 The center shall coordinate the response to security incidents involving transit with other agencies including Emergency Management, other transit agencies, media, traffic management, and traveler information service providers. | Planned |
| *Requirement:* | 8 The center shall receive threat information and status on the integrity of the transit infrastructure. | Planned |
| *Requirement:* | 9 The center shall provide support to remotely disable (or reset the disabling of) a transit vehicle in service. | Planned |
| *Functional Area:* **Transit Vehicle Operator Scheduling**<br>Assignment of transit vehicles and operators to routes or service areas in a fair manner while minimizing labor and overtime services, considering operator preferences, qualifications, accumulated work hours, and other information about each operator. | | |
| *Requirement:* | 1 The center shall maintain records of a transit vehicle operator's performance. This may be done utilizing standardized performance evaluation criteria set forth by governmental regulations and transit operating company policies, assessing the transit vehicle operator's driving history, and assessing comments from the transit vehicle operator's supervisor(s) as well as noting any moving violations or accidents, supervisor comments, government regulations, and company policies. | Existing |
| *Requirement:* | 2 The center shall assess the transit vehicle operator's availability based on previous work assignments, accumulated hours, plus health and vacation commitments. | Existing |
| *Requirement:* | 3 The center shall assign transit vehicle operators to transit schedules based on their eligibility, route preferences, seniority, and transit vehicle availability. | Existing |
| *Requirement:* | 4 The center shall provide an interface through which the transit vehicle operator information can be maintained - either from the transit vehicle operator, a transit system operator (i.e. center personnel), or other functions. | Existing |
| *Functional Area:* **Transit Garage Maintenance** | | |

| Architecture | | Status |
|---|---|---|
| **Gulf Region ITS Architecture** | | |
| *Element:* **Coast Transit Authority** | | |
| *Entity:* **Transit Management** | | |
| *Functional Area:* **Transit Garage Maintenance**<br>Collect operational and maintenance data from transit vehicles, manage vehicle service histories, automatically generate preventative maintenance schedules, and provide information to service personnel. | | |
| *Requirement:* | 1 The center shall collect operational and maintenance data from transit vehicles. | Existing |
| *Requirement:* | 2 The center shall monitor the condition of a transit vehicle to analyze brake, drive train, sensors, fuel, steering, tire, processor, communications equipment, and transit vehicle mileage to identify mileage based maintenance, out-of-specification or imminent failure conditions. | Existing |
| *Requirement:* | 3 The center shall generate transit vehicle maintenance schedules, includes what and when the maintenance or repair is to be performed. | Existing |
| *Requirement:* | 4 The center shall generate transit vehicle availability listings, current and forecast, to support transit vehicle assignment planning based, in part, on the transit vehicle maintenance schedule. | Existing |
| *Requirement:* | 5 The center shall assign technicians to a transit vehicle maintenance schedule, based upon such factors as personnel eligibility, work assignments, preferences and seniority. | Existing |
| *Requirement:* | 6 The center shall verify that the transit vehicle maintenance activities were performed correctly, using the transit vehicle's status, the maintenance personnel's work assignment, and the transit maintenance schedules. | Existing |
| *Requirement:* | 7 The center shall generate a time-stamped maintenance log of all maintenance activities performed on a transit vehicle. | Existing |
| *Requirement:* | 8 The center shall provide the transit system operator with the capability to update transit vehicle maintenance information and receive reports on all transit vehicle operations data. | Existing |
| *Functional Area:* **Transit Center Information Services**<br>Provide interactive traveler information to travelers (on-board transit vehicles, at stops/stations, using personal devices), traveler information service providers, media, and other transit organizations. Includes routes, schedules, transfer options, fares, real-time schedule adherence, current incidents, weather conditions, yellow pages, and special events. | | |
| *Requirement:* | 1 The center shall provide travelers using public transportation with traffic and advisory information upon request. Such information may include transit routes, schedules, transfer options, fares, real-time schedule adherence, current incidents, weather conditions, and special events. | Existing |
| *Requirement:* | 3 The center shall exchange transit schedules, real-time arrival information, fare schedules, and general transit service information with other transit organizations to support transit traveler information systems. | Existing |
| *Requirement:* | 4 The center shall provide transit service information to traveler information service providers including routes, schedules, schedule adherence, and fare information as well as transit service information during evacuation. | Existing |

| Architecture | | Status |
|---|---|---|
| **Gulf Region ITS Architecture** | | |
| *Element:* **Coast Transit Authority** | | |
| *Entity:* **Transit Management** | | |
| *Functional Area:* | **Transit Center Information Services**<br>Provide interactive traveler information to travelers (on-board transit vehicles, at stops/stations, using personal devices), traveler information service providers, media, and other transit organizations. Includes routes, schedules, transfer options, fares, real-time schedule adherence, current incidents, weather conditions, yellow pages, and special events. | |
| *Requirement:* | 6 The center shall broadcast transit advisory data, including alerts and advisories pertaining to major emergencies, or man made disasters. | Existing |
| *Functional Area:* | **Transit Center Multi-Modal Coordination**<br>Generate requests for transit priority on routes and at certain intersections. Coordinate schedules with other agencies and modes, including transit transfer cluster and transfer point information. | |
| *Requirement:* | 1 The center shall analyze transit vehicle schedule performance to determine the need for priority along certain routes or at certain intersections. | Planned |
| *Requirement:* | 2 The center shall send requests for priority along routes or at intersections to traffic management. | Planned |
| *Requirement:* | 3 The center shall coordinate schedules and services between transit agencies, traffic management, maintenance and construction operations, parking management, and other surface or air transportation modes. | Planned |
| *Requirement:* | 4 The center shall share transfer cluster and transfer point information with multimodal transportation service providers, other transit agencies, and traveler information service providers. A transfer cluster is a collection of stops, stations, or terminals where transfers can be made conveniently. | Planned |
| *Requirement:* | 5 The center shall accept requests from traffic management to change routes and schedules as part of the implementation of demand management strategies. | Planned |
| *Functional Area:* | **Transit Evacuation Support**<br>Support evacuation and subsequent reentry of a population in the vicinity of a disaster or other emergency. Coordinate regional evacuation plans and resources including transit and school bus fleets. | |
| *Requirement:* | 1 The center shall manage the use of transit resources to support evacuation and subsequent reentry of a population in the vicinity of a disaster or other emergency. | Existing |
| *Requirement:* | 2 The center shall coordinate regional evacuation plans with Emergency Management - identifying the transit role in an evacuation and the transit resources that would be used. | Existing |
| *Requirement:* | 3 The center shall coordinate the use of transit and school bus fleets during an evacuation, supporting evacuation of those with special needs and the general population. | Existing |
| *Requirement:* | 4 The center shall adjust and update transit service and fare schedules and provide that information to other agencies as they coordinate evacuations. | Existing |
| *Functional Area:* | **Transit Data Collection** | |

| Architecture | | Status |
|---|---|---|
| **Gulf Region ITS Architecture** | | |
| *Element:* **Coast Transit Authority** | | |
| *Entity:* **Transit Management** | | |
| *Functional Area:* **Transit Data Collection** Collection and storage of transit management data. For use by operations personnel or data archives in the region. | | |
| *Requirement:* | 1 The center shall collect transit management data such as transit fares and passenger use, transit services, paratransit operations, transit vehicle maintenance data, etc. | Existing |
| *Requirement:* | 2 The center shall assign quality control metrics and meta-data to be stored along with the data. Meta-data may include attributes that describe the source and quality of the data and the conditions surrounding the collection of the data. | Planned |
| *Requirement:* | 3 The center shall receive and respond to requests from ITS Archives for either a catalog of the transit data or for the data itself. | Planned |
| *Requirement:* | 4 The center shall be able to produce sample products of the data available. | Planned |
| *Element:* **Coast Transit Authority Database** | | |
| *Entity:* **Archived Data Management Subsystem** | | |
| *Functional Area:* **ITS Data Repository** Collect and maintain data and data catalogs from one or more data sources. May include quality checks, error notification, and archive coordination. | | |
| *Requirement:* | 1 The center shall collect data to be archived from one or more data sources. | Existing |
| *Requirement:* | 2 The center shall collect data catalogs from one or more data sources. A catalog describes the data contained in the collection of archived data and may include descriptions of the schema or structure of the data, a description of the contents of the data; e.g., time range of entries, number of entries; or a sample of the data (e. g. a thumbnail). | Planned |
| *Requirement:* | 3 The center shall store the archived data in a focused repository that is suited to a particular set of ITS data users. | Planned |
| *Requirement:* | 4 The center shall include capabilities for performing quality checks on the incoming archived data. | Planned |
| *Requirement:* | 5 The center shall include capabilities for error notification on the incoming archived data. | Planned |
| *Requirement:* | 6 The center shall include capabilities for archive to archive coordination. | Planned |
| *Requirement:* | 8 The center shall perform quality checks on received data. | Planned |
| *Requirement:* | 9 The center shall provide the capability to execute methods on the incoming data such as cleansing, summarizations, aggregations, or transformations applied to the data before it is stored in the archive. | Planned |
| *Requirement:* | 10 The center shall respond to requests from the administrator interface function to maintain the archive data. | Planned |
| *Requirement:* | 11 When data or a catalog of data is received from the archive, the center shall generate the requested data product for the users systems. | Planned |

| Architecture | | Status |
|---|---|---|
| **Gulf Region ITS Architecture** | | |
| *Element:* **Coast Transit Authority Database** | | |
| *Entity:* **Archived Data Management Subsystem** | | |
| *Functional Area:* **ITS Data Repository** Collect and maintain data and data catalogs from one or more data sources. May include quality checks, error notification, and archive coordination. | | |
| *Requirement:* | 12 For archive data requiring financial payment, the center shall process the financial requests and manage an interface to a Financial Institution. | Planned |
| *Element:* **Coast Transit Authority Security Monitoring Systems** | | |
| *Entity:* **Remote Traveler Support** | | |
| *Functional Area:* **Traveler Secure Area Surveillance** Security surveillance devices that monitor traveler-frequented areas such as transit stops and rest stops. | | |
| *Requirement:* | 1 The field element shall include video and/or audio surveillance of traveler secure areas including transit stations, transit stops, rest areas, park and ride lots, and other fixed sites along travel routes (e.g., emergency pull-off areas and traveler information centers). | Existing |
| *Requirement:* | 2 The field element shall be remotely controlled by a center. | Existing |
| *Requirement:* | 3 The field element shall provide equipment status and fault indication of surveillance equipment to a center. | Existing |
| *Requirement:* | 4 The field element shall provide raw video or audio data. | Existing |
| *Element:* **Coast Transit Authority Transit Vehicles** | | |
| *Entity:* **Transit Vehicle Subsystem** | | |
| *Functional Area:* **On-board Transit Trip Monitoring** Support fleet management with automatic vehicle location (AVL) and automated mileage and fuel reporting and auditing. | | |
| *Requirement:* | 1 The transit vehicle shall compute the location of the transit vehicle based on inputs from a vehicle location determination function. | Planned |
| *Requirement:* | 2 The transit vehicle shall support the computation of the location of a transit vehicle using on-board sensors to augment the location determination function. This may include proximity to the transit stops or other known reference points as well as recording trip length. | Planned |
| *Requirement:* | 3 The transit vehicle shall record transit trip monitoring data including vehicle mileage and fuel usage. | Planned |
| *Requirement:* | 4 The transit vehicle shall record transit trip monitoring data including operational status information such as doors open/closed, passenger loading, running times, etc. | Planned |
| *Requirement:* | 5 The transit vehicle shall send the transit vehicle trip monitoring data to center-based trip monitoring functions. | Planned |
| *Functional Area:* **On-board Fixed Route Schedule Management** Collecting of data for schedule generation and adjustment on-board a transit vehicle. Supports communication between the vehicle, operator, and center. | | |
| *Requirement:* | 1 The transit vehicle shall receive transit route information for its assigned route including transit service instructions, traffic information, road conditions, and other information for the operator. | Planned |

| Architecture | | Status |
|---|---|---|
| **Gulf Region ITS Architecture** | | |
| *Element:* **Coast Transit Authority Transit Vehicles** | | |
| *Entity:* **Transit Vehicle Subsystem** | | |
| *Functional Area:* | **On-board Fixed Route Schedule Management**<br>Collecting of data for schedule generation and adjustment on-board a transit vehicle. Supports communication between the vehicle, operator, and center. | |
| *Requirement:* | 2 The transit vehicle shall use the route information and its current location to determine the deviation from the predetermined schedule. | Planned |
| *Requirement:* | 3 The transit vehicle shall calculate the estimated times of arrival (ETA) at transit stops. | Planned |
| *Requirement:* | 4 The transit vehicle shall determine scenarios to correct the schedule deviation. | Planned |
| *Requirement:* | 5 The transit vehicle shall provide the schedule deviations and instructions for schedule corrections to the transit vehicle operator if the deviation is small, or the transit vehicle is operating in an urban area. | Planned |
| *Requirement:* | 6 The transit vehicle shall send the schedule deviation and estimated arrival time information to the center. | Planned |
| *Requirement:* | 7 The transit vehicle shall support the operations of a flexible route service. This may include requests for route deviations that would then lead to schedule corrective actions. | Planned |
| *Functional Area:* | **On-board Paratransit Operations**<br>On-board systems to manage paratransit and flexible-route dispatch requests, including multi-stop runs. Inputs based on the transit vehicle's type and passenger capacity. | |
| *Requirement:* | 1 The transit vehicle shall manage data input to sensor(s) on-board a transit vehicle to determine the vehicle's availability for use in demand responsive and flexible-route transit services based on identity, type, and passenger capacity. | Planned |
| *Requirement:* | 2 The transit vehicle shall receive the status of demand responsive or flexible-route transit schedules and passenger loading from the transit vehicle operator. | Planned |
| *Requirement:* | 3 The transit vehicle shall provide the transit vehicle operator instructions about the demand responsive or flexible-route transit schedule that has been confirmed from the center. | Planned |
| *Functional Area:* | **On-board Transit Fare and Load Management**<br>On-board systems provide variable and flexible fare collection using a travelers fare medium (stored value cards or other payment instrument). Collect data required to determine accurate ridership levels and fare statistics. | |
| *Requirement:* | 1 The transit vehicle shall detect embarking travelers on-board a transit vehicle and read data from the traveler card / payment instrument that they are carrying. | Planned |
| *Requirement:* | 3 The transit vehicle shall determine the traveler's travel routing based on the transit vehicle's current location and the traveler's destination. | Planned |
| *Requirement:* | 4 The transit vehicle shall calculate the traveler's fare based on the origin and destination provided by the traveler as well as factors such as the transit routing, transit fare category, traveler history, and route-specific information. | Planned |

| Architecture | | | Status |
|---|---|---|---|
| **Gulf Region ITS Architecture** | | | |
| *Element:* **Coast Transit Authority Transit Vehicles** | | | |
| *Entity:* **Transit Vehicle Subsystem** | | | |
| *Functional Area:* | **On-board Transit Fare and Load Management**<br>On-board systems provide variable and flexible fare collection using a travelers fare medium (stored value cards or other payment instrument). Collect data required to determine accurate ridership levels and fare statistics. | | |
| *Requirement:* | 5 | The transit vehicle shall have access to the complete range of transit services (routes and schedules) that are available to the traveler. | Planned |
| *Requirement:* | 6 | The transit vehicle shall provide a transit fare payment interface that is suitable for travelers with physical disabilities. | Planned |
| *Requirement:* | 7 | The transit vehicle shall include a database on-board the transit vehicle for use in fare processing from which the fares for all possible trips within the transit operational network can be determined. | Planned |
| *Requirement:* | 8 | The transit vehicle shall support an emergency fare structure overriding all other fares that can be activated during disasters, states of emergency or evacuations. | Planned |
| *Requirement:* | 10 | The transit vehicle shall provide passenger loading and fare statistics data to the center. | Planned |
| *Functional Area:* | **On-board Transit Security**<br>On-board video/audio surveillance systems, threat sensors, and object detection sensors to enhance security and safety on-board a transit vehicles. Also includes silent alarms activated by transit user or vehicle operator, operator authentication, and remote vehicle disabling. | | |
| *Requirement:* | 1 | The transit vehicle shall perform video and audio surveillance inside of transit vehicles and output raw video or audio data for either local monitoring (for processing or direct output to the transit vehicle operator), remote monitoring or for local storage (e.g., in an event recorder). | Planned |
| *Requirement:* | 8 | The transit vehicle shall monitor and output surveillance and sensor equipment status and fault indications. | Planned |
| *Requirement:* | 9 | The transit vehicle shall accept emergency inputs from either the transit vehicle operator or a traveler through such interfaces as panic buttons, silent or audible alarms, etc. | Planned |
| *Requirement:* | 10 | The transit vehicle shall output reported emergencies to the center. | Planned |
| *Requirement:* | 11 | The transit vehicle shall receive acknowledgments of the emergency request from the center and output this acknowledgment to the transit vehicle operator or to the travelers. | Planned |
| *Requirement:* | 12 | The transit vehicle shall be capable of receiving an emergency message for broadcast to the travelers or to the transit vehicle operator. | Planned |
| *Requirement:* | 13 | The transit vehicle shall be capable of disabling or enabling the transit vehicle based on commands from the center or authentic inputs from the transit vehicle operator. | Planned |
| *Requirement:* | 14 | The transit vehicle shall perform authentication of the transit vehicle operator. | Planned |

| Architecture | | Status |
|---|---|---|
| **Gulf Region ITS Architecture** | | |
| *Element:* **Coast Transit Authority Transit Vehicles** | | |
| *Entity:* **Transit Vehicle Subsystem** | | |
| *Functional Area:* **On-board Maintenance** On-board systems to collect and process transit vehicle maintenance data including mileage and vehicle operating conditions for use in scheduling future vehicle maintenance. | | |
| *Requirement:* | 1 The transit vehicle shall collect and process vehicle mileage data available to sensors on-board. | Planned |
| *Requirement:* | 2 The transit vehicle shall collect and process the transit vehicle's operating conditions such as engine temperature, oil pressure, brake wear, internal lighting, environmental controls, etc. | Planned |
| *Requirement:* | 3 The transit vehicle shall transmit vehicle maintenance data to the center to be used for scheduling future vehicle maintenance. | Planned |
| *Functional Area:* **On-board Transit Signal Priority** On-board systems request signal priority through short range communication directly with traffic control equipment at the roadside (intersections, ramps, interchanges, etc.). | | |
| *Requirement:* | 1 The transit vehicle shall determine the schedule deviation and estimated times of arrival (ETA) at transit stops. | Planned |
| *Requirement:* | 2 The transit vehicle shall send priority requests to traffic signal controllers at intersections, pedestrian crossings, and multimodal crossings on the roads (surface streets) and freeway (ramp controls) network that enable a transit vehicle schedule deviation to be corrected. | Planned |
| *Requirement:* | 3 The transit vehicle shall send the schedule deviation data and status of priority requests to the transit vehicle operator. | Planned |
| *Entity:* **Vehicle** | | |
| *Functional Area:* **Vehicle Location Determination** Determines current location of the vehicle using GPS or similar location referencing and provides this information to other in-vehicle functions. | | |
| *Requirement:* | 1 The vehicle shall provide the vehicle's current location to other in-vehicle functions. | Planned |
| *Requirement:* | 2 The vehicle shall calculate the location from one or more sources of position data. These location referencing systems include position systems such as GPS, DGPS, odometer and differential odometers. | Planned |
| *Requirement:* | 3 The vehicle shall refine its calculations as required by other in-vehicle functions. | Planned |
| *Element:* **Coast Transit Authority Website** | | |
| *Entity:* **Information Service Provider** | | |
| *Functional Area:* **ISP Traveler Data Collection** Collects traveler information from other centers, consolidates and refines the collected data, and makes this data available to traveler information applications. | | |
| *Requirement:* | 3 The center shall collect, process, and store transit routes and schedules, transit transfer options, transit fares, and real-time schedule adherence information. | Existing |
| *Functional Area:* **Basic Information Broadcast** | | |

| Architecture | | Status |
|---|---|---|
| **Gulf Region ITS Architecture** | | |
| *Element:* **Coast Transit Authority Website** | | |
| *Entity:* **Information Service Provider** | | |
| *Functional Area:* | **Basic Information Broadcast**<br>Collection, processing, storage, and broadcast dissemination of traffic, transit, maintenance and construction, event, and weather information to traveler interface systems and vehicles. | |
| *Requirement:* | 3 The center shall collect, process, store, and disseminate transit routes and schedules, transit transfer options, transit fares, and real-time schedule adherence information to travelers. | Existing |
| *Requirement:* | 10 The center shall provide the capability for a system operator to control the type and update frequency of broadcast traveler information. | Existing |
| *Element:* **County Emergency Operations Centers** | | |
| *Entity:* **Emergency Management** | | |
| *Functional Area:* | **Emergency Early Warning System**<br>Monitors alerting and advisory systems, information collected by ITS surveillance and sensors, and reports from other agencies in order to identify potential, imminent, or in-progress major incidents or disasters. Notification is provided to other ITS centers to notify the traveling public. | |
| *Requirement:* | 1 The center shall monitor information from Alerting and Advisory Systems such as the Information Sharing and Analysis Centers (ISACs), the National Infrastructure Protection Center (NIPC), the Homeland Security Advisory System (HSAS), etc. The information may include assessments (general incident and vulnerability awareness information), advisories (identification of threats or recommendations to increase preparedness levels), or alerts (information on imminent or in-progress emergencies). | Existing |
| *Requirement:* | 2 The center shall provide the capability to correlate alerts and advisories, incident information, and security sensor and surveillance data. | Existing |
| *Requirement:* | 3 The center shall broadcast wide-area alerts and advisories to traffic management centers for emergency situations such as severe weather events, civil emergencies, child abduction (AMBER alert system), military activities, and other situations that pose a threat to life and property. | Existing |
| *Requirement:* | 4 The center shall broadcast wide-area alerts and advisories to transit management centers for emergency situations such as severe weather events, civil emergencies, child abduction (AMBER alert system), military activities, and other situations that pose a threat to life and property. | Existing |
| *Requirement:* | 6 The center shall broadcast wide-area alerts and advisories to traveler information service providers for emergency situations such as severe weather events, civil emergencies, child abduction (AMBER alert system), military activities, and other situations that pose a threat to life and property. | Existing |
| *Requirement:* | 7 The center shall broadcast wide-area alerts and advisories to maintenance centers for emergency situations such as severe weather events, civil emergencies, child abduction (AMBER alert system), military activities, and other situations that pose a threat to life and property. | Existing |

| Architecture | | | Status |
|---|---|---|---|
| **Gulf Region ITS Architecture** | | | |
| *Element:* **County Emergency Operations Centers** | | | |
| *Entity:* **Emergency Management** | | | |
| *Functional Area:* | **Emergency Early Warning System**<br>Monitors alerting and advisory systems, information collected by ITS surveillance and sensors, and reports from other agencies in order to identify potential, imminent, or in-progress major incidents or disasters. Notification is provided to other ITS centers to notify the traveling public. | | |
| *Requirement:* | 8 | The center shall broadcast wide-area alerts and advisories to other emergency management centers for emergency situations such as severe weather events, civil emergencies, child abduction (AMBER alert system), military activities, and other situations that pose a threat to life and property. | Existing |
| *Requirement:* | 9 | The center shall process status information from each of the centers that have been sent the wide-area alert. | Existing |
| *Requirement:* | 10 | The center shall coordinate the broadcast of wide-area alerts and advisories with other emergency management centers. | Existing |
| *Requirement:* | 11 | The center shall receive incident information from other transportation management centers to support the early warning system. | Existing |
| *Requirement:* | 12 | The center shall present the alert and advisory information and the status of the actions taken in response to the alert by the other centers to the emergency system operator as received from other system inputs. | Existing |
| *Requirement:* | 13 | The center shall support the entry of alert and advisory information directly from the emergency system operator. | Existing |
| *Functional Area:* | **Emergency Response Management**<br>Strategic emergency planning and response capabilities and broad inter-agency interfaces to support large-scale incidents and disasters, commonly associated with Emergency Operations Centers. | | |
| *Requirement:* | 1 | The center shall provide strategic emergency response capabilities such as that of an Emergency Operations Center for large-scale incidents and disasters. | Existing |
| *Requirement:* | 2 | The center shall manage coordinated inter-agency responses to and recovery from large-scale emergencies. Such agencies include traffic management, transit, maintenance and construction management, rail operations, and other emergency management agencies. | Existing |
| *Requirement:* | 3 | The center shall provide the capability to implement response plans and track progress through the incident by exchanging incident information and distributing response status to allied agencies. | Existing |
| *Requirement:* | 4 | The center shall develop, coordinate with other agencies, and store emergency response plans. | Existing |
| *Requirement:* | 5 | The center shall track the availability of resources (including vehicles, roadway cleanup, etc.), request additional resources from traffic, maintenance, or other emergency centers if needed. | Existing |
| *Requirement:* | 6 | The center shall allocate the appropriate emergency services, resources, and vehicle (s) to respond to incidents, and shall provide the capability to override the current allocation to suit the special needs of a current incident. | Existing |

| Architecture | | | Status |
|---|---|---|---|
| **Gulf Region ITS Architecture** | | | |
| *Element:* **County Emergency Operations Centers** | | | |
| *Entity:* **Emergency Management** | | | |
| *Functional Area:* | **Emergency Response Management**<br>Strategic emergency planning and response capabilities and broad inter-agency interfaces to support large-scale incidents and disasters, commonly associated with Emergency Operations Centers. | | |
| *Requirement:* | 7 | The center shall receive event scheduling information from Event Promoters. | Existing |
| *Requirement:* | 10 | The center shall provide the capability to request transit resource availability from transit centers for use during disaster and evacuation operations. | Existing |
| *Requirement:* | 11 | The center shall assimilate the status of the transit, traffic, rail, maintenance, and other emergency center services and systems to create an overall transportation system status, and disseminate to each of these centers and the traveling public via traveler information providers. | Existing |
| *Requirement:* | 12 | The center shall provide information to the media concerning the status of an emergency response. | Existing |
| *Requirement:* | 13 | The center shall provide the capability for digitized map data to act as the background to the information presented to the emergency system operator. | Existing |
| *Requirement:* | 14 | The center shall provide the capability for center personnel to provide inputs to the management of incidents, disasters and evacuations. | Existing |
| *Functional Area:* | **Emergency Evacuation Support**<br>Evacuation planning and coordination to manage evacuation and reentry of a population in the vicinity of a disaster or other emergency that poses a risk to public safety. | | |
| *Requirement:* | 1 | The center shall manage inter-agency coordination of evacuation operations, from initial planning through the evacuation process and reentry. | Existing |
| *Requirement:* | 2 | The center shall develop and exchange evacuation plans with allied agencies prior to the occurrence of a disaster. | Existing |
| *Requirement:* | 3 | The center shall provide an interface to the emergency system operator to enter evacuation plans and procedures and present the operator with other agencies' plans. | Existing |
| *Requirement:* | 4 | The center shall coordinate evacuation destinations and shelter needs with shelter providers (e.g., the American Red Cross) in the region. | Existing |
| *Requirement:* | 5 | The center shall provide evacuation information to traffic, transit, maintenance and construction, rail operations, and other emergency management centers as needed. | Existing |
| *Requirement:* | 6 | The center shall request resources from transit agencies as needed to support the evacuation. | Existing |
| *Requirement:* | 7 | The center shall request traffic management agencies to implement special traffic control strategies and to control evacuation traffic, including traffic on local streets and arterials as well as the major evacuation routes. | Existing |

| Architecture | | Status |
|---|---|---|
| **Gulf Region ITS Architecture** | | |
| *Element:* **County Emergency Operations Centers** | | |
| *Entity:* **Emergency Management** | | |
| *Functional Area:* | **Emergency Evacuation Support**<br>Evacuation planning and coordination to manage evacuation and reentry of a population in the vicinity of a disaster or other emergency that poses a risk to public safety. | |
| *Requirement:* | 8 The center shall provide traveler information systems with evacuation guidance including basic information to assist potential evacuees in determining whether evacuation is necessary and when it is safe to return. | Existing |
| *Requirement:* | 9 The center shall monitor the progress or status of the evacuation once it begins and exchange tactical plans, prepared during the incident, with allied agencies. | Existing |
| *Requirement:* | 10 The center shall monitor the progress of the reentry process. | Existing |
| *Functional Area:* | **Emergency Environmental Monitoring**<br>Current and forecast road and weather information assimilated from weather service providers and emergency vehicles equipped with environmental sensors; used by the operator to more effectively manage incidents. | |
| *Requirement:* | 1 The center shall collect current and forecast road and weather information from weather service providers (such as the National Weather Service and value-added sector specific meteorological services). | Existing |
| *Requirement:* | 3 The center shall collect current road and weather information from roadway maintenance operations. | Planned |
| *Requirement:* | 4 The center shall assimilate current and forecast road conditions and surface weather information to support incident management. | Planned |
| *Requirement:* | 5 The center shall present the current and forecast road and weather information to the emergency system operator. | Planned |
| *Functional Area:* | **Emergency Data Collection**<br>Collection and storage of information related to Emergency Management. For use by operations personnel or data archives in the region. | |
| *Requirement:* | 1 The center shall collect emergency service data, emergency vehicle management data, emergency vehicle data, sensor and surveillance data, threat data, and incident data. | Planned |
| *Requirement:* | 2 The center shall assign quality control metrics and meta-data to be stored along with the data. Meta-data may include attributes that describe the source and quality of the data and the conditions surrounding the collection of the data. | Planned |
| *Requirement:* | 3 The center shall receive and respond to requests from ITS Archives for either a catalog of the emergency management data or for the data itself. | Planned |
| *Requirement:* | 4 The center shall be able to produce sample products of the data available. | Planned |
| *Entity:* **Information Service Provider** | | |
| *Functional Area:* | **ISP Emergency Traveler Information**<br>Collection and distribution of emergency information to the traveler public, including evacuation information and wide-area alerts. | |

| Architecture | | Status |
|---|---|---|
| **Gulf Region ITS Architecture** | | |
| *Element:* **County Emergency Operations Centers** | | |
| *Entity:* **Information Service Provider** | | |
| *Functional Area:* **ISP Emergency Traveler Information**<br>Collection and distribution of emergency information to the traveler public, including evacuation information and wide-area alerts. | | |
| *Requirement:* | 1 The center shall collect and provide to the traveler interface systems emergency evacuation information, including evacuation zones, shelter information, available transportation modes, road closures and detours, changes to transit services, and traffic and road conditions at the origin, destination, and along the evacuation routes. | Existing |
| *Requirement:* | 2 The center shall provide evacuation information to shelter providers. | Existing |
| *Requirement:* | 3 The center shall collect and provide wide-area alert information to the traveler interface system with region-specific data, including major emergencies such as a natural or man-made disaster, civil emergency, child abductions, severe weather watches and warnings, military activities, and law enforcement warnings. | Existing |
| *Requirement:* | 4 The center shall provide the capability for a system operator to control the type and update frequency of emergency and wide-area alert information distributed to travelers. | Existing |
| *Element:* **Emergency Response Performance Information** | | |
| *Entity:* **Archived Data Management Subsystem** | | |
| *Functional Area:* **ITS Data Repository**<br>Collect and maintain data and data catalogs from one or more data sources. May include quality checks, error notification, and archive coordination. | | |
| *Requirement:* | 1 The center shall collect data to be archived from one or more data sources. | Existing |
| *Requirement:* | 2 The center shall collect data catalogs from one or more data sources. A catalog describes the data contained in the collection of archived data and may include descriptions of the schema or structure of the data, a description of the contents of the data; e.g., time range of entries, number of entries; or a sample of the data (e. g. a thumbnail). | Existing |
| *Requirement:* | 3 The center shall store the archived data in a focused repository that is suited to a particular set of ITS data users. | Existing |
| *Requirement:* | 4 The center shall include capabilities for performing quality checks on the incoming archived data. | Existing |
| *Requirement:* | 5 The center shall include capabilities for error notification on the incoming archived data. | Existing |
| *Requirement:* | 6 The center shall include capabilities for archive to archive coordination. | Planned |
| *Requirement:* | 8 The center shall perform quality checks on received data. | Planned |
| *Requirement:* | 9 The center shall provide the capability to execute methods on the incoming data such as cleansing, summarizations, aggregations, or transformations applied to the data before it is stored in the archive. | Existing |
| *Requirement:* | 10 The center shall respond to requests from the administrator interface function to maintain the archive data. | Existing |

| Architecture | | Status |
|---|---|---|
| **Gulf Region ITS Architecture** | | |
| *Element:* **Emergency Response Performance Information** | | |
| *Entity:* **Archived Data Management Subsystem** | | |
| *Element:* **GRPC MPO** | | |
| *Entity:* **Traffic Management** | | |
| *Functional Area:* **TMC Traffic Network Performance Evaluation** Systems to predict travel demand patterns to support traffic flow optimization, demand management, and incident management. Collects data from surveillance equipment as well as input from other management centers including emissions, event promoters, and other TMCs. | | |
| *Requirement:* | 1 The center shall monitor, analyze, and store traffic sensor data (speed, volume, occupancy) collected from field elements under remote control of the center to support overall network performance evaluations. | Existing |
| *Requirement:* | 2 The center shall collect wide-area pollution data from emissions management centers to support overall network performance evaluations. | Existing |
| *Requirement:* | 3 The center shall collect and store plans from event promoters for major future events possibly impacting traffic to support overall network performance evaluations. | Existing |
| *Requirement:* | 5 The center shall exchange information with transit management centers including details current transit routes, the level of service on each route, and the progress of individual vehicles along their routes for use in forecasting demand and estimating current transportation network performance. | Existing |
| *Requirement:* | 6 The center shall exchange traffic information with other traffic management centers, including incidents, congestion data, traffic data, signal timing plans, and real-time signal control information to support overall network performance evaluations. | Existing |
| *Requirement:* | 7 The center shall support an interface with a map update provider, or other appropriate data sources, through which updates of digitized map data can be obtained and used as a background for network performance evaluations. | Existing |
| *Element:* **GRPC MPO Databases** | | |
| *Entity:* **Archived Data Management Subsystem** | | |
| *Functional Area:* **ITS Data Repository** Collect and maintain data and data catalogs from one or more data sources. May include quality checks, error notification, and archive coordination. | | |
| *Requirement:* | 1 The center shall collect data to be archived from one or more data sources. | Existing |
| *Requirement:* | 2 The center shall collect data catalogs from one or more data sources. A catalog describes the data contained in the collection of archived data and may include descriptions of the schema or structure of the data, a description of the contents of the data; e.g., time range of entries, number of entries; or a sample of the data (e. g. a thumbnail). | Planned |
| *Requirement:* | 3 The center shall store the archived data in a focused repository that is suited to a particular set of ITS data users. | Planned |
| *Requirement:* | 4 The center shall include capabilities for performing quality checks on the incoming archived data. | Planned |

| Architecture | | Status |
|---|---|---|
| **Gulf Region ITS Architecture** | | |
| *Element:* **GRPC MPO Databases** | | |
| *Entity:* **Archived Data Management Subsystem** | | |
| *Functional Area:* **ITS Data Repository**<br>Collect and maintain data and data catalogs from one or more data sources. May include quality checks, error notification, and archive coordination. | | |
| *Requirement:* | 5 The center shall include capabilities for error notification on the incoming archived data. | Planned |
| *Requirement:* | 6 The center shall include capabilities for archive to archive coordination. | Planned |
| *Requirement:* | 7 The center shall support a broad range of archived data management implementations, ranging from simple data marts that collect a focused set of data and serve a particular user community to large-scale data warehouses that collect, integrate, and summarize transportation data from multiple sources and serve a broad array of users within a region. | Planned |
| *Requirement:* | 8 The center shall perform quality checks on received data. | Planned |
| *Requirement:* | 9 The center shall provide the capability to execute methods on the incoming data such as cleansing, summarizations, aggregations, or transformations applied to the data before it is stored in the archive. | Planned |
| *Requirement:* | 10 The center shall respond to requests from the administrator interface function to maintain the archive data. | Planned |
| *Requirement:* | 11 When data or a catalog of data is received from the archive, the center shall generate the requested data product for the users systems. | Planned |
| *Functional Area:* **Government Reporting Systems Support**<br>Selects and formats data residing in an ITS archive to facilitate local, state, and federal government data reporting requirements. | | |
| *Requirement:* | 1 The center shall provide data from an ITS archive to federal, state, or local government reporting systems. | Planned |
| *Requirement:* | 2 The center shall provide the capability to select data from an ITS archive for use in government reports. | Planned |
| *Requirement:* | 3 The center shall provide the capability to format data from an ITS archive suitable for input into government reports. | Planned |
| *Requirement:* | 4 The center shall support requests for ITS archived data from Government Reporting Systems. | Planned |
| *Requirement:* | 5 The center shall provide the applicable meta-data for any ITS archived data to satisfy government reporting system requests. Meta-data may include attributes that describe the source and quality of the data and the conditions surrounding the collection of the data. | Planned |
| *Functional Area:* **On-Line Analysis and Mining**<br>Advanced data analysis and mining features to support discovery of information, patterns, and correlations in large ITS archives. | | |
| *Requirement:* | 1 The center shall support the interface with Archive Data User Systems for requests for analysis of the archive data. | Planned |

| Architecture | | Status |
|---|---|---|
| **Gulf Region ITS Architecture** | | |
| *Element:* **GRPC MPO Databases** | | |
| *Entity:* **Archived Data Management Subsystem** | | |
| *Functional Area:* **On-Line Analysis and Mining** Advanced data analysis and mining features to support discovery of information, patterns, and correlations in large ITS archives. | | |
| *Requirement:* | 2 The center shall provide the capability to perform activities such as data mining, data fusion, summarizations, aggregations, and recreation from archive data. This may include multidimensional analysis, selective summarization and expansion of data details, and many other advanced analysis services. | Planned |
| *Requirement:* | 3 The center shall receive the user's systems requests and develop the request to retrieve the data from the archive. | Planned |
| *Requirement:* | 4 The center shall respond to users systems requests for a catalog of the archived data analysis products available. | Planned |
| *Element:* **Gulfport-Biloxi International Airport Field Equipment** | | |
| *Entity:* **Roadway Subsystem** | | |
| *Functional Area:* **Roadway Traffic Information Dissemination** Driver information systems, such as dynamic message signs and Highway Advisory Radio (HAR). | | |
| *Requirement:* | 1 The field element shall include dynamic messages signs for dissemination of traffic and other information to drivers, under center control; the DMS may be either those that display variable text messages, or those that have fixed format display(s) (e.g. vehicle restrictions, or lane open/close). | Planned |
| *Requirement:* | 4 The field element shall provide operational status for the driver information systems equipment (DMS, HAR, etc.) to the center. | Planned |
| *Requirement:* | 5 The field element shall provide fault data for the driver information systems equipment (DMS, HAR, etc.) to the center for repair. | Planned |
| *Functional Area:* **Field Barrier System Control** Field elements that control barrier systems such as gates and other systems that manage entry to roadways, transportation facilities and infrastructure. | | |
| *Requirement:* | 1 The field element shall activate barrier systems for transportation facilities and infrastructure under center control. Barrier systems include automated or remotely controlled gates, barriers and other systems that manage entry to roadways. | Planned |
| *Requirement:* | 2 The field element shall return barrier system operational status to the controlling center. | Planned |
| *Requirement:* | 3 The field element shall return barrier system fault data to the maintenance center for repair. | Planned |
| *Element:* **Gulfport-Biloxi International Airport Information System** | | |
| *Entity:* **Information Service Provider** | | |
| *Functional Area:* **ISP Traveler Data Collection** Collects traveler information from other centers, consolidates and refines the collected data, and makes this data available to traveler information applications. | | |
| *Requirement:* | 3 The center shall collect, process, and store transit routes and schedules, transit transfer options, transit fares, and real-time schedule adherence information. | Existing |

| Architecture | | Status |
|---|---|---|
| **Gulf Region ITS Architecture** | | |
| *Element:* **Gulfport-Biloxi International Airport Information System** | | |
| *Entity:* **Information Service Provider** | | |
| *Functional Area:* **ISP Traveler Data Collection** Collects traveler information from other centers, consolidates and refines the collected data, and makes this data available to traveler information applications. | | |
| *Requirement:* | 4 The center shall collect, process, and store parking information, including location, availability, and fees. | Existing |
| *Requirement:* | 6 The center shall collect, process, and store weather information. | Existing |
| *Functional Area:* **Basic Information Broadcast** Collection, processing, storage, and broadcast dissemination of traffic, transit, maintenance and construction, event, and weather information to traveler interface systems and vehicles. | | |
| *Requirement:* | 3 The center shall collect, process, store, and disseminate transit routes and schedules, transit transfer options, transit fares, and real-time schedule adherence information to travelers. | Existing |
| *Requirement:* | 4 The center shall collect, process, store, and disseminate parking information to travelers, including location, availability, and fees. | Existing |
| *Requirement:* | 6 The center shall collect, process, store, and disseminate weather information to travelers. | Existing |
| *Requirement:* | 10 The center shall provide the capability for a system operator to control the type and update frequency of broadcast traveler information. | Existing |
| *Functional Area:* **ISP Emergency Traveler Information** Collection and distribution of emergency information to the traveler public, including evacuation information and wide-area alerts. | | |
| *Requirement:* | 1 The center shall collect and provide to the traveler interface systems emergency evacuation information, including evacuation zones, shelter information, available transportation modes, road closures and detours, changes to transit services, and traffic and road conditions at the origin, destination, and along the evacuation routes. | Existing |
| *Requirement:* | 3 The center shall collect and provide wide-area alert information to the traveler interface system with region-specific data, including major emergencies such as a natural or man-made disaster, civil emergency, child abductions, severe weather watches and warnings, military activities, and law enforcement warnings. | Existing |
| *Requirement:* | 4 The center shall provide the capability for a system operator to control the type and update frequency of emergency and wide-area alert information distributed to travelers. | Existing |
| *Element:* **Gulfport-Biloxi International Airport Operations Center** | | |
| *Entity:* **Emergency Management** | | |
| *Functional Area:* **Emergency Call-Taking** Provides interface to the emergency call-taking systems such as the Emergency Telecommunications System (e.g., 911) that correlate call information with emergencies reported by transit agencies, commercial vehicle operators, or other public safety agencies. Allows the operator to verify the incident and forward the information to the responding agencies. | | |

| Architecture | | Status |
|---|---|---|
| **Gulf Region ITS Architecture** | | |
| *Element:* **Gulfport-Biloxi International Airport Operations Center** | | |
| *Entity:* **Emergency Management** | | |
| *Functional Area:* **Emergency Call-Taking** Provides interface to the emergency call-taking systems such as the Emergency Telecommunications System (e.g., 911) that correlate call information with emergencies reported by transit agencies, commercial vehicle operators, or other public safety agencies. Allows the operator to verify the incident and forward the information to the responding agencies. | | |
| *Requirement:* | 1 The center shall support the interface to the Emergency Telecommunications System (e.g. 911 or 7-digit call routing) to receive emergency notification information and provide it to the emergency system operator. | Planned |
| *Requirement:* | 5 The center shall receive emergency notification information from other public safety agencies and present the possible incident information to the emergency system operator. | Planned |
| *Requirement:* | 7 The center shall coordinate, correlate, and verify all emergency inputs, including those identified based on external calls and internal analysis of security sensor and surveillance data, and assign each a level of confidence. | Planned |
| *Requirement:* | 9 The center shall forward the verified emergency information to the responding agency based on the location and nature of the emergency. | Planned |
| *Requirement:* | 10 The center shall update the incident information log once the emergency system operator has verified the incident. | Planned |
| *Requirement:* | 11 The center shall provide the capability for digitized map data to act as the background to the emergency information presented to the emergency system operator. | Planned |
| *Functional Area:* **Emergency Early Warning System** Monitors alerting and advisory systems, information collected by ITS surveillance and sensors, and reports from other agencies in order to identify potential, imminent, or in-progress major incidents or disasters. Notification is provided to other ITS centers to notify the traveling public. | | |
| *Requirement:* | 1 The center shall monitor information from Alerting and Advisory Systems such as the Information Sharing and Analysis Centers (ISACs), the National Infrastructure Protection Center (NIPC), the Homeland Security Advisory System (HSAS), etc. The information may include assessments (general incident and vulnerability awareness information), advisories (identification of threats or recommendations to increase preparedness levels), or alerts (information on imminent or in-progress emergencies). | Existing |
| *Requirement:* | 2 The center shall provide the capability to correlate alerts and advisories, incident information, and security sensor and surveillance data. | Existing |
| *Requirement:* | 3 The center shall broadcast wide-area alerts and advisories to traffic management centers for emergency situations such as severe weather events, civil emergencies, child abduction (AMBER alert system), military activities, and other situations that pose a threat to life and property. | Existing |

| Architecture | | | Status |
|---|---|---|---|
| **Gulf Region ITS Architecture** | | | |
| *Element:* **Gulfport-Biloxi International Airport Operations Center** | | | |
| *Entity:* **Emergency Management** | | | |
| *Functional Area:* | **Emergency Early Warning System**<br>Monitors alerting and advisory systems, information collected by ITS surveillance and sensors, and reports from other agencies in order to identify potential, imminent, or in-progress major incidents or disasters. Notification is provided to other ITS centers to notify the traveling public. | | |
| *Requirement:* | 4 | The center shall broadcast wide-area alerts and advisories to transit management centers for emergency situations such as severe weather events, civil emergencies, child abduction (AMBER alert system), military activities, and other situations that pose a threat to life and property. | Existing |
| *Requirement:* | 6 | The center shall broadcast wide-area alerts and advisories to traveler information service providers for emergency situations such as severe weather events, civil emergencies, child abduction (AMBER alert system), military activities, and other situations that pose a threat to life and property. | Existing |
| *Requirement:* | 8 | The center shall broadcast wide-area alerts and advisories to other emergency management centers for emergency situations such as severe weather events, civil emergencies, child abduction (AMBER alert system), military activities, and other situations that pose a threat to life and property. | Existing |
| *Requirement:* | 9 | The center shall process status information from each of the centers that have been sent the wide-area alert. | Existing |
| *Requirement:* | 10 | The center shall coordinate the broadcast of wide-area alerts and advisories with other emergency management centers. | Existing |
| *Requirement:* | 11 | The center shall receive incident information from other transportation management centers to support the early warning system. | Existing |
| *Requirement:* | 12 | The center shall present the alert and advisory information and the status of the actions taken in response to the alert by the other centers to the emergency system operator as received from other system inputs. | Existing |
| *Requirement:* | 13 | The center shall support the entry of alert and advisory information directly from the emergency system operator. | Existing |
| *Functional Area:* | **Emergency Response Management**<br>Strategic emergency planning and response capabilities and broad inter-agency interfaces to support large-scale incidents and disasters, commonly associated with Emergency Operations Centers. | | |
| *Requirement:* | 1 | The center shall provide strategic emergency response capabilities such as that of an Emergency Operations Center for large-scale incidents and disasters. | Existing |
| *Requirement:* | 2 | The center shall manage coordinated inter-agency responses to and recovery from large-scale emergencies. Such agencies include traffic management, transit, maintenance and construction management, rail operations, and other emergency management agencies. | Existing |
| *Requirement:* | 3 | The center shall provide the capability to implement response plans and track progress through the incident by exchanging incident information and distributing response status to allied agencies. | Existing |

| Architecture | | | Status |
|---|---|---|---|
| **Gulf Region ITS Architecture** | | | |
| *Element:* **Gulfport-Biloxi International Airport Operations Center** | | | |
| *Entity:* **Emergency Management** | | | |
| *Functional Area:* | **Emergency Response Management**<br>Strategic emergency planning and response capabilities and broad inter-agency interfaces to support large-scale incidents and disasters, commonly associated with Emergency Operations Centers. | | |
| *Requirement:* | 4 | The center shall develop, coordinate with other agencies, and store emergency response plans. | Existing |
| *Requirement:* | 10 | The center shall provide the capability to request transit resource availability from transit centers for use during disaster and evacuation operations. | Existing |
| *Requirement:* | 12 | The center shall provide information to the media concerning the status of an emergency response. | Existing |
| *Requirement:* | 13 | The center shall provide the capability for digitized map data to act as the background to the information presented to the emergency system operator. | Existing |
| *Requirement:* | 14 | The center shall provide the capability for center personnel to provide inputs to the management of incidents, disasters and evacuations. | Existing |
| *Functional Area:* | **Emergency Evacuation Support**<br>Evacuation planning and coordination to manage evacuation and reentry of a population in the vicinity of a disaster or other emergency that poses a risk to public safety. | | |
| *Requirement:* | 1 | The center shall manage inter-agency coordination of evacuation operations, from initial planning through the evacuation process and reentry. | Existing |
| *Requirement:* | 2 | The center shall develop and exchange evacuation plans with allied agencies prior to the occurrence of a disaster. | Existing |
| *Requirement:* | 3 | The center shall provide an interface to the emergency system operator to enter evacuation plans and procedures and present the operator with other agencies' plans. | Existing |
| *Requirement:* | 6 | The center shall request resources from transit agencies as needed to support the evacuation. | Existing |
| *Requirement:* | 7 | The center shall request traffic management agencies to implement special traffic control strategies and to control evacuation traffic, including traffic on local streets and arterials as well as the major evacuation routes. | Existing |
| *Requirement:* | 8 | The center shall provide traveler information systems with evacuation guidance including basic information to assist potential evacuees in determining whether evacuation is necessary and when it is safe to return. | Existing |
| *Requirement:* | 9 | The center shall monitor the progress or status of the evacuation once it begins and exchange tactical plans, prepared during the incident, with allied agencies. | Existing |
| *Requirement:* | 10 | The center shall monitor the progress of the reentry process. | Existing |
| *Functional Area:* | **Emergency Environmental Monitoring**<br>Current and forecast road and weather information assimilated from weather service providers and emergency vehicles equipped with environmental sensors; used by the operator to more effectively manage incidents. | | |

| Architecture | | Status |
|---|---|---|
| **Gulf Region ITS Architecture** | | |
| *Element:* **Gulfport-Biloxi International Airport Operations Center** | | |
| *Entity:* **Emergency Management** | | |
| *Functional Area:* | **Emergency Environmental Monitoring**<br>Current and forecast road and weather information assimilated from weather service providers and emergency vehicles equipped with environmental sensors; used by the operator to more effectively manage incidents. | |
| *Requirement:* | 1 The center shall collect current and forecast road and weather information from weather service providers (such as the National Weather Service and value-added sector specific meteorological services). | Existing |
| *Requirement:* | 4 The center shall assimilate current and forecast road conditions and surface weather information to support incident management. | Existing |
| *Requirement:* | 5 The center shall present the current and forecast road and weather information to the emergency system operator. | Existing |
| *Functional Area:* | **Center Secure Area Surveillance**<br>Management of security surveillance devices and analysis of that data to detect potential threats. Areas under surveillance may include transit stops, transit stations, rest areas, park and ride lots, modal interchange facilities, on-board a transit vehicle, etc. | |
| *Requirement:* | 1 The center shall remotely monitor video images and audio surveillance data collected in secure areas including facilities (e.g. transit yards) and transportation infrastructure (e.g. bridges,<br>tunnels, interchanges, roadway infrastructure, and transit railways or guideways). The data may be raw or pre-processed | Existing |
| *Requirement:* | 2 The center shall remotely monitor video images and audio surveillance data collected in traveler secure areas, which include transit stations, transit stops, rest areas, park and ride lots, and other fixed sites along travel routes (e.g., emergency pull-off areas and travel information centers). The data may be raw or pre-processed in the field. | Planned |
| *Requirement:* | 5 The center shall identify potential security threats based on collected security surveillance data. | Existing |
| *Requirement:* | 6 The center shall verify potential security threats by correlating security surveillance data from multiple sources. | Existing |
| *Requirement:* | 7 The center shall remotely control security surveillance devices in secure areas including facilities (e.g. transit yards) and transportation infrastructure (e.g. bridges, tunnels, interchanges, roadway infrastructure, and transit railways or guideways). | Existing |
| *Requirement:* | 8 The center shall remotely control security surveillance devices in traveler secure areas, which include transit stations, transit stops, rest areas, park and ride lots, and other fixed sites along travel routes (e.g., emergency pull-off areas and travel information centers). | Planned |
| *Requirement:* | 12 The center shall respond to control data from center personnel regarding security surveillance data collection, processing, threat detection, and image matching. | Existing |
| *Functional Area:* | **Emergency Data Collection**<br>Collection and storage of information related to Emergency Management. For use by operations personnel or data archives in the region. | |

| Architecture | | Status |
|---|---|---|
| **Gulf Region ITS Architecture** | | |
| *Element:* **Gulfport-Biloxi International Airport Operations Center** | | |
| *Entity:* **Emergency Management** | | |
| *Functional Area:* **Emergency Data Collection**<br>Collection and storage of information related to Emergency Management. For use by operations personnel or data archives in the region. | | |
| *Requirement:* | 1 The center shall collect emergency service data, emergency vehicle management data, emergency vehicle data, sensor and surveillance data, threat data, and incident data. | Existing |
| *Entity:* **Traffic Management** | | |
| *Functional Area:* **TMC Traffic Information Dissemination**<br>Controls dissemination of traffic-related data to other centers, the media, and travelers via the driver information systems (DMS, HAR) that it operates. | | |
| *Requirement:* | 1 The center shall remotely control dynamic messages signs for dissemination of traffic and other information to drivers. | Planned |
| *Requirement:* | 3 The center shall collect operational status for the driver information systems equipment (DMS, HAR, etc.). | Planned |
| *Requirement:* | 4 The center shall collect fault data for the driver information systems equipment (DMS, HAR, etc.) for repair. | Planned |
| *Requirement:* | 5 The center shall retrieve locally stored traffic information, including current and forecasted traffic information, road and weather conditions, traffic incident information, information on diversions and alternate routes, closures, and special traffic restrictions (lane/shoulder use, weight restrictions, width restrictions, HOV requirements), etc. | Planned |
| *Requirement:* | 6 The center shall distribute traffic data to maintenance and construction centers, transit centers, emergency management centers, and traveler information providers. | Planned |
| *Requirement:* | 8 The center shall provide the capability for center personnel to control the nature of the data that is available to non-traffic operations centers and the media. | Planned |
| *Functional Area:* **Barrier System Management**<br>Remotely controls barrier systems such as gates and other systems that manage entry to roadways, transportation facilities and infrastructure. | | |
| *Requirement:* | 1 The center shall remotely control barrier systems for transportation facilities and infrastructure. Barrier systems include automated or remotely controlled gates, barriers and other systems that manage entry to roadways. | Planned |
| *Requirement:* | 2 The center shall collect barrier system operational status. | Planned |
| *Requirement:* | 3 The center shall collect barrier system fault data and send to the maintenance center for repair. | Planned |
| *Element:* **Gulfport-Biloxi International Airport Parking Management** | | |
| *Entity:* **Parking Management** | | |
| *Functional Area:* **Parking Management**<br>Monitor vehicles and current parking availability within parking facilities. Use driver information systems (e.g., DMS) to provide parking availability and other parking facility information to drivers. Support local traffic control coordination around the parking facility. | | |

| Architecture | | Status |
|---|---|---|
| **Gulf Region ITS Architecture** | | |
| *Element:* **Gulfport-Biloxi International Airport Parking Management** | | |
| *Entity:* **Parking Management** | | |
| *Functional Area:* **Parking Management** Monitor vehicles and current parking availability within parking facilities. Use driver information systems (e.g., DMS) to provide parking availability and other parking facility information to drivers. Support local traffic control coordination around the parking facility. | | |
| *Requirement:* | 1 The parking element shall maintain parking lot information including static information such as hours of operation, rates, location, entrance locations, capacity, type, and constraints; as well as dynamic information such as current state of the lot, occupancy, arrival rates, and departure rates. | Existing |
| *Requirement:* | 2 The parking element shall share information with a traffic management center to identify queues at entrances, exits that should be used, and other information that supports coordinated local traffic control in and around the parking facility. | Planned |
| *Requirement:* | 3 The parking element shall manage local dynamic message signs that display messages to travelers such as the parking lot state, number of spaces available, location of entrances, and current charges. | Planned |
| *Requirement:* | 4 The parking element shall provide the capability to detect, count, and classify vehicles at entrances, exits, and designated locations within a parking facility. | Planned |
| *Functional Area:* **Parking Electronic Payment** Parking payment collection using in-vehicle equipment (tags) or contact or proximity traveler cards used for electronic payment. Includes field elements | | |
| *Requirement:* | 1 The parking element shall detect and classify vehicles entering and exiting a parking facility (vehicle size, type, identifiable features, etc.). | Planned |
| *Requirement:* | 2 The parking element shall read data from the traveler card / payment instrument carried on-board the vehicle (tag) or by the traveler. | Planned |
| *Requirement:* | 3 The parking element shall provide an interface to the driver informing them of the success or failure of the financial transaction. This may involve a request for the driver to pull aside so the operator can resolve an issue. | Planned |
| *Requirement:* | 5 The parking element shall manage the parking lot charges, considering such factors as location, vehicle types, and times of day. | Planned |
| *Requirement:* | 6 The parking element shall process the financial requests and manage an interface to a Financial Institution. | Planned |
| *Requirement:* | 7 The parking element shall support the payment of parking lot transactions using data provided by the traveler cards / payment instruments. | Planned |
| *Requirement:* | 8 The parking element shall process requests for parking lot charges to be paid in advance. | Planned |
| *Requirement:* | 10 The parking element shall maintain a list of invalid traveler credit identities, or bad tag lists. | Planned |
| *Element:* **Gulfport-Biloxi International Airport Security Monitoring System** | | |

| Architecture | | Status |
|---|---|---|
| **Gulf Region ITS Architecture** | | |
| *Element:* **Gulfport-Biloxi International Airport Security Monitoring System** | | |
| *Entity:* **Remote Traveler Support** | | |
| *Functional Area:* | **Traveler Secure Area Surveillance**<br>Security surveillance devices that monitor traveler-frequented areas such as transit stops and rest stops. | |
| *Requirement:* | 1 The field element shall include video and/or audio surveillance of traveler secure areas including transit stations, transit stops, rest areas, park and ride lots, and other fixed sites along travel routes (e.g., emergency pull-off areas and traveler information centers). | Planned |
| *Requirement:* | 2 The field element shall be remotely controlled by a center. | Planned |
| *Requirement:* | 3 The field element shall provide equipment status and fault indication of surveillance equipment to a center. | Planned |
| *Requirement:* | 4 The field element shall provide raw video or audio data. | Planned |
| *Entity:* **Security Monitoring Subsystem** | | |
| *Functional Area:* | **Field Secure Area Surveillance**<br>Security surveillance devices (audio/video) that monitor facilities (e.g. transit yards) and transportation infrastructure (e.g. bridges, tunnels, interchanges, and transit railways or guideways). | |
| *Requirement:* | 1 The field element shall include video and/or audio surveillance of secure areas including facilities (e.g. transit yards) and transportation infrastructure (e.g. bridges, tunnels, interchanges, roadway infrastructure, and transit railways or guideways). | Existing |
| *Requirement:* | 2 The field element shall be remotely controlled by a center. | Existing |
| *Requirement:* | 3 The field element shall provide equipment status and fault indication of surveillance equipment to a center. | Existing |
| *Requirement:* | 4 The field element shall provide raw video or audio data. | Existing |
| *Element:* **Local City/County Databases** | | |
| *Entity:* **Archived Data Management Subsystem** | | |
| *Functional Area:* | **ITS Data Repository**<br>Collect and maintain data and data catalogs from one or more data sources. May include quality checks, error notification, and archive coordination. | |
| *Requirement:* | 1 The center shall collect data to be archived from one or more data sources. | Planned |
| *Requirement:* | 2 The center shall collect data catalogs from one or more data sources. A catalog describes the data contained in the collection of archived data and may include descriptions of the schema or structure of the data, a description of the contents of the data; e.g., time range of entries, number of entries; or a sample of the data (e. g. a thumbnail). | Planned |
| *Requirement:* | 3 The center shall store the archived data in a focused repository that is suited to a particular set of ITS data users. | Planned |
| *Requirement:* | 4 The center shall include capabilities for performing quality checks on the incoming archived data. | Planned |
| *Requirement:* | 5 The center shall include capabilities for error notification on the incoming archived data. | Planned |
| *Requirement:* | 6 The center shall include capabilities for archive to archive coordination. | Planned |

| Architecture | | | Status |
|---|---|---|---|
| **Gulf Region ITS Architecture** | | | |
| *Element:* **Local City/County Databases** | | | |
| *Entity:* **Archived Data Management Subsystem** | | | |
| *Functional Area:* | **ITS Data Repository**<br>Collect and maintain data and data catalogs from one or more data sources. May include quality checks, error notification, and archive coordination. | | |
| *Requirement:* | 8 | The center shall perform quality checks on received data. | Planned |
| *Requirement:* | 9 | The center shall provide the capability to execute methods on the incoming data such as cleansing, summarizations, aggregations, or transformations applied to the data before it is stored in the archive. | Planned |
| *Requirement:* | 10 | The center shall respond to requests from the administrator interface function to maintain the archive data. | Planned |
| *Requirement:* | 11 | When data or a catalog of data is received from the archive, the center shall generate the requested data product for the users systems. | Planned |
| *Requirement:* | 12 | For archive data requiring financial payment, the center shall process the financial requests and manage an interface to a Financial Institution. | Planned |
| *Element:* **Local City/County Public Works** | | | |
| *Entity:* **Maintenance and Construction Management** | | | |
| *Functional Area:* | **MCM Work Zone Management**<br>Remotely monitors and supports work zone activities, controlling traffic through dynamic message signs (DMS), highway advisory radio, gates and barriers, and informing other groups of activity (e.g., traveler information systems, traffic management centers, other maintenance and construction centers). | | |
| *Requirement:* | 3 | The center shall disseminate work zone information to other agencies and centers including traffic, transit, emergency management centers, other maintenance centers, traveler information providers, and the media. | Planned |
| *Requirement:* | 4 | The center shall control traffic in work zones by providing remote control of dynamic message signs, highway advisory radio systems, gates, and barriers located in or near the work zone. | Planned |
| *Requirement:* | 5 | The center shall exchange information with administrative systems to support the planning and scheduling of work zone activities. This information includes: equipment and consumables resupply purchase request status, personnel qualifications including training and special certifications, environmental regulations and rules that may impact maintenance activities, and requests and project requirements from contract administration. | Planned |
| *Functional Area:* | **MCM Work Activity Coordination**<br>Disseminates work activity schedules and current asset restrictions to other agencies. Work schedules are coordinated, factoring in the needs and activities of other agencies and adjacent jurisdictions. | | |

| Architecture | | Status |
|---|---|---|
| **Gulf Region ITS Architecture** | | |
| *Element:* **Local City/County Public Works** | | |
| *Entity:* **Maintenance and Construction Management** | | |
| *Functional Area:* **MCM Work Activity Coordination**<br>Disseminates work activity schedules and current asset restrictions to other agencies. Work schedules are coordinated, factoring in the needs and activities of other agencies and adjacent jurisdictions. | | |
| *Requirement:* | 1 The center shall provide work zone activities affecting the road network including the nature of the maintenance or construction activity, location, impact to the roadway, expected time(s) and duration of impact, anticipated delays, alternate routes, and suggested speed limits. This information may be augmented with<br>images that provide a visual indication of current work zone | Planned |
| *Requirement:* | 2 The center shall provide status information about scheduled maintenance and construction activities including anticipated closures and impact to the roadway, alternate routes, anticipated delays, closure times, and durations. The information is provided to other management centers such as traffic, emergency, transit, traveler information providers, other maintenance centers, multimodal transportation providers, rail operations, and the media. | Planned |
| *Requirement:* | 3 The center shall collect and respond to feedback concerning scheduled maintenance and construction activities with other management centers such as traffic, emergency, transit, and rail operations. | Planned |
| *Requirement:* | 4 The center shall collect and disseminate asset restriction information levied on transportation asset usage based on infrastructure design, surveys, tests, or analyses. This includes standard facility design height, width, and weight restrictions, special restrictions such as spring weight restrictions, and temporary facility restrictions that are imposed during maintenance and construction. | Planned |
| *Requirement:* | 5 The center shall exchange information with administrative systems to support the planning and scheduling of maintenance and construction activities. This information includes: equipment and consumables resupply purchase request status, personnel qualifications including training and special certifications, environmental regulations and rules that may impact maintenance activities, and requests and project requirements from contract administration. | Planned |
| *Requirement:* | 6 The center shall exchange rail schedules and work plans with rail operations centers. | Planned |
| *Functional Area:* **MCM Data Collection**<br>Collection and storage of maintenance and construction information. For use by operations personnel or data archives in the region. | | |
| *Requirement:* | 1 The center shall collect maintenance and construction data (such as field equipment status, infrastructure status, maintenance and construction activity data) gathered from roadway, traffic, and other maintenance and construction sources. | Planned |
| *Requirement:* | 2 The center shall assign quality control metrics and meta-data to be stored along with the data. Meta-data may include attributes that describe the source and quality of the data and the conditions surrounding the collection of the data. | Planned |

| Architecture | | Status |
|---|---|---|
| **Gulf Region ITS Architecture** | | |
| *Element:* **Local City/County Public Works** | | |
| *Entity:* **Maintenance and Construction Management** | | |
| *Functional Area:* **MCM Data Collection** Collection and storage of maintenance and construction information. For use by operations personnel or data archives in the region. | | |
| *Requirement:* | 3 The center shall receive and respond to requests from ITS Archives for either a catalog of the maintenance and construction data or for the data itself. | Planned |
| *Requirement:* | 4 The center shall be able to produce sample products of the data available. | Planned |
| *Requirement:* | 5 The center shall provide data to Asset Management to be used in updating the status of assets in the inventory. | Planned |
| *Element:* **Local City/County TOCs** | | |
| *Entity:* **Traffic Management** | | |
| *Functional Area:* **Collect Traffic Surveillance** Management of traffic sensors and surveillance (CCTV) equipment, and distribution of the collected information to other centers and operators. | | |
| *Requirement:* | 2 The center shall monitor, analyze, and distribute traffic images from CCTV systems under remote control of the center. | Planned |
| *Requirement:* | 4 The center shall distribute road network conditions data (raw or processed) based on collected and analyzed traffic sensor and surveillance data to other centers. | Planned |
| *Requirement:* | 5 The center shall respond to control data from center personnel regarding sensor and surveillance data collection, analysis, storage, and distribution. | Planned |
| *Requirement:* | 6 The center shall maintain a database of surveillance and sensors and the freeways, surface street and rural roadways, e.g. where they are located, to which part(s) of the network their data applies, the type of data, and the ownership of each link (that is, the agency or entity responsible for collecting and storing surveillance of the link) in the network. | Planned |
| *Requirement:* | 7 The center shall support an interface with a map update provider, or other appropriate data sources, through which updates of digitized map data can be obtained and used as a background for traffic data. | Planned |
| *Functional Area:* **TMC Signal Control** Remotely controls traffic signal controllers to implement traffic management strategies at signalized intersections based on traffic conditions, incidents, emergency vehicle preemptions, pedestrian crossings, etc. | | |
| *Requirement:* | 1 The center shall remotely control traffic signal controllers. | Existing |
| *Requirement:* | 2 The center shall accept notifications of right-of-way requests from pedestrians. | Existing |
| *Requirement:* | 3 The center shall collect traffic signal controller operational status and compare against the control information sent by the center. | Existing |
| *Requirement:* | 4 The center shall collect traffic signal controller fault data from the field. | Existing |

| Architecture | | Status |
|---|---|---|
| **Gulf Region ITS Architecture** | | |
| *Element:* **Local City/County TOCs** | | |
| *Entity:* **Traffic Management** | | |
| *Functional Area:* | **TMC Signal Control**<br>Remotely controls traffic signal controllers to implement traffic management strategies at signalized intersections based on traffic conditions, incidents, emergency vehicle preemptions, pedestrian crossings, etc. | |
| *Requirement:* | 5 The center shall implement control plans to coordinate signalized intersections, under control of center personnel, based on data from sensors and surveillance monitoring traffic conditions, incidents, emergency vehicle preemptions, the passage of commercial vehicles with unusual loads, equipment faults, pedestrian crossings, etc. | Existing |
| *Functional Area:* | **TMC Traffic Information Dissemination**<br>Controls dissemination of traffic-related data to other centers, the media, and travelers via the driver information systems (DMS, HAR) that it operates. | |
| *Requirement:* | 1 The center shall remotely control dynamic messages signs for dissemination of traffic and other information to drivers. | Planned |
| *Requirement:* | 3 The center shall collect operational status for the driver information systems equipment (DMS, HAR, etc.). | Planned |
| *Requirement:* | 4 The center shall collect fault data for the driver information systems equipment (DMS, HAR, etc.) for repair. | Planned |
| *Requirement:* | 5 The center shall retrieve locally stored traffic information, including current and forecasted traffic information, road and weather conditions, traffic incident information, information on diversions and alternate routes, closures, and special traffic restrictions (lane/shoulder use, weight restrictions, width restrictions, HOV requirements), etc. | Planned |
| *Requirement:* | 8 The center shall provide the capability for center personnel to control the nature of the data that is available to non-traffic operations centers and the media. | Planned |
| *Functional Area:* | **TMC Regional Traffic Control**<br>Coordination between traffic management centers in order to share traffic information between centers as well as control of traffic management field equipment. This may be used during incidents and special events and during day-to-day operations. | |
| *Requirement:* | 1 The center shall exchange traffic information with other traffic management centers, includes incident information, congestion data, traffic data, signal timing plans, and real-time signal control information. | Planned |
| *Requirement:* | 2 The center shall exchange traffic control information with other traffic management centers, includes remote monitoring and control of traffic management devices (e.g. signs, sensors, signals, cameras, etc.). | Planned |
| *Functional Area:* | **TMC Incident Dispatch Coordination/Communication**<br>Center-based capability to formulate an incident response that takes into account the incident potential, incident impacts, and/or resources required for incident management including proposing and facilitating the dispatch of emergency response and service vehicles as well as coordinating response with all appropriate cooperating agencies. | |

| Architecture | | Status |
|---|---|---|
| **Gulf Region ITS Architecture** | | |
| *Element:* **Local City/County TOCs** | | |
| *Entity:* **Traffic Management** | | |
| *Functional Area:* **TMC Incident Dispatch Coordination/Communication**<br>Center-based capability to formulate an incident response that takes into account the incident potential, incident impacts, and/or resources required for incident management including proposing and facilitating the dispatch of emergency response and service vehicles as well as coordinating response with all appropriate cooperating agencies. | | |
| *Requirement:* | 1 The center shall exchange alert information and status with emergency management centers. The information includes notification of a major emergency such as a natural or man-made disaster, civil emergency, or child abduction for distribution to the public. The information may include the alert originator, the nature of the emergency, the geographic area affected by the emergency, the effective time period, and information and instructions necessary for the public to respond to the alert. This may also identify specific information that should not be released to the public. | Existing |
| *Requirement:* | 2 The center shall coordinate planning for incidents with emergency management centers - including pre-planning activities for disaster response, evacuation, and recovery operations. | Existing |
| *Requirement:* | 4 The center shall exchange incident and threat information with emergency management centers as well as maintenance and construction centers; including notification of existence of incident and expected severity, location, time and nature of incident. | Existing |
| *Requirement:* | 5 The center shall respond to requests from emergency management to provide traffic management resources to implement special traffic control measures, assist in clean up, verify an incident, etc. This may also involve coordination with maintenance centers. | Existing |
| *Requirement:* | 6 The center shall receive inputs concerning upcoming events that would effect the traffic network from event promoters, traveler information service providers, media, and rail operations centers. | Existing |
| *Requirement:* | 9 The center shall coordinate information and controls with other traffic management centers. | Planned |
| *Requirement:* | 11 The center shall support an interface with a map update provider, or other appropriate data sources, through which updates of digitized map data can be obtained and used as a background for traffic incident management. | Planned |
| *Functional Area:* **TMC Evacuation Support**<br>Development, coordination, and execution of special traffic management strategies during evacuation and subsequent reentry of a population in the vicinity of a disaster or major emergency. Interfaces with emergency management and other traffic management centers. | | |
| *Requirement:* | 1 The center shall coordinate planning for evacuation with emergency management centers - including pre-planning activities such as establishing routes, areas to be evacuated, timing, etc. | Existing |

| Architecture | | Status |
|---|---|---|
| **Gulf Region ITS Architecture** | | |
| *Element:* **Local City/County TOCs** | | |
| *Entity:* **Traffic Management** | | |
| *Functional Area:* **TMC Evacuation Support**<br>Development, coordination, and execution of special traffic management strategies during evacuation and subsequent reentry of a population in the vicinity of a disaster or major emergency. Interfaces with emergency management and other traffic management centers. | | |
| *Requirement:* | 2 The center shall support requests from emergency management centers to preempt the current traffic control strategy, activate traffic control and closure systems such as gates and barriers, activate safeguard systems, or use driver information systems to support evacuation traffic control plans. | Existing |
| *Requirement:* | 3 The center shall coordinate information and controls with other traffic management centers. | Existing |
| *Requirement:* | 4 The center shall coordinate execution of evacuation strategies with emergency management centers - including activities such as setting closures and detours, establishing routes, updating areas to be evacuated, timing the process, etc. | Existing |
| *Functional Area:* **HRI Traffic Management**<br>Remotely monitor and control highway-rail intersection (HRI) equipment, includes standard speed active warning systems and high speed systems which provide additional information on approaching trains and detect and report on obstructions in the HRI. | | |
| *Requirement:* | 1 The center shall remotely control highway-rail intersection (HRI) equipment located in the field. | Planned |
| *Requirement:* | 2 The center shall accept collect highway-rail intersection (HRI) advisory or alert data from rail operations centers. | Planned |
| *Requirement:* | 3 The center shall collect highway-rail intersection (HRI) equipment operational status and compare against the control information sent by the center. | Planned |
| *Requirement:* | 4 The center shall provide the highway-rail intersection (HRI) equipment operational status to rail operations centers. | Planned |
| *Requirement:* | 5 The center shall collect incident information related to a highway-rail intersection (HRI), such as intersection blockages or crashes or equipment malfunctions. | Planned |
| *Requirement:* | 6 The center shall implement control plans to coordinate signalized intersections around highway-rail intersections (HRI), under control of center personnel, based on data from sensors and surveillance monitoring traffic conditions, incidents, equipment faults, pedestrian crossings, etc. | Planned |
| *Functional Area:* **TMC Work Zone Traffic Management**<br>Coordination with maintenance systems using work zone images and traveler information systems (such as DMS), and distribution of work plans so that work zones are established that have minimum traffic impact. | | |
| *Requirement:* | 3 The center shall remotely control driver information systems (such as dynamic messages signs, highway advisory radios) to advise drivers of activity around a work zone. | Planned |
| *Requirement:* | 4 The center shall collect operational status for the driver information systems equipment in work zones. | Planned |

| Architecture | | Status |
|---|---|---|
| **Gulf Region ITS Architecture** | | |
| *Element:* **Local City/County TOCs** | | |
| *Entity:* **Traffic Management** | | |
| *Functional Area:* | **TMC Work Zone Traffic Management**<br>Coordination with maintenance systems using work zone images and traveler information systems (such as DMS), and distribution of work plans so that work zones are established that have minimum traffic impact. | |
| *Requirement:* | 5 The center shall collect fault data for the driver information systems equipment in work zones for repair. | Planned |
| *Functional Area:* | **TMC Multimodal Coordination**<br>Provides traffic signal priority for transit vehicles based on center-to-center communications with the transit management center; also exchange traffic and transit information. | |
| *Requirement:* | 1 The center shall respond to requests from transit management centers for signal priority at one or more intersections along a particular transit route. | Planned |
| *Requirement:* | 2 The center shall exchange information with transit management centers including details current transit routes, the level of service on each route, and the progress of individual vehicles along their routes. | Planned |
| *Functional Area:* | **Traffic Data Collection**<br>Collection and storage of traffic management data. For use by operations personnel or data archives in the region. | |
| *Requirement:* | 1 The center shall collect traffic management data such as operational data, event logs, etc. | Planned |
| *Requirement:* | 2 The center shall assign quality control metrics and meta-data to be stored along with the data. Meta-data may include attributes that describe the source and quality of the data and the conditions surrounding the collection of the data. | Planned |
| *Requirement:* | 3 The center shall receive and respond to requests from ITS Archives for either a catalog of the traffic data or for the data itself. | Planned |
| *Requirement:* | 4 The center shall be able to produce sample products of the data available. | Planned |
| *Element:* **Local City/County TOCs Roadside Equipment** | | |
| *Entity:* **Roadway Subsystem** | | |
| *Functional Area:* | **Roadway Basic Surveillance**<br>Field elements that monitor traffic conditions using loop detectors and CCTV cameras. | |
| *Requirement:* | 2 The field element shall collect, process, and send traffic images to the center for further analysis and distribution. | Planned |
| *Requirement:* | 4 The field element shall return sensor and CCTV system operational status to the controlling center. | Planned |
| *Requirement:* | 5 The field element shall return sensor and CCTV system fault data to the controlling center for repair. | Planned |
| *Functional Area:* | **Roadway Signal Controls**<br>Field elements including traffic signal controllers for use at signalized intersections; also supports pedestrian crossings. | |

| Architecture | | Status |
|---|---|---|
| **Gulf Region ITS Architecture** | | |
| *Element:* **Local City/County TOCs Roadside Equipment** | | |
| *Entity:* **Roadway Subsystem** | | |
| *Functional Area:* **Roadway Signal Controls** Field elements including traffic signal controllers for use at signalized intersections; also supports pedestrian crossings. | | |
| *Requirement:* | 1 The field element shall control traffic signals at intersections and on main highways for urban and rural areas, under center control. | Existing |
| *Requirement:* | 2 The field element shall collect pedestrian images and pedestrian sensor data, and respond to pedestrian crossing requests via display, audio signal, or other manner. | Existing |
| *Requirement:* | 3 The field element shall provide the capability to notify the traffic management center that a pedestrian has requested right-of-way and when the request was or will be granted (request for right-of-way). | Existing |
| *Requirement:* | 4 The field element shall monitor operation of traffic signal controllers and report to the center any instances in which the indicator response does not match that expected from the indicator control information. | Existing |
| *Requirement:* | 5 The field element shall monitor operation of traffic signal controllers and report to the center any instances in which the indicator response does not match that expected from known indicator preemptions. | Existing |
| *Requirement:* | 6 The field element shall return traffic signal controller operational status to the controlling center. | Existing |
| *Requirement:* | 7 The field element shall return traffic signal controller fault data to the maintenance center for repair. | Existing |
| *Functional Area:* **Roadway Signal Priority** Field elements that provide the capability to receive vehicle signal priority requests and control traffic signals accordingly. | | |
| *Requirement:* | 1 The field element shall respond to requests for indicator (e.g., signal) preemption requests from emergency vehicles at intersections, pedestrian crossings, and multimodal crossings. | Existing |
| *Requirement:* | 2 The field element shall respond to requests for indicator (e.g., signal) priority requests from transit vehicles at intersections, pedestrian crossings, and multimodal crossings. | Planned |
| *Requirement:* | 3 The field element shall notify controlling traffic management center and maintenance center that the signal timing has changed based on a signal preemption/priority request to help those centers determine whether a fault detected at the signal is a true malfunction or due to a signal override. | Existing |
| *Functional Area:* **Roadway Traffic Information Dissemination** Driver information systems, such as dynamic message signs and Highway Advisory Radio (HAR). | | |
| *Requirement:* | 1 The field element shall include dynamic messages signs for dissemination of traffic and other information to drivers, under center control; the DMS may be either those that display variable text messages, or those that have fixed format display(s) (e.g. vehicle restrictions, or lane open/close). | Planned |
| *Requirement:* | 4 The field element shall provide operational status for the driver information systems equipment (DMS, HAR, etc.) to the center. | Planned |

| Architecture | | Status |
|---|---|---|
| **Gulf Region ITS Architecture** | | |
| *Element:* **Local City/County TOCs Roadside Equipment** | | |
| *Entity:* **Roadway Subsystem** | | |
| *Functional Area:* | **Roadway Traffic Information Dissemination**<br>Driver information systems, such as dynamic message signs and Highway Advisory Radio (HAR). | |
| *Requirement:* | 5 The field element shall provide fault data for the driver information systems equipment (DMS, HAR, etc.) to the center for repair. | Planned |
| *Functional Area:* | **Standard Rail Crossing**<br>Field elements at highway-rail intersections (HRIs) where operational requirements do not dictate advanced features (e.g., where rail operational speeds are less than 80 miles per hour). Includes traditional HRI warning systems augmented with other standard traffic management devices. | |
| *Requirement:* | 1 The field element shall collect and process, traffic sensor data in the vicinity of a highway-rail intersection (HRI). | Planned |
| *Requirement:* | 2 The field element shall monitor the status of the highway-rail intersection (HRI) equipment, including both the current state and mode of operation and the current equipment condition, to be forwarded on to the traffic management center. | Planned |
| *Requirement:* | 3 The field element shall monitor the status of the highway-rail intersection (HRI) equipment, including both the current state and mode of operation and the current equipment condition, to be forwarded on to the rail wayside equipment. | Planned |
| *Requirement:* | 4 The field element shall receive track status from the rail wayside equipment that can be passed on to the traffic management center. This may include the current status of the tracks and whether a train is approaching. | Planned |
| *Requirement:* | 8 The field element shall support the integrated control of adjacent traffic signals to clear an area in advance of an approaching train and to manage traffic around the intersection. | Planned |
| *Functional Area:* | **Roadway Equipment Coordination**<br>Field elements that control and send data to other field elements (such as environmental sensors that send data to a DMS or coordination between traffic controllers on adjacent intersections), without center control. | |
| *Requirement:* | 1 The field element shall include sensors (such as traffic, environmental, and work zone intrusion detection sensors) that provide data and status information to other field element devices (such as dynamic message signs, ramp meters, traffic signals, work zone intrusion alert systems), without center control. | Existing |
| *Requirement:* | 2 The field element shall include sensors (such as traffic, environmental, and work zone intrusion detection sensors) that receive control information from other field element devices, without center control. | Existing |
| *Requirement:* | 3 The field element shall include devices (such as arterial or freeway controllers, roadway automated treatment systems, barrier and safeguard systems, emissions or pollution systems, and work zone intrusion alert systems) that provide data and status information to other field element devices (such as dynamic message signs, traffic controllers on adjacent intersections), without center control. | Existing |

| Architecture | | Status |
|---|---|---|
| **Gulf Region ITS Architecture** | | |
| *Element:* **Local City/County TOCs Roadside Equipment** | | |
| *Entity:* **Roadway Subsystem** | | |
| *Functional Area:* | **Roadway Equipment Coordination**<br>Field elements that control and send data to other field elements (such as environmental sensors that send data to a DMS or coordination between traffic controllers on adjacent intersections), without center control. | |
| *Requirement:* | 4 The field element shall include devices (such as arterial or freeway controllers, roadway automated treatment systems, barrier and safeguard systems, emissions or pollution systems, and work zone intrusion alert systems) that receive control information from other field element devices, without center control. | Existing |
| *Functional Area:* | **Roadway Work Zone Traffic Control**<br>Field elements in maintenance and construction areas including CCTV cameras, driver information systems (such as DMS), and gates/barriers that monitor and control traffic and provide information directly to drivers in affected areas. | |
| *Requirement:* | 2 Under traffic and maintenance center control, the field element shall include driver information systems (such as dynamic messages signs and highway advisory radios) that advise drivers of activity around the work zone through which they are currently passing. | Planned |
| *Requirement:* | 5 The field element shall provide operational status for the surveillance (e.g. CCTV), driver information systems, and gates/barriers in work zones to the maintenance center. | Planned |
| *Requirement:* | 6 The field element shall provide fault data for the surveillance (e.g. CCTV), driver information systems, and gates/barriers in work zones to the maintenance center for repair. | Planned |
| *Element:* **MDOT Accident Database** | | |
| *Entity:* **Archived Data Management Subsystem** | | |
| *Functional Area:* | **ITS Data Repository**<br>Collect and maintain data and data catalogs from one or more data sources. May include quality checks, error notification, and archive coordination. | |
| *Requirement:* | 1 The center shall collect data to be archived from one or more data sources. | Existing |
| *Requirement:* | 2 The center shall collect data catalogs from one or more data sources. A catalog describes the data contained in the collection of archived data and may include descriptions of the schema or structure of the data, a description of the contents of the data; e.g., time range of entries, number of entries; or a sample of the data (e. g. a thumbnail). | Existing |
| *Requirement:* | 3 The center shall store the archived data in a focused repository that is suited to a particular set of ITS data users. | Existing |
| *Requirement:* | 4 The center shall include capabilities for performing quality checks on the incoming archived data. | Existing |
| *Requirement:* | 5 The center shall include capabilities for error notification on the incoming archived data. | Existing |
| *Requirement:* | 6 The center shall include capabilities for archive to archive coordination. | Existing |

| Architecture | | | Status |
|---|---|---|---|
| **Gulf Region ITS Architecture** | | | |
| *Element:* **MDOT Accident Database** | | | |
| *Entity:* **Archived Data Management Subsystem** | | | |
| *Functional Area:* | **ITS Data Repository**<br>Collect and maintain data and data catalogs from one or more data sources. May include quality checks, error notification, and archive coordination. | | |
| *Requirement:* | 7 | The center shall support a broad range of archived data management implementations, ranging from simple data marts that collect a focused set of data and serve a particular user community to large-scale data warehouses that collect, integrate, and summarize transportation data from multiple sources and serve a broad array of users within a region. | Existing |
| *Requirement:* | 8 | The center shall perform quality checks on received data. | Existing |
| *Requirement:* | 9 | The center shall provide the capability to execute methods on the incoming data such as cleansing, summarizations, aggregations, or transformations applied to the data before it is stored in the archive. | Existing |
| *Requirement:* | 10 | The center shall respond to requests from the administrator interface function to maintain the archive data. | Existing |
| *Requirement:* | 11 | When data or a catalog of data is received from the archive, the center shall generate the requested data product for the users systems. | Existing |
| *Functional Area:* | **Government Reporting Systems Support**<br>Selects and formats data residing in an ITS archive to facilitate local, state, and federal government data reporting requirements. | | |
| *Requirement:* | 1 | The center shall provide data from an ITS archive to federal, state, or local government reporting systems. | Planned |
| *Requirement:* | 2 | The center shall provide the capability to select data from an ITS archive for use in government reports. | Planned |
| *Requirement:* | 3 | The center shall provide the capability to format data from an ITS archive suitable for input into government reports. | Planned |
| *Requirement:* | 4 | The center shall support requests for ITS archived data from Government Reporting Systems. | Planned |
| *Requirement:* | 5 | The center shall provide the applicable meta-data for any ITS archived data to satisfy government reporting system requests. Meta-data may include attributes that describe the source and quality of the data and the conditions surrounding the collection of the data. | Planned |
| *Functional Area:* | **On-Line Analysis and Mining**<br>Advanced data analysis and mining features to support discovery of information, patterns, and correlations in large ITS archives. | | |
| *Requirement:* | 1 | The center shall support the interface with Archive Data User Systems for requests for analysis of the archive data. | Planned |
| *Requirement:* | 2 | The center shall provide the capability to perform activities such as data mining, data fusion, summarizations, aggregations, and recreation from archive data. This may include multidimensional analysis, selective summarization and expansion of data details, and many other advanced analysis services. | Planned |
| *Requirement:* | 3 | The center shall receive the user's systems requests and develop the request to retrieve the data from the archive. | Planned |

| Architecture | | Status |
|---|---|---|
| **Gulf Region ITS Architecture** | | |
| *Element:* **MDOT Accident Database** | | |
| *Entity:* **Archived Data Management Subsystem** | | |
| *Functional Area:* **On-Line Analysis and Mining**<br>Advanced data analysis and mining features to support discovery of information, patterns, and correlations in large ITS archives. | | |
| *Requirement:* | 4 The center shall respond to users systems requests for a catalog of the archived data analysis products available. | Planned |
| *Element:* **MDOT CVISN Credentialing Infrastructure System** | | |
| *Entity:* **Archived Data Management Subsystem** | | |
| *Functional Area:* **ITS Data Repository**<br>Collect and maintain data and data catalogs from one or more data sources. May include quality checks, error notification, and archive coordination. | | |
| *Requirement:* | 1 The center shall collect data to be archived from one or more data sources. | Existing |
| *Requirement:* | 2 The center shall collect data catalogs from one or more data sources. A catalog describes the data contained in the collection of archived data and may include descriptions of the schema or structure of the data, a description of the contents of the data; e.g., time range of entries, number of entries; or a sample of the data (e. g. a thumbnail). | Existing |
| *Requirement:* | 3 The center shall store the archived data in a focused repository that is suited to a particular set of ITS data users. | Existing |
| *Requirement:* | 4 The center shall include capabilities for performing quality checks on the incoming archived data. | Existing |
| *Requirement:* | 5 The center shall include capabilities for error notification on the incoming archived data. | Existing |
| *Requirement:* | 6 The center shall include capabilities for archive to archive coordination. | Existing |
| *Requirement:* | 7 The center shall support a broad range of archived data management implementations, ranging from simple data marts that collect a focused set of data and serve a particular user community to large-scale data warehouses that collect, integrate, and summarize transportation data from multiple sources and serve a broad array of users within a region. | Existing |
| *Requirement:* | 8 The center shall perform quality checks on received data. | Existing |
| *Requirement:* | 9 The center shall provide the capability to execute methods on the incoming data such as cleansing, summarizations, aggregations, or transformations applied to the data before it is stored in the archive. | Existing |
| *Requirement:* | 10 The center shall respond to requests from the administrator interface function to maintain the archive data. | Existing |
| *Requirement:* | 11 When data or a catalog of data is received from the archive, the center shall generate the requested data product for the users systems. | Existing |
| *Requirement:* | 12 For archive data requiring financial payment, the center shall process the financial requests and manage an interface to a Financial Institution. | Existing |
| *Entity:* **Commercial Vehicle Administration** | | |

| Architecture | | Status |
|---|---|---|
| **Gulf Region ITS Architecture** | | |
| *Element:* **MDOT CVISN Credentialing Infrastructure System** | | |
| *Entity:* **Commercial Vehicle Administration** | | |
| *Functional Area:* **Credentials and Taxes Administration** Manage electronic filing of credentials and tax filing for commercial vehicle operators. Provides commercial vehicle (including HAZMAT) route restrictions. | | |
| *Requirement:* | 1 The center shall manage electronic credentials filing and processing for commercial vehicles. | Existing |
| *Requirement:* | 2 The center shall manage the filing of appropriate taxes for the operation of commercial vehicles. | Existing |
| *Requirement:* | 3 The center shall process requests for payments of electronic credentials and tax filing and maintain an interface to a Financial Institution. | Existing |
| *Requirement:* | 4 The center shall exchange credentials and tax information with other commercial vehicle administration centers - either in other states or the federal government. | Existing |
| *Requirement:* | 5 The center shall provide route restrictions information, including hazmat restrictions, to other centers and agencies for distribution to commercial vehicle operators. These centers and agencies may include commercial fleet and freight management operators, traveler information centers, digital map update providers, and other commercial vehicle administration centers. | Existing |
| *Requirement:* | 6 The center shall use information on asset restrictions received from maintenance centers to develop the commercial vehicle route restrictions and process credentials applications. | Existing |
| *Requirement:* | 7 The center shall provide an interface with commercial vehicle fleet and freight management centers to exchange audit and compliance review reports. | Existing |
| *Requirement:* | 8 The center shall provide credentials information about commercial vehicle operators and carriers to authorized requestors such as insurance agencies. | Existing |
| *Requirement:* | 9 The center shall receive and store information on commercial vehicle violations from enforcement agencies as part of the processing of credentials applications. | Existing |
| *Functional Area:* **CV Safety Administration** Provides commercial vehicle safety criteria to roadside check facilities, collects and reviews safety data from the field and distributes safety information to other centers, carriers, and enforcement agencies. | | |
| *Requirement:* | 1 The center shall provide commercial vehicle safety data to roadside check facilities. | Existing |
| *Requirement:* | 2 The center shall collect and review safety inspection reports and violations from the roadside check facilities and pass on appropriate portions to other commercial vehicle administrative centers and commercial vehicle fleet operators. | Existing |
| *Requirement:* | 3 The center shall notify enforcement agencies of commercial vehicle safety violations by individual commercial vehicles, drivers, or carriers. | Existing |
| *Functional Area:* **CV Information Exchange** | | |

| Architecture | | Status |
|---|---|---|
| **Gulf Region ITS Architecture** | | |
| *Element:* **MDOT CVISN Credentialing Infrastructure System** | | |
| *Entity:* **Commercial Vehicle Administration** | | |
| *Functional Area:* **CV Information Exchange** Exchange information concerning safety, credentialing, and operations of commercial vehicles between the center and the roadside check stations, across jurisdictions, with fleet operators, enforcement agencies, and other information requestors. | | |
| *Requirement:* | 1 The center shall exchange information with roadside check facilities, including credentials and credentials status information, safety status information, daily site activity data, and citations. | Existing |
| *Requirement:* | 2 The center shall exchange safety and credentials data among other commercial vehicle administration centers; includes border clearance status, credentials information, credentials status information, and safety status information. | Existing |
| *Requirement:* | 3 The center shall package data concerning commercial vehicle safety and credentials into snapshots (top-level summary and critical status information). | Existing |
| *Requirement:* | 4 The center shall package data concerning commercial vehicle safety and credentials into profiles (detailed and historical data). | Existing |
| *Requirement:* | 5 The center shall provide commercial vehicle accident reports and citations to enforcement agencies. | Existing |
| *Requirement:* | 6 The center shall provide commercial vehicle credentials and safety status information to authorized requestors such as insurance agencies. | Existing |
| *Requirement:* | 7 The center shall provide reports to the commercial vehicle fleet manager regarding fleet activity through roadside facilities including accident reports, citations, credentials status information, and safety status information. | Existing |
| *Functional Area:* **CV Data Collection** Collects and stores information related to Commercial Vehicle Operations. For use by operations personnel or data archives in the region. | | |
| *Requirement:* | 1 The center shall receive operational data from the roadside check systems as well as administration and credentials data. | Existing |
| *Requirement:* | 2 The center shall assign quality control metrics and meta-data to be stored along with the data. Meta-data may include attributes that describe the source and quality of the data and the conditions surrounding the collection of the data. | Existing |
| *Requirement:* | 3 The center shall receive and respond to requests from ITS Archives for either a catalog of the commercial vehicle operations data or for the data itself. | Existing |
| *Requirement:* | 4 The center shall be able to produce sample products of the data available. | Existing |
| *Element:* **MDOT District 6 Drawbridge Systems** | | |
| *Entity:* **Roadway Subsystem** | | |
| *Functional Area:* **Multimodal Crossing Control** Field elements to monitor and control traffic at multimodal crossings, such as draw bridges and other crossings between highway traffic and other modes; does not include highway-rail intersection. | | |

| Architecture | | Status |
|---|---|---|
| **Gulf Region ITS Architecture** | | |
| *Element:* **MDOT District 6 Drawbridge Systems** | | |
| *Entity:* **Roadway Subsystem** | | |
| *Functional Area:* | **Multimodal Crossing Control**<br>Field elements to monitor and control traffic at multimodal crossings, such as draw bridges and other crossings between highway traffic and other modes; does not include highway-rail intersection. | |
| *Requirement:* | 1 The field element shall include sensors to monitor requests from non-highway traffic to cross at multimodal crossings for specified durations (such as draw bridges and miscellaneous other interference crossings between highway traffic and other modes such as river traffic, aircraft, etc.); the sensors are under center control. | Planned |
| *Requirement:* | 2 The field element shall include signals to control traffic at multimodal crossings on surface streets, under center control. | Planned |
| *Requirement:* | 3 The field element shall include driver information systems (such as dynamic messages signs, highway advisory radios (HAR), and equipment that controls warning lights and gates) that advise drivers at multimodal crossings, under center control. | Planned |
| *Requirement:* | 4 The field element shall provide operational status for the sensors, signals, and driver information systems equipment at multimodal crossings to the center. | Planned |
| *Requirement:* | 5 The field element shall provide fault data for the sensors, signals, and driver information systems equipment at multimodal crossings to the center for repair. | Planned |
| *Requirement:* | 6 The field element shall forward all requests for right-of-way at multimodal crossings to the controlling center. | Planned |
| *Element:* **MDOT District 6 Fog Detection Systems** | | |
| *Entity:* **Roadway Subsystem** | | |
| *Functional Area:* | **Roadway Environmental Monitoring**<br>Environmental sensors, surface and sub-surface, that collect weather and road surface information. Weather conditions measured include temperature, wind, humidity, precipitation, and visibility. Sensors measure road surface temperature, moisture, icing, salinity, etc. | |
| *Requirement:* | 2 The field element shall include environmental sensors that measure weather conditions including temperature, wind, humidity, precipitation, and visibility. | Planned |
| *Requirement:* | 3 The field element's environmental sensors shall be remotely controlled by a maintenance center. | Planned |
| *Requirement:* | 4 The field element's environmental sensors shall be remotely controlled by a traffic management center. | Planned |
| *Requirement:* | 7 The field element shall provide environmental sensor equipment operational status to the controlling center or maintenance vehicle. | Planned |
| *Requirement:* | 8 The field element shall provide environmental sensor equipment fault indication to the controlling center or maintenance vehicle. | Planned |
| *Requirement:* | 10 The field element shall provide weather and road surface condition data to centers. | Planned |
| *Element:* **MDOT District 6 Highway Advisory Radio** | | |
| *Entity:* **Roadway Subsystem** | | |

| Architecture | | Status |
|---|---|---|
| **Gulf Region ITS Architecture** | | |
| *Element:* **MDOT District 6 Highway Advisory Radio** | | |
| *Entity:* **Roadway Subsystem** | | |
| *Functional Area:* | **Roadway Traffic Information Dissemination**<br>Driver information systems, such as dynamic message signs and Highway Advisory Radio (HAR). | |
| *Requirement:* | 2 The field element shall include driver information systems that communicate directly from a center to the vehicle radio (such as Highway Advisory Radios) for dissemination of traffic and other information to drivers, under center control. | Planned |
| *Requirement:* | 4 The field element shall provide operational status for the driver information systems equipment (DMS, HAR, etc.) to the center. | Planned |
| *Requirement:* | 5 The field element shall provide fault data for the driver information systems equipment (DMS, HAR, etc.) to the center for repair. | Planned |
| *Functional Area:* | **Roadway Work Zone Traffic Control**<br>Field elements in maintenance and construction areas including CCTV cameras, driver information systems (such as DMS), and gates/barriers that monitor and control traffic and provide information directly to drivers in affected areas. | |
| *Requirement:* | 2 Under traffic and maintenance center control, the field element shall include driver information systems (such as dynamic messages signs and highway advisory radios) that advise drivers of activity around the work zone through which they are currently passing. | Planned |
| *Requirement:* | 5 The field element shall provide operational status for the surveillance (e.g. CCTV), driver information systems, and gates/barriers in work zones to the maintenance center. | Planned |
| *Requirement:* | 6 The field element shall provide fault data for the surveillance (e.g. CCTV), driver information systems, and gates/barriers in work zones to the maintenance center for repair. | Planned |
| *Element:* **MDOT District 6 Highway Service Patrol Vehicles** | | |
| *Entity:* **Emergency Vehicle Subsystem** | | |
| *Functional Area:* | **On-board EV En Route Support**<br>On-board systems for gathering of dispatch and routing information for emergency vehicle personnel, vehicle tracking, communications with care facilities, and signal preemption via short range communication directly with traffic control equipment at the roadside. | |
| *Requirement:* | 1 The emergency vehicle, including roadway service patrols, shall compute the location of the emergency vehicle based on inputs from a vehicle location determination function. | Planned |
| *Requirement:* | 2 The emergency vehicle, including roadway service patrols, shall send the vehicle's location and operational data to the center for emergency management and dispatch. | Planned |
| *Requirement:* | 3 The emergency vehicle, including roadway service patrols, shall receive incident details and a suggested route when dispatched to a scene. | Planned |
| *Requirement:* | 6 The emergency vehicle shall provide the personnel on-board with dispatch information, including incident type and location, and forward an acknowledgment from personnel to the center that the vehicle is on its way to the incident scene. | Planned |

| Architecture | | Status |
|---|---|---|
| **Gulf Region ITS Architecture** | | |
| *Element:* **MDOT District 6 Highway Service Patrol Vehicles** | | |
| *Entity:* **Emergency Vehicle Subsystem** | | |
| *Functional Area:* | **On-board EV Incident Management Communication**<br>On-board systems provide communications support to first responders. Incident information is provided to dispatched emergency personnel. Emergency personnel transmit information about the incident and response status. | |
| *Requirement:* | 1 The emergency vehicle shall receive dispatch instructions sufficient to enable emergency personnel in the field to implement an effective incident response. It includes local traffic, road, and weather conditions, hazardous material information, and the current status of resources that have been allocated to an incident. | Planned |
| *Requirement:* | 2 The emergency vehicle shall provide an interface to the center for emergency personnel to transmit information about the incident site such as the extent of injuries, identification of vehicles and people involved, hazardous material, etc. | Planned |
| *Requirement:* | 3 The emergency vehicle shall provide an interface to the center for emergency personnel to transmit information about the current incident response status such as the identification of the resources on site, site management strategies in effect, and current clearance status. | Planned |
| *Element:* **MDOT District 6 Maintenance and Construction Field Devices** | | |
| *Entity:* **Roadway Subsystem** | | |
| *Functional Area:* | **Roadway Work Zone Traffic Control**<br>Field elements in maintenance and construction areas including CCTV cameras, driver information systems (such as DMS), and gates/barriers that monitor and control traffic and provide information directly to drivers in affected areas. | |
| *Requirement:* | 1 The field element shall collect, process, and send work zone images to the center for further analysis and distribution, under center control. | Planned |
| *Requirement:* | 2 Under traffic and maintenance center control, the field element shall include driver information systems (such as dynamic messages signs and highway advisory radios) that advise drivers of activity around the work zone through which they are currently passing. | Planned |
| *Requirement:* | 3 Under the control of field personnel within maintenance vehicles, the field element shall include driver information systems (such as dynamic messages signs and highway advisory radios) that advise drivers of activity around a work zone through which they are currently passing. | Planned |
| *Requirement:* | 5 The field element shall provide operational status for the surveillance (e.g. CCTV), driver information systems, and gates/barriers in work zones to the maintenance center. | Planned |
| *Requirement:* | 6 The field element shall provide fault data for the surveillance (e.g. CCTV), driver information systems, and gates/barriers in work zones to the maintenance center for repair. | Planned |
| *Element:* **MDOT District 6 Maintenance and Construction Offices** | | |
| *Entity:* **Maintenance and Construction Management** | | |
| *Functional Area:* | **MCM Vehicle Tracking** | |

| Architecture | | Status |
|---|---|---|
| **Gulf Region ITS Architecture** | | |
| *Element:* **MDOT District 6 Maintenance and Construction Offices** | | |
| *Entity:* **Maintenance and Construction Management** | | |
| *Functional Area:* | **MCM Vehicle Tracking**<br>Remotely tracks the location of maintenance and construction vehicles and other equipment; presented to the center personnel. | |
| *Requirement:* | 1 The center shall monitor the locations of all maintenance and construction vehicles and other equipment under its jurisdiction. | Planned |
| *Requirement:* | 2 The center shall present location data to center personnel for the fleet of maintenance and construction vehicles and other equipment. | Planned |
| *Requirement:* | 3 The center shall support an interface with a map update provider, or other appropriate data sources, through which updates of digitized map data can be obtained and used as a background for maintenance and construction vehicle tracking. | Planned |
| *Functional Area:* | **MCM Vehicle and Equipment Maintenance Management**<br>Monitors vehicle and equipment condition, tracks maintenance history, and schedules routine and corrective maintenance. | |
| *Requirement:* | 1 The center shall collect and analyze vehicle diagnostics information from maintenance and construction vehicles. The information includes engine temperature, mileage, tire wear, brake wear, belt wear, and any warnings or alarms concerning the operational condition of the vehicle and ancillary equipment. | Existing |
| *Requirement:* | 2 The center shall exchange information with equipment repair facilities including status and history of repairs concerning maintenance and construction vehicles. This information includes vehicle status and diagnostic information, vehicle utilization, and coordination of when vehicles will be available for preventative and corrective maintenance. | Existing |
| *Requirement:* | 3 The center shall schedule preventive and corrective vehicle maintenance with the equipment repair facility based on fleet health reports, maintenance records, vehicle utilization and vehicle availability schedules. | Existing |
| *Functional Area:* | **MCM Environmental Information Collection**<br>Remotely controls environmental sensors and assimilates collected data with other current and forecast road conditions and surface weather information from weather service providers and transportation operations. | |
| *Requirement:* | 1 The center shall remotely control environmental sensors that measure road surface temperature, moisture, icing, salinity, and other measures. | Planned |
| *Requirement:* | 2 The center shall remotely control environmental sensors that measure weather conditions including temperature, wind, humidity, precipitation, and visibility. | Planned |
| *Requirement:* | 4 The center shall assimilate current and forecast road conditions and surface weather information using a combination of weather service provider information (such as the National Weather Service and value-added sector specific meteorological services), data from traffic, emergency, and transit management, traveler information providers, and environmental data collected from sensors deployed on and about the roadway as well as the fleet of maintenance and construction vehicles. | Planned |

| Architecture | | Status |
|---|---|---|
| **Gulf Region ITS Architecture** | | |
| *Element:* **MDOT District 6 Maintenance and Construction Offices** | | |
| *Entity:* **Maintenance and Construction Management** | | |
| *Functional Area:* **MCM Environmental Information Collection** Remotely controls environmental sensors and assimilates collected data with other current and forecast road conditions and surface weather information from weather service providers and transportation operations. | | |
| *Requirement:* | 5 The center shall provide weather and road condition information to weather service providers and center personnel. | Planned |
| *Requirement:* | 6 The center shall respond to control data from center personnel regarding environmental sensor control and weather data collection and processing. | Planned |
| *Requirement:* | 7 The center shall collect operational status for the roadside and vehicle-based environmental sensor equipment. | Planned |
| *Requirement:* | 8 The center shall collect fault data for the roadside and vehicle-based environmental sensor equipment for repair. | Planned |
| *Functional Area:* **MCM Environmental Information Processing** Processes current and forecast weather data, road condition information, local environmental data, and uses internal models to develop specialized detailed forecasts of local weather and surface conditions. Disseminates road | | |
| *Requirement:* | 1 The center shall respond to control data from center personnel regarding environmental sensor control and weather data collection and processing. | Planned |
| *Requirement:* | 2 The center shall assimilate current and forecast road conditions and surface weather information using a combination of weather service provider information (such as the National Weather Service and value-added sector specific meteorological services) and local environmental sensor data. | Planned |
| *Requirement:* | 3 The center shall use the various data inputs of environmental sensors and road weather data to develop a view of current and predicted road weather and road conditions. | Planned |
| *Requirement:* | 4 The center shall disseminate current and forecasted road weather and road condition information to weather service providers (such as the National Weather Service and value-added sector specific meteorological services) as well as other agencies including traffic, emergency, and transit management, traveler information providers, rail operations centers, media, and other maintenance management centers. | Planned |
| *Requirement:* | 5 The center shall provide value-added sector specific meteorological services with information on basic road facility and treatment information that supports forecasts for road conditions. | Planned |
| *Functional Area:* **MCM Incident Management** Supports coordinated response to incidents - share incident notifications, manage incident response resources, and coordinate overall incident situation and response among allied response organizations. | | |
| *Requirement:* | 1 The center shall receive inputs from the Alerting and Advisory System concerning the possibility or occurrence of severe weather, terrorist activity, or other major emergency, including information provided by the Emergency Alert System. | Existing |

| Architecture | | Status |
|---|---|---|
| **Gulf Region ITS Architecture** | | |
| *Element:* **MDOT District 6 Maintenance and Construction Offices** | | |
| *Entity:* **Maintenance and Construction Management** | | |
| *Functional Area:* **MCM Incident Management**<br>Supports coordinated response to incidents - share incident notifications, manage incident response resources, and coordinate overall incident situation and response among allied response organizations. | | |
| *Requirement:* | 2 The center shall exchange alert information and status with emergency management centers. The information includes notification of a major emergency such as a natural or man-made disaster, civil emergency, or child abduction. The information may include the alert originator, the nature of the emergency, the geographic area affected by the emergency, the effective time period, etc. | Existing |
| *Requirement:* | 3 The center shall exchange incident and threat information with emergency management centers as well as traffic management centers; including notification of existence of incident and expected severity, location, time and nature of incident. | Existing |
| *Requirement:* | 4 The center shall coordinate planning for incidents with emergency management centers - including pre-planning activities for disaster response, evacuation, and recovery operations. | Existing |
| *Requirement:* | 5 The center shall respond to requests from emergency management to provide maintenance and construction resources to implement response plans, assist in clean up, verify an incident, etc. This may also involve coordination with traffic management centers and other maintenance centers. | Existing |
| *Requirement:* | 6 The center shall exchange road network status assessment information with emergency management and traffic management centers including an assessment of damage sustained by the road network including location and extent of the damage, estimate of remaining capacity, required closures, alternate routes, necessary restrictions, and time frame for repair and recovery. | Existing |
| *Requirement:* | 7 The center shall provide work zone activities affecting the road network including the nature of the maintenance or construction activity, location, impact to the roadway, expected time(s) and duration of impact, anticipated delays, alternate routes, and suggested speed limits. This information may be augmented with<br>images that provide a visual indication of current work zone | Existing |
| *Requirement:* | 8 The center shall receive information indicating the damage sustained by transportation assets, derived from aerial surveillance, field reports, inspections, tests, and analyses to support incident management. | Existing |
| *Functional Area:* **MCM Roadway Maintenance and Construction**<br>Overall management and support for routine maintenance on the roadway or right-of-way. Includes landscape maintenance, hazard removal (roadway debris, dead animals), routine maintenance activities (roadway cleaning, grass cutting), and repair and maintenance of both ITS and non-ITS equipment. | | |

| Architecture | | Status |
|---|---|---|
| **Gulf Region ITS Architecture** | | |
| *Element:* **MDOT District 6 Maintenance and Construction Offices** | | |
| *Entity:* **Maintenance and Construction Management** | | |
| *Functional Area:* **MCM Roadway Maintenance and Construction**<br>Overall management and support for routine maintenance on the roadway or right-of-way. Includes landscape maintenance, hazard removal (roadway debris, dead animals), routine maintenance activities (roadway cleaning, grass cutting), and repair and maintenance of both ITS and non-ITS equipment. | | |
| *Requirement:* | 1 The center shall maintain an interface with asset management systems to track the inventory, restrictions, repair needs and status updates of transportation assets (pavement, bridges, signs, etc.) including location, installation and materials information, vendor/contractor, current maintenance status, standard height, width, and weight restrictions. | Existing |
| *Requirement:* | 2 The center shall respond to requests from emergency management and traffic management centers for hazard removal, field equipment repair, and other roadway maintenance. | Existing |
| *Requirement:* | 3 The center shall exchange information with administrative systems to support the planning and scheduling of maintenance activities. This information includes: equipment and consumables resupply purchase request status, personnel qualifications including training and special certifications, environmental regulations and rules that may impact maintenance activities, and requests and project requirements from contract administration. | Existing |
| *Requirement:* | 4 The center shall provide emergency management and traffic management centers with information about scheduled maintenance and construction work activities including anticipated closures and impact to the roadway, alternate routes, anticipated delays, closure times, and durations. | Existing |
| *Requirement:* | 6 The center shall collect the status and fault data from traffic management centers, including data for traffic, infrastructure, and environmental sensors, highway advisory radio and dynamic message signs, automated roadway treatment systems, barrier and safeguard systems, cameras, traffic signals and override equipment, ramp meters, beacons, security sensors and surveillance equipment, etc., and provide a cohesive view of equipment repair needs. | Existing |
| *Requirement:* | 8 The center shall receive equipment availability and materials storage status information from storage facilities to support the scheduling of roadway maintenance and construction activities. | Existing |
| *Requirement:* | 9 The center shall support an interface with a map update provider, or other appropriate data sources, through which updates of digitized map data can be obtained and used as a background for the scheduling of roadway maintenance and construction activities. | Existing |
| *Requirement:* | 10 The center shall collect current and forecast traffic and weather information from traffic management centers and weather service providers (such as the National Weather Service and value-added sector specific meteorological services). | Existing |

| Architecture | | Status |
|---|---|---|
| **Gulf Region ITS Architecture** | | |
| *Element:* **MDOT District 6 Maintenance and Construction Offices** | | |
| *Entity:* **Maintenance and Construction Management** | | |
| *Functional Area:* **MCM Roadway Maintenance and Construction**<br>Overall management and support for routine maintenance on the roadway or right-of-way. Includes landscape maintenance, hazard removal (roadway debris, dead animals), routine maintenance activities (roadway cleaning, grass cutting), and repair and maintenance of both ITS and non-ITS equipment. | | |
| *Requirement:* | 11 The center shall dispatch and route maintenance and construction vehicle drivers and support them with route- specific environmental, incident, advisory, threat, alert, and traffic congestion information. | Existing |
| *Requirement:* | 12 The center shall manage an interface with center personnel to accept vehicle systems control information and remotely control maintenance and construction vehicle on-board equipment. | Existing |
| *Requirement:* | 13 The center shall track the status of roadway maintenance and construction activities by monitoring collected data from the dispatched vehicles and equipment. | Planned |
| *Functional Area:* **MCM Work Zone Management**<br>Remotely monitors and supports work zone activities, controlling traffic through dynamic message signs (DMS), highway advisory radio, gates and barriers, and informing other groups of activity (e.g., traveler information systems, traffic management centers, other maintenance and construction centers). | | |
| *Requirement:* | 1 The center shall generate new work zone activity schedules for use by maintenance and construction vehicles, maintenance and construction operators, and for information coordination purposes. | Planned |
| *Requirement:* | 2 The center shall control the collection of work zone status information including video images from cameras located in or near the work zone. | Planned |
| *Requirement:* | 3 The center shall disseminate work zone information to other agencies and centers including traffic, transit, emergency management centers, other maintenance centers, traveler information providers, and the media. | Existing |
| *Requirement:* | 4 The center shall control traffic in work zones by providing remote control of dynamic message signs, highway advisory radio systems, gates, and barriers located in or near the work zone. | Existing |
| *Requirement:* | 5 The center shall exchange information with administrative systems to support the planning and scheduling of work zone activities. This information includes: equipment and consumables, re-supply, purchase request status, personnel qualifications including training and special certifications, environmental regulations and rules that may impact maintenance activities, and requests and project requirements from contract administration. | Existing |
| *Functional Area:* **MCM Work Activity Coordination**<br>Disseminates work activity schedules and current asset restrictions to other agencies. Work schedules are coordinated, factoring in the needs and activities of other agencies and adjacent jurisdictions. | | |

| Architecture | | Status |
|---|---|---|
| **Gulf Region ITS Architecture** | | |
| *Element:* **MDOT District 6 Maintenance and Construction Offices** | | |
| *Entity:* **Maintenance and Construction Management** | | |
| *Functional Area:* **MCM Work Activity Coordination**<br>Disseminates work activity schedules and current asset restrictions to other agencies. Work schedules are coordinated, factoring in the needs and activities of other agencies and adjacent jurisdictions. | | |
| *Requirement:* | 1 The center shall provide work zone activities affecting the road network including the nature of the maintenance or construction activity, location, impact to the roadway, expected time(s) and duration of impact, anticipated delays, alternate routes, and suggested speed limits. This information may be augmented with<br>images that provide a visual indication of current work zone | Planned |
| *Requirement:* | 2 The center shall provide status information about scheduled maintenance and construction activities including anticipated closures and impact to the roadway, alternate routes, anticipated delays, closure times, and durations. The information is provided to other management centers such as traffic, emergency, transit, traveler information providers, other maintenance centers, multimodal transportation providers, rail operations, and the media. | Planned |
| *Requirement:* | 3 The center shall collect and respond to feedback concerning scheduled maintenance and construction activities with other management centers such as traffic, emergency, transit, and rail operations. | Planned |
| *Requirement:* | 4 The center shall collect and disseminate asset restriction information levied on transportation asset usage based on infrastructure design, surveys, tests, or analyses. This includes standard facility design height, width, and weight restrictions, special restrictions such as spring weight restrictions, and temporary facility restrictions that are imposed during maintenance and construction. | Planned |
| *Requirement:* | 5 The center shall exchange information with administrative systems to support the planning and scheduling of maintenance and construction activities. This information includes: equipment and consumables resupply purchase request status, personnel qualifications including training and special certifications, environmental regulations and rules that may impact maintenance activities, and requests and project requirements from contract administration. | Planned |
| *Requirement:* | 6 The center shall exchange rail schedules and work plans with rail operations centers. | Planned |
| *Functional Area:* **MCM Data Collection**<br>Collection and storage of maintenance and construction information. For use by operations personnel or data archives in the region. | | |
| *Requirement:* | 1 The center shall collect maintenance and construction data (such as field equipment status, infrastructure status, maintenance and construction activity data) gathered from roadway, traffic, and other maintenance and construction sources. | Existing |
| *Requirement:* | 5 The center shall provide data to Asset Management to be used in updating the status of assets in the inventory. | Existing |
| *Element:* **MDOT District 6 Maintenance Vehicles** | | |

| Architecture | | Status |
|---|---|---|
| **Gulf Region ITS Architecture** | | |
| *Element:* **MDOT District 6 Maintenance Vehicles** | | |
| *Entity:* **Maintenance and Construction Vehicle** | | |
| *Functional Area:* | **MCV Vehicle Location Tracking**<br>On-board systems to track vehicle location and reports the position and timestamp information to the dispatch center. | |
| *Requirement:* | 1 The maintenance and construction vehicle shall compute the location of the vehicle based on inputs from a vehicle location determination function. | Planned |
| *Requirement:* | 2 The maintenance and construction vehicle shall send the timestamped vehicle location to the controlling center. | Planned |
| *Functional Area:* | **MCV Vehicle System Monitoring and Diagnostics**<br>On-board sensors capable of monitoring the condition of each of the vehicle systems and diagnostics that can be used to support vehicle maintenance. | |
| *Requirement:* | 1 The maintenance and construction vehicle shall collect vehicle diagnostics and operating status data from the maintenance vehicle platform including engine temperature, mileage, tire wear, brake wear, belt wear, and other operational status measures as well as the status of maintenance and construction-specific systems on the vehicle. | Planned |
| *Requirement:* | 2 The maintenance and construction vehicle shall use the diagnostic and status information to support scheduling vehicle maintenance, monitoring safety status, and informing the vehicle operator of the conditions. | Planned |
| *Requirement:* | 3 The maintenance and construction vehicle shall the vehicle diagnostic and safety information to an equipment repair facility. | Planned |
| *Requirement:* | 4 The maintenance and construction vehicle shall send the vehicle diagnostic and safety information to the controlling maintenance center. | Planned |
| *Entity:* **Vehicle** | | |
| *Functional Area:* | **Vehicle Location Determination**<br>Determines current location of the vehicle using GPS or similar location referencing and provides this information to other in-vehicle functions. | |
| *Requirement:* | 1 The vehicle shall provide the vehicle's current location to other in-vehicle functions. | Planned |
| *Requirement:* | 2 The vehicle shall calculate the location from one or more sources of position data. These location referencing systems include position systems such as GPS, DGPS, odometer and differential odometers. | Planned |
| *Requirement:* | 3 The vehicle shall refine its calculations as required by other in-vehicle functions. | Planned |
| *Element:* **MDOT District 6 Portable Dynamic Message Signs** | | |
| *Entity:* **Roadway Subsystem** | | |
| *Functional Area:* | **Roadway Traffic Information Dissemination**<br>Driver information systems, such as dynamic message signs and Highway Advisory Radio (HAR). | |

| Architecture | | Status |
|---|---|---|
| **Gulf Region ITS Architecture** | | |
| *Element:* **MDOT District 6 Portable Dynamic Message Signs** | | |
| *Entity:* **Roadway Subsystem** | | |
| *Functional Area:* | **Roadway Traffic Information Dissemination**<br>Driver information systems, such as dynamic message signs and Highway Advisory Radio (HAR). | |
| *Requirement:* | 1 The field element shall include dynamic messages signs for dissemination of traffic and other information to drivers, under center control; the DMS may be either those that display variable text messages, or those that have fixed format display(s) (e.g. vehicle restrictions, or lane open/close). | Existing |
| *Requirement:* | 4 The field element shall provide operational status for the driver information systems equipment (DMS, HAR, etc.) to the center. | Existing |
| *Requirement:* | 5 The field element shall provide fault data for the driver information systems equipment (DMS, HAR, etc.) to the center for repair. | Existing |
| *Functional Area:* | **Roadway Work Zone Traffic Control**<br>Field elements in maintenance and construction areas including CCTV cameras, driver information systems (such as DMS), and gates/barriers that monitor and control traffic and provide information directly to drivers in affected areas. | |
| *Requirement:* | 2 Under traffic and maintenance center control, the field element shall include driver information systems (such as dynamic messages signs and highway advisory radios) that advise drivers of activity around the work zone through which they are currently passing. | Existing |
| *Requirement:* | 5 The field element shall provide operational status for the surveillance (e.g. CCTV), driver information systems, and gates/barriers in work zones to the maintenance center. | Existing |
| *Requirement:* | 6 The field element shall provide fault data for the surveillance (e.g. CCTV), driver information systems, and gates/barriers in work zones to the maintenance center for repair. | Existing |
| *Element:* **MDOT District 6 PrePass System** | | |
| *Entity:* **Commercial Vehicle Check** | | |
| *Functional Area:* | **Roadside Electronic Screening**<br>Roadside check facility equipment to communicate with commercial vehicles at mainline speeds - reading tag data, identification, weight and vehicle characteristics, and credential checking. Determines whether a pull-in message should be generated, allowing for inspectors to override. | |
| *Requirement:* | 1 The roadside check facility equipment shall detect the presence of commercial vehicles and freight equipment approaching a facility. Sensors can differentiate between different types of vehicles and determine the number of axles, gross vehicle weight, and the identification of the vehicle and its cargo. | Existing |
| *Requirement:* | 2 The roadside check facility equipment shall receive the credential and credentials status information (e.g. snapshots) from the commercial vehicle administration center to maintain an up to date list of which vehicles have been cleared (enrolled) to potentially pass through without stopping. | Existing |
| *Requirement:* | 3 The roadside check facility equipment shall receive violation records from appropriate law enforcement agencies pertaining to commercial vehicles. | Existing |

| Architecture | | Status |
|---|---|---|
| **Gulf Region ITS Architecture** | | |
| *Element:* **MDOT District 6 PrePass System** | | |
| *Entity:* **Commercial Vehicle Check** | | |
| *Functional Area:* | **Roadside Electronic Screening**<br>Roadside check facility equipment to communicate with commercial vehicles at mainline speeds - reading tag data, identification, weight and vehicle characteristics, and credential checking. Determines whether a pull-in message should be generated, allowing for inspectors to override. | |
| *Requirement:* | 4 The roadside check facility equipment shall provide an interface to inspectors in the field to allow them to monitor and if necessary override the pull-in decisions made by the system. | Existing |
| *Requirement:* | 5 The roadside check facility equipment shall request and input electronic screening data from the commercial vehicle's electronic tag data. | Existing |
| *Requirement:* | 6 The roadside check facility equipment shall send a pass/pull-in notification to the commercial vehicle and its driver based on the information received from the vehicle, the administration center, enforcement agencies, and the inspector. The message may be sent to the on-board equipment in the commercial vehicle or transmitted to the driver using equipment such as dynamic message signs, red-green lights, flashing signs, etc. | Existing |
| *Requirement:* | 7 The roadside check facility equipment shall send a record of daily activities at the facility including summaries of screening events and inspections to the commercial vehicle administration center. | Existing |
| *Functional Area:* | **Roadside Safety and Security Inspection**<br>Roadside check facility equipment to provide the capabilities to automate the roadside safety inspection process including use of hand held devices to rapidly inspect the vehicle and driver. | |
| *Requirement:* | 1 The roadside check facility equipment shall receive information concerning commercial vehicles and freight equipment approaching a facility that are being pulled in for safety inspections. | Existing |
| *Requirement:* | 2 The roadside check facility equipment shall receive the safety inspection and status information from the commercial vehicle administration center to include information such as safety ratings, inspection summaries, and violation summaries. Corresponds to the safety portion of CVISN "snapshots." | Existing |
| *Requirement:* | 3 The roadside check facility equipment shall provide an interface to inspectors in the field to allow them to safety inspection data including overrides to the pull-in decisions made by the system. | Existing |
| *Requirement:* | 4 The roadside check facility equipment shall request and input electronic safety data from the commercial vehicle's electronic tag data. This includes driver logs, on-board safety data, safety inspection records, commercial vehicle breach information, as well as freight equipment information. | Existing |
| *Requirement:* | 5 The roadside check facility equipment shall send a pass/pull-in notification to the commercial vehicle and its driver based on the information received from the vehicle, the administration center, and the inspector. The message may be sent to the on-board equipment in the commercial vehicle or transmitted to the driver using equipment such as dynamic message signs, red-green lights, flashing signs, etc. | Existing |

| Architecture | | Status |
|---|---|---|
| **Gulf Region ITS Architecture** | | |
| *Element:* **MDOT District 6 PrePass System** | | |
| *Entity:* **Commercial Vehicle Check** | | |
| *Functional Area:* | **Roadside Safety and Security Inspection**<br>Roadside check facility equipment to provide the capabilities to automate the roadside safety inspection process including use of hand held devices to rapidly inspect the vehicle and driver. | |
| *Requirement:* | 6 The roadside check facility equipment shall receive information about a breach or tamper event on a commercial vehicle or its attached freight equipment which includes identity, type of breach, location, and time. | Existing |
| *Requirement:* | 7 The roadside check facility equipment shall forward results of the roadside safety inspections to the commercial vehicle administration center. | Existing |
| *Functional Area:* | **Citation and Accident Electronic Recording**<br>Roadside check facility equipment records results of roadside inspections and forwards information to the commercial vehicle administration center. Includes accident reports, violations, citations, and the daily site activity data. | |
| *Requirement:* | 1 The roadside check facility equipment shall record the results of roadside inspections carried using an inspector's hand held terminal interface. | Existing |
| *Requirement:* | 2 The roadside check facility equipment shall provide an interface for an inspector to add comments to the inspection results. | Existing |
| *Requirement:* | 3 The roadside check facility equipment shall forward results of the roadside inspections to the commercial vehicle administration center either as needed or on a periodic (e.g. basis). These reports include accident reports, violation notifications, citations, and daily site activity logs. | Existing |
| *Element:* **MDOT District 6 Railroad Crossing Control** | | |
| *Entity:* **Roadway Subsystem** | | |
| *Functional Area:* | **Advanced Rail Crossing**<br>Field elements at highway-rail intersections (HRIs) where operational requirements demand advanced features (e.g., where rail operational speeds are greater than 80 miles per hour). Capabilities from the Standard Rail Crossing plus systems which preclude entrance into the intersection when the barriers are activated, additional arriving train information, and detection of blocked intersections. | |
| *Requirement:* | 1 The field element shall collect and process, traffic sensor data in the vicinity of a highway-rail intersection (HRI). | Planned |
| *Requirement:* | 2 The field element shall determine whether the highway-rail intersection (HRI) is blocked by traffic in the roadway or some other obstruction. | Planned |
| *Requirement:* | 3 The field element shall notify the traffic management center and the rail wayside equipment of any intersection blockages, including trapped vehicles or other obstructions. | Planned |
| *Requirement:* | 4 The field element shall monitor the status of the highway-rail intersection (HRI) equipment, including both the current state and mode of operation and the current equipment condition, to be forwarded on to the traffic management center. | Planned |

| Architecture | | Status |
|---|---|---|
| **Gulf Region ITS Architecture** | | |
| *Element:* **MDOT District 6 Railroad Crossing Control** | | |
| *Entity:* **Roadway Subsystem** | | |
| *Functional Area:* | **Advanced Rail Crossing**<br>Field elements at highway-rail intersections (HRIs) where operational requirements demand advanced features (e.g., where rail operational speeds are greater than 80 miles per hour). Capabilities from the Standard Rail Crossing plus systems which preclude entrance into the intersection when the barriers are activated, additional arriving train information, and detection of blocked intersections. | |
| *Requirement:* | 5 The field element shall monitor the status of the highway-rail intersection (HRI) equipment, including both the current state and mode of operation and the current equipment condition, to be forwarded on to the rail wayside equipment. | Planned |
| *Requirement:* | 6 The field element shall receive track status and arriving train information from the rail wayside equipment that can be passed on to the traffic management center. This may include the current status of the tracks and when a train is expected and/or how long the crossing will be closed. | Planned |
| *Requirement:* | 7 The field element shall collect pedestrian images and pedestrian sensor data, and respond to pedestrian crossing requests via display, audio signal, or other manner. | Planned |
| *Requirement:* | 8 The field element shall control the dynamic message signs (DMS) in the vicinity of a highway-rail intersection (HRI) to advise drivers, cyclists, and pedestrians of approaching trains. | Planned |
| *Requirement:* | 9 The field element shall close the highway-rail intersection (HRI) when a train is approaching with enough time for traffic to safely clear the crossing using gates, lights/signs, barriers, and traffic control signals. | Planned |
| *Requirement:* | 10 The field element shall support the integrated control of adjacent traffic signals to clear an area in advance of an approaching train and to manage traffic around the intersection. | Planned |
| *Requirement:* | 11 The field element shall forward rail traffic advisories received from the Wayside Equipment to the traffic management center. | Planned |
| *Element:* **MDOT District 6 Security Monitoring System** | | |
| *Entity:* **Security Monitoring Subsystem** | | |
| *Functional Area:* | **Field Secure Area Surveillance**<br>Security surveillance devices (audio/video) that monitor facilities (e.g. transit yards) and transportation infrastructure (e.g. bridges, tunnels, interchanges, and transit railways or guideways). | |
| *Requirement:* | 1 The field element shall include video and/or audio surveillance of secure areas including facilities (e.g. transit yards) and transportation infrastructure (e.g. bridges, tunnels, interchanges, roadway infrastructure, and transit railways or guideways). | Existing |
| *Requirement:* | 2 The field element shall be remotely controlled by a center. | Existing |
| *Requirement:* | 3 The field element shall provide equipment status and fault indication of surveillance equipment to a center. | Existing |
| *Requirement:* | 4 The field element shall provide raw video or audio data. | Existing |
| *Element:* **MDOT District 6 Speed Warning System** | | |
| *Entity:* **Roadway Subsystem** | | |

| Architecture | | Status |
|---|---|---|
| **Gulf Region ITS Architecture** | | |
| *Element:* **MDOT District 6 Speed Warning System** | | |
| *Entity:* **Roadway Subsystem** | | |
| *Functional Area:* | **Roadway Traffic Information Dissemination**<br>Driver information systems, such as dynamic message signs and Highway Advisory Radio (HAR). | |
| *Requirement:* | 1 The field element shall include dynamic messages signs for dissemination of traffic and other information to drivers, under center control; the DMS may be either those that display variable text messages, or those that have fixed format display(s) (e.g. vehicle restrictions, or lane open/close). | Planned |
| *Requirement:* | 4 The field element shall provide operational status for the driver information systems equipment (DMS, HAR, etc.) to the center. | Planned |
| *Requirement:* | 5 The field element shall provide fault data for the driver information systems equipment (DMS, HAR, etc.) to the center for repair. | Planned |
| *Functional Area:* | **Roadway Equipment Coordination**<br>Field elements that control and send data to other field elements (such as environmental sensors that send data to a DMS or coordination between traffic controllers on adjacent intersections), without center control. | |
| *Requirement:* | 1 The field element shall include sensors (such as traffic, environmental, and work zone intrusion detection sensors) that provide data and status information to other field element devices (such as dynamic message signs, ramp meters, traffic signals, work zone intrusion alert systems), without center control. | Planned |
| *Requirement:* | 2 The field element shall include sensors (such as traffic, environmental and work zone intrusion detection sensors) that receive control information from other field element devices, without center control. | Planned |
| *Requirement:* | 3 The field element shall include devices (such as arterial or freeway controllers, roadway automated treatment systems, barrier and safeguard systems, emissions or pollution systems, and work zone intrusion alert systems) that provide data and status information to other field element devices (such as dynamic message signs, traffic controllers on adjacent intersections), without center control. | Planned |
| *Requirement:* | 4 The field element shall include devices (such as arterial or freeway controllers, roadway automated treatment systems, barrier and safeguard systems, emissions or pollution systems, and work zone intrusion alert systems) that receive control information from other field element devices, without center control. | Planned |
| *Functional Area:* | **Roadway Speed Monitoring**<br>Vehicle speed sensors that detect excessive vehicle speeds, informing drivers, centers and/or enforcement agencies of speed violations. | |
| *Requirement:* | 1 The field element shall include sensors to detect vehicle speeds, under traffic or maintenance center control. | Planned |
| *Requirement:* | 3 If the speed detected by vehicle speed sensors is determined to be excessive, the field element shall provide a safe speed advisory to passing drivers via a driver information system (such as portable messages signs, etc.). | Planned |

| Architecture | | Status |
|---|---|---|
| **Gulf Region ITS Architecture** | | |
| *Element:* **MDOT District 6 Speed Warning System** | | |
| *Entity:* **Roadway Subsystem** | | |
| *Functional Area:* **Roadway Speed Monitoring** Vehicle speed sensors that detect excessive vehicle speeds, informing drivers, centers and/or enforcement agencies of speed violations. | | |
| *Requirement:* | 4 The field element shall base speed advisories to passing drivers on environmental conditions. | Planned |
| *Requirement:* | 5 The field element shall monitor notify an enforcement agency when a speed violation is detected. | Planned |
| *Requirement:* | 6 The field element shall return operational status for the vehicle speed sensors to the controlling traffic or maintenance center; including measured speeds, warning messages displayed, and violation records. | Planned |
| *Requirement:* | 8 The field element shall return fault data for the vehicle speed sensors to the controlling center for repair. | Planned |
| *Element:* **MDOT District 6 TOC** | | |
| *Entity:* **Emergency Management** | | |
| *Functional Area:* **Service Patrol Management** Dispatch and communication with roadway service patrol vehicles that monitor roads to aid motorists, offering rapid response to minor incidents. | | |
| *Requirement:* | 1 The center shall dispatch roadway service patrol vehicles to identified incident locations. | Planned |
| *Requirement:* | 2 The center shall store the current status of all service patrol vehicles available for dispatch and those that have been dispatched. | Planned |
| *Requirement:* | 3 The center shall share incident information collected by the service patrol with traffic, maintenance and construction, and traveler information centers for incident management, incident notification to travelers, and incident cleanup. | Planned |
| *Requirement:* | 4 The center shall track the location and status of service patrol vehicles. | Planned |
| *Functional Area:* **Center Secure Area Surveillance** Management of security surveillance devices and analysis of that data to detect potential threats. Areas under surveillance may include transit stops, transit stations, rest areas, park and ride lots, modal interchange facilities, on-board a transit vehicle, etc. | | |
| *Requirement:* | 1 The center shall remotely monitor video images and audio surveillance data collected in secure areas including facilities (e.g. transit yards) and transportation infrastructure (e.g. bridges, tunnels, interchanges, roadway infrastructure, and transit railways or guideways). The data may be raw or pre-processed | Existing |
| *Requirement:* | 5 The center shall identify potential security threats based on collected security surveillance data. | Existing |
| *Requirement:* | 7 The center shall remotely control security surveillance devices in secure areas including facilities (e.g. transit yards) and transportation infrastructure (e.g. bridges, tunnels, interchanges, roadway infrastructure, and transit railways or guideways). | Existing |

| Architecture | | Status |
|---|---|---|
| **Gulf Region ITS Architecture** | | |
| *Element:* **MDOT District 6 TOC** | | |
| *Entity:* **Emergency Management** | | |
| *Functional Area:* | **Center Secure Area Surveillance**<br>Management of security surveillance devices and analysis of that data to detect potential threats. Areas under surveillance may include transit stops, transit stations, rest areas, park and ride lots, modal interchange facilities, on-board a transit vehicle, etc. | |
| *Requirement:* | 12 The center shall respond to control data from center personnel regarding security surveillance data collection, processing, threat.detection, and image matching. | Existing |
| *Entity:* **Information Service Provider** | | |
| *Functional Area:* | **ISP Emergency Traveler Information**<br>Collection and distribution of emergency information to the traveler public, including evacuation information and wide-area alerts. | |
| *Requirement:* | 1 The center shall collect and provide to the traveler interface systems emergency evacuation information, including evacuation zones, shelter information, available transportation modes, road closures and detours, changes to transit services, and traffic and road conditions at the origin, destination, and along the evacuation routes. | Existing |
| *Requirement:* | 3 The center shall collect and provide wide-area alert information to the traveler interface system with region-specific data, including major emergencies such as a natural or man-made disaster, civil emergency, child abductions, severe weather watches and warnings, military activities, and law enforcement warnings. | Existing |
| *Requirement:* | 4 The center shall provide the capability for a system operator to control the type and update frequency of emergency and wide-area alert information distributed to travelers. | Existing |
| *Entity:* **Maintenance and Construction Management** | | |
| *Functional Area:* | **MCM Vehicle Tracking**<br>Remotely tracks the location of maintenance and construction vehicles and other equipment; presented to the center personnel. | |
| *Requirement:* | 1 The center shall monitor the locations of all maintenance and construction vehicles and other equipment under its jurisdiction. | Planned |
| *Requirement:* | 2 The center shall present location data to center personnel for the fleet of maintenance and construction vehicles and other equipment. | Planned |
| *Requirement:* | 3 The center shall support an interface with a map update provider, or other appropriate data sources, through which updates of digitized map data can be obtained and used as a background for maintenance and construction vehicle tracking. | Planned |
| *Entity:* **Traffic Management** | | |
| *Functional Area:* | **Collect Traffic Surveillance**<br>Management of traffic sensors and surveillance (CCTV) equipment, and distribution of the collected information to other centers and operators. | |
| *Requirement:* | 1 The center shall monitor, analyze, and store traffic sensor data (speed, volume, occupancy) collected from field elements under remote control of the center. | Existing |

| Architecture | | Status |
|---|---|---|
| **Gulf Region ITS Architecture** | | |
| *Element:* **MDOT District 6 TOC** | | |
| *Entity:* **Traffic Management** | | |
| *Functional Area:* **Collect Traffic Surveillance** Management of traffic sensors and surveillance (CCTV) equipment, and distribution of the collected information to other centers and operators. | | |
| *Requirement:* | 2 The center shall monitor, analyze, and distribute traffic images from CCTV systems under remote control of the center. | Existing |
| *Requirement:* | 3 The center shall monitor, analyze, and store multimodal crossing and high occupancy vehicle (HOV) lane sensor data under remote control of the center. | Existing |
| *Requirement:* | 4 The center shall distribute road network conditions data (raw or processed) based on collected and analyzed traffic sensor and surveillance data to other centers. | Existing |
| *Requirement:* | 5 The center shall respond to control data from center personnel regarding sensor and surveillance data collection, analysis, storage, and distribution. | Existing |
| *Requirement:* | 6 The center shall maintain a database of surveillance and sensors and the freeways, surface street and rural roadways, e.g. where they are located, to which part(s) of the network their data applies, the type of data, and the ownership of each link (that is, the agency or entity responsible for collecting and storing surveillance of the link) in the network. | Existing |
| *Requirement:* | 7 The center shall support an interface with a map update provider, or other appropriate data sources, through which updates of digitized map data can be obtained and used as a background for traffic data. | Existing |
| *Functional Area:* **TMC Signal Control** Remotely controls traffic signal controllers to implement traffic management strategies at signalized intersections based on traffic conditions, incidents, emergency vehicle preemptions, pedestrian crossings, etc. | | |
| *Requirement:* | 1 The center shall remotely control traffic signal controllers. | Existing |
| *Requirement:* | 2 The center shall accept notifications of right-of-way requests from pedestrians. | Existing |
| *Requirement:* | 3 The center shall collect traffic signal controller operational status and compare against the control information sent by the center. | Existing |
| *Requirement:* | 4 The center shall collect traffic signal controller fault data from the field. | Existing |
| *Requirement:* | 5 The center shall implement control plans to coordinate signalized intersections, under control of center personnel, based on data from sensors and surveillance monitoring traffic conditions, incidents, emergency vehicle preemptions, the passage of commercial vehicles with unusual loads, equipment faults, pedestrian crossings, etc. | Existing |
| *Functional Area:* **TMC Traffic Information Dissemination** Controls dissemination of traffic-related data to other centers, the media, and travelers via the driver information systems (DMS, HAR) that it operates. | | |
| *Requirement:* | 1 The center shall remotely control dynamic messages signs for dissemination of traffic and other information to drivers. | Existing |

| Architecture | | Status |
|---|---|---|
| **Gulf Region ITS Architecture** | | |
| *Element:* **MDOT District 6 TOC** | | |
| *Entity:* **Traffic Management** | | |
| *Functional Area:* | **TMC Traffic Information Dissemination**<br>Controls dissemination of traffic-related data to other centers, the media, and travelers via the driver information systems (DMS, HAR) that it operates. | |
| *Requirement:* | 2 The center shall remotely control driver information systems that communicate directly from a center to the vehicle radio (such as Highway Advisory Radios) for dissemination of traffic and other information to drivers. | Planned |
| *Requirement:* | 3 The center shall collect operational status for the driver information systems equipment (DMS, HAR, etc.). | Existing |
| *Requirement:* | 4 The center shall collect fault data for the driver information systems equipment (DMS, HAR, etc.) for repair. | Existing |
| *Requirement:* | 5 The center shall retrieve locally stored traffic information, including current and forecasted traffic information, road and weather conditions, traffic incident information, information on diversions and alternate routes, closures, and special traffic restrictions (lane/shoulder use, weight restrictions, width restrictions, HOV requirements), etc. | Planned |
| *Requirement:* | 8 The center shall provide the capability for center personnel to control the nature of the data that is available to non-traffic operations centers and the media. | Existing |
| *Functional Area:* | **TMC Regional Traffic Control**<br>Coordination between traffic management centers in order to share traffic information between centers as well as control of traffic management field equipment. This may be used during incidents and special events and during day-to-day operations. | |
| *Requirement:* | 1 The center shall exchange traffic information with other traffic management centers, includes incident information, congestion data, traffic data, signal timing plans, and real-time signal control information. | Planned |
| *Requirement:* | 2 The center shall exchange traffic control information with other traffic management centers, includes remote monitoring and control of traffic management devices (e.g. signs, sensors, signals, cameras, etc.). | Planned |
| *Functional Area:* | **TMC Incident Detection**<br>Remotely controls traffic and video sensors to support incident detection and verification; exchange information with other agencies including emergency management, maintenance and construction, alerting and advisory systems, event promoters, intermodal freight depots, and traveler information systems. | |
| *Requirement:* | 1 The center shall receive inputs from the Alerting and Advisory System concerning the possibility or occurrence of severe weather, terrorist activity, or other major emergency, including information provided by the Emergency Alert System. | Existing |
| *Requirement:* | 2 The center shall collect and store traffic flow and image data from the field equipment to detect and verify incidents. | Existing |
| *Requirement:* | 3 The center shall receive inputs concerning upcoming events that would effect the traffic network from event promoters, traveler information service providers, and intermodal freight depots. | Existing |

| Architecture | | Status |
|---|---|---|
| **Gulf Region ITS Architecture** | | |
| *Element:* **MDOT District 6 TOC** | | |
| *Entity:* **Traffic Management** | | |
| *Functional Area:* | **TMC Incident Detection**<br>Remotely controls traffic and video sensors to support incident detection and verification; exchange information with other agencies including emergency management, maintenance and construction, alerting and advisory systems, event promoters, intermodal freight depots, and traveler information systems. | |
| *Requirement:* | 4 The center shall exchange incident and threat information with emergency management centers as well as maintenance and construction centers; including notification of existence of incident and expected severity, location, time and nature of incident. | Existing |
| *Requirement:* | 6 The center shall provide road network conditions and traffic images to emergency management centers to support the detection, verification, and classification of incidents. | Existing |
| *Requirement:* | 7 The center shall provide video and traffic sensor control commands to the field equipment to detect and verify incidents. | Existing |
| *Functional Area:* | **TMC Incident Dispatch Coordination/Communication**<br>Center-based capability to formulate an incident response that takes into account the incident potential, incident impacts, and/or resources required for incident management including proposing and facilitating the dispatch of emergency response and service vehicles as well as coordinating response with all appropriate cooperating agencies. | |
| *Requirement:* | 1 The center shall exchange alert information and status with emergency management centers. The information includes notification of a major emergency such as a natural or man-made disaster, civil emergency, or child abduction for distribution to the public. The information may include the alert originator, the nature of the emergency, the geographic area affected by the emergency, the effective time period, and information and instructions necessary for the public to respond to the alert. This may also identify specific information that should not be released to the public. | Existing |
| *Requirement:* | 2 The center shall coordinate planning for incidents with emergency management centers - including pre-planning activities for disaster response, evacuation, and recovery operations. | Existing |
| *Requirement:* | 4 The center shall exchange incident and threat information with emergency management centers as well as maintenance and construction centers; including notification of existence of incident and expected severity, location, time and nature of incident. | Existing |
| *Requirement:* | 5 The center shall respond to requests from emergency management to provide traffic management resources to implement special traffic control measures, assist in clean up, verify an incident, etc. This may also involve coordination with maintenance centers. | Existing |
| *Requirement:* | 6 The center shall receive inputs concerning upcoming events that would effect the traffic network from event promoters, traveler information service providers, media, and rail operations centers. | Existing |
| *Requirement:* | 7 The center shall provide road network conditions and traffic images to emergency management centers, maintenance and construction centers, and traveler information service providers. | Existing |

| Architecture | | | Status |
|---|---|---|---|
| **Gulf Region ITS Architecture** | | | |
| *Element:* **MDOT District 6 TOC** | | | |
| *Entity:* **Traffic Management** | | | |
| *Functional Area:* | **TMC Incident Dispatch Coordination/Communication**<br>Center-based capability to formulate an incident response that takes into account the incident potential, incident impacts, and/or resources required for incident management including proposing and facilitating the dispatch of emergency response and service vehicles as well as coordinating response with all appropriate cooperating agencies. | | |
| *Requirement:* | 8 | The center shall exchange road network status assessment information with emergency management and maintenance centers including an assessment of damage sustained by the road network including location and extent of the damage, estimate of remaining capacity, required closures, alternate routes, necessary restrictions, and time frame for repair and recovery. | Existing |
| *Requirement:* | 9 | The center shall coordinate information and controls with other traffic management centers. | Existing |
| *Requirement:* | 10 | The center shall receive inputs from emergency management and transit management centers to develop an overall status of the transportation system including emergency transit schedules in effect and current status and condition of the transportation infrastructure. | Existing |
| *Requirement:* | 11 | The center shall support an interface with a map update provider, or other appropriate data sources, through which updates of digitized map data can be obtained and used as a background for traffic incident management. | Existing |
| *Functional Area:* | **TMC Evacuation Support**<br>Development, coordination, and execution of special traffic management strategies during evacuation and subsequent reentry of a population in the vicinity of a disaster or major emergency. Interfaces with emergency management and other traffic management centers. | | |
| *Requirement:* | 1 | The center shall coordinate planning for evacuation with emergency management centers - including pre-planning activities such as establishing routes, areas to be evacuated, timing, etc. | Existing |
| *Requirement:* | 2 | The center shall support requests from emergency management centers to preempt the current traffic control strategy, activate traffic control and closure systems such as gates and barriers, activate safeguard systems, or use driver information systems to support evacuation traffic control plans. | Existing |
| *Requirement:* | 3 | The center shall coordinate information and controls with other traffic management centers. | Existing |
| *Requirement:* | 4 | The center shall coordinate execution of evacuation strategies with emergency management centers - including activities such as setting closures and detours, establishing routes, updating areas to be evacuated, timing the process, etc. | Existing |
| *Functional Area:* | **TMC Environmental Monitoring**<br>Management of environmental sensors and assimilation of collected data with other current and forecast road conditions and surface weather information from weather service providers and roadway maintenance operations. | | |

| Architecture | | Status |
|---|---|---|
| **Gulf Region ITS Architecture** | | |
| *Element:* **MDOT District 6 TOC** | | |
| *Entity:* **Traffic Management** | | |
| *Functional Area:* | **TMC Environmental Monitoring**<br>Management of environmental sensors and assimilation of collected data with other current and forecast road conditions and surface weather information from weather service providers and roadway maintenance operations. | |
| *Requirement:* | 2 The center shall remotely control environmental sensors that measure weather conditions including temperature, wind, humidity, precipitation, and visibility. | Planned |
| *Requirement:* | 3 The center shall assimilate current and forecast road conditions and surface weather information using a combination of weather service provider information (such as the National Weather Service and value-added sector specific meteorological services), data from roadway maintenance operations, and environmental data collected from sensors deployed on and about the roadway. | Planned |
| *Requirement:* | 4 The center shall provide weather and road condition information to weather service providers and center personnel. | Planned |
| *Requirement:* | 5 The center shall respond to control data from center personnel regarding environmental sensor control and weather data collection and processing. | Planned |
| *Functional Area:* | **HRI Traffic Management**<br>Remotely monitor and control highway-rail intersection (HRI) equipment, includes standard speed active warning systems and high speed systems which provide additional information on approaching trains and detect and report on obstructions in the HRI. | |
| *Requirement:* | 1 The center shall remotely control highway-rail intersection (HRI) equipment located in the field. | Existing |
| *Requirement:* | 2 The center shall accept collect highway-rail intersection (HRI) advisory or alert data from rail operations centers. | Existing |
| *Requirement:* | 3 The center shall collect highway-rail intersection (HRI) equipment operational status and compare against the control information sent by the center. | Existing |
| *Requirement:* | 4 The center shall provide the highway-rail intersection (HRI) equipment operational status to rail operations centers. | Existing |
| *Requirement:* | 5 The center shall collect incident information related to a highway-rail intersection (HRI), such as intersection blockages or crashes or equipment malfunctions. | Existing |
| *Requirement:* | 6 The center shall implement control plans to coordinate signalized intersections around highway-rail intersections (HRI), under control of center personnel, based on data from sensors and surveillance monitoring traffic conditions, incidents, equipment faults, pedestrian crossings, etc. | Planned |
| *Functional Area:* | **Rail Operations Coordination**<br>Coordination between rail operations and traffic management centers - exchanging train schedules, maintenance schedules, as well as incidents and priority messages that impact highway-rail intersections (HRIs. Supports advanced traffic control strategies and enhanced traveler information. | |

| Architecture | | Status |
|---|---|---|
| **Gulf Region ITS Architecture** | | |
| *Element:* **MDOT District 6 TOC** | | |
| *Entity:* **Traffic Management** | | |
| *Functional Area:* | **Rail Operations Coordination**<br>Coordination between rail operations and traffic management centers - exchanging train schedules, maintenance schedules, as well as incidents and priority messages that impact highway-rail intersections (HRIs. Supports advanced traffic control strategies and enhanced traveler information. | |
| *Requirement:* | 1 The center shall exchange highway-rail intersection (HRI) information with rail operations centers. This information may include event schedules, requests for information from the Rail Operators, incident notification based on rail operations messages, and priority messages like notifications of a HAZMAT spill, equipment failure, or an intersection blockage. | Planned |
| *Requirement:* | 2 The center shall receive highway-rail intersection (HRI) maintenance schedules, train schedules, and incident notifications from rail operations centers. | Planned |
| *Requirement:* | 3 The center shall use the rail operations information to develop forecast HRI closure times and durations which may be applied in advanced traffic control strategies or delivered as enhanced traveler information. | Planned |
| *Functional Area:* | **TMC Multimodal Crossing Management**<br>Remotely monitors and manages multimodal crossings, such as draw bridges and other crossings between highway traffic and other modes; does not include highway-rail intersection. | |
| *Requirement:* | 1 The center shall receive requests from non-highway traffic to cross at multimodal crossings for specified durations (such as draw bridges and miscellaneous other interference crossings between highway traffic and other modes such as river traffic, aircraft, etc.) | Planned |
| *Requirement:* | 2 The center shall remotely control traffic signal controllers for use at major multimodal crossings. | Planned |
| *Requirement:* | 3 The center shall remotely control driver information systems (such as dynamic messages signs, highway advisory radios (HAR), and equipment that controls warning lights and gates) to notify drivers of closure durations and times at multimodal crossings. | Planned |
| *Requirement:* | 4 The center shall collect operational status for the equipment at multimodal crossings. | Planned |
| *Requirement:* | 5 The center shall collect fault data for the equipment at multimodal crossings for repair. | Planned |
| *Requirement:* | 6 The center shall receive and respond to requests for right-of-way at multimodal crossings. | Planned |
| *Requirement:* | 7 The center shall collect and analyze the planned multimodal crossing closures as a possible incident. | Planned |
| *Requirement:* | 8 The center shall distribute multimodal crossing information to other centers for dissemination to travelers. | Planned |
| *Functional Area:* | **Traffic Maintenance**<br>Monitoring and remote diagnostics of field equipment - detect failures, issue problem reports, and track the repair or replacement of the failed equipment. | |

| Architecture | | Status |
|---|---|---|
| **Gulf Region ITS Architecture** | | |
| *Element:* **MDOT District 6 TOC** | | |
| *Entity:* **Traffic Management** | | |
| *Functional Area:* **Traffic Maintenance** Monitoring and remote diagnostics of field equipment - detect failures, issue problem reports, and track the repair or replacement of the failed equipment. | | |
| *Requirement:* | 1 The center shall collect and store sensor (traffic, pedestrian, multimodal crossing) operational status. | Existing |
| *Requirement:* | 2 The center shall collect and store CCTV surveillance system (traffic, pedestrian) operational status. | Existing |
| *Requirement:* | 3 The center shall collect and store sensor (traffic, pedestrian, multimodal crossing) fault data and send to the maintenance center for repair. | Existing |
| *Requirement:* | 4 The center shall collect and store CCTV surveillance system (traffic, pedestrian) fault data send to the maintenance center for repair. | Existing |
| *Requirement:* | 5 The center shall collect environmental sensor operational status. | Existing |
| *Requirement:* | 6 The center shall collect environmental sensor equipment fault data and send to the maintenance center for repair. | Existing |
| *Requirement:* | 7 The center shall exchange data with maintenance centers concerning the reporting of faulty equipment and the schedule/status of their repair. Information exchanged includes details of new equipment faults, and clearances when the faults are cleared. | Existing |
| *Requirement:* | 8 The center shall support an interface with a map update provider, or other appropriate data sources, through which updates of digitized map data can be obtained and used as a background for traffic maintenance data. | Existing |
| *Functional Area:* **TMC Work Zone Traffic Management** Coordination with maintenance systems using work zone images and traveler information systems (such as DMS), and distribution of work plans so that work zones are established that have minimum traffic impact. | | |
| *Requirement:* | 3 The center shall remotely control driver information systems (such as dynamic messages signs, highway advisory radios) to advise drivers of activity around a work zone. | Existing |
| *Requirement:* | 4 The center shall collect operational status for the driver information systems equipment in work zones. | Existing |
| *Requirement:* | 5 The center shall collect fault data for the driver information systems equipment in work zones for repair. | Existing |
| *Requirement:* | 6 The center shall receive proposed maintenance and construction work plans, analyze the activity as a possible incident, and provide work plan feedback to the sending center. | Existing |
| *Functional Area:* **TMC Multimodal Coordination** Provides traffic signal priority for transit vehicles based on center-to-center communications with the transit management center; also exchange traffic and transit information. | | |
| *Requirement:* | 1 The center shall respond to requests from transit management centers for signal priority at one or more intersections along a particular transit route. | Planned |

| Architecture | | Status |
|---|---|---|
| **Gulf Region ITS Architecture** | | |
| *Element:* **MDOT District 6 TOC** | | |
| *Entity:* **Traffic Management** | | |
| *Functional Area:* **TMC Multimodal Coordination** Provides traffic signal priority for transit vehicles based on center-to-center communications with the transit management center; also exchange traffic and transit information. | | |
| *Requirement:* | 2 The center shall exchange information with transit management centers including details current transit routes, the level of service on each route, and the progress of individual vehicles along their routes. | Planned |
| *Functional Area:* **Traffic Data Collection** Collection and storage of traffic management data. For use by operations personnel or data archives in the region. | | |
| *Requirement:* | 1 The center shall collect traffic management data such as operational data, event logs, etc. | Existing |
| *Element:* **MDOT District 6 Traffic Sensors** | | |
| *Entity:* **Roadway Subsystem** | | |
| *Functional Area:* **Roadway Basic Surveillance** Field elements that monitor traffic conditions using loop detectors and CCTV cameras. | | |
| *Requirement:* | 1 The field element shall collect, process, digitize, and send traffic sensor data (speed, volume, and occupancy) to the center for further analysis and storage, under center control. | Existing |
| *Requirement:* | 4 The field element shall return sensor and CCTV system operational status to the controlling center. | Existing |
| *Requirement:* | 5 The field element shall return sensor and CCTV system fault data to the controlling center for repair. | Existing |
| *Functional Area:* **Roadway Data Collection** Field elements to collect traffic, road, and environmental conditions information for use in transportation planning, research, and other off-line applications. Includes the sensors, supporting roadside infrastructure, and communications equipment. | | |
| *Requirement:* | 1 The field element shall collect traffic, road, and environmental conditions information. | Existing |
| *Requirement:* | 2 The field element shall include the sensors and supporting roadside devices that sense, collect, and send traffic, road, and environmental conditions information to a center for archival. | Existing |
| *Requirement:* | 3 The field element shall collect sensor status and sensor faults from roadside equipment and send it along with the recorded data to a center for archival. | Existing |
| *Element:* **MDOT District 6 Traffic Signal Systems** | | |
| *Entity:* **Roadway Subsystem** | | |
| *Functional Area:* **Roadway Signal Controls** Field elements including traffic signal controllers for use at signalized intersections; also supports pedestrian crossings. | | |
| *Requirement:* | 1 The field element shall control traffic signals at intersections and on main highways for urban and rural areas, under center control. | Existing |

| Architecture | | Status |
|---|---|---|
| **Gulf Region ITS Architecture** | | |
| *Element:* **MDOT District 6 Traffic Signal Systems** | | |
| *Entity:* **Roadway Subsystem** | | |
| *Functional Area:* **Roadway Signal Controls** Field elements including traffic signal controllers for use at signalized intersections; also supports pedestrian crossings. | | |
| *Requirement:* | 2 The field element shall collect pedestrian images and pedestrian sensor data, and respond to pedestrian crossing requests via display, audio signal, or other manner. | Existing |
| *Requirement:* | 3 The field element shall provide the capability to notify the traffic management center that a pedestrian has requested right-of-way and when the request was or will be granted (request for right-of-way). | Existing |
| *Requirement:* | 4 The field element shall monitor operation of traffic signal controllers and report to the center any instances in which the indicator response does not match that expected from the indicator control information. | Existing |
| *Requirement:* | 5 The field element shall monitor operation of traffic signal controllers and report to the center any instances in which the indicator response does not match that expected from known indicator preemptions. | Existing |
| *Requirement:* | 6 The field element shall return traffic signal controller operational status to the controlling center. | Existing |
| *Requirement:* | 7 The field element shall return traffic signal controller fault data to the maintenance center for repair. | Existing |
| *Functional Area:* **Roadway Signal Priority** Field elements that provide the capability to receive vehicle signal priority requests and control traffic signals accordingly. | | |
| *Requirement:* | 1 The field element shall respond to requests for indicator (e.g., signal) preemption requests from emergency vehicles at intersections, pedestrian crossings, and multimodal crossings. | Planned |
| *Requirement:* | 2 The field element shall respond to requests for indicator (e.g., signal) priority requests from transit vehicles at intersections, pedestrian crossings, and multimodal crossings. | Planned |
| *Requirement:* | 3 The field element shall notify controlling traffic management center and maintenance center that the signal timing has changed based on a signal preemption/priority request to help those centers determine whether a fault detected at the signal is a true malfunction or due to a signal override. | Planned |
| *Functional Area:* **Standard Rail Crossing** Field elements at highway-rail intersections (HRIs) where operational requirements do not dictate advanced features (e.g., where rail operational speeds are less than 80 miles per hour). Includes traditional HRI warning systems augmented with other standard traffic management devices. | | |
| *Requirement:* | 1 The field element shall collect and process, traffic sensor data in the vicinity of a highway-rail intersection (HRI). | Existing |
| *Requirement:* | 2 The field element shall monitor the status of the highway-rail intersection (HRI) equipment, including both the current state and mode of operation and the current equipment condition, to be forwarded on to the traffic management center. | Existing |

| Architecture | | Status |
|---|---|---|
| **Gulf Region ITS Architecture** | | |
| *Element:* **MDOT District 6 Traffic Signal Systems** | | |
| *Entity:* **Roadway Subsystem** | | |
| *Functional Area:* | **Standard Rail Crossing**<br>Field elements at highway-rail intersections (HRIs) where operational requirements do not dictate advanced features (e.g., where rail operational speeds are less than 80 miles per hour). Includes traditional HRI warning systems augmented with other standard traffic management devices. | |
| *Requirement:* | 3 The field element shall monitor the status of the highway-rail intersection (HRI) equipment, including both the current state and mode of operation and the current equipment condition, to be forwarded on to the rail wayside equipment. | Existing |
| *Requirement:* | 4 The field element shall receive track status from the rail wayside equipment that can be passed on to the traffic management center. This may include the current status of the tracks and whether a train is approaching. | Existing |
| *Requirement:* | 8 The field element shall support the integrated control of adjacent traffic signals to clear an area in advance of an approaching train and to manage traffic around the intersection. | Existing |
| *Functional Area:* | **Roadway Equipment Coordination**<br>Field elements that control and send data to other field elements (such as environmental sensors that send data to a DMS or coordination between traffic controllers on adjacent intersections), without center control. | |
| *Requirement:* | 1 The field element shall include sensors (such as traffic, environmental, and work zone intrusion detection sensors) that provide data and status information to other field element devices (such as dynamic message signs, ramp meters, traffic signals, work zone intrusion alert systems), without center control. | Existing |
| *Requirement:* | 2 The field element shall include sensors (such as traffic, environmental, and work zone intrusion detection sensors) that receive control information from other field element devices, without center control. | Existing |
| *Requirement:* | 3 The field element shall include devices (such as arterial or freeway controllers, roadway automated treatment systems, barrier and safeguard systems, emissions or pollution systems, and work zone intrusion alert systems) that provide data and status information to other field element devices (such as dynamic message signs, traffic controllers on adjacent intersections), without center control. | Existing |
| *Requirement:* | 4 The field element shall include devices (such as arterial or freeway controllers, roadway automated treatment systems, barrier and safeguard systems, emissions or pollution systems, and work zone intrusion alert systems) that receive control information from other field element devices, without center control. | Existing |
| *Element:* **MDOT District 6 Video Surveillance Equipment** | | |
| *Entity:* **Roadway Subsystem** | | |
| *Functional Area:* | **Roadway Basic Surveillance**<br>Field elements that monitor traffic conditions using loop detectors and CCTV cameras. | |
| *Requirement:* | 2 The field element shall collect, process, and send traffic images to the center for further analysis and distribution. | Existing |

| Architecture | | Status |
|---|---|---|
| **Gulf Region ITS Architecture** | | |
| *Element:* **MDOT District 6 Video Surveillance Equipment** | | |
| *Entity:* **Roadway Subsystem** | | |
| *Functional Area:* **Roadway Basic Surveillance** Field elements that monitor traffic conditions using loop detectors and CCTV cameras. | | |
| *Requirement:* | 3 The field element shall collect, digitize, and send multimodal crossing and high occupancy vehicle (HOV) lane sensor data to the center for further analysis and storage. | Existing |
| *Requirement:* | 4 The field element shall return sensor and CCTV system operational status to the controlling center. | Existing |
| *Requirement:* | 5 The field element shall return sensor and CCTV system fault data to the controlling center for repair. | Existing |
| *Functional Area:* **Roadway Incident Detection** Field elements that monitor traffic conditions to identify incidents. It includes traffic detectors that collect traffic flow information and identify unusual traffic conditions and advanced CCTV cameras with built-in incident detection algorithms. | | |
| *Requirement:* | 1 The field element shall collect, process, and send traffic images to the center for further analysis and distribution. | Existing |
| *Requirement:* | 3 The field element's video devices shall be remotely controlled by a traffic management center. | Existing |
| *Requirement:* | 4 The field element shall provide operational status and fault data for the incident detection devices to the traffic management center. | Existing |
| *Functional Area:* **Roadway Work Zone Traffic Control** Field elements in maintenance and construction areas including CCTV cameras, driver information systems (such as DMS), and gates/barriers that monitor and control traffic and provide information directly to drivers in affected areas. | | |
| *Requirement:* | 1 The field element shall collect, process, and send work zone images to the center for further analysis and distribution, under center control. | Existing |
| *Requirement:* | 5 The field element shall provide operational status for the surveillance (e.g. CCTV), driver information systems, and gates/barriers in work zones to the maintenance center. | Existing |
| *Requirement:* | 6 The field element shall provide fault data for the surveillance (e.g. CCTV), driver information systems, and gates/barriers in work zones to the maintenance center for repair. | Existing |
| *Element:* **MDOT District 6 Weather Sensors** | | |
| *Entity:* **Roadway Subsystem** | | |
| *Functional Area:* **Roadway Environmental Monitoring** Environmental sensors, surface and sub-surface, that collect weather and road surface information. Weather conditions measured include temperature, wind, humidity, precipitation, and visibility. Sensors measure road surface temperature, moisture, icing, salinity, etc. | | |
| *Requirement:* | 1 The field element shall include surface and sub-surface environmental sensors that measure road surface temperature, moisture, icing, salinity, and other measures. | Planned |

| Architecture | | | Status |
|---|---|---|---|
| **Gulf Region ITS Architecture** | | | |
| *Element:* **MDOT District 6 Weather Sensors** | | | |
| *Entity:* **Roadway Subsystem** | | | |
| *Functional Area:* | **Roadway Environmental Monitoring** Environmental sensors, surface and sub-surface, that collect weather and road surface information. Weather conditions measured include temperature, wind, humidity, precipitation, and visibility. Sensors measure road surface temperature, moisture, icing, salinity, etc. | | |
| *Requirement:* | 2 | The field element shall include environmental sensors that measure weather conditions including temperature, wind, humidity, precipitation, and visibility. | Planned |
| *Requirement:* | 3 | The field element's environmental sensors shall be remotely controlled by a maintenance center. | Planned |
| *Requirement:* | 4 | The field element's environmental sensors shall be remotely controlled by a traffic management center. | Planned |
| *Requirement:* | 5 | The field element's environmental sensors shall be remotely controlled by weather service providers such as the National Weather Service or value-added sector specific meteorological services. | Planned |
| *Requirement:* | 7 | The field element shall provide environmental sensor equipment operational status to the controlling center or maintenance vehicle. | Planned |
| *Requirement:* | 8 | The field element shall provide environmental sensor equipment fault indication to the controlling center or maintenance vehicle. | Planned |
| *Requirement:* | 9 | The field element shall remotely aggregate environmental sensor data with environmental data collected from maintenance and construction vehicles. | Planned |
| *Requirement:* | 10 | The field element shall provide weather and road surface condition data to centers. | Planned |
| *Element:* **MDOT District 6 Weigh-in-Motion Stations** | | | |
| *Entity:* **Commercial Vehicle Check** | | | |
| *Functional Area:* | **Roadside WIM** Roadside check facility equipment to detect and measure the weight commercial vehicles at high speed. Can include an interface to the credential checking or it can be a stand alone package with display. | | |
| *Requirement:* | 1 | The roadside check facility equipment shall detect the presence of commercial vehicles and freight equipment approaching a facility. Sensors can differentiate between different types of vehicles and determine the number of axles, gross vehicle weight, weight per axle, and the identification of the vehicle and its cargo. | Existing |
| *Requirement:* | 2 | The roadside check facility equipment shall request and input electronic screening data from the commercial vehicle's electronic tag data. | Existing |
| *Requirement:* | 3 | The roadside check facility equipment shall send a pass/pull-in notification to the commercial vehicle and its driver based on the information received from the vehicle and the measurements taken. The message may be sent to the on-board equipment in the commercial vehicle or transmitted to the driver using equipment such as dynamic message signs, red-green lights, flashing signs, etc. | Existing |

| Architecture | | Status |
|---|---|---|
| **Gulf Region ITS Architecture** | | |
| *Element:* **MDOT ExpressPass Permitting System** | | |
| *Entity:* **Commercial Vehicle Administration** | | |
| *Functional Area:* | **Credentials and Taxes Administration**<br>Manage electronic filing of credentials and tax filing for commercial vehicle operators. Provides commercial vehicle (including HAZMAT) route restrictions. | |
| *Requirement:* | 1 The center shall manage electronic credentials filing and processing for commercial vehicles. | Existing |
| *Requirement:* | 2 The center shall manage the filing of appropriate taxes for the operation of commercial vehicles. | Existing |
| *Requirement:* | 3 The center shall process requests for payments of electronic credentials and tax filing and maintain an interface to a Financial Institution. | Existing |
| *Requirement:* | 4 The center shall exchange credentials and tax information with other commercial vehicle administration centers - either in other states or the federal government. | Existing |
| *Requirement:* | 5 The center shall provide route restrictions information, including hazmat restrictions, to other centers and agencies for distribution to commercial vehicle operators. These centers and agencies may include commercial fleet and freight management operators, traveler information centers, digital map update providers, and other commercial vehicle administration centers. | Existing |
| *Requirement:* | 6 The center shall use information on asset restrictions received from maintenance centers to develop the commercial vehicle route restrictions and process credentials applications. | Existing |
| *Requirement:* | 7 The center shall provide an interface with commercial vehicle fleet and freight management centers to exchange audit and compliance review reports. | Existing |
| *Requirement:* | 8 The center shall provide credentials information about commercial vehicle operators and carriers to authorized requestors such as insurance agencies. | Existing |
| *Requirement:* | 9 The center shall receive and store information on commercial vehicle violations from enforcement agencies as part of the processing of credentials applications. | Existing |
| *Functional Area:* | **CV Information Exchange**<br>Exchange information concerning safety, credentialing, and operations of commercial vehicles between the center and the roadside check stations, across jurisdictions, with fleet operators, enforcement agencies, and other information requestors. | |
| *Requirement:* | 1 The center shall exchange information with roadside check facilities, including credentials and credentials status information, safety status information, daily site activity data, and citations. | Existing |
| *Requirement:* | 2 The center shall exchange safety and credentials data among other commercial vehicle administration centers; includes border clearance status, credentials information, credentials status information, and safety status information. | Existing |
| *Requirement:* | 3 The center shall package data concerning commercial vehicle safety and credentials into snapshots (top-level summary and critical status information). | Existing |

| Architecture | | Status |
|---|---|---|
| **Gulf Region ITS Architecture** | | |
| *Element:* **MDOT ExpressPass Permitting System** | | |
| *Entity:* **Commercial Vehicle Administration** | | |
| *Functional Area:* **CV Information Exchange** Exchange information concerning safety, credentialing, and operations of commercial vehicles between the center and the roadside check stations, across jurisdictions, with fleet operators, enforcement agencies, and other information requestors. | | |
| *Requirement:* | 4 The center shall package data concerning commercial vehicle safety and credentials into profiles (detailed and historical data). | Existing |
| *Requirement:* | 5 The center shall provide commercial vehicle accident reports and citations to enforcement agencies. | Existing |
| *Requirement:* | 6 The center shall provide commercial vehicle credentials and safety status information to authorized requestors such as insurance agencies. | Existing |
| *Requirement:* | 7 The center shall provide reports to the commercial vehicle fleet manager regarding fleet activity through roadside facilities including accident reports, citations, credentials status information, and safety status information. | Existing |
| *Element:* **MDOT Highway Performance Monitoring System** | | |
| *Entity:* **Archived Data Management Subsystem** | | |
| *Functional Area:* **ITS Data Repository** Collect and maintain data and data catalogs from one or more data sources. May include quality checks, error notification, and archive coordination. | | |
| *Requirement:* | 1 The center shall collect data to be archived from one or more data sources. | Existing |
| *Requirement:* | 2 The center shall collect data catalogs from one or more data sources. A catalog describes the data contained in the collection of archived data and may include descriptions of the schema or structure of the data, a description of the contents of the data; e.g., time range of entries, number of entries; or a sample of the data (e. g. a thumbnail). | Existing |
| *Requirement:* | 3 The center shall store the archived data in a focused repository that is suited to a particular set of ITS data users. | Existing |
| *Requirement:* | 4 The center shall include capabilities for performing quality checks on the incoming archived data. | Existing |
| *Requirement:* | 5 The center shall include capabilities for error notification on the incoming archived data. | Existing |
| *Requirement:* | 6 The center shall include capabilities for archive to archive coordination. | Existing |
| *Requirement:* | 7 The center shall support a broad range of archived data management implementations, ranging from simple data marts that collect a focused set of data and serve a particular user community to large-scale data warehouses that collect, integrate, and summarize transportation data from multiple sources and serve a broad array of users within a region. | Existing |
| *Requirement:* | 8 The center shall perform quality checks on received data. | Existing |
| *Requirement:* | 9 The center shall provide the capability to execute methods on the incoming data such as cleansing, summarizations, aggregations, or transformations applied to the data before it is stored in the archive. | Existing |

| Architecture | | Status |
|---|---|---|
| **Gulf Region ITS Architecture** | | |
| *Element:* **MDOT Highway Performance Monitoring System** | | |
| *Entity:* **Archived Data Management Subsystem** | | |
| *Functional Area:* **ITS Data Repository** Collect and maintain data and data catalogs from one or more data sources. May include quality checks, error notification, and archive coordination. | | |
| *Requirement:* | 10 The center shall respond to requests from the administrator interface function to maintain the archive data. | Existing |
| *Requirement:* | 11 When data or a catalog of data is received from the archive, the center shall generate the requested data product for the users systems. | Existing |
| *Functional Area:* **Traffic and Roadside Data Archival** Collects and archives traffic and environmental information directly from the roadside for use in off-line planning, research, and analysis. | | |
| *Requirement:* | 1 The center shall manage the collection of archive data directly from collection equipment located at the roadside. | Existing |
| *Requirement:* | 2 The center shall collect traffic sensor information from roadside devices. | Existing |
| *Requirement:* | 4 The center shall respond to requests from the Archive Data Administer to input the parameters that control the collection process. | Existing |
| *Requirement:* | 5 The center shall send the request for data and control parameters to the field equipment where the information is collected and returned. | Existing |
| *Requirement:* | 6 The center shall record the status about the imported traffic and roadside data. | Existing |
| *Requirement:* | 7 The center shall use the status information to adjust the collection of traffic and roadside data. | Existing |
| *Functional Area:* **Government Reporting Systems Support** Selects and formats data residing in an ITS archive to facilitate local, state, and federal government data reporting requirements. | | |
| *Requirement:* | 1 The center shall provide data from an ITS archive to federal, state, or local government reporting systems. | Existing |
| *Requirement:* | 2 The center shall provide the capability to select data from an ITS archive for use in government reports. | Existing |
| *Requirement:* | 3 The center shall provide the capability to format data from an ITS archive suitable for input into government reports. | Existing |
| *Requirement:* | 4 The center shall support requests for ITS archived data from Government Reporting Systems. | Existing |
| *Requirement:* | 5 The center shall provide the applicable meta-data for any ITS archived data to satisfy government reporting system requests. Meta-data may include attributes that describe the source and quality of the data and the conditions surrounding the collection of the data. | Existing |
| *Functional Area:* **On-Line Analysis and Mining** Advanced data analysis and mining features to support discovery of information, patterns, and correlations in large ITS archives. | | |
| *Requirement:* | 1 The center shall support the interface with Archive Data User Systems for requests for analysis of the archive data. | Existing |

| Architecture | | Status |
|---|---|---|
| **Gulf Region ITS Architecture** | | |
| *Element:* **MDOT Highway Performance Monitoring System** | | |
| *Entity:* **Archived Data Management Subsystem** | | |
| *Functional Area:* **On-Line Analysis and Mining** Advanced data analysis and mining features to support discovery of information, patterns, and correlations in large ITS archives. | | |
| *Requirement:* | 2 The center shall provide the capability to perform activities such as data mining, data fusion, summarizations, aggregations, and recreation from archive data. This may include multidimensional analysis, selective summarization and expansion of data details, and many other advanced analysis services. | Existing |
| *Requirement:* | 3 The center shall receive the user's systems requests and develop the request to retrieve the data from the archive. | Existing |
| *Requirement:* | 4 The center shall respond to users systems requests for a catalog of the archived data analysis products available. | Existing |
| *Element:* **MDOT MSTraffic.com** | | |
| *Entity:* **Information Service Provider** | | |
| *Functional Area:* **ISP Traveler Data Collection** Collects traveler information from other centers, consolidates and refines the collected data, and makes this data available to traveler information applications. | | |
| *Requirement:* | 1 The center shall collect, process, and store traffic and highway condition information, including incident information, detours and road closures, event information, recommended routes, and current speeds on specific routes. | Existing |
| *Requirement:* | 2 The center shall collect, process, and store maintenance and construction information, including scheduled maintenance and construction work activities and work zone activities. | Existing |
| *Requirement:* | 6 The center shall collect, process, and store weather information. | Existing |
| *Functional Area:* **Basic Information Broadcast** Collection, processing, storage, and broadcast dissemination of traffic, transit, maintenance and construction, event, and weather information to traveler interface systems and vehicles. | | |
| *Requirement:* | 1 The center shall collect, process, store, and disseminate traffic and highway condition information to travelers, including incident information, detours and road closures, event information, recommended routes, and current speeds on specific routes. | Existing |
| *Requirement:* | 2 The center shall collect, process, store, and disseminate maintenance and construction information to travelers, including scheduled maintenance and construction work activities and work zone activities. | Existing |
| *Requirement:* | 6 The center shall collect, process, store, and disseminate weather information to travelers. | Existing |
| *Requirement:* | 10 The center shall provide the capability for a system operator to control the type and update frequency of broadcast traveler information. | Existing |
| *Functional Area:* **ISP Emergency Traveler Information** Collection and distribution of emergency information to the traveler public, including evacuation information and wide-area alerts. | | |

| Architecture | | Status |
|---|---|---|
| **Gulf Region ITS Architecture** | | |
| *Element:* **MDOT MSTraffic.com** | | |
| *Entity:* **Information Service Provider** | | |
| *Functional Area:* **ISP Emergency Traveler Information** Collection and distribution of emergency information to the traveler public, including evacuation information and wide-area alerts. | | |
| *Requirement:* | 1 The center shall collect and provide to the traveler interface systems emergency evacuation information, including evacuation zones, shelter information, available transportation modes, road closures and detours, changes to transit services, and traffic and road conditions at the origin, destination, and along the evacuation routes. | Planned |
| *Requirement:* | 2 The center shall provide evacuation information to shelter providers. | Planned |
| *Requirement:* | 3 The center shall collect and provide wide-area alert information to the traveler interface system with region-specific data, including major emergencies such as a natural or man-made disaster, civil emergency, child abductions, severe weather watches and warnings, military activities, and law enforcement warnings. | Planned |
| *Requirement:* | 4 The center shall provide the capability for a system operator to control the type and update frequency of emergency and wide-area alert information distributed to travelers. | Planned |
| *Element:* **MDOT Statewide 511 System** | | |
| *Entity:* **Information Service Provider** | | |
| *Functional Area:* **ISP Traveler Data Collection** Collects traveler information from other centers, consolidates and refines the collected data, and makes this data available to traveler information applications. | | |
| *Requirement:* | 1 The center shall collect, process, and store traffic and highway condition information, including incident information, detours and road closures, event information, recommended routes, and current speeds on specific routes. | Planned |
| *Requirement:* | 2 The center shall collect, process, and store maintenance and construction information, including scheduled maintenance and construction work activities and work zone activities. | Planned |
| *Requirement:* | 3 The center shall collect, process, and store transit routes and schedules, transit transfer options, transit fares, and real-time schedule adherence information. | Planned |
| *Functional Area:* **Traveler Telephone Information** Collection and distribution of traveler information and wide-area alerts to traveler telephone information systems such as 511, based on voice-based traveler requests. | | |
| *Requirement:* | 1 The center shall provide the capability to process voice-formatted requests for traveler information from a traveler telephone information system, and return the information in the requested format. | Planned |
| *Requirement:* | 2 The center shall provide the capability to process dual-tone multifrequency (DTMF)-based requests (touch-tone) for traveler information from a traveler telephone information system. | Planned |

| Architecture | | Status |
|---|---|---|
| **Gulf Region ITS Architecture** | | |
| *Element:* **MDOT Statewide 511 System** | | |
| *Entity:* **Information Service Provider** | | |
| *Functional Area:* **Traveler Telephone Information** Collection and distribution of traveler information and wide-area alerts to traveler telephone information systems such as 511, based on voice-based traveler requests. | | |
| *Requirement:* | 3 The center shall provide the capability to process traveler information requests from a traveler telephone information system. | Planned |
| *Requirement:* | 4 The center shall collect and provide information on traffic conditions in the requested voice format and for the requested location. | Planned |
| *Requirement:* | 5 The center shall collect and provide work zone and roadway maintenance information in the requested voice format and for the requested location. | Planned |
| *Requirement:* | 8 The center shall collect and provide transit service information in the requested voice format and for the requested location. | Planned |
| *Requirement:* | 11 The center shall provide the capability to support both specific caller requests as well as bulk upload of regional traveler information. | Planned |
| *Requirement:* | 12 The center shall receive and forward region-specific wide-area alert and advisory information to the traveler telephone information system, including major emergencies such as a natural or man-made disaster, civil emergency, child abductions, severe weather watches and warnings, military activities, and law enforcement warnings. | Planned |
| *Functional Area:* **ISP Emergency Traveler Information** Collection and distribution of emergency information to the traveler public, including evacuation information and wide-area alerts. | | |
| *Requirement:* | 1 The center shall collect and provide to the traveler interface systems emergency evacuation information, including evacuation zones, shelter information, available transportation modes, road closures and detours, changes to transit services, and traffic and road conditions at the origin, destination, and along the evacuation routes. | Planned |
| *Requirement:* | 3 The center shall collect and provide wide-area alert information to the traveler interface system with region-specific data, including major emergencies such as a natural or man-made disaster, civil emergency, child abductions, severe weather watches and warnings, military activities, and law enforcement warnings. | Planned |
| *Requirement:* | 4 The center shall provide the capability for a system operator to control the type and update frequency of emergency and wide-area alert information distributed to travelers. | Planned |
| *Element:* **MDOT Traveler Information Repository** | | |
| *Entity:* **Information Service Provider** | | |
| *Functional Area:* **ISP Traveler Data Collection** Collects traveler information from other centers, consolidates and refines the collected data, and makes this data available to traveler information applications. | | |

| Architecture | | Status |
|---|---|---|
| **Gulf Region ITS Architecture** | | |
| *Element:* **MDOT Traveler Information Repository** | | |
| *Entity:* **Information Service Provider** | | |
| *Functional Area:* **ISP Traveler Data Collection**<br>Collects traveler information from other centers, consolidates and refines the collected data, and makes this data available to traveler information applications. | | |
| *Requirement:* | 1 The center shall collect, process, and store traffic and highway condition information, including incident information, detours and road closures, event information, recommended routes, and current speeds on specific routes. | Planned |
| *Requirement:* | 2 The center shall collect, process, and store maintenance and construction information, including scheduled maintenance and construction work activities and work zone activities. | Planned |
| *Requirement:* | 3 The center shall collect, process, and store transit routes and schedules, transit transfer options, transit fares, and real-time schedule adherence information. | Planned |
| *Requirement:* | 4 The center shall collect, process, and store parking information, including location, availability, and fees. | Planned |
| *Requirement:* | 6 The center shall collect, process, and store weather information. | Planned |
| *Requirement:* | 7 The center shall collect, process, and store event information. | Planned |
| *Requirement:* | 8 The center shall collect, process, and store air quality information. | Planned |
| *Functional Area:* **ISP Emergency Traveler Information**<br>Collection and distribution of emergency information to the traveler public, including evacuation information and wide-area alerts. | | |
| *Requirement:* | 1 The center shall collect and provide to the traveler interface systems emergency evacuation information, including evacuation zones, shelter information, available transportation modes, road closures and detours, changes to transit services, and traffic and road conditions at the origin, destination, and along the evacuation routes. | Planned |
| *Requirement:* | 2 The center shall provide evacuation information to shelter providers. | Planned |
| *Requirement:* | 3 The center shall collect and provide wide-area alert information to the traveler interface system with region-specific data, including major emergencies such as a natural or man-made disaster, civil emergency, child abductions, severe weather watches and warnings, military activities, and law enforcement warnings. | Planned |
| *Requirement:* | 4 The center shall provide the capability for a system operator to control the type and update frequency of emergency and wide-area alert information distributed to travelers. | Planned |
| *Element:* **MEMA Emergency Operations Center** | | |
| *Entity:* **Emergency Management** | | |
| *Functional Area:* **Incident Command**<br>Tactical decision support, resource coordination, and communications integration among emergency management agencies for Incident Commands that are established by first responders to support local management of an incident. | | |

| Architecture | | Status |
|---|---|---|
| **Gulf Region ITS Architecture** | | |
| *Element:* **MEMA Emergency Operations Center** | | |
| *Entity:* **Emergency Management** | | |
| *Functional Area:* **Incident Command**<br>Tactical decision support, resource coordination, and communications integration among emergency management agencies for Incident Commands that are established by first responders to support local management of an incident. | | |
| *Requirement:* | 1 The center shall provide tactical decision support, resource coordination, and communications integration for Incident Commands that are established by first responders to support local management of an incident. | Existing |
| *Requirement:* | 2 The center shall provide incident command communications with public safety, emergency management, transportation, and other allied response agency centers. | Existing |
| *Requirement:* | 3 The center shall track and maintain resource information and action plans pertaining to the incident command. | Existing |
| *Requirement:* | 4 The center shall share incident command information with other public safety agencies including resource deployment status, hazardous material information, rail incident information, evacuation advice as well as traffic, road, and weather conditions. | Existing |
| *Requirement:* | 5 The center shall assess the status of responding emergency vehicles as part of an incident command. | Existing |
| *Functional Area:* **Emergency Early Warning System**<br>Monitors alerting and advisory systems, information collected by ITS surveillance and sensors, and reports from other agencies in order to identify potential, imminent, or in-progress major incidents or disasters. Notification is provided to other ITS centers to notify the traveling public. | | |
| *Requirement:* | 1 The center shall monitor information from Alerting and Advisory Systems such as the Information Sharing and Analysis Centers (ISACs), the National Infrastructure Protection Center (NIPC), the Homeland Security Advisory System (HSAS), etc. The information may include assessments (general incident and vulnerability awareness information), advisories (identification of threats or recommendations to increase preparedness levels), or alerts (information on imminent or in-progress emergencies). | Existing |
| *Requirement:* | 2 The center shall provide the capability to correlate alerts and advisories, incident information, and security sensor and surveillance data. | Existing |
| *Requirement:* | 3 The center shall broadcast wide-area alerts and advisories to traffic management centers for emergency situations such as severe weather events, civil emergencies, child abduction (AMBER alert system), military activities, and other situations that pose a threat to life and property. | Existing |
| *Requirement:* | 4 The center shall broadcast wide-area alerts and advisories to transit management centers for emergency situations such as severe weather events, civil emergencies, child abduction (AMBER alert system), military activities, and other situations that pose a threat to life and property. | Existing |

| Architecture | | Status |
|---|---|---|
| **Gulf Region ITS Architecture** | | |
| *Element:* **MEMA Emergency Operations Center** | | |
| *Entity:* **Emergency Management** | | |
| *Functional Area:* | **Emergency Early Warning System**<br>Monitors alerting and advisory systems, information collected by ITS surveillance and sensors, and reports from other agencies in order to identify potential, imminent, or in-progress major incidents or disasters. Notification is provided to other ITS centers to notify the traveling public. | |
| *Requirement:* | 5 The center shall broadcast wide-area alerts and advisories to toll administration centers for emergency situations such as severe weather events, civil emergencies, child abduction (AMBER alert system), military activities, and other situations that pose a threat to life and property. | Existing |
| *Requirement:* | 6 The center shall broadcast wide-area alerts and advisories to traveler information service providers for emergency situations such as severe weather events, civil emergencies, child abduction (AMBER alert system), military activities, and other situations that pose a threat to life and property. | Existing |
| *Requirement:* | 7 The center shall broadcast wide-area alerts and advisories to maintenance centers for emergency situations such as severe weather events, civil emergencies, child abduction (AMBER alert system), military activities, and other situations that pose a threat to life and property. | Existing |
| *Requirement:* | 8 The center shall broadcast wide-area alerts and advisories to other emergency management centers for emergency situations such as severe weather events, civil emergencies, child abduction (AMBER alert system), military activities, and other situations that pose a threat to life and property. | Existing |
| *Requirement:* | 9 The center shall process status information from each of the centers that have been sent the wide-area alert. | Existing |
| *Requirement:* | 10 The center shall coordinate the broadcast of wide-area alerts and advisories with other emergency management centers. | Existing |
| *Requirement:* | 11 The center shall receive incident information from other transportation management centers to support the early warning system. | Existing |
| *Requirement:* | 12 The center shall present the alert and advisory information and the status of the actions taken in response to the alert by the other centers to the emergency system operator as received from other system inputs. | Existing |
| *Requirement:* | 13 The center shall support the entry of alert and advisory information directly from the emergency system operator. | Existing |
| *Functional Area:* | **Emergency Response Management**<br>Strategic emergency planning and response capabilities and broad inter-agency interfaces to support large-scale incidents and disasters, commonly associated with Emergency Operations Centers. | |
| *Requirement:* | 1 The center shall provide strategic emergency response capabilities such as that of an Emergency Operations Center for large-scale incidents and disasters. | Existing |

| Architecture | | | Status |
|---|---|---|---|
| **Gulf Region ITS Architecture** | | | |
| *Element:* **MEMA Emergency Operations Center** | | | |
| *Entity:* **Emergency Management** | | | |
| *Functional Area:* | **Emergency Response Management**<br>Strategic emergency planning and response capabilities and broad inter-agency interfaces to support large-scale incidents and disasters, commonly associated with Emergency Operations Centers. | | |
| *Requirement:* | 2 | The center shall manage coordinated inter-agency responses to and recovery from large-scale emergencies. Such agencies include traffic management, transit, maintenance and construction management, rail operations, and other emergency management agencies. | Existing |
| *Requirement:* | 3 | The center shall provide the capability to implement response plans and track progress through the incident by exchanging incident information and distributing response status to allied agencies. | Existing |
| *Requirement:* | 4 | The center shall develop, coordinate with other agencies, and store emergency response plans. | Existing |
| *Requirement:* | 5 | The center shall track the availability of resources (including vehicles, roadway cleanup, etc.), request additional resources from traffic, maintenance, or other emergency centers if needed. | Existing |
| *Requirement:* | 6 | The center shall allocate the appropriate emergency services, resources, and vehicle (s) to respond to incidents, and shall provide the capability to override the current allocation to suit the special needs of a current incident. | Existing |
| *Requirement:* | 10 | The center shall provide the capability to request transit resource availability from transit centers for use during disaster and evacuation operations. | Existing |
| *Requirement:* | 11 | The center shall assimilate the status of the transit, traffic, rail, maintenance, and other emergency center services and systems to create an overall transportation system status, and disseminate to each of these centers and the traveling public via traveler information providers. | Existing |
| *Requirement:* | 12 | The center shall provide information to the media concerning the status of an emergency response. | Existing |
| *Requirement:* | 13 | The center shall provide the capability for digitized map data to act as the background to the information presented to the emergency system operator. | Existing |
| *Requirement:* | 14 | The center shall provide the capability for center personnel to provide inputs to the management of incidents, disasters and evacuations. | Existing |
| *Functional Area:* | **Emergency Evacuation Support**<br>Evacuation planning and coordination to manage evacuation and reentry of a population in the vicinity of a disaster or other emergency that poses a risk to public safety. | | |
| *Requirement:* | 1 | The center shall manage inter-agency coordination of evacuation operations, from initial planning through the evacuation process and reentry. | Existing |
| *Requirement:* | 2 | The center shall develop and exchange evacuation plans with allied agencies prior to the occurrence of a disaster. | Existing |

| Architecture | | | Status |
|---|---|---|---|
| **Gulf Region ITS Architecture** | | | |
| *Element:* **MEMA Emergency Operations Center** | | | |
| *Entity:* **Emergency Management** | | | |
| *Functional Area:* | **Emergency Evacuation Support**<br>Evacuation planning and coordination to manage evacuation and reentry of a population in the vicinity of a disaster or other emergency that poses a risk to public safety. | | |
| *Requirement:* | 3 | The center shall provide an interface to the emergency system operator to enter evacuation plans and procedures and present the operator with other agencies' plans. | Existing |
| *Requirement:* | 4 | The center shall coordinate evacuation destinations and shelter needs with shelter providers (e.g., the American Red Cross) in the region. | Existing |
| *Requirement:* | 5 | The center shall provide evacuation information to traffic, transit, maintenance and construction, rail operations, and other emergency management centers as needed. | Existing |
| *Requirement:* | 6 | The center shall request resources from transit agencies as needed to support the evacuation. | Existing |
| *Requirement:* | 7 | The center shall request traffic management agencies to implement special traffic control strategies and to control evacuation traffic, including traffic on local streets and arterials as well as the major evacuation routes. | Existing |
| *Requirement:* | 8 | The center shall provide traveler information systems with evacuation guidance including basic information to assist potential evacuees in determining whether evacuation is necessary and when it is safe to return. | Existing |
| *Requirement:* | 9 | The center shall monitor the progress or status of the evacuation once it begins and exchange tactical plans, prepared during the incident, with allied agencies. | Existing |
| *Requirement:* | 10 | The center shall monitor the progress of the reentry process. | Existing |
| *Functional Area:* | **Emergency Environmental Monitoring**<br>Current and forecast road and weather information assimilated from weather service providers and emergency vehicles equipped with environmental sensors; used by the operator to more effectively manage incidents. | | |
| *Requirement:* | 1 | The center shall collect current and forecast road and weather information from weather service providers (such as the National Weather Service and value-added sector specific meteorological services). | Existing |
| *Requirement:* | 3 | The center shall collect current road and weather information from roadway maintenance operations. | Existing |
| *Requirement:* | 4 | The center shall assimilate current and forecast road conditions and surface weather information to support incident management. | Existing |
| *Requirement:* | 5 | The center shall present the current and forecast road and weather information to the emergency system operator. | Existing |
| *Element:* **MHP Dispatch Centers** | | | |
| *Entity:* **Emergency Management** | | | |
| *Functional Area:* | **Emergency Call-Taking** | | |

| Architecture | | Status |
|---|---|---|
| **Gulf Region ITS Architecture** | | |
| *Element:* **MHP Dispatch Centers** | | |
| *Entity:* **Emergency Management** | | |
| *Functional Area:* | **Emergency Call-Taking**<br>Provides interface to the emergency call-taking systems such as the Emergency Telecommunications System (e.g., 911) that correlate call information with emergencies reported by transit agencies, commercial vehicle operators, or other public safety agencies. Allows the operator to verify the incident and forward the information to the responding agencies. | |
| *Requirement:* | 1 The center shall support the interface to the Emergency Telecommunications System (e.g. 911 or 7-digit call routing) to receive emergency notification information and provide it to the emergency system operator. | Existing |
| *Requirement:* | 2 The center shall receive emergency call information from 911 services and present the possible incident information to the emergency system operator. | Existing |
| *Requirement:* | 3 The center shall receive emergency call information from motorist call-boxes and present the possible incident information to the emergency system operator. | Existing |
| *Requirement:* | 4 The center shall receive emergency call information from mayday service providers and present the possible incident information to the emergency system operator. | Existing |
| *Requirement:* | 5 The center shall receive emergency notification information from other public safety agencies and present the possible incident information to the emergency system operator. | Existing |
| *Requirement:* | 6 The center shall receive emergency notification information from public transit systems and present the possible incident information to the emergency system operator. | Existing |
| *Requirement:* | 7 The center shall coordinate, correlate, and verify all emergency inputs, including those identified based on external calls and internal analysis of security sensor and surveillance data, and assign each a level of confidence. | Existing |
| *Requirement:* | 9 The center shall forward the verified emergency information to the responding agency based on the location and nature of the emergency. | Existing |
| *Requirement:* | 10 The center shall update the incident information log once the emergency system operator has verified the incident. | Existing |
| *Requirement:* | 11 The center shall provide the capability for digitized map data to act as the background to the emergency information presented to the emergency system operator. | Existing |
| *Functional Area:* | **Emergency Dispatch**<br>Dispatch emergency vehicles to incidents, tracking their location and status. Pertinent incident information is gathered and relayed to the responding units. | |
| *Requirement:* | 1 The center shall dispatch emergency vehicles to respond to verified emergencies under center personnel control. | Existing |
| *Requirement:* | 2 The center shall store the current status of all emergency vehicles available for dispatch and those that have been dispatched. | Existing |
| *Requirement:* | 3 The center shall relay location and incident details to the responding vehicles. | Existing |

| Architecture | | Status |
|---|---|---|
| **Gulf Region ITS Architecture** | | |
| *Element:* **MHP Dispatch Centers** | | |
| *Entity:* **Emergency Management** | | |
| *Functional Area:* **Emergency Dispatch** Dispatch emergency vehicles to incidents, tracking their location and status. Pertinent incident information is gathered and relayed to the responding units. | | |
| *Requirement:* | 4 The center shall track the location and status of emergency vehicles responding to an emergency based on information from the emergency vehicle. | Existing |
| *Requirement:* | 5 The center shall store and maintain the emergency service responses in an action log. | Existing |
| *Requirement:* | 6 The center shall provide the capability for digitized map data to act as the background to the information presented to the emergency system operator. | Existing |
| *Requirement:* | 7 The center shall receive traffic images to support dispatch of emergency vehicles. | Existing |
| *Requirement:* | 9 The center shall coordinate response to incidents with other Emergency Management centers to ensure appropriate resources are dispatched and utilized. | Existing |
| *Functional Area:* **Emergency Routing** Routing of emergency vehicles to facilitate the quickest/safest arrival. Routes may be determined based on real-time traffic information and road conditions or routes may be provided by Traffic Management on request. | | |
| *Requirement:* | 1 The center shall collect current traffic and road condition information from traffic management centers for emergency vehicle route calculation. | Existing |
| *Requirement:* | 2 The center shall receive inputs from traffic management and maintenance centers on the location and status of traffic control equipment and work zones along potential emergency routes. | Existing |
| *Requirement:* | 4 The center shall receive asset restriction information from maintenance centers to support the dispatching of appropriate emergency resources. | Existing |
| *Requirement:* | 7 The center shall provide the capability to request special traffic control measures, such as signal preemption, from the traffic management center to facilitate emergency vehicle progress along the suggested route. | Existing |
| *Requirement:* | 9 The center shall provide the capability for digitized map data to act as the background to the information presented to the emergency system operator. | Existing |
| *Functional Area:* **Incident Command** Tactical decision support, resource coordination, and communications integration among emergency management agencies for Incident Commands that are established by first responders to support local management of an incident. | | |
| *Requirement:* | 1 The center shall provide tactical decision support, resource coordination, and communications integration for Incident Commands that are established by first responders to support local management of an incident. | Existing |

| Architecture | | Status |
|---|---|---|
| **Gulf Region ITS Architecture** | | |
| *Element:* **MHP Dispatch Centers** | | |
| *Entity:* **Emergency Management** | | |
| *Functional Area:* **Incident Command**<br>Tactical decision support, resource coordination, and communications integration among emergency management agencies for Incident Commands that are established by first responders to support local management of an incident. | | |
| *Requirement:* | 2 The center shall provide incident command communications with public safety, emergency management, transportation, and other allied response agency centers. | Existing |
| *Requirement:* | 3 The center shall track and maintain resource information and action plans pertaining to the incident command. | Existing |
| *Requirement:* | 4 The center shall share incident command information with other public safety agencies including resource deployment status, hazardous material information, rail incident information, evacuation advice as well as traffic, road, and weather conditions. | Existing |
| *Requirement:* | 5 The center shall assess the status of responding emergency vehicles as part of an incident command. | Existing |
| *Functional Area:* **Emergency Response Management**<br>Strategic emergency planning and response capabilities and broad inter-agency interfaces to support large-scale incidents and disasters, commonly associated with Emergency Operations Centers. | | |
| *Requirement:* | 1 The center shall provide strategic emergency response capabilities such as that of an Emergency Operations Center for large-scale incidents and disasters. | Existing |
| *Requirement:* | 2 The center shall manage coordinated inter-agency responses to and recovery from large-scale emergencies. Such agencies include traffic management, transit, maintenance and construction management, rail operations, and other emergency management agencies. | Existing |
| *Requirement:* | 3 The center shall provide the capability to implement response plans and track progress through the incident by exchanging incident information and distributing response status to allied agencies. | Existing |
| *Requirement:* | 4 The center shall develop, coordinate with other agencies, and store emergency response plans. | Existing |
| *Requirement:* | 5 The center shall track the availability of resources (including vehicles, roadway cleanup, etc.), request additional resources from traffic, maintenance, or other emergency centers if needed. | Existing |
| *Requirement:* | 6 The center shall allocate the appropriate emergency services, resources, and vehicle (s) to respond to incidents, and shall provide the capability to override the current allocation to suit the special needs of a current incident. | Existing |
| *Requirement:* | 7 The center shall receive event scheduling information from Event Promoters. | Existing |
| *Requirement:* | 14 The center shall provide the capability for center personnel to provide inputs to the management of incidents, disasters and evacuations. | Existing |
| *Functional Area:* **Emergency Evacuation Support** | | |

| Architecture | | | Status |
|---|---|---|---|
| **Gulf Region ITS Architecture** | | | |
| *Element:* **MHP Dispatch Centers** | | | |
| *Entity:* **Emergency Management** | | | |
| *Functional Area:* | **Emergency Evacuation Support**<br>Evacuation planning and coordination to manage evacuation and reentry of a population in the vicinity of a disaster or other emergency that poses a risk to public safety. | | |
| *Requirement:* | 1 | The center shall manage inter-agency coordination of evacuation operations, from initial planning through the evacuation process and reentry. | Existing |
| *Requirement:* | 2 | The center shall develop and exchange evacuation plans with allied agencies prior to the occurrence of a disaster. | Existing |
| *Requirement:* | 3 | The center shall provide an interface to the emergency system operator to enter evacuation plans and procedures and present the operator with other agencies' plans. | Existing |
| *Requirement:* | 6 | The center shall request resources from transit agencies as needed to support the evacuation. | Existing |
| *Requirement:* | 7 | The center shall request traffic management agencies to implement special traffic control strategies and to control evacuation traffic, including traffic on local streets and arterials as well as the major evacuation routes. | Existing |
| *Requirement:* | 8 | The center shall provide traveler information systems with evacuation guidance including basic information to assist potential evacuees in determining whether evacuation is necessary and when it is safe to return. | Existing |
| *Requirement:* | 9 | The center shall monitor the progress or status of the evacuation once it begins and exchange tactical plans, prepared during the incident, with allied agencies. | Existing |
| *Requirement:* | 10 | The center shall monitor the progress of the reentry process. | Existing |
| *Functional Area:* | **Emergency Environmental Monitoring**<br>Current and forecast road and weather information assimilated from weather service providers and emergency vehicles equipped with environmental sensors; used by the operator to more effectively manage incidents. | | |
| *Requirement:* | 1 | The center shall collect current and forecast road and weather information from weather service providers (such as the National Weather Service and value-added sector specific meteorological services). | Existing |
| *Requirement:* | 3 | The center shall collect current road and weather information from roadway maintenance operations. | Existing |
| *Requirement:* | 4 | The center shall assimilate current and forecast road conditions and surface weather information to support incident management. | Existing |
| *Requirement:* | 5 | The center shall present the current and forecast road and weather information to the emergency system operator. | Existing |
| *Functional Area:* | **Emergency Commercial Vehicle Response**<br>Responds to commercial vehicle and freight equipment related emergencies. Includes incidents involving hazardous materials as well as the detection of non-permitted transport of security sensitive hazmat. | | |

| Architecture | | Status |
|---|---|---|
| **Gulf Region ITS Architecture** | | |
| *Element:* **MHP Dispatch Centers** | | |
| *Entity:* **Emergency Management** | | |
| *Functional Area:* | **Emergency Commercial Vehicle Response**<br>Responds to commercial vehicle and freight equipment related emergencies. Includes incidents involving hazardous materials as well as the detection of non-permitted transport of security sensitive hazmat. | |
| *Requirement:* | 1 The center shall receive emergency notification information from commercial vehicles, commercial vehicle check stations, or commercial fleet operators and present the possible incident information to the emergency system operator. This may include detection of non-permitted transport of security sensitive hazmat, hazardous cargo spills, etc. | Planned |
| *Requirement:* | 2 The center shall receive details of the cargo being carried by commercial vehicles from their commercial fleet manager for incidents involving potential hazardous materials. | Planned |
| *Requirement:* | 3 The center shall forward the verified emergency information to the responding agency based on the location and nature of the emergency. | Planned |
| *Requirement:* | 4 The center shall provide the capability to request Fleet and Freight Management to disable a specific vehicle in their fleet. | Planned |
| *Functional Area:* | **Emergency Data Collection**<br>Collection and storage of information related to Emergency Management. For use by operations personnel or data archives in the region. | |
| *Requirement:* | 1 The center shall collect emergency service data, emergency vehicle management data, emergency vehicle data, sensor and surveillance data, threat data, and incident data. | Existing |
| *Element:* **MHP District 8 Offices** | | |
| *Entity:* **Emergency Management** | | |
| *Functional Area:* | **Emergency Response Management**<br>Strategic emergency planning and response capabilities and broad inter-agency interfaces to support large-scale incidents and disasters, commonly associated with Emergency Operations Centers. | |
| *Requirement:* | 3 The center shall provide the capability to implement response plans and track progress through the incident by exchanging incident information and distributing response status to allied agencies. | Existing |
| *Requirement:* | 4 The center shall develop, coordinate with other agencies, and store emergency response plans. | Existing |
| *Requirement:* | 5 The center shall track the availability of resources (including vehicles, roadway cleanup, etc.), request additional resources from traffic, maintenance, or other emergency centers if needed. | Existing |
| *Requirement:* | 6 The center shall allocate the appropriate emergency services, resources, and vehicle (s) to respond to incidents, and shall provide the capability to override the current allocation to suit the special needs of a current incident. | Existing |
| *Requirement:* | 7 The center shall receive event scheduling information from Event Promoters. | Existing |
| *Requirement:* | 14 The center shall provide the capability for center personnel to provide inputs to the management of incidents, disasters and evacuations. | Existing |

| Architecture | | Status |
|---|---|---|
| **Gulf Region ITS Architecture** | | |
| *Element:* **MHP District 8 Offices** | | |
| *Entity:* **Emergency Management** | | |
| *Functional Area:* | **Emergency Data Collection**<br>Collection and storage of information related to Emergency Management. For use by operations personnel or data archives in the region. | |
| *Requirement:* | 1 The center shall collect emergency service data, emergency vehicle management data, emergency vehicle data, sensor and surveillance data, threat data, and incident data. | Existing |
| *Element:* **MHP Emergency Vehicles** | | |
| *Entity:* **Emergency Vehicle Subsystem** | | |
| *Functional Area:* | **On-board EV En Route Support**<br>On-board systems for gathering of dispatch and routing information for emergency vehicle personnel, vehicle tracking, communications with care facilities, and signal preemption via short range communication directly with traffic control equipment at the roadside. | |
| *Requirement:* | 1 The emergency vehicle, including roadway service patrols, shall compute the location of the emergency vehicle based on inputs from a vehicle location determination function. | Planned |
| *Requirement:* | 2 The emergency vehicle, including roadway service patrols, shall send the vehicle's location and operational data to the center for emergency management and dispatch. | Planned |
| *Requirement:* | 3 The emergency vehicle, including roadway service patrols, shall receive incident details and a suggested route when dispatched to a scene. | Existing |
| *Requirement:* | 4 The emergency vehicle shall send the current en route status (including estimated time of arrival) and requests for emergency dispatch updates. | Existing |
| *Requirement:* | 5 The emergency vehicle shall send requests to traffic signal control equipment at the roadside to preempt the signal. | Planned |
| *Requirement:* | 6 The emergency vehicle shall provide the personnel on-board with dispatch information, including incident type and location, and forward an acknowledgment from personnel to the center that the vehicle is on its way to the incident scene. | Existing |
| *Functional Area:* | **On-board EV Incident Management Communication**<br>On-board systems provide communications support to first responders. Incident information is provided to dispatched emergency personnel. Emergency personnel transmit information about the incident and response status. | |
| *Requirement:* | 1 The emergency vehicle shall receive dispatch instructions sufficient to enable emergency personnel in the field to implement an effective incident response. It includes local traffic, road, and weather conditions, hazardous material information, and the current status of resources that have been allocated to an incident. | Existing |
| *Requirement:* | 2 The emergency vehicle shall provide an interface to the center for emergency personnel to transmit information about the incident site such as the extent of injuries, identification of vehicles and people involved, hazardous material, etc. | Existing |

| Architecture | | Status |
|---|---|---|
| **Gulf Region ITS Architecture** | | |
| *Element:* **MHP Emergency Vehicles** | | |
| *Entity:* **Emergency Vehicle Subsystem** | | |
| *Functional Area:* | **On-board EV Incident Management Communication**<br>On-board systems provide communications support to first responders. Incident information is provided to dispatched emergency personnel. Emergency personnel transmit information about the incident and response status. | |
| *Requirement:* | 3 The emergency vehicle shall provide an interface to the center for emergency personnel to transmit information about the current incident response status such as the identification of the resources on site, site management strategies in effect, and current clearance status. clearance status. | Existing |
| *Entity:* **Vehicle** | | |
| *Functional Area:* | **Vehicle Location Determination**<br>Determines current location of the vehicle using GPS or similar location referencing and provides this information to other in-vehicle functions. | |
| *Requirement:* | 1 The vehicle shall provide the vehicle's current location to other in-vehicle functions. | Planned |
| *Requirement:* | 2 The vehicle shall calculate the location from one or more sources of position data. These location referencing systems include position systems such as GPS, DGPS, odometer and differential odometers. | Planned |
| *Requirement:* | 3 The vehicle shall refine its calculations as required by other in-vehicle functions. | Planned |
| *Element:* **Mississippi Bureau of Investigations** | | |
| *Entity:* **Emergency Management** | | |
| *Functional Area:* | **Emergency Early Warning System**<br>Monitors alerting and advisory systems, information collected by ITS surveillance and sensors, and reports from other agencies in order to identify potential, imminent, or in-progress major incidents or disasters. Notification is provided to other ITS centers to notify the traveling public. | |
| *Requirement:* | 1 The center shall monitor information from Alerting and Advisory Systems such as the Information Sharing and Analysis Centers (ISACs), the National Infrastructure Protection Center (NIPC), the Homeland Security Advisory System (HSAS), etc. The information may include assessments (general incident and vulnerability awareness information), advisories (identification of threats or recommendations to increase preparedness levels), or alerts (information on imminent or in-progress emergencies). | Existing |
| *Requirement:* | 2 The center shall provide the capability to correlate alerts and advisories, incident information, and security sensor and surveillance data. | Existing |
| *Requirement:* | 3 The center shall broadcast wide-area alerts and advisories to traffic management centers for emergency situations such as severe weather events, civil emergencies, child abduction (AMBER alert system), military activities, and other situations that pose a threat to life and property. | Planned |

| Architecture | | Status |
|---|---|---|
| **Gulf Region ITS Architecture** | | |
| *Element:* **Mississippi Bureau of Investigations** | | |
| *Entity:* **Emergency Management** | | |
| *Functional Area:* **Emergency Early Warning System**<br>Monitors alerting and advisory systems, information collected by ITS surveillance and sensors, and reports from other agencies in order to identify potential, imminent, or in-progress major incidents or disasters. Notification is provided to other ITS centers to notify the traveling public. | | |
| *Requirement:* | 6 The center shall broadcast wide-area alerts and advisories to traveler information service providers for emergency situations such as severe weather events, civil emergencies, child abduction (AMBER alert system), military activities, and other situations that pose a threat to life and property. | Existing |
| *Requirement:* | 8 The center shall broadcast wide-area alerts and advisories to other emergency management centers for emergency situations such as severe weather events, civil emergencies, child abduction (AMBER alert system), military activities, and other situations that pose a threat to life and property. | Existing |
| *Requirement:* | 9 The center shall process status information from each of the centers that have been sent the wide-area alert. | Existing |
| *Requirement:* | 10 The center shall coordinate the broadcast of wide-area alerts and advisories with other emergency management centers. | Existing |
| *Requirement:* | 11 The center shall receive incident information from other transportation management centers to support the early warning system. | Existing |
| *Requirement:* | 12 The center shall present the alert and advisory information and the status of the actions taken in response to the alert by the other centers to the emergency system operator as received from other system inputs. | Existing |
| *Requirement:* | 13 The center shall support the entry of alert and advisory information directly from the emergency system operator. | Existing |
| *Element:* **Mississippi Department of Environmental Quality** | | |
| *Entity:* **Emergency Management** | | |
| *Functional Area:* **Emergency Commercial Vehicle Response**<br>Responds to commercial vehicle and freight equipment related emergencies. Includes incidents involving hazardous materials as well as the detection of non-permitted transport of security sensitive hazmat. | | |
| *Requirement:* | 1 The center shall receive emergency notification information from commercial vehicles, commercial vehicle check stations, or commercial fleet operators and present the possible incident information to the emergency system operator. This may include detection of non-permitted transport of security sensitive hazmat, hazardous cargo spills, etc. | Planned |
| *Requirement:* | 2 The center shall receive details of the cargo being carried by commercial vehicles from their commercial fleet manager for incidents involving potential hazardous materials. | Planned |
| *Requirement:* | 3 The center shall forward the verified emergency information to the responding agency based on the location and nature of the emergency. | Planned |
| *Requirement:* | 4 The center shall provide the capability to request Fleet and Freight Management to disable a specific vehicle in their fleet. | Planned |

| Architecture | | Status |
|---|---|---|
| **Gulf Region ITS Architecture** | | |
| *Element:* **Mississippi Emergency Management Agency** | | |
| *Entity:* **Emergency Management** | | |
| *Functional Area:* **Incident Command**<br>Tactical decision support, resource coordination, and communications integration among emergency management agencies for Incident Commands that are established by first responders to support local management of an incident. | | |
| *Requirement:* | 1 The center shall provide tactical decision support, resource coordination, and communications integration for Incident Commands that are established by first responders to support local management of an incident. | Existing |
| *Requirement:* | 2 The center shall provide incident command communications with public safety, emergency management, transportation, and other allied response agency centers. | Existing |
| *Requirement:* | 3 The center shall track and maintain resource information and action plans pertaining to the incident command. | Existing |
| *Requirement:* | 4 The center shall share incident command information with other public safety agencies including resource deployment status, hazardous material information, rail incident information, evacuation advice as well as traffic, road, and weather conditions. | Existing |
| *Requirement:* | 5 The center shall assess the status of responding emergency vehicles as part of an incident command. | Existing |
| *Functional Area:* **Emergency Early Warning System**<br>Monitors alerting and advisory systems, information collected by ITS surveillance and sensors, and reports from other agencies in order to identify potential, imminent, or in-progress major incidents or disasters. Notification is provided to other ITS centers to notify the traveling public. | | |
| *Requirement:* | 1 The center shall monitor information from Alerting and Advisory Systems such as the Information Sharing and Analysis Centers (ISACs), the National Infrastructure Protection Center (NIPC), the Homeland Security Advisory System (HSAS), etc. The information may include assessments (general incident and vulnerability awareness information), advisories (identification of threats or recommendations to increase preparedness levels), or alerts (information on imminent or in-progress emergencies). | Existing |
| *Requirement:* | 2 The center shall provide the capability to correlate alerts and advisories, incident information, and security sensor and surveillance data. | Existing |
| *Requirement:* | 3 The center shall broadcast wide-area alerts and advisories to traffic management centers for emergency situations such as severe weather events, civil emergencies, child abduction (AMBER alert system), military activities, and other situations that pose a threat to life and property. | Existing |
| *Requirement:* | 4 The center shall broadcast wide-area alerts and advisories to transit management centers for emergency situations such as severe weather events, civil emergencies, child abduction (AMBER alert system), military activities, and other situations that pose a threat to life and property. | Existing |

| Architecture | | Status |
|---|---|---|
| **Gulf Region ITS Architecture** | | |
| *Element:* **Mississippi Emergency Management Agency** | | |
| *Entity:* **Emergency Management** | | |
| *Functional Area:* **Emergency Early Warning System**<br>Monitors alerting and advisory systems, information collected by ITS surveillance and sensors, and reports from other agencies in order to identify potential, imminent, or in-progress major incidents or disasters. Notification is provided to other ITS centers to notify the traveling public. | | |
| *Requirement:* | 6 The center shall broadcast wide-area alerts and advisories to traveler information service providers for emergency situations such as severe weather events, civil emergencies, child abduction (AMBER alert system), military activities, and other situations that pose a threat to life and property. | Existing |
| *Requirement:* | 7 The center shall broadcast wide-area alerts and advisories to maintenance centers for emergency situations such as severe weather events, civil emergencies, child abduction (AMBER alert system), military activities, and other situations that pose a threat to life and property. | Existing |
| *Requirement:* | 8 The center shall broadcast wide-area alerts and advisories to other emergency management centers for emergency situations such as severe weather events, civil emergencies, child abduction (AMBER alert system), military activities, and other situations that pose a threat to life and property. | Existing |
| *Requirement:* | 9 The center shall process status information from each of the centers that have been sent the wide-area alert. | Existing |
| *Requirement:* | 10 The center shall coordinate the broadcast of wide-area alerts and advisories with other emergency management centers. | Existing |
| *Requirement:* | 11 The center shall receive incident information from other transportation management centers to support the early warning system. | Existing |
| *Requirement:* | 12 The center shall present the alert and advisory information and the status of the actions taken in response to the alert by the other centers to the emergency system operator as received from other system inputs. | Existing |
| *Requirement:* | 13 The center shall support the entry of alert and advisory information directly from the emergency system operator. | Existing |
| *Functional Area:* **Emergency Response Management**<br>Strategic emergency planning and response capabilities and broad inter-agency interfaces to support large-scale incidents and disasters, commonly associated with Emergency Operations Centers. | | |
| *Requirement:* | 1 The center shall provide strategic emergency response capabilities such as that of an Emergency Operations Center for large-scale incidents and disasters. | Existing |
| *Requirement:* | 2 The center shall manage coordinated inter-agency responses to and recovery from large-scale emergencies. Such agencies include traffic management, transit, maintenance and construction management, rail operations, and other emergency management agencies. | Existing |
| *Requirement:* | 3 The center shall provide the capability to implement response plans and track progress through the incident by exchanging incident information and distributing response status to allied agencies. | Existing |

| Architecture | | | Status |
|---|---|---|---|
| **Gulf Region ITS Architecture** | | | |
| *Element:* **Mississippi Emergency Management Agency** | | | |
| *Entity:* **Emergency Management** | | | |
| *Functional Area:* | **Emergency Response Management**<br>Strategic emergency planning and response capabilities and broad inter-agency interfaces to support large-scale incidents and disasters, commonly associated with Emergency Operations Centers. | | |
| *Requirement:* | 4 | The center shall develop, coordinate with other agencies, and store emergency response plans. | Existing |
| *Requirement:* | 5 | The center shall track the availability of resources (including vehicles, roadway cleanup, etc.), request additional resources from traffic, maintenance, or other emergency centers if needed. | Existing |
| *Requirement:* | 6 | The center shall allocate the appropriate emergency services, resources, and vehicle (s) to respond to incidents, and shall provide the capability to override the current allocation to suit the special needs of a current incident. | Existing |
| *Requirement:* | 10 | The center shall provide the capability to request transit resource availability from transit centers for use during disaster and evacuation operations. | Existing |
| *Requirement:* | 11 | The center shall assimilate the status of the transit, traffic, rail, maintenance, and other emergency center services and systems to create an overall transportation system status, and disseminate to each of these centers and the traveling public via traveler information providers. | Existing |
| *Requirement:* | 12 | The center shall provide information to the media concerning the status of an emergency response. | Existing |
| *Requirement:* | 13 | The center shall provide the capability for digitized map data to act as the background to the information presented to the emergency system operator. | Existing |
| *Requirement:* | 14 | The center shall provide the capability for center personnel to provide inputs to the management of incidents, disasters and evacuations. | Existing |
| *Functional Area:* | **Emergency Evacuation Support**<br>Evacuation planning and coordination to manage evacuation and reentry of a population in the vicinity of a disaster or other emergency that poses a risk to public safety. | | |
| *Requirement:* | 1 | The center shall manage inter-agency coordination of evacuation operations, from initial planning through the evacuation process and reentry. | Existing |
| *Requirement:* | 2 | The center shall develop and exchange evacuation plans with allied agencies prior to the occurrence of a disaster. | Existing |
| *Requirement:* | 3 | The center shall provide an interface to the emergency system operator to enter evacuation plans and procedures and present the operator with other agencies' plans. | Existing |
| *Requirement:* | 4 | The center shall coordinate evacuation destinations and shelter needs with shelter providers (e.g., the American Red Cross) in the region. | Existing |
| *Requirement:* | 5 | The center shall provide evacuation information to traffic, transit, maintenance and construction, rail operations, and other emergency management centers as needed. | Existing |

| Architecture | | Status |
|---|---|---|
| **Gulf Region ITS Architecture** | | |
| *Element:* **Mississippi Emergency Management Agency** | | |
| *Entity:* **Emergency Management** | | |
| *Functional Area:* | **Emergency Evacuation Support**<br>Evacuation planning and coordination to manage evacuation and reentry of a population in the vicinity of a disaster or other emergency that poses a risk to public safety. | |
| *Requirement:* | 6 The center shall request resources from transit agencies as needed to support the evacuation. | Existing |
| *Requirement:* | 7 The center shall request traffic management agencies to implement special traffic control strategies and to control evacuation traffic, including traffic on local streets and arterials as well as the major evacuation routes. | Existing |
| *Requirement:* | 8 The center shall provide traveler information systems with evacuation guidance including basic information to assist potential evacuees in determining whether evacuation is necessary and when it is safe to return. | Existing |
| *Requirement:* | 9 The center shall monitor the progress or status of the evacuation once it begins and exchange tactical plans, prepared during the incident, with allied agencies. | Existing |
| *Requirement:* | 10 The center shall monitor the progress of the reentry process. | Existing |
| *Entity:* **Information Service Provider** | | |
| *Functional Area:* | **ISP Emergency Traveler Information**<br>Collection and distribution of emergency information to the traveler public, including evacuation information and wide-area alerts. | |
| *Requirement:* | 1 The center shall collect and provide to the traveler interface systems emergency evacuation information, including evacuation zones, shelter information, available transportation modes, road closures and detours, changes to transit services, and traffic and road conditions at the origin, destination, and along the evacuation routes. | Existing |
| *Requirement:* | 2 The center shall provide evacuation information to shelter providers. | Existing |
| *Requirement:* | 3 The center shall collect and provide wide-area alert information to the traveler interface system with region-specific data, including major emergencies such as a natural or man-made disaster, civil emergency, child abductions, severe weather watches and warnings, military activities, and law enforcement warnings. | Existing |
| *Requirement:* | 4 The center shall provide the capability for a system operator to control the type and update frequency of emergency and wide-area alert information distributed to travelers. | Existing |
| *Element:* **Mississippi Office of Homeland Security** | | |
| *Entity:* **Emergency Management** | | |
| *Functional Area:* | **Emergency Early Warning System**<br>Monitors alerting and advisory systems, information collected by ITS surveillance and sensors, and reports from other agencies in order to identify potential, imminent, or in-progress major incidents or disasters. Notification is provided to other ITS centers to notify the traveling public. | |

| Architecture | | Status |
|---|---|---|
| **Gulf Region ITS Architecture** | | |
| *Element:* **Mississippi Office of Homeland Security** | | |
| *Entity:* **Emergency Management** | | |
| *Functional Area:* | **Emergency Early Warning System**<br>Monitors alerting and advisory systems, information collected by ITS surveillance and sensors, and reports from other agencies in order to identify potential, imminent, or in-progress major incidents or disasters. Notification is provided to other ITS centers to notify the traveling public. | |
| *Requirement:* | 1 The center shall monitor information from Alerting and Advisory Systems such as the Information Sharing and Analysis Centers (ISACs), the National Infrastructure Protection Center (NIPC), the Homeland Security Advisory System (HSAS), etc. The information may include assessments (general incident and vulnerability awareness information), advisories (identification of threats or recommendations to increase preparedness levels), or alerts (information on imminent or in-progress emergencies). | Existing |
| *Requirement:* | 2 The center shall provide the capability to correlate alerts and advisories, incident information, and security sensor and surveillance data. | Existing |
| *Requirement:* | 8 The center shall broadcast wide-area alerts and advisories to other emergency management centers for emergency situations such as severe weather events, civil emergencies, child abduction (AMBER alert system), military activities, and other situations that pose a threat to life and property. | Existing |
| *Requirement:* | 9 The center shall process status information from each of the centers that have been sent the wide-area alert. | Existing |
| *Requirement:* | 10 The center shall coordinate the broadcast of wide-area alerts and advisories with other emergency management centers. | Existing |
| *Requirement:* | 11 The center shall receive incident information from other transportation management centers to support the early warning system. | Existing |
| *Requirement:* | 12 The center shall present the alert and advisory information and the status of the actions taken in response to the alert by the other centers to the emergency system operator as received from other system inputs. | Existing |
| *Requirement:* | 13 The center shall support the entry of alert and advisory information directly from the emergency system operator. | Existing |
| *Functional Area:* | **Emergency Response Management**<br>Strategic emergency planning and response capabilities and broad inter-agency interfaces to support large-scale incidents and disasters, commonly associated with Emergency Operations Centers. | |
| *Requirement:* | 1 The center shall provide strategic emergency response capabilities such as that of an Emergency Operations Center for large-scale incidents and disasters. | Existing |
| *Requirement:* | 2 The center shall manage coordinated inter-agency responses to and recovery from large-scale emergencies. Such agencies include traffic management, transit, maintenance and construction management, rail operations, and other emergency management agencies. | Existing |

| Architecture | | Status |
|---|---|---|
| **Gulf Region ITS Architecture** | | |
| *Element:* **Mississippi Office of Homeland Security** | | |
| *Entity:* **Emergency Management** | | |
| *Functional Area:* **Emergency Response Management**<br>Strategic emergency planning and response capabilities and broad inter-agency interfaces to support large-scale incidents and disasters, commonly associated with Emergency Operations Centers. | | |
| *Requirement:* | 3 The center shall provide the capability to implement response plans and track progress through the incident by exchanging incident information and distributing response status to allied agencies. | Existing |
| *Requirement:* | 4 The center shall develop, coordinate with other agencies, and store emergency response plans. | Existing |
| *Requirement:* | 5 The center shall track the availability of resources (including vehicles, roadway cleanup, etc.), request additional resources from traffic, maintenance, or other emergency centers if needed. | Existing |
| *Requirement:* | 6 The center shall allocate the appropriate emergency services, resources, and vehicle (s) to respond to incidents, and shall provide the capability to override the current allocation to suit the special needs of a current incident. | Existing |
| *Requirement:* | 10 The center shall provide the capability to request transit resource availability from transit centers for use during disaster and evacuation operations. | Existing |
| *Requirement:* | 11 The center shall assimilate the status of the transit, traffic, rail, maintenance, and other emergency center services and systems to create an overall transportation system status, and disseminate to each of these centers and the traveling public via traveler information providers. | Existing |
| *Requirement:* | 12 The center shall provide information to the media concerning the status of an emergency response. | Existing |
| *Requirement:* | 13 The center shall provide the capability for digitized map data to act as the background to the information presented to the emergency system operator. | Existing |
| *Requirement:* | 14 The center shall provide the capability for center personnel to provide inputs to the management of incidents, disasters and evacuations. | Existing |
| *Functional Area:* **Emergency Evacuation Support**<br>Evacuation planning and coordination to manage evacuation and reentry of a population in the vicinity of a disaster or other emergency that poses a risk to public safety. | | |
| *Requirement:* | 1 The center shall manage inter-agency coordination of evacuation operations, from initial planning through the evacuation process and reentry. | Existing |
| *Requirement:* | 2 The center shall develop and exchange evacuation plans with allied agencies prior to the occurrence of a disaster. | Existing |
| *Requirement:* | 3 The center shall provide an interface to the emergency system operator to enter evacuation plans and procedures and present the operator with other agencies' plans. | Existing |
| *Requirement:* | 4 The center shall coordinate evacuation destinations and shelter needs with shelter providers (e.g., the American Red Cross) in the region. | Existing |

| Architecture | | Status |
|---|---|---|
| **Gulf Region ITS Architecture** | | |
| *Element:* **Mississippi Office of Homeland Security** | | |
| *Entity:* **Emergency Management** | | |
| *Functional Area:* | **Emergency Evacuation Support**<br>Evacuation planning and coordination to manage evacuation and reentry of a population in the vicinity of a disaster or other emergency that poses a risk to public safety. | |
| *Requirement:* | 5 The center shall provide evacuation information to traffic, transit, maintenance and construction, rail operations, and other emergency management centers as needed. | Existing |
| *Requirement:* | 6 The center shall request resources from transit agencies as needed to support the evacuation. | Existing |
| *Requirement:* | 7 The center shall request traffic management agencies to implement special traffic control strategies and to control evacuation traffic, including traffic on local streets and arterials as well as the major evacuation routes. | Existing |
| *Requirement:* | 8 The center shall provide traveler information systems with evacuation guidance including basic information to assist potential evacuees in determining whether evacuation is necessary and when it is safe to return. | Existing |
| *Requirement:* | 9 The center shall monitor the progress or status of the evacuation once it begins and exchange tactical plans, prepared during the incident, with allied agencies. | Existing |
| *Requirement:* | 10 The center shall monitor the progress of the reentry process. | Existing |
| *Entity:* **Information Service Provider** | | |
| *Functional Area:* | **ISP Emergency Traveler Information**<br>Collection and distribution of emergency information to the traveler public, including evacuation information and wide-area alerts. | |
| *Requirement:* | 3 The center shall collect and provide wide-area alert information to the traveler interface system with region-specific data, including major emergencies such as a natural or man-made disaster, civil emergency, child abductions, severe weather watches and warnings, military activities, and law enforcement warnings. | Existing |
| *Requirement:* | 4 The center shall provide the capability for a system operator to control the type and update frequency of emergency and wide-area alert information distributed to travelers. | Existing |
| *Element:* **Mississippi Public Service Commission SAFETYNET** | | |
| *Entity:* **Archived Data Management Subsystem** | | |
| *Functional Area:* | **ITS Data Repository**<br>Collect and maintain data and data catalogs from one or more data sources. May include quality checks, error notification, and archive coordination. | |
| *Requirement:* | 1 The center shall collect data to be archived from one or more data sources. | Existing |
| *Requirement:* | 2 The center shall collect data catalogs from one or more data sources. A catalog describes the data contained in the collection of archived data and may include descriptions of the schema or structure of the data, a description of the contents of the data; e.g., time range of entries, number of entries; or a sample of the data (e. g. a thumbnail). | Existing |

| Architecture | | | Status |
|---|---|---|---|
| **Gulf Region ITS Architecture** | | | |
| *Element:* **Mississippi Public Service Commission SAFETYNET** | | | |
| *Entity:* **Archived Data Management Subsystem** | | | |
| *Functional Area:* | **ITS Data Repository**<br>Collect and maintain data and data catalogs from one or more data sources. May include quality checks, error notification, and archive coordination. | | |
| *Requirement:* | 3 | The center shall store the archived data in a focused repository that is suited to a particular set of ITS data users. | Existing |
| *Requirement:* | 4 | The center shall include capabilities for performing quality checks on the incoming archived data. | Existing |
| *Requirement:* | 5 | The center shall include capabilities for error notification on the incoming archived data. | Existing |
| *Requirement:* | 6 | The center shall include capabilities for archive to archive coordination. | Existing |
| *Requirement:* | 7 | The center shall support a broad range of archived data management implementations, ranging from simple data marts that collect a focused set of data and serve a particular user community to large-scale data warehouses that collect, integrate, and summarize transportation data from multiple sources and serve a broad array of users within a region. | Existing |
| *Requirement:* | 8 | The center shall perform quality checks on received data. | Existing |
| *Requirement:* | 9 | The center shall provide the capability to execute methods on the incoming data such as cleansing, summarizations, aggregations, or transformations applied to the data before it is stored in the archive. | Existing |
| *Requirement:* | 10 | The center shall respond to requests from the administrator interface function to maintain the archive data. | Existing |
| *Requirement:* | 11 | When data or a catalog of data is received from the archive, the center shall generate the requested data product for the users systems. | Existing |
| *Requirement:* | 12 | For archive data requiring financial payment, the center shall process the financial requests and manage an interface to a Financial Institution. | Existing |
| *Functional Area:* | **Government Reporting Systems Support**<br>Selects and formats data residing in an ITS archive to facilitate local, state, and federal government data reporting requirements. | | |
| *Requirement:* | 1 | The center shall provide data from an ITS archive to federal, state, or local government reporting systems. | Existing |
| *Requirement:* | 2 | The center shall provide the capability to select data from an ITS archive for use in government reports. | Existing |
| *Requirement:* | 3 | The center shall provide the capability to format data from an ITS archive suitable for input into government reports. | Existing |
| *Requirement:* | 4 | The center shall support requests for ITS archived data from Government Reporting Systems. | Existing |
| *Requirement:* | 5 | The center shall provide the applicable meta-data for any ITS archived data to satisfy government reporting system requests. Meta-data may include attributes that describe the source and quality of the data and the conditions surrounding the collection of the data. | Existing |

| Architecture | | Status |
|---|---|---|
| **Gulf Region ITS Architecture** | | |
| *Element:* **Mississippi Public Service Commission SAFETYNET** | | |
| *Entity:* **Commercial Vehicle Administration** | | |
| *Functional Area:* **Credentials and Taxes Administration**<br>Manage electronic filing of credentials and tax filing for commercial vehicle operators. Provides commercial vehicle (including HAZMAT) route restrictions. | | |
| *Requirement:* | 1 The center shall manage electronic credentials filing and processing for commercial vehicles. | Existing |
| *Requirement:* | 2 The center shall manage the filing of appropriate taxes for the operation of commercial vehicles. | Existing |
| *Requirement:* | 3 The center shall process requests for payments of electronic credentials and tax filing and maintain an interface to a Financial Institution. | Existing |
| *Requirement:* | 4 The center shall exchange credentials and tax information with other commercial vehicle administration centers - either in other states or the federal government. | Existing |
| *Requirement:* | 7 The center shall provide an interface with commercial vehicle fleet and freight management centers to exchange audit and compliance review reports. | Existing |
| *Functional Area:* **CV Information Exchange**<br>Exchange information concerning safety, credentialing, and operations of commercial vehicles between the center and the roadside check stations, across jurisdictions, with fleet operators, enforcement agencies, and other information requestors. | | |
| *Requirement:* | 2 The center shall exchange safety and credentials data among other commercial vehicle administration centers; includes border clearance status, credentials information, credentials status information, and safety status information. | Existing |
| *Requirement:* | 3 The center shall package data concerning commercial vehicle safety and credentials into snapshots (top-level summary and critical status information). | Existing |
| *Requirement:* | 4 The center shall package data concerning commercial vehicle safety and credentials into profiles (detailed and historical data). | Existing |
| *Requirement:* | 6 The center shall provide commercial vehicle credentials and safety status information to authorized requestors such as insurance agencies. | Existing |
| *Requirement:* | 7 The center shall provide reports to the commercial vehicle fleet manager regarding fleet activity through roadside facilities including accident reports, citations, credentials status information, and safety status information. | Existing |
| *Functional Area:* **CV Data Collection**<br>Collects and stores information related to Commercial Vehicle Operations. For use by operations personnel or data archives in the region. | | |
| *Requirement:* | 1 The center shall receive operational data from the roadside check systems as well as administration and credentials data. | Existing |
| *Requirement:* | 2 The center shall assign quality control metrics and meta-data to be stored along with the data. Meta-data may include attributes that describe the source and quality of the data and the conditions surrounding the collection of the data. | Existing |

| Architecture | | Status |
|---|---|---|
| **Gulf Region ITS Architecture** | | |
| *Element:* **Mississippi Public Service Commission SAFETYNET** | | |
| *Entity:* **Commercial Vehicle Administration** | | |
| *Functional Area:* **CV Data Collection** Collects and stores information related to Commercial Vehicle Operations. For use by operations personnel or data archives in the region. | | |
| *Requirement:* | 3 The center shall receive and respond to requests from ITS Archives for either a catalog of the commercial vehicle operations data or for the data itself. | Existing |
| *Requirement:* | 4 The center shall be able to produce sample products of the data available. | Existing |
| *Element:* **Mississippi Road/Weather Conditions Website** | | |
| *Entity:* **Information Service Provider** | | |
| *Functional Area:* **ISP Traveler Data Collection** Collects traveler information from other centers, consolidates and refines the collected data, and makes this data available to traveler information applications. | | |
| *Requirement:* | 1 The center shall collect, process, and store traffic and highway condition information, including incident information, detours and road closures, event information, recommended routes, and current speeds on specific routes. | Existing |
| *Requirement:* | 6 The center shall collect, process, and store weather information. | Existing |
| *Functional Area:* **Basic Information Broadcast** Collection, processing, storage, and broadcast dissemination of traffic, transit, maintenance and construction, event, and weather information to traveler interface systems and vehicles. | | |
| *Requirement:* | 1 The center shall collect, process, store, and disseminate traffic and highway condition information to travelers, including incident information, detours and road closures, event information, recommended routes, and current speeds on specific routes. | Existing |
| *Requirement:* | 6 The center shall collect, process, store, and disseminate weather information to travelers. | Existing |
| *Requirement:* | 10 The center shall provide the capability for a system operator to control the type and update frequency of broadcast traveler information. | Existing |
| *Functional Area:* **ISP Emergency Traveler Information** Collection and distribution of emergency information to the traveler public, including evacuation information and wide-area alerts. | | |
| *Requirement:* | 3 The center shall collect and provide wide-area alert information to the traveler interface system with region-specific data, including major emergencies such as a natural or man-made disaster, civil emergency, child abductions, severe weather watches and warnings, military activities, and law enforcement warnings. | Existing |
| *Requirement:* | 4 The center shall provide the capability for a system operator to control the type and update frequency of emergency and wide-area alert information distributed to travelers. | Existing |
| *Element:* **Mississippi State Tax Commission Commercial Vehicle Databases** | | |
| *Entity:* **Archived Data Management Subsystem** | | |

| Architecture | | Status |
|---|---|---|
| **Gulf Region ITS Architecture** | | |
| *Element:* **Mississippi State Tax Commission Commercial Vehicle Databases** | | |
| *Entity:* **Archived Data Management Subsystem** | | |
| *Functional Area:* **ITS Data Repository** Collect and maintain data and data catalogs from one or more data sources. May include quality checks, error notification, and archive coordination. | | |
| *Requirement:* | 1 The center shall collect data to be archived from one or more data sources. | Existing |
| *Requirement:* | 2 The center shall collect data catalogs from one or more data sources. A catalog describes the data contained in the collection of archived data and may include descriptions of the schema or structure of the data, a description of the contents of the data; e.g., time range of entries, number of entries; or a sample of the data (e. g. a thumbnail). | Existing |
| *Requirement:* | 3 The center shall store the archived data in a focused repository that is suited to a particular set of ITS data users. | Existing |
| *Requirement:* | 4 The center shall include capabilities for performing quality checks on the incoming archived data. | Existing |
| *Requirement:* | 5 The center shall include capabilities for error notification on the incoming archived data. | Existing |
| *Requirement:* | 6 The center shall include capabilities for archive to archive coordination. | Existing |
| *Requirement:* | 7 The center shall support a broad range of archived data management implementations, ranging from simple data marts that collect a focused set of data and serve a particular user community to large-scale data warehouses that collect, integrate, and summarize transportation data from multiple sources and serve a broad array of users within a region. | Existing |
| *Requirement:* | 8 The center shall perform quality checks on received data. | Existing |
| *Requirement:* | 9 The center shall provide the capability to execute methods on the incoming data such as cleansing, summarizations, aggregations, or transformations applied to the data before it is stored in the archive. | Existing |
| *Requirement:* | 10 The center shall respond to requests from the administrator interface function to maintain the archive data. | Existing |
| *Requirement:* | 11 When data or a catalog of data is received from the archive, the center shall generate the requested data product for the users systems. | Existing |
| *Requirement:* | 12 For archive data requiring financial payment, the center shall process the financial requests and manage an interface to a Financial Institution. | Existing |
| *Entity:* **Commercial Vehicle Administration** | | |
| *Functional Area:* **Credentials and Taxes Administration** Manage electronic filing of credentials and tax filing for commercial vehicle operators. Provides commercial vehicle (including HAZMAT) route restrictions. | | |
| *Requirement:* | 1 The center shall manage electronic credentials filing and processing for commercial vehicles. | Existing |
| *Requirement:* | 2 The center shall manage the filing of appropriate taxes for the operation of commercial vehicles. | Existing |

| Architecture | | Status |
|---|---|---|
| **Gulf Region ITS Architecture** | | |
| *Element:* **Mississippi State Tax Commission Commercial Vehicle Databases** | | |
| *Entity:* **Commercial Vehicle Administration** | | |
| *Functional Area:* **Credentials and Taxes Administration** Manage electronic filing of credentials and tax filing for commercial vehicle operators. Provides commercial vehicle (including HAZMAT) route restrictions. | | |
| *Requirement:* | 3 The center shall process requests for payments of electronic credentials and tax filing and maintain an interface to a Financial Institution. | Existing |
| *Requirement:* | 4 The center shall exchange credentials and tax information with other commercial vehicle administration centers - either in other states or the federal government. | Existing |
| *Requirement:* | 7 The center shall provide an interface with commercial vehicle fleet and freight management centers to exchange audit and compliance review reports. | Existing |
| *Requirement:* | 8 The center shall provide credentials information about commercial vehicle operators and carriers to authorized requestors such as insurance agencies. | Existing |
| *Requirement:* | 9 The center shall receive and store information on commercial vehicle violations from enforcement agencies as part of the processing of credentials applications. | Existing |
| *Functional Area:* **CV Information Exchange** Exchange information concerning safety, credentialing, and operations of commercial vehicles between the center and the roadside check stations, across jurisdictions, with fleet operators, enforcement agencies, and other information requestors. | | |
| *Requirement:* | 1 The center shall exchange information with roadside check facilities, including credentials and credentials status information, safety status information, daily site activity data, and citations. | Existing |
| *Requirement:* | 2 The center shall exchange safety and credentials data among other commercial vehicle administration centers; includes border clearance status, credentials information, credentials status information, and safety status information. | Existing |
| *Requirement:* | 3 The center shall package data concerning commercial vehicle safety and credentials into snapshots (top-level summary and critical status information). | Existing |
| *Requirement:* | 4 The center shall package data concerning commercial vehicle safety and credentials into profiles (detailed and historical data). | Existing |
| *Requirement:* | 6 The center shall provide commercial vehicle credentials and safety status information to authorized requestors such as insurance agencies. | Existing |
| *Functional Area:* **CV Data Collection** Collects and stores information related to Commercial Vehicle Operations. For use by operations personnel or data archives in the region. | | |
| *Requirement:* | 1 The center shall receive operational data from the roadside check systems as well as administration and credentials data. | Existing |
| *Requirement:* | 2 The center shall assign quality control metrics and meta-data to be stored along with the data. Meta-data may include attributes that describe the source and quality of the data and the conditions surrounding the collection of the data. | Existing |

| Architecture | | Status |
|---|---|---|
| **Gulf Region ITS Architecture** | | |
| *Element:* **Mississippi State Tax Commission Commercial Vehicle Databases** | | |
| *Entity:* **Commercial Vehicle Administration** | | |
| *Functional Area:* **CV Data Collection**<br>Collects and stores information related to Commercial Vehicle Operations. For use by operations personnel or data archives in the region. | | |
| *Requirement:* | 3 The center shall receive and respond to requests from ITS Archives for either a catalog of the commercial vehicle operations data or for the data itself. | Existing |
| *Requirement:* | 4 The center shall be able to produce sample products of the data available. | Existing |
| *Element:* **Port Authority Facilities** | | |
| *Entity:* **Commercial Vehicle Check** | | |
| *Functional Area:* **Roadside WIM**<br>Roadside check facility equipment to detect and measure the weight of commercial vehicles at high speed. Can include an interface to the credential or it can be a stand alone package with display. | | |
| *Requirement:* | 1 The roadside check facility equipment shall detect the presence of commercial vehicles and freight equipment approaching a facility. Sensors can differentiate between different types of vehicles and determine the number of axles, gross vehicle weight, weight per axle, and the identification of the vehicle and its cargo. | Existing |
| *Requirement:* | 2 The roadside check facility equipment shall request and input electronic screening data from the commercial vehicle's electronic tag data. | Existing |
| *Requirement:* | 3 The roadside check facility equipment shall send a pass/pull-in notification to the commercial vehicle and its driver based on the information received from the vehicle and the measurements taken. The message may be sent to the on-board equipment in the commercial vehicle or transmitted to the driver using equipment such as dynamic message signs, red-green lights, flashing signs, etc. | Existing |
| *Element:* **Port Authority Freight Data Systems** | | |
| *Entity:* **Archived Data Management Subsystem** | | |
| *Functional Area:* **ITS Data Repository**<br>Collect and maintain data and data catalogs from one or more data sources. May include quality checks, error notification, and archive coordination. | | |
| *Requirement:* | 1 The center shall collect data to be archived from one or more data sources. | Existing |
| *Requirement:* | 2 The center shall collect data catalogs from one or more data sources. A catalog describes the data contained in the collection of archived data and may include descriptions of the schema or structure of the data, a description of the contents of the data; e.g., time range of entries, number of entries; or a sample of the data (e. g. a thumbnail). | Existing |
| *Requirement:* | 3 The center shall store the archived data in a focused repository that is suited to a particular set of ITS data users. | Existing |
| *Requirement:* | 4 The center shall include capabilities for performing quality checks on the incoming archived data. | Existing |

| Architecture | | Status |
|---|---|---|
| **Gulf Region ITS Architecture** | | |
| *Element:* **Port Authority Freight Data Systems** | | |
| *Entity:* **Archived Data Management Subsystem** | | |
| *Functional Area:* **ITS Data Repository** Collect and maintain data and data catalogs from one or more data sources. May include quality checks, error notification, and archive coordination. | | |
| *Requirement:* | 5 The center shall include capabilities for error notification on the incoming archived data. | Existing |
| *Requirement:* | 6 The center shall include capabilities for archive to archive coordination. | Existing |
| *Requirement:* | 7 The center shall support a broad range of archived data management implementations, ranging from simple data marts that collect a focused set of data and serve a particular user community to large-scale data warehouses that collect, integrate, and summarize transportation data from multiple sources and serve a broad array of users within a region. | Existing |
| *Requirement:* | 8 The center shall perform quality checks on received data. | Existing |
| *Requirement:* | 9 The center shall provide the capability to execute methods on the incoming data such as cleansing, summarizations, aggregations, or transformations applied to the data before it is stored in the archive. | Existing |
| *Requirement:* | 10 The center shall respond to requests from the administrator interface function to maintain the archive data. | Existing |
| *Requirement:* | 11 When data or a catalog of data is received from the archive, the center shall generate the requested data product for the users systems. | Existing |
| *Requirement:* | 12 For archive data requiring financial payment, the center shall process the financial requests and manage an interface to a Financial Institution. | Existing |
| *Functional Area:* **Government Reporting Systems Support** Selects and formats data residing in an ITS archive to facilitate local, state, and federal government data reporting requirements. | | |
| *Requirement:* | 1 The center shall provide data from an ITS archive to federal, state, or local government reporting systems. | Existing |
| *Requirement:* | 2 The center shall provide the capability to select data from an ITS archive for use in government reports. | Existing |
| *Requirement:* | 3 The center shall provide the capability to format data from an ITS archive suitable for input into government reports. | Existing |
| *Requirement:* | 4 The center shall support requests for ITS archived data from Government Reporting Systems. | Existing |
| *Requirement:* | 5 The center shall provide the applicable meta-data for any ITS archived data to satisfy government reporting system requests. Meta-data may include attributes that describe the source and quality of the data and the conditions surrounding the collection of the data. | Existing |
| *Element:* **Private Trucking Companies** | | |
| *Entity:* **Fleet and Freight Management** | | |
| *Functional Area:* **Fleet Administration** | | |

| Architecture | | Status |
|---|---|---|
| **Gulf Region ITS Architecture** | | |
| *Element:* **Private Trucking Companies** | | |
| *Entity:* **Fleet and Freight Management** | | |
| *Functional Area:* | **Fleet Administration**<br>Commercial vehicle fleet tracking, dispatch, and reporting - includes interfaces to state/federal commercial vehicle administration, toll administration, emergency management, map update providers, and traveler information service providers. | |
| *Requirement:* | 1 The center shall send data concerning enrollment of commercial vehicles for electronic clearance and tax filing to the appropriate commercial vehicle administration center. The data may include driver and vehicle identification, safety inspections/status, carrier credentials, related citations, and accident information. | Existing |
| *Requirement:* | 2 The center shall obtain and manage commercial vehicle routes for its fleet of vehicles, taking into account route restrictions, advance payment of tolls, HAZMAT restrictions, and current traffic and road conditions provided by traveler information systems. | Existing |
| *Requirement:* | 4 The center shall monitor the locations and progress of commercial vehicles against their planned routes and raise appropriate warnings based on route monitoring parameters. | Existing |
| *Requirement:* | 5 The center shall coordinate the response to security incidents and the sharing of security threat information involving commercial vehicles with other agencies including emergency management centers and alerting/advisory systems. | Existing |
| *Functional Area:* | **Fleet Credentials and Taxes Management and Reporting**<br>Commercial vehicle fleet support systems for the purchase and filing of electronic credentials, status reporting, tax audit data, and compliance reviews. Electronic interfaces with the appropriate state or federal commercial vehicle administration centers. | |
| *Requirement:* | 1 The center shall send data concerning enrollment and purchase of commercial vehicles credentials and tax filing to the appropriate commercial vehicle administration center. | Existing |
| *Requirement:* | 2 The center shall receive compliance review reports from the appropriate commercial vehicle administration centers concerning the operations of the commercial vehicle fleet, including concomitant out-of-service notifications, and carrier warnings/notifications. | Existing |
| *Requirement:* | 3 The center shall provide audit data to the appropriate commercial vehicle administration center to support tax audits. | Existing |
| *Requirement:* | 4 The center shall support an interface with a commercial vehicle driver that is acting in the role of a commercial vehicle fleet manager for the purposes of obtaining credentials, filing taxes and audit data, and receiving compliance reports and status information. | Existing |
| *Functional Area:* | **Fleet HAZMAT Management**<br>Notification of hazardous materials (HAZMAT) shipments to emergency management centers for commercial vehicles managed by the center - includes information on the nature of the cargo, the vehicle, and its expected route. | |

| Architecture | | Status |
|---|---|---|
| **Gulf Region ITS Architecture** | | |
| *Element:* **Private Trucking Companies** | | |
| *Entity:* **Fleet and Freight Management** | | |
| *Functional Area:* | **Fleet HAZMAT Management**<br>Notification of hazardous materials (HAZMAT) shipments to emergency management centers for commercial vehicles managed by the center - includes information on the nature of the cargo, the vehicle, and its expected route. | |
| *Requirement:* | 1 The center shall track the routing and cargo information, including the manifest data plus the chemical characteristics of a hazardous materials (HAZMAT) load being carried by its fleet of commercial vehicles. | Planned |
| *Requirement:* | 2 The center shall provide information concerning commercial vehicles carrying hazardous materials (HAZMAT) upon request from an emergency management center. The information includes the nature of the cargo being carried, identity of the vehicle and unloading instructions. | Planned |
| *Element:* **Private Trucking Companies Commercial Vehicles** | | |
| *Entity:* **Commercial Vehicle Subsystem** | | |
| *Functional Area:* | **On-board CV Electronic Data**<br>On-board systems exchanging information between the vehicle and the roadside facility with the information such as status of driver, vehicle, carrier IDs and cargo information identified via an electronic tag. | |
| *Requirement:* | 1 The commercial vehicle shall receive pass/pull-in messages from the roadside check facilities and present them to the driver in either audible or visual forms. | Existing |
| *Requirement:* | 2 The commercial vehicle shall respond to requests to provide data accumulated on-board the vehicle to roadside check facilities for inspection including driver logs, electronic identifiers, credentials, border clearance data, and other screening data such as cargo status, hazmat identifiers, out of service status, vehicle axle weight, vehicle weight, and time. | Existing |
| *Requirement:* | 3 The commercial vehicle shall respond to requests to provide the identity, status and other information from the electronic cargo lock tag, if so equipped, to roadside check facilities, including border crossings. | Existing |
| *Requirement:* | 4 The commercial vehicle shall support an interface to a commercial vehicle driver that is also acting in the role of a commercial vehicle fleet manager to set up routes, pay necessary taxes, obtain proper credentials, and write the identifiers to the electronic tag for the driver, vehicle, and carrier. | Existing |
| *Element:* **Smart Parking Systems** | | |
| *Entity:* **Parking Management** | | |
| *Functional Area:* | **Parking Management**<br>Monitor vehicles and current parking availability within parking facilities. Use driver information systems (e.g., DMS) to provide parking availability and other parking facility information to drivers. Support local traffic control coordination around the parking facility. | |

| Architecture | | Status |
|---|---|---|
| **Gulf Region ITS Architecture** | | |
| *Element:* **Smart Parking Systems** | | |
| *Entity:* **Parking Management** | | |
| *Functional Area:* **Parking Management** Monitor vehicles and current parking availability within parking facilities. Use driver information systems (e.g., DMS) to provide parking availability and other parking facility information to drivers. Support local traffic control coordination around the parking facility. | | |
| *Requirement:* | 1 The parking element shall maintain parking lot information including static information such as hours of operation, rates, location, entrance locations, capacity, type, and constraints; as well as dynamic information such as current state of the lot, occupancy, arrival rates, and departure rates. | Planned |
| *Requirement:* | 2 The parking element shall share information with a traffic management center to identify queues at entrances, exits that should be used, and other information that supports coordinated local traffic control in and around the parking facility. | Planned |
| *Requirement:* | 3 The parking element shall manage local dynamic message signs that display messages to travelers such as the parking lot state, number of spaces available, location of entrances, and current charges. | Planned |
| *Requirement:* | 4 The parking element shall provide the capability to detect, count, and classify vehicles at entrances, exits, and designated locations within a parking facility. | Planned |
| *Element:* **User Personal Computing Devices** | | |
| *Entity:* **Personal Information Access** | | |
| *Functional Area:* **Personal Basic Information Reception** Personal traveler interface that provides formatted traffic advisories, transit, event, and other traveler information, as well as broadcast alerts. Devices include personal computers and personal portable devices such as PDAs and pagers. | | |
| *Requirement:* | 1 The personal traveler interface shall receive traffic information from a center and present it to the traveler. | Existing |
| *Requirement:* | 2 The personal traveler interface shall receive transit information from a center and present it to the traveler. | Existing |
| *Requirement:* | 3 The personal traveler interface shall receive event information from a center and present it to the traveler. | Existing |
| *Requirement:* | 4 The personal traveler interface shall receive evacuation information from a center and present it to the traveler. | Existing |
| *Requirement:* | 5 The personal traveler interface shall receive wide-area alerts and present it to the traveler. | Existing |
| *Requirement:* | 6 The personal traveler interface shall provide the capability for digitized map data to act as the background to the information presented to the traveler. | Existing |
| *Requirement:* | 7 The personal traveler interface shall support traveler input in audio or manual form. | Existing |
| *Requirement:* | 8 The personal traveler interface shall present information to the traveler in audible or visual forms, consistent with a personal device. | Existing |
| *Functional Area:* **Personal Interactive Information Reception** | | |

| Architecture | | Status |
|---|---|---|
| **Gulf Region ITS Architecture** | | |
| *Element:* **User Personal Computing Devices** | | |
| *Entity:* **Personal Information Access** | | |
| *Functional Area:* | **Personal Interactive Information Reception**<br>Personal traveler interface that provides traffic, transit, yellow pages, event, and trip planning information, and other personalized traveler information services upon request. Devices include personal computers and personal portable devices such as PDAs. | |
| *Requirement:* | 1 The personal traveler interface shall receive traffic information from a center and present it to the traveler upon request. | Planned |
| *Requirement:* | 2 The personal traveler interface shall receive transit information from a center and present it to the traveler upon request. | Planned |
| *Requirement:* | 4 The personal traveler interface shall receive event information from a center and present it to the traveler upon request. | Planned |
| *Requirement:* | 5 The personal traveler interface shall receive evacuation information from a center and present it to the traveler. | Planned |
| *Requirement:* | 6 The personal traveler interface shall receive wide-area alerts and present it to the traveler. | Planned |
| *Requirement:* | 10 The personal traveler interface shall base requests from the traveler on the traveler's current location or a specific location identified by the traveler, and filter the provided information accordingly. | Planned |
| *Requirement:* | 11 The personal traveler interface shall provide digitized map data to act as the background to the information presented to the traveler. | Planned |
| *Requirement:* | 12 The personal traveler interface shall support traveler input in audio or manual form. | Planned |
| *Requirement:* | 13 The personal traveler interface shall present information to the traveler in audible or visual forms consistent with a personal device, and suitable for travelers with hearing and vision physical disabilities. | Planned |
| *Requirement:* | 14 The personal traveler interface shall be able to store frequently requested or used data, including the traveler's identity, home and work locations, etc. | Planned |

# Appendix C: Architecture Interconnect Diagrams

# Appendix C: Architecture Interconnect Diagrams

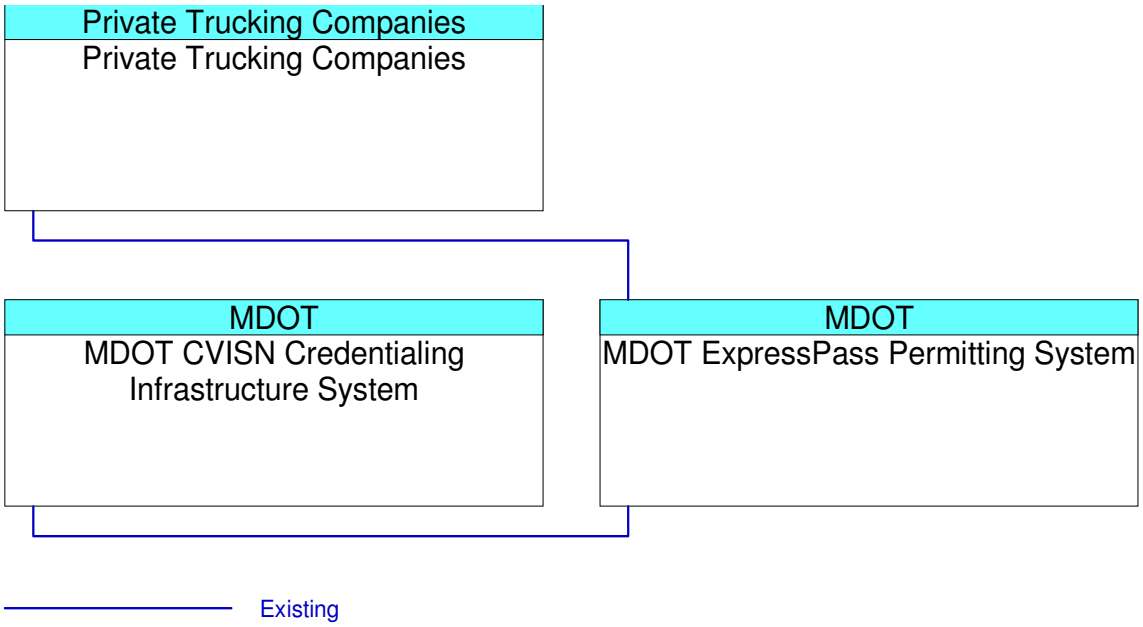
Private Trucking Companies
Private Trucking Companies
MDOT
MDOT CVISN Credentialing Infrastructure System
MDOT
MDOT ExpressPass Permitting System
Existing

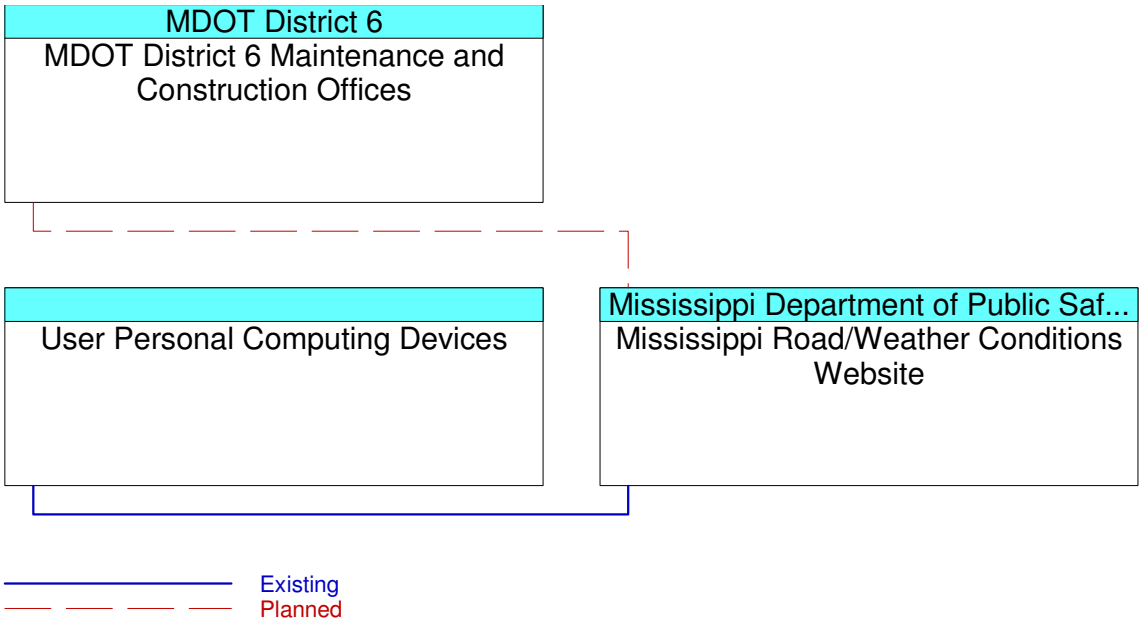
MDOT District 6
MDOT District 6 Maintenance and Construction Offices
User Personal Computing Devices
Mississippi Department of Public Saf...
Mississippi Road/Weather Conditions Website
Existing
Planned

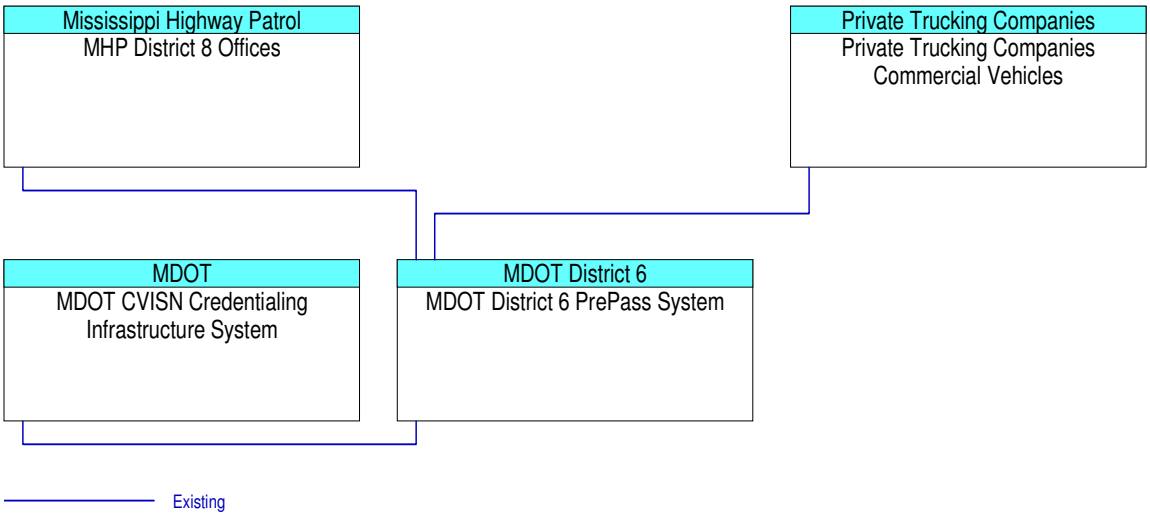
Mississippi Highway Patrol
MHP District 8 Offices
Private Trucking Companies
Private Trucking Companies
Commercial Vehicles
MDOT
MDOT CVISN Credentialing
Infrastructure System
MDOT District 6
MDOT District 6 PrePass System
Existing

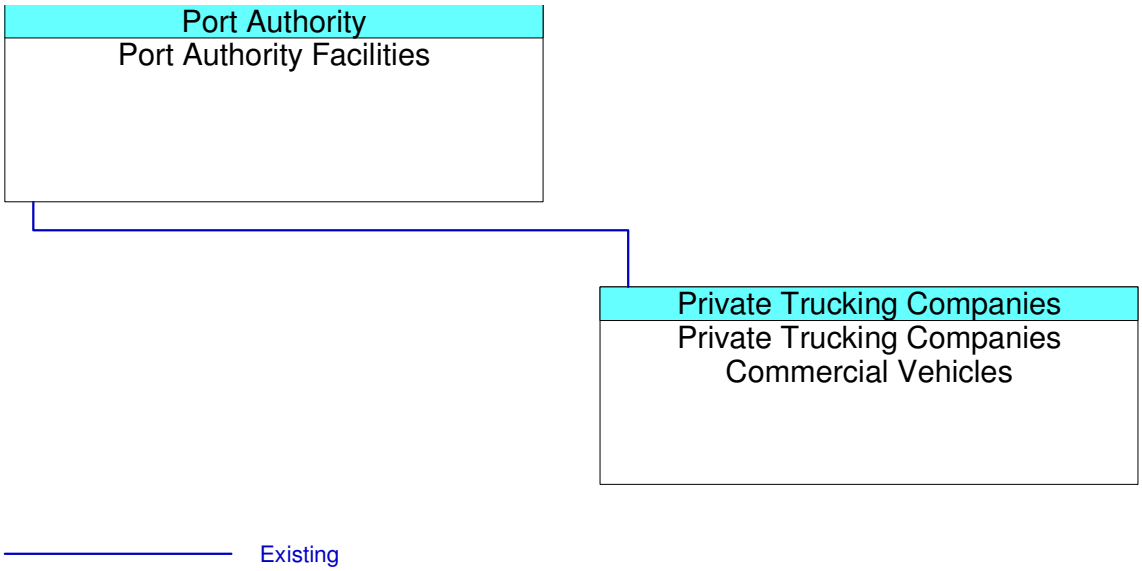
Port Authority
Port Authority Facilities
Private Trucking Companies
Private Trucking Companies
Commercial Vehicles
Existing

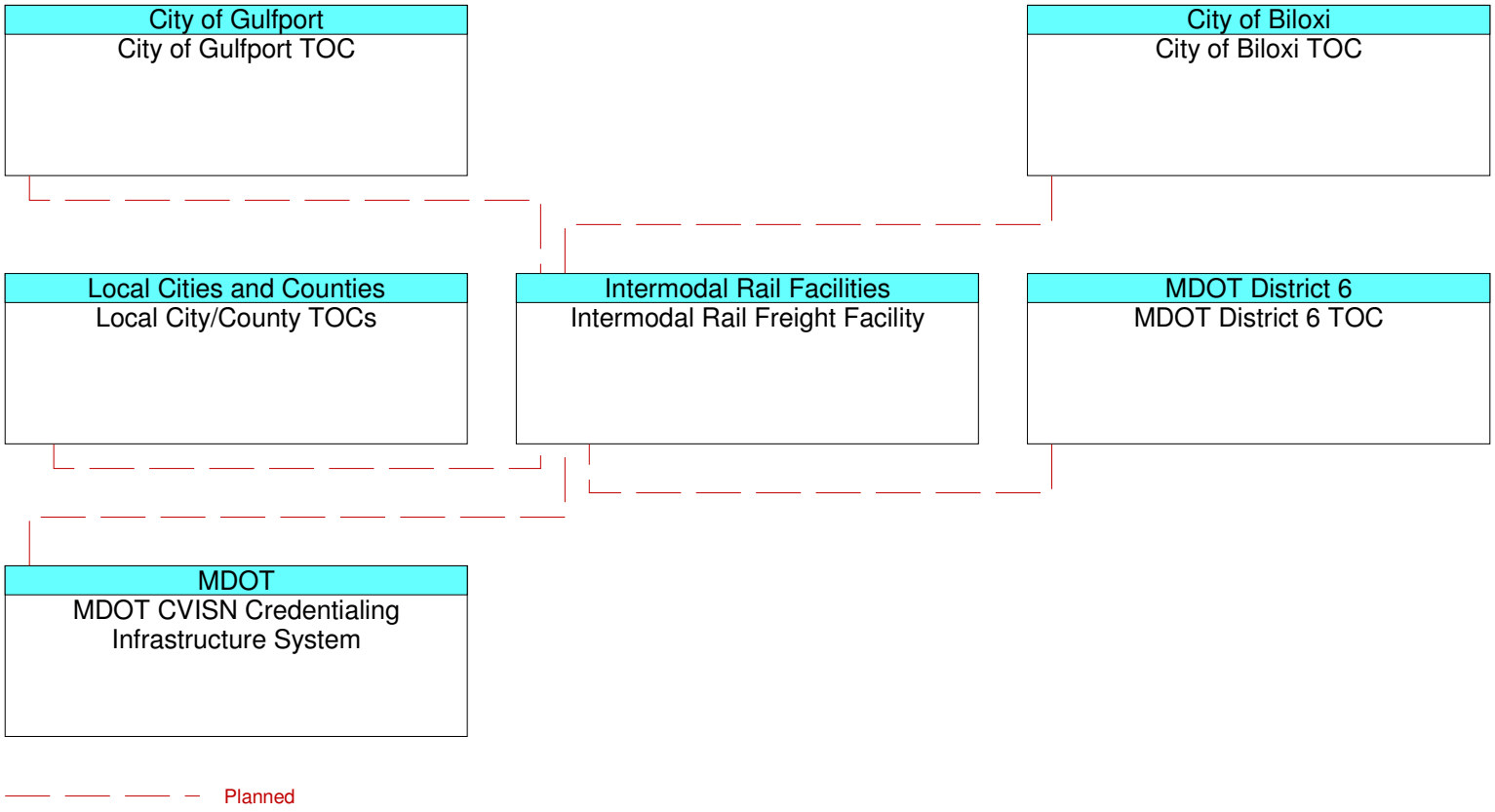
City of Gulfport
City of Gulfport TOC
City of Biloxi
City of Biloxi TOC
Local Cities and Counties
Local City/County TOCs
Intermodal Rail Facilities
Intermodal Rail Freight Facility
MDOT District 6
MDOT District 6 TOC
MDOT
MDOT CVISN Credentialing Infrastructure System
Planned

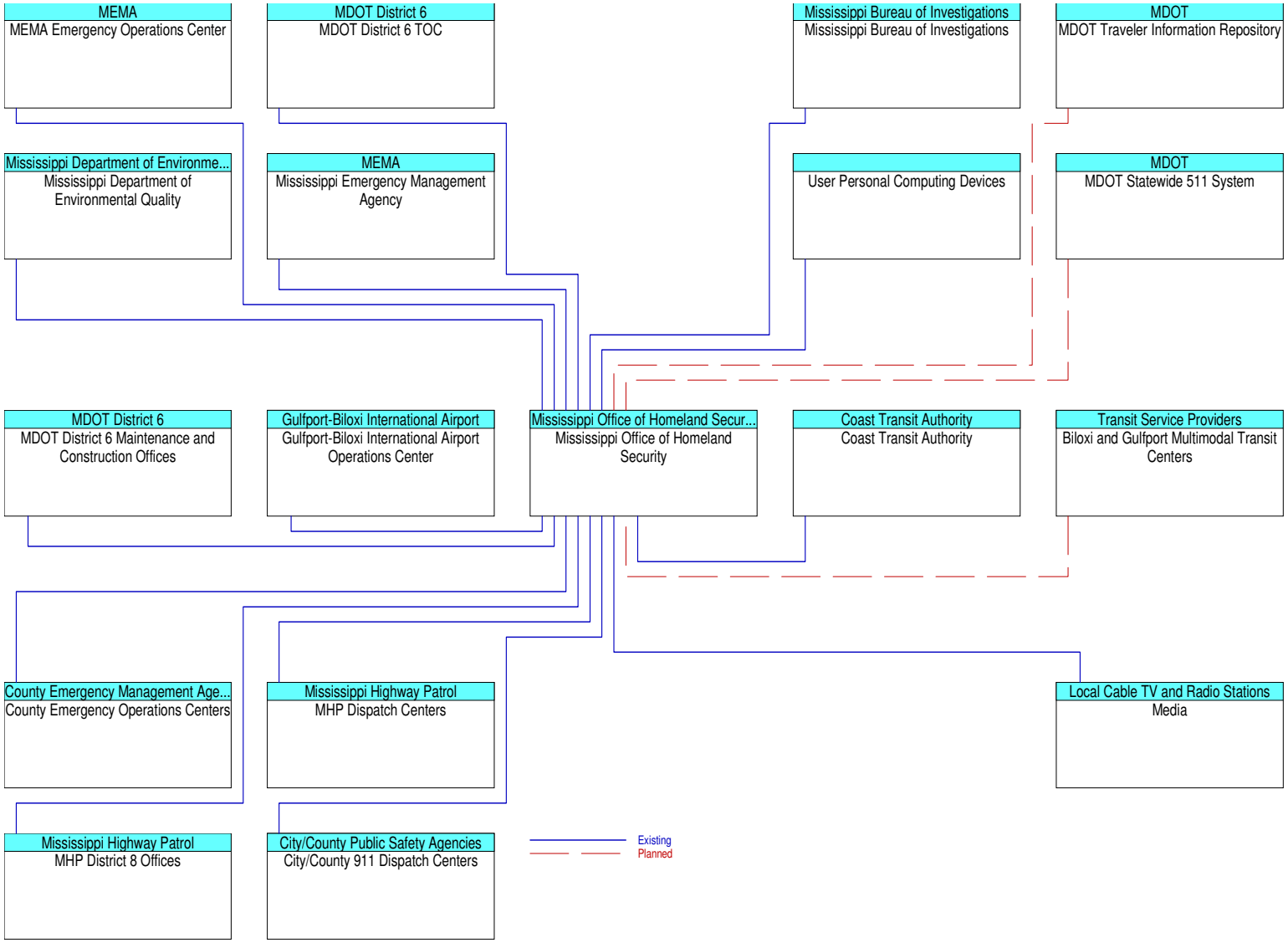
MEMA
MEMA Emergency Operations Center
MDOT District 6
MDOT District 6 TOC
Mississippi Bureau of Investigations
Mississippi Bureau of Investigations
MDOT
MDOT Traveler Information Repository
Mississippi Department of Environme...
Mississippi Department of Environmental Quality
MEMA
Mississippi Emergency Management Agency
User Personal Computing Devices
MDOT
MDOT Statewide 511 System
MDOT District 6
MDOT District 6 Maintenance and Construction Offices
Gulfport-Biloxi International Airport
Gulfport-Biloxi International Airport Operations Center
Mississippi Office of Homeland Secur...
Mississippi Office of Homeland Security
Coast Transit Authority
Coast Transit Authority
Transit Service Providers
Biloxi and Gulfport Multimodal Transit Centers
County Emergency Management Age...
County Emergency Operations Centers
Mississippi Highway Patrol
MHP Dispatch Centers
Local Cable TV and Radio Stations
Media
Mississippi Highway Patrol
MHP District 8 Offices
City/County Public Safety Agencies
City/County 911 Dispatch Centers
Existing
Planned

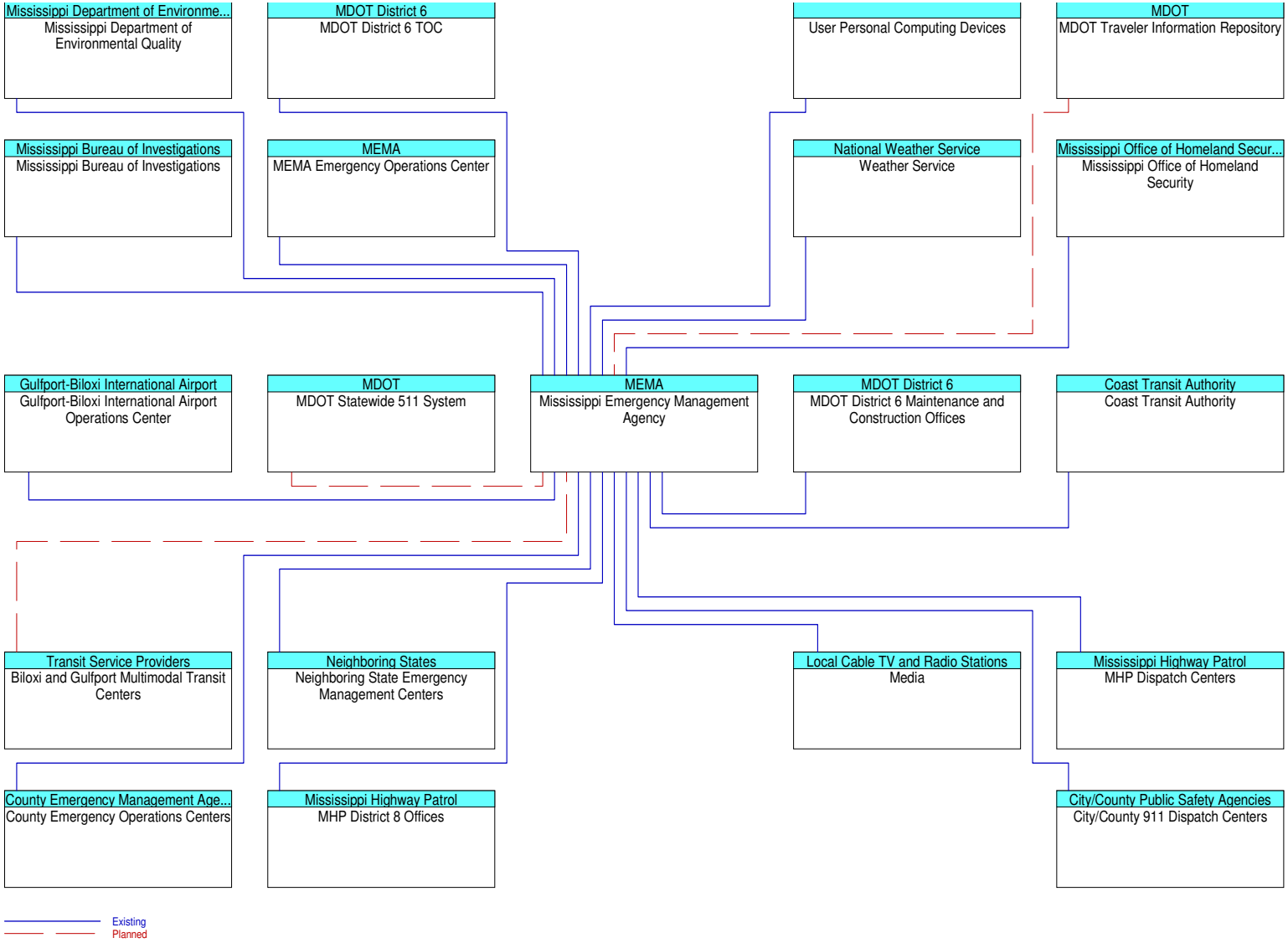
Mississippi Department of Environme...
Mississippi Department of Environmental Quality
MDOT District 6
MDOT District 6 TOC
User Personal Computing Devices
MDOT
MDOT Traveler Information Repository
Mississippi Bureau of Investigations
Mississippi Bureau of Investigations
MEMA
MEMA Emergency Operations Center
National Weather Service
Weather Service
Mississippi Office of Homeland Secur...
Mississippi Office of Homeland Security
Gulfport-Biloxi International Airport
Gulfport-Biloxi International Airport Operations Center
MDOT
MDOT Statewide 511 System
MEMA
Mississippi Emergency Management Agency
MDOT District 6
MDOT District 6 Maintenance and Construction Offices
Coast Transit Authority
Coast Transit Authority
Transit Service Providers
Biloxi and Gulfport Multimodal Transit Centers
Neighboring States
Neighboring State Emergency Management Centers
Local Cable TV and Radio Stations
Media
Mississippi Highway Patrol
MHP Dispatch Centers
County Emergency Management Age...
County Emergency Operations Centers
Mississippi Highway Patrol
MHP District 8 Offices
City/County Public Safety Agencies
City/County 911 Dispatch Centers
Existing
Planned

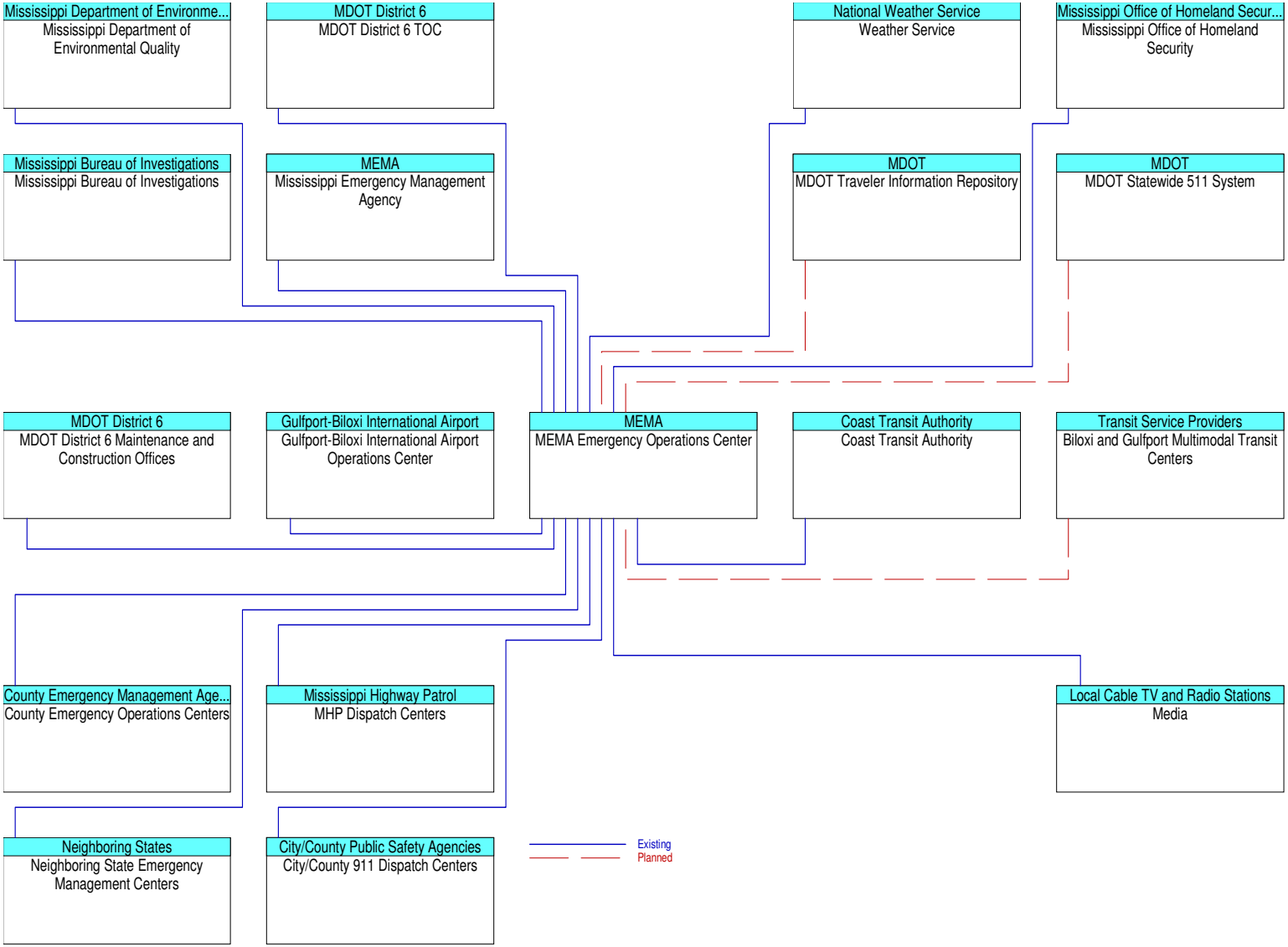
Mississippi Department of Environme...
Mississippi Department of Environmental Quality
MDOT District 6
MDOT District 6 TOC
National Weather Service
Weather Service
Mississippi Office of Homeland Secur...
Mississippi Office of Homeland Security
Mississippi Bureau of Investigations
Mississippi Bureau of Investigations
MEMA
Mississippi Emergency Management Agency
MDOT
MDOT Traveler Information Repository
MDOT
MDOT Statewide 511 System
MDOT District 6
MDOT District 6 Maintenance and Construction Offices
Gulfport-Biloxi International Airport
Gulfport-Biloxi International Airport Operations Center
MEMA
MEMA Emergency Operations Center
Coast Transit Authority
Coast Transit Authority
Transit Service Providers
Biloxi and Gulfport Multimodal Transit Centers
County Emergency Management Age...
County Emergency Operations Centers
Mississippi Highway Patrol
MHP Dispatch Centers
Local Cable TV and Radio Stations
Media
Neighboring States
Neighboring State Emergency Management Centers
City/County Public Safety Agencies
City/County 911 Dispatch Centers
Existing
Planned

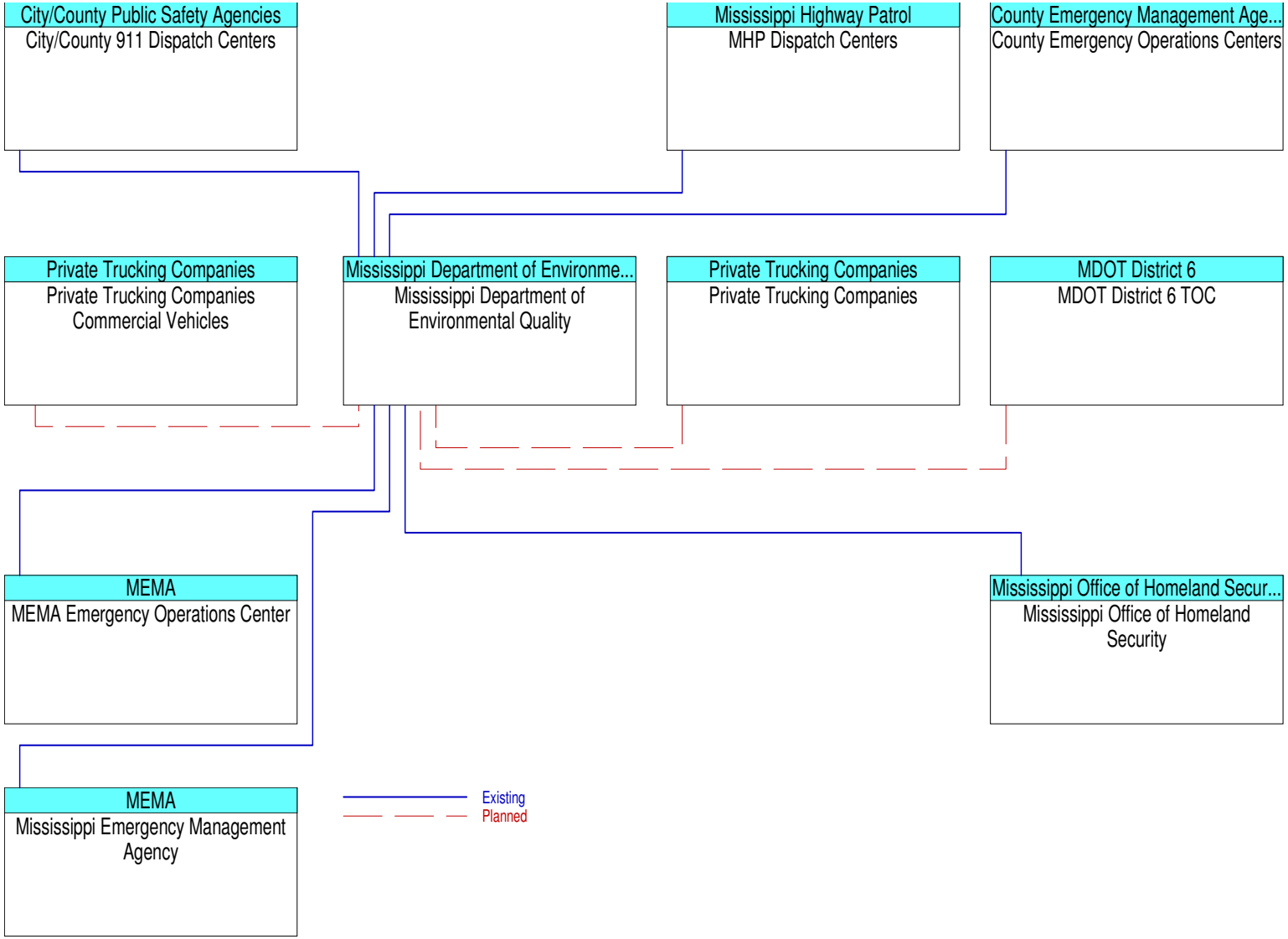
City/County Public Safety Agencies
City/County 911 Dispatch Centers
Mississippi Highway Patrol
MHP Dispatch Centers
County Emergency Management Age...
County Emergency Operations Centers
Private Trucking Companies
Private Trucking Companies Commercial Vehicles
Mississippi Department of Environme...
Mississippi Department of Environmental Quality
Private Trucking Companies
Private Trucking Companies
MDOT District 6
MDOT District 6 TOC
MEMA
MEMA Emergency Operations Center
Mississippi Office of Homeland Secur...
Mississippi Office of Homeland Security
MEMA
Mississippi Emergency Management Agency
Existing
Planned

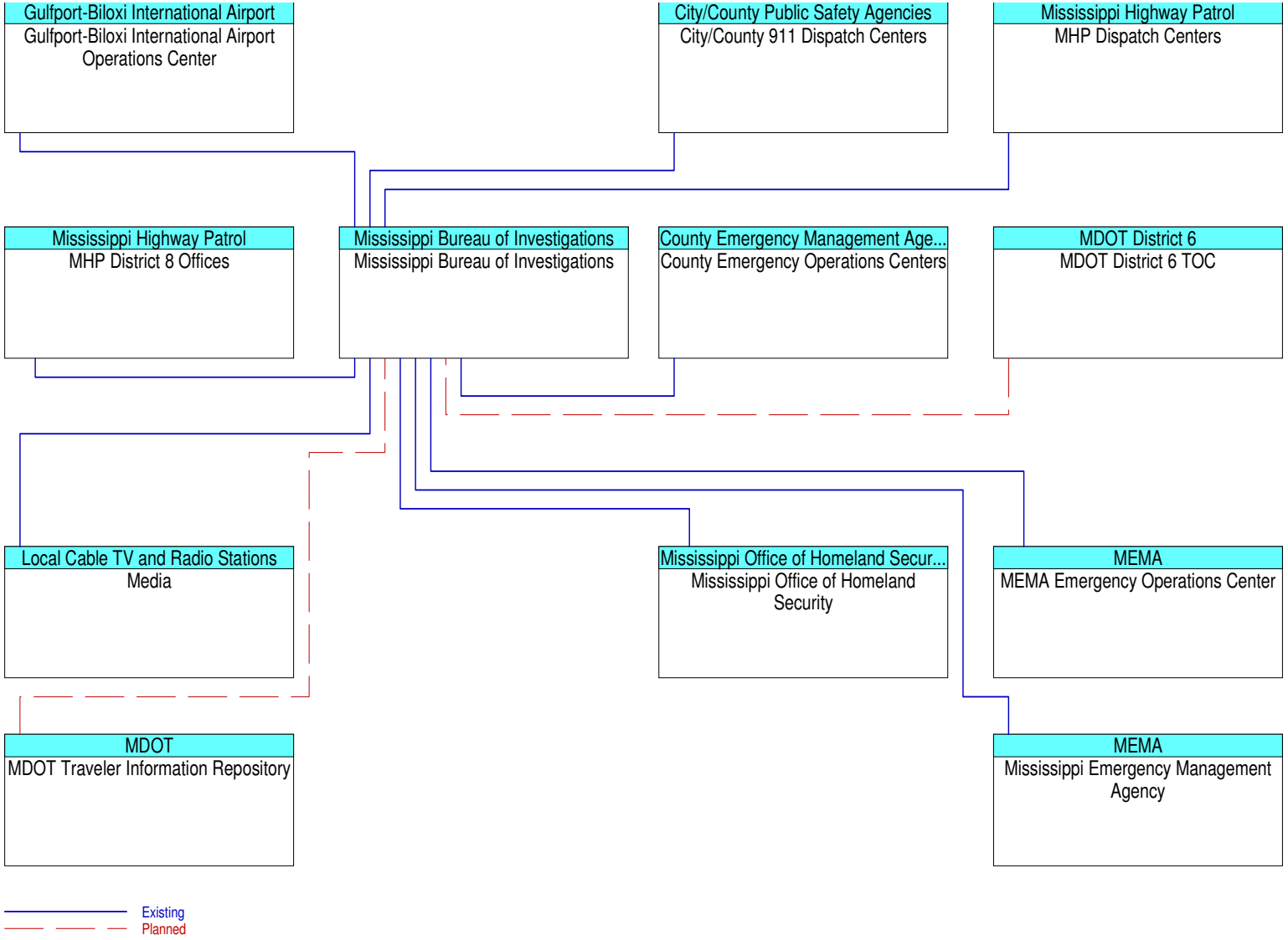
Gulfport-Biloxi International Airport
Gulfport-Biloxi International Airport Operations Center
City/County Public Safety Agencies
City/County 911 Dispatch Centers
Mississippi Highway Patrol
MHP Dispatch Centers
Mississippi Highway Patrol
MHP District 8 Offices
Mississippi Bureau of Investigations
Mississippi Bureau of Investigations
County Emergency Management Age...
County Emergency Operations Centers
MDOT District 6
MDOT District 6 TOC
Local Cable TV and Radio Stations
Media
Mississippi Office of Homeland Secur...
Mississippi Office of Homeland Security
MEMA
MEMA Emergency Operations Center
MDOT
MDOT Traveler Information Repository
MEMA
Mississippi Emergency Management Agency
Existing
Planned

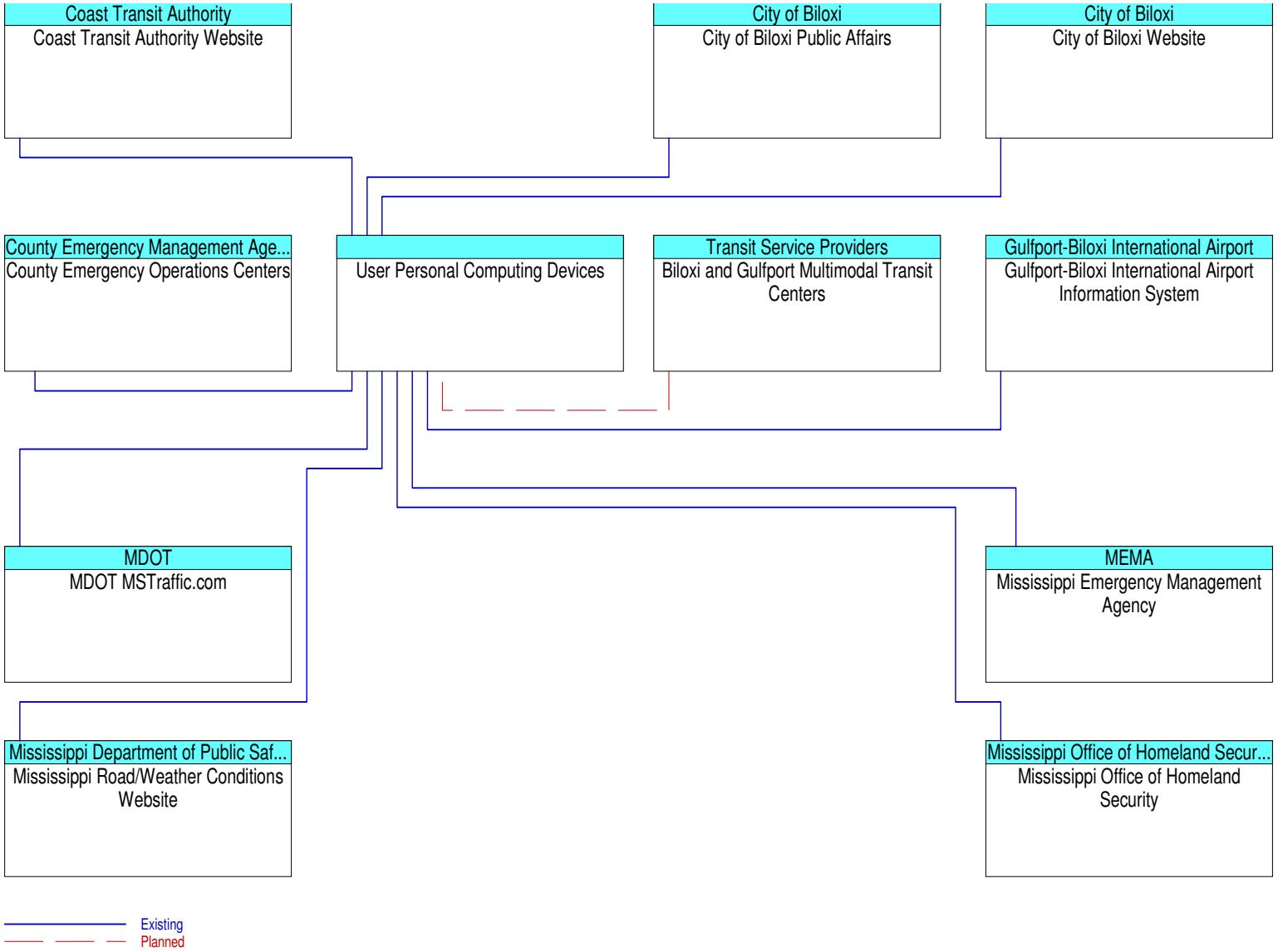
Coast Transit Authority
Coast Transit Authority Website
City of Biloxi
City of Biloxi Public Affairs
City of Biloxi
City of Biloxi Website
County Emergency Management Age...
County Emergency Operations Centers
User Personal Computing Devices
Transit Service Providers
Biloxi and Gulfport Multimodal Transit Centers
Gulfport-Biloxi International Airport
Gulfport-Biloxi International Airport Information System
MDOT
MDOT MSTraffic.com
MEMA
Mississippi Emergency Management Agency
Mississippi Department of Public Saf...
Mississippi Road/Weather Conditions Website
Mississippi Office of Homeland Secur...
Mississippi Office of Homeland Security
Existing
Planned

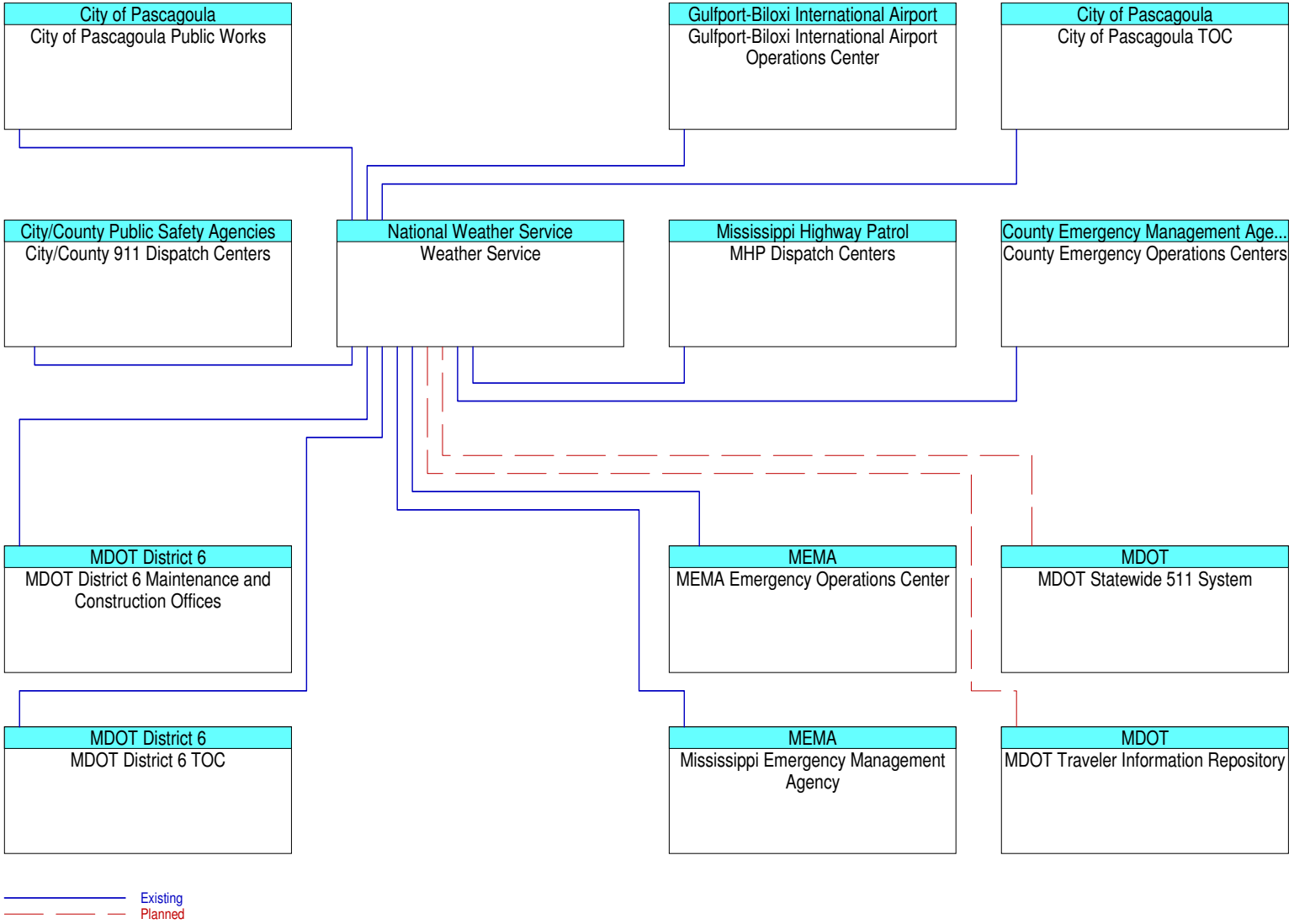
City of Pascagoula
City of Pascagoula Public Works
Gulfport-Biloxi International Airport
Gulfport-Biloxi International Airport Operations Center
City of Pascagoula
City of Pascagoula TOC
City/County Public Safety Agencies
City/County 911 Dispatch Centers
National Weather Service
Weather Service
Mississippi Highway Patrol
MHP Dispatch Centers
County Emergency Management Age...
County Emergency Operations Centers
MDOT District 6
MDOT District 6 Maintenance and Construction Offices
MEMA
MEMA Emergency Operations Center
MDOT
MDOT Statewide 511 System
MDOT District 6
MDOT District 6 TOC
MEMA
Mississippi Emergency Management Agency
MDOT
MDOT Traveler Information Repository
Existing
Planned

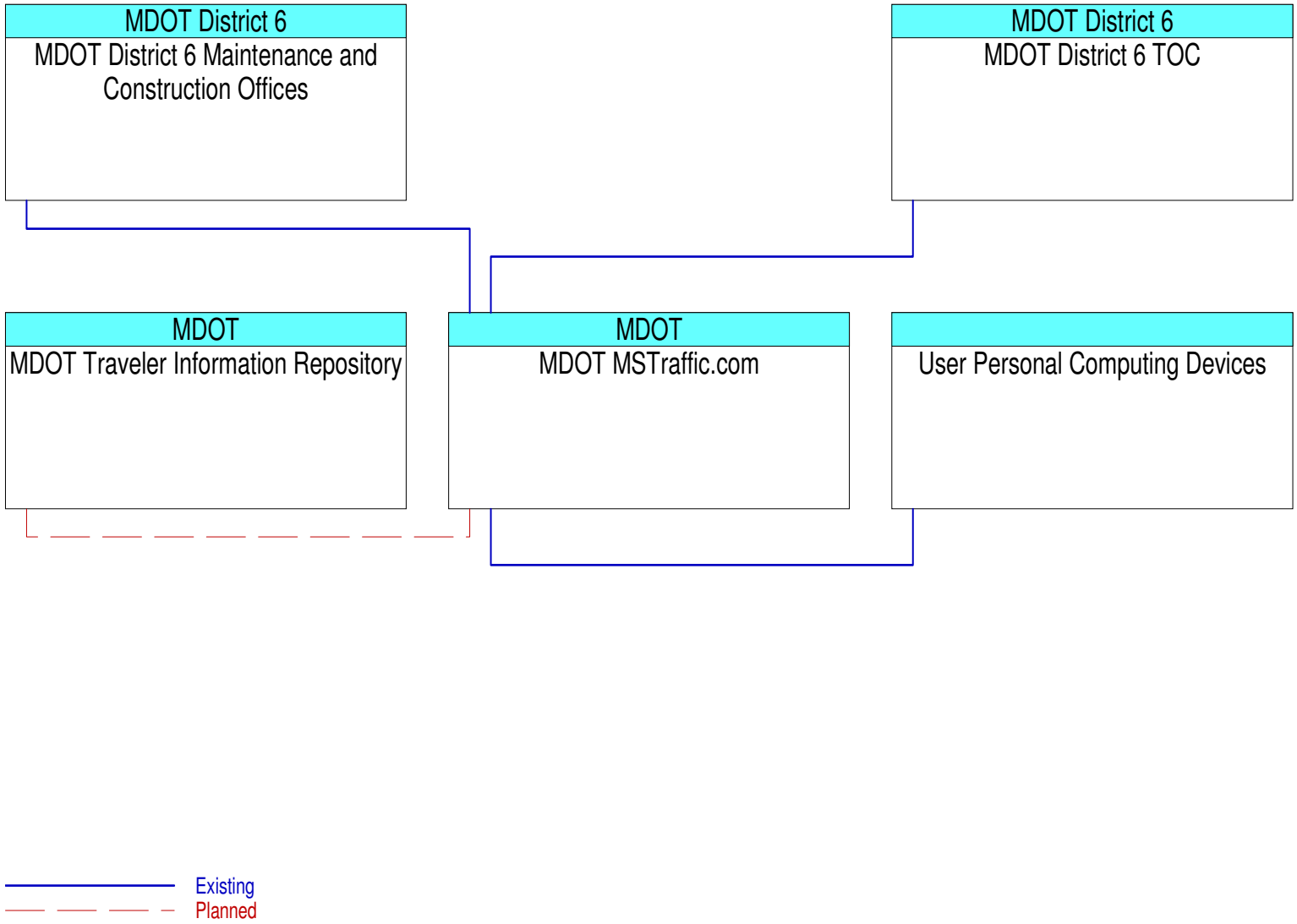
MDOT District 6
MDOT District 6 Maintenance and Construction Offices
MDOT District 6
MDOT District 6 TOC
MDOT
MDOT Traveler Information Repository
MDOT
MDOT MSTraffic.com
User Personal Computing Devices
Existing
Planned

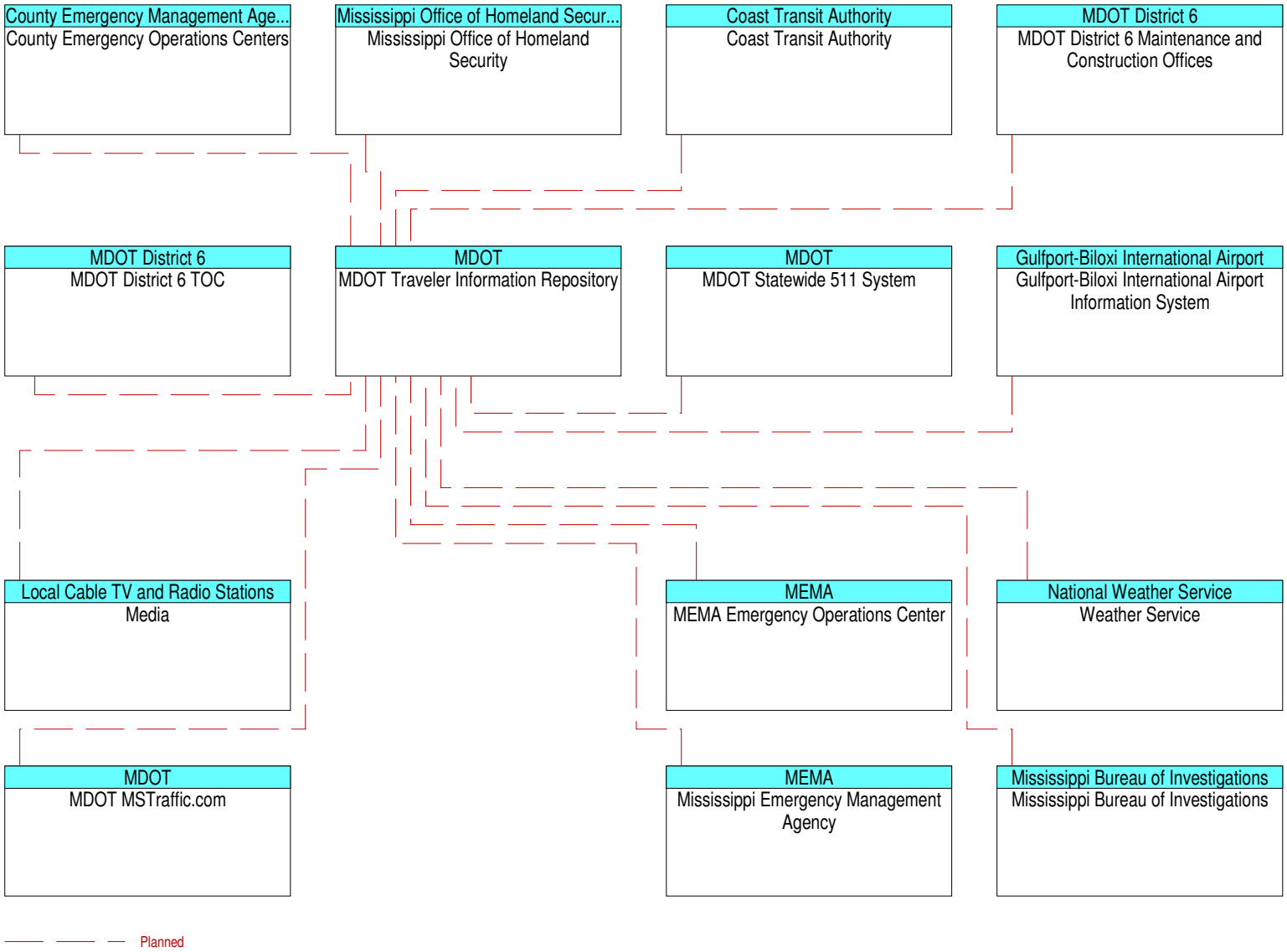
County Emergency Management Age...
County Emergency Operations Centers
Mississippi Office of Homeland Secur...
Mississippi Office of Homeland Security
Coast Transit Authority
Coast Transit Authority
MDOT District 6
MDOT District 6 Maintenance and Construction Offices
MDOT District 6
MDOT District 6 TOC
MDOT
MDOT Traveler Information Repository
MDOT
MDOT Statewide 511 System
Gulfport-Biloxi International Airport
Gulfport-Biloxi International Airport Information System
Local Cable TV and Radio Stations
Media
MEMA
MEMA Emergency Operations Center
National Weather Service
Weather Service
MDOT
MDOT MSTraffic.com
MEMA
Mississippi Emergency Management Agency
Mississippi Bureau of Investigations
Mississippi Bureau of Investigations
Planned

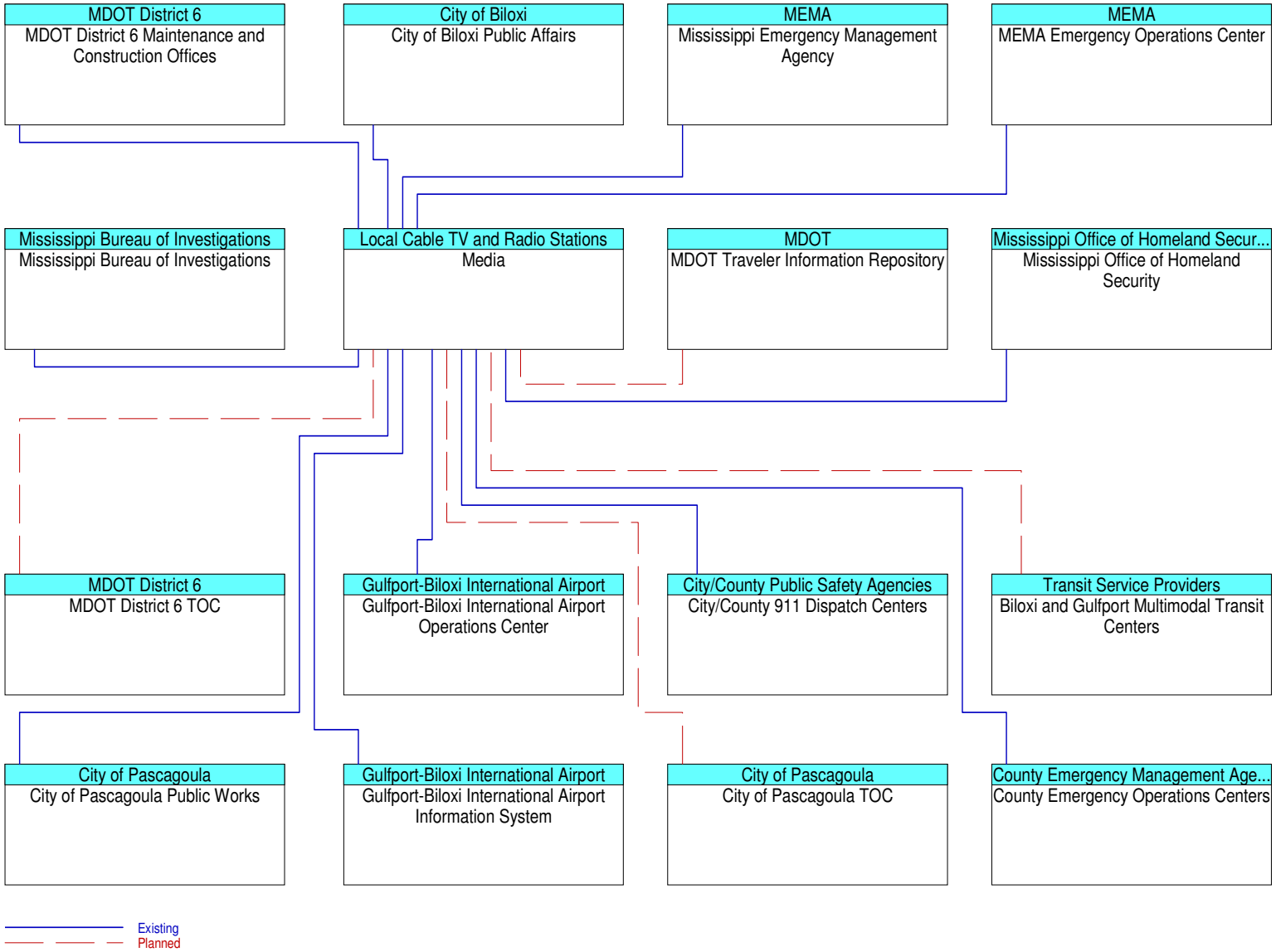
MDOT District 6
MDOT District 6 Maintenance and Construction Offices
City of Biloxi
City of Biloxi Public Affairs
MEMA
Mississippi Emergency Management Agency
MEMA
MEMA Emergency Operations Center
Mississippi Bureau of Investigations
Mississippi Bureau of Investigations
Local Cable TV and Radio Stations
Media
MDOT
MDOT Traveler Information Repository
Mississippi Office of Homeland Secur...
Mississippi Office of Homeland Security
MDOT District 6
MDOT District 6 TOC
Gulfport-Biloxi International Airport
Gulfport-Biloxi International Airport Operations Center
City/County Public Safety Agencies
City/County 911 Dispatch Centers
Transit Service Providers
Biloxi and Gulfport Multimodal Transit Centers
City of Pascagoula
City of Pascagoula Public Works
Gulfport-Biloxi International Airport
Gulfport-Biloxi International Airport Information System
City of Pascagoula
City of Pascagoula TOC
County Emergency Management Age...
County Emergency Operations Centers
Existing
Planned

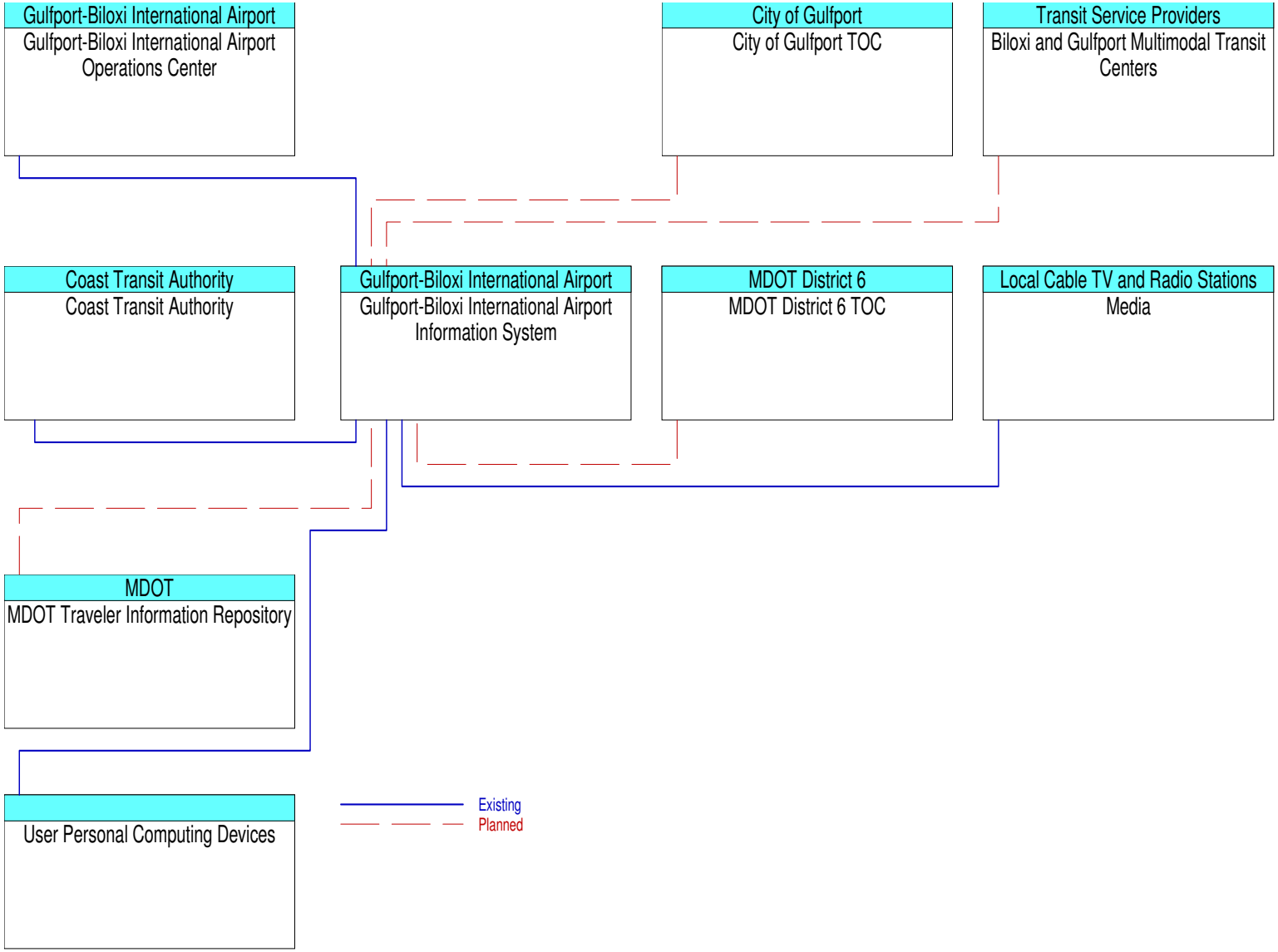
Gulfport-Biloxi International Airport
Gulfport-Biloxi International Airport Operations Center
City of Gulfport
City of Gulfport TOC
Transit Service Providers
Biloxi and Gulfport Multimodal Transit Centers
Coast Transit Authority
Coast Transit Authority
Gulfport-Biloxi International Airport
Gulfport-Biloxi International Airport Information System
MDOT District 6
MDOT District 6 TOC
Local Cable TV and Radio Stations
Media
MDOT
MDOT Traveler Information Repository
User Personal Computing Devices
Existing
Planned

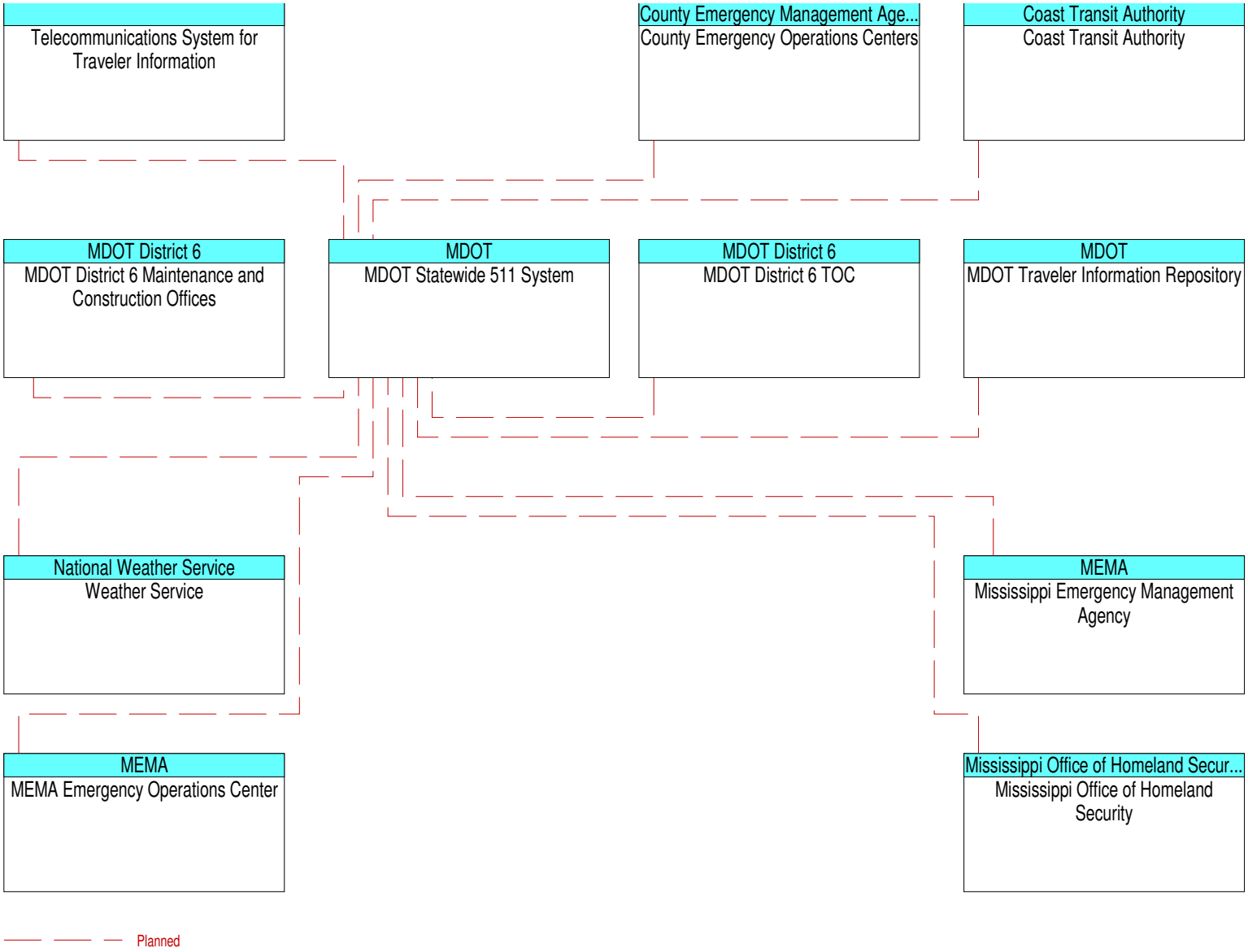
Telecommunications System for Traveler Information
County Emergency Management Age...
County Emergency Operations Centers
Coast Transit Authority
Coast Transit Authority
MDOT District 6
MDOT District 6 Maintenance and Construction Offices
MDOT
MDOT Statewide 511 System
MDOT District 6
MDOT District 6 TOC
MDOT
MDOT Traveler Information Repository
National Weather Service
Weather Service
MEMA
Mississippi Emergency Management Agency
MEMA
MEMA Emergency Operations Center
Mississippi Office of Homeland Secur...
Mississippi Office of Homeland Security
Planned

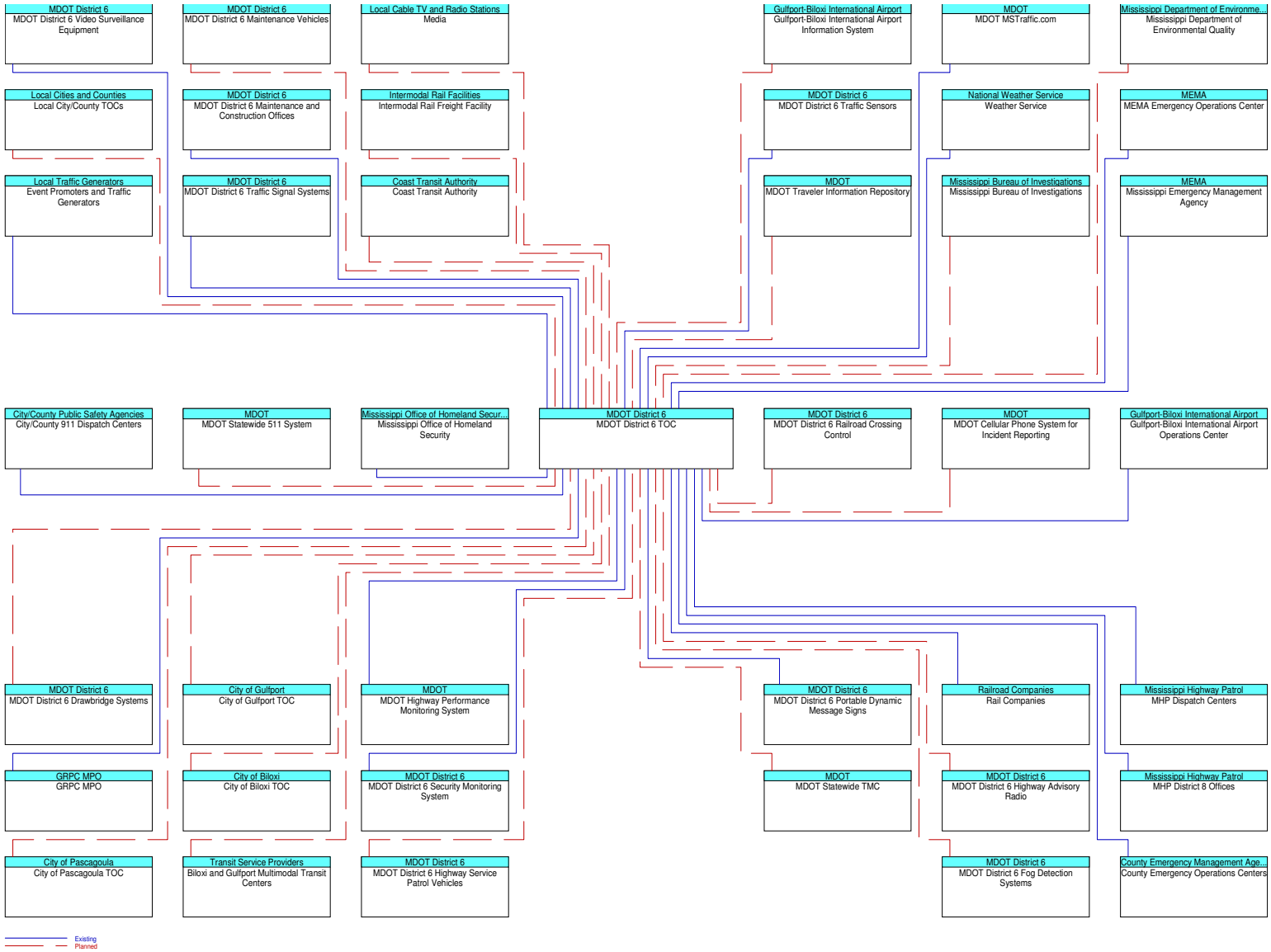
MDOT District 6
MDOT District 6 Video Surveillance Equipment
MDOT District 6
MDOT District 6 Maintenance Vehicles
Local Cable TV and Radio Stations
Media
Gulfport-Biloxi International Airport
Gulfport-Biloxi International Airport Information System
MDOT
MDOT MSTraffic.com
Mississippi Department of Environme...
Mississippi Department of Environmental Quality
Local Cities and Counties
Local City/County TOCs
MDOT District 6
MDOT District 6 Maintenance and Construction Offices
Intermodal Rail Facilities
Intermodal Rail Freight Facility
MDOT District 6
MDOT District 6 Traffic Sensors
National Weather Service
Weather Service
MEMA
MEMA Emergency Operations Center
Local Traffic Generators
Event Promoters and Traffic Generators
MDOT District 6
MDOT District 6 Traffic Signal Systems
Coast Transit Authority
Coast Transit Authority
MDOT
MDOT Traveler Information Repository
Mississippi Bureau of Investigations
Mississippi Bureau of Investigations
MEMA
Mississippi Emergency Management Agency
City/County Public Safety Agencies
City/County 911 Dispatch Centers
MDOT
MDOT Statewide 511 System
Mississippi Office of Homeland Secur...
Mississippi Office of Homeland Security
MDOT District 6
MDOT District 6 TOC
MDOT District 6
MDOT District 6 Railroad Crossing Control
MDOT
MDOT Cellular Phone System for Incident Reporting
Gulfport-Biloxi International Airport
Gulfport-Biloxi International Airport Operations Center
MDOT District 6
MDOT District 6 Drawbridge Systems
City of Gulfport
City of Gulfport TOC
MDOT
MDOT Highway Performance Monitoring System
MDOT District 6
MDOT District 6 Portable Dynamic Message Signs
Railroad Companies
Rail Companies
Mississippi Highway Patrol
MHP Dispatch Centers
GRPC MPO
GRPC MPO
City of Biloxi
City of Biloxi TOC
MDOT District 6
MDOT District 6 Security Monitoring System
MDOT
MDOT Statewide TMC
MDOT District 6
MDOT District 6 Highway Advisory Radio
Mississippi Highway Patrol
MHP District 8 Offices
City of Pascagoula
City of Pascagoula TOC
Transit Service Providers
Biloxi and Gulfport Multimodal Transit Centers
MDOT District 6
MDOT District 6 Highway Service Patrol Vehicles
MDOT District 6
MDOT District 6 Fog Detection Systems
County Emergency Management Age...
County Emergency Operations Centers
Existing
Planned

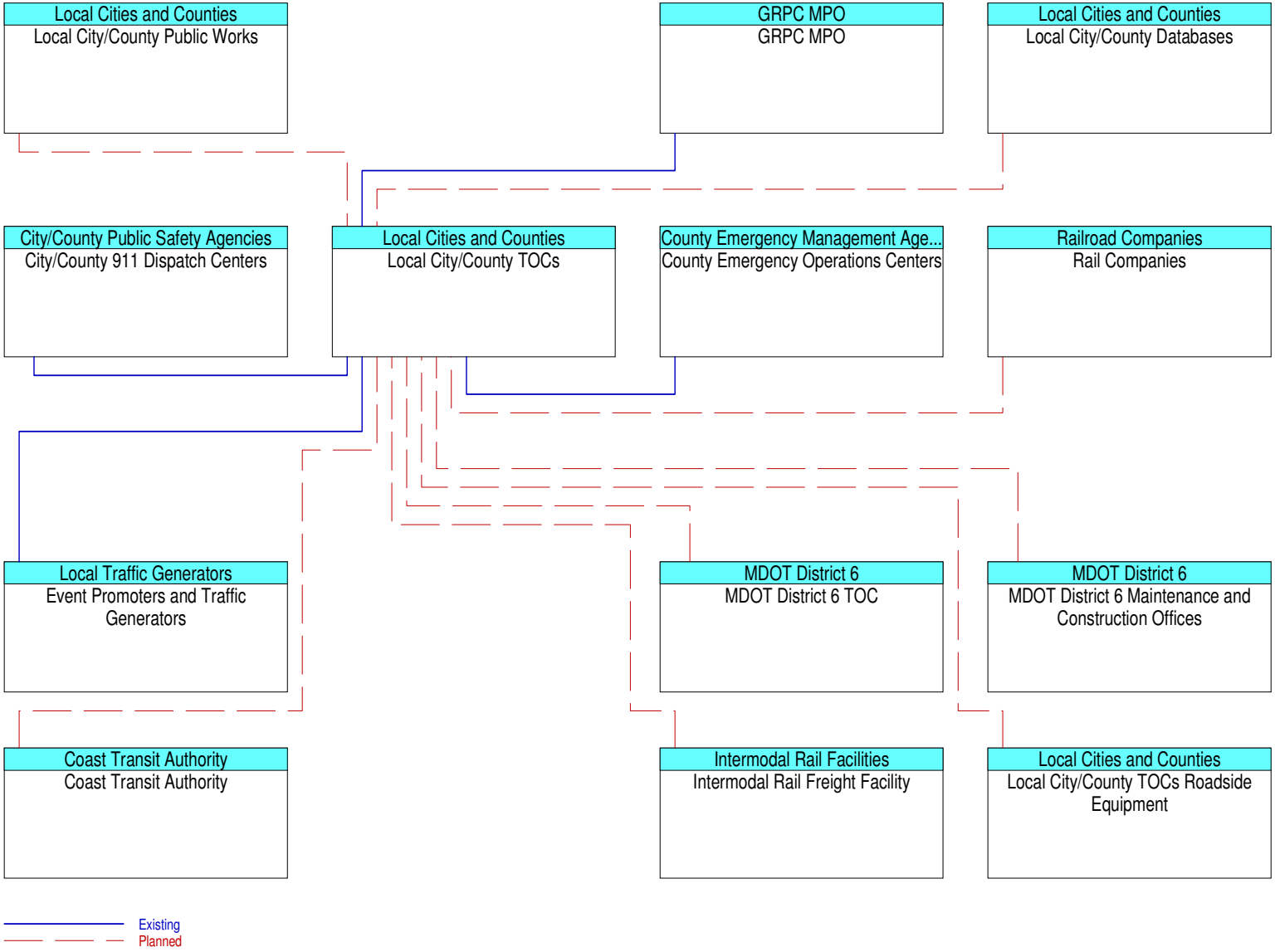
Local Cities and Counties
Local City/County Public Works
GRPC MPO
GRPC MPO
Local Cities and Counties
Local City/County Databases
City/County Public Safety Agencies
City/County 911 Dispatch Centers
Local Cities and Counties
Local City/County TOCs
County Emergency Management Age...
County Emergency Operations Centers
Railroad Companies
Rail Companies
Local Traffic Generators
Event Promoters and Traffic Generators
MDOT District 6
MDOT District 6 TOC
MDOT District 6
MDOT District 6 Maintenance and Construction Offices
Coast Transit Authority
Coast Transit Authority
Intermodal Rail Facilities
Intermodal Rail Freight Facility
Local Cities and Counties
Local City/County TOCs Roadside Equipment
Existing
Planned

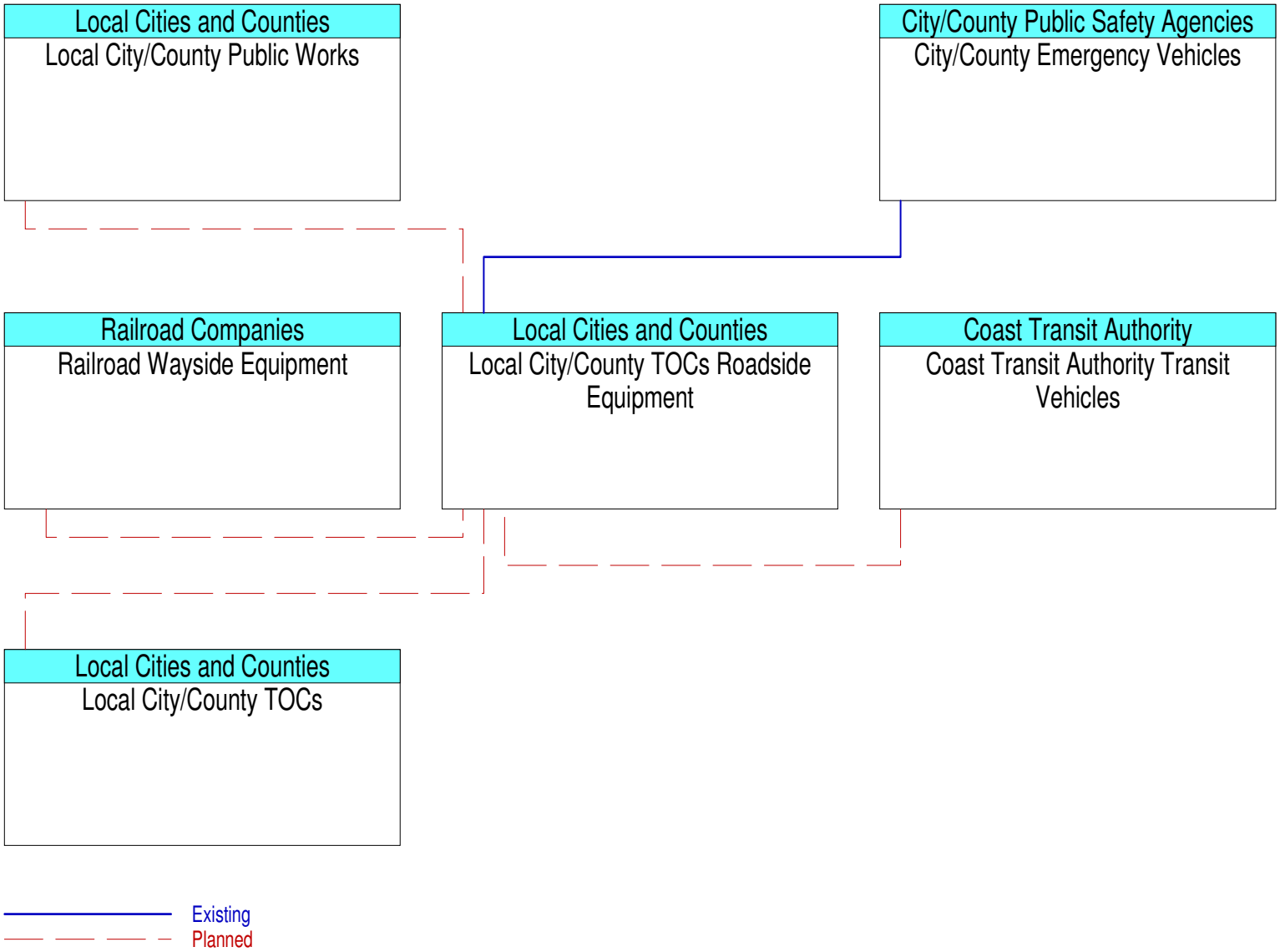
Local Cities and Counties
Local City/County Public Works
City/County Public Safety Agencies
City/County Emergency Vehicles
Railroad Companies
Railroad Wayside Equipment
Local Cities and Counties
Local City/County TOCs Roadside Equipment
Coast Transit Authority
Coast Transit Authority Transit Vehicles
Local Cities and Counties
Local City/County TOCs
Existing
Planned

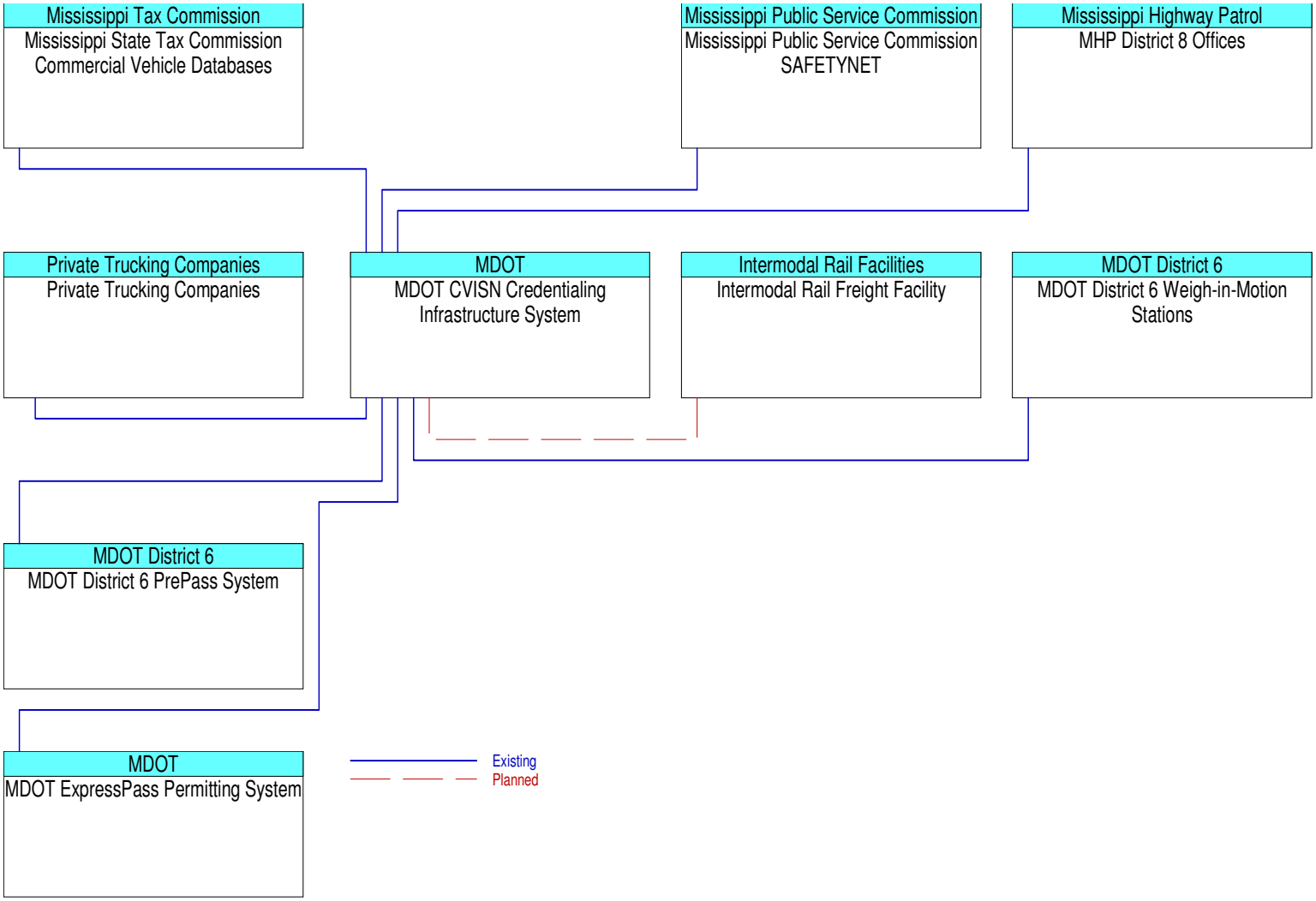
Mississippi Tax Commission
Mississippi State Tax Commission Commercial Vehicle Databases
Mississippi Public Service Commission
Mississippi Public Service Commission SAFETYNET
Mississippi Highway Patrol
MHP District 8 Offices
Private Trucking Companies
Private Trucking Companies
MDOT
MDOT CVISN Credentialing Infrastructure System
Intermodal Rail Facilities
Intermodal Rail Freight Facility
MDOT District 6
MDOT District 6 Weigh-in-Motion Stations
MDOT District 6
MDOT District 6 PrePass System
MDOT
MDOT ExpressPass Permitting System
Existing
Planned

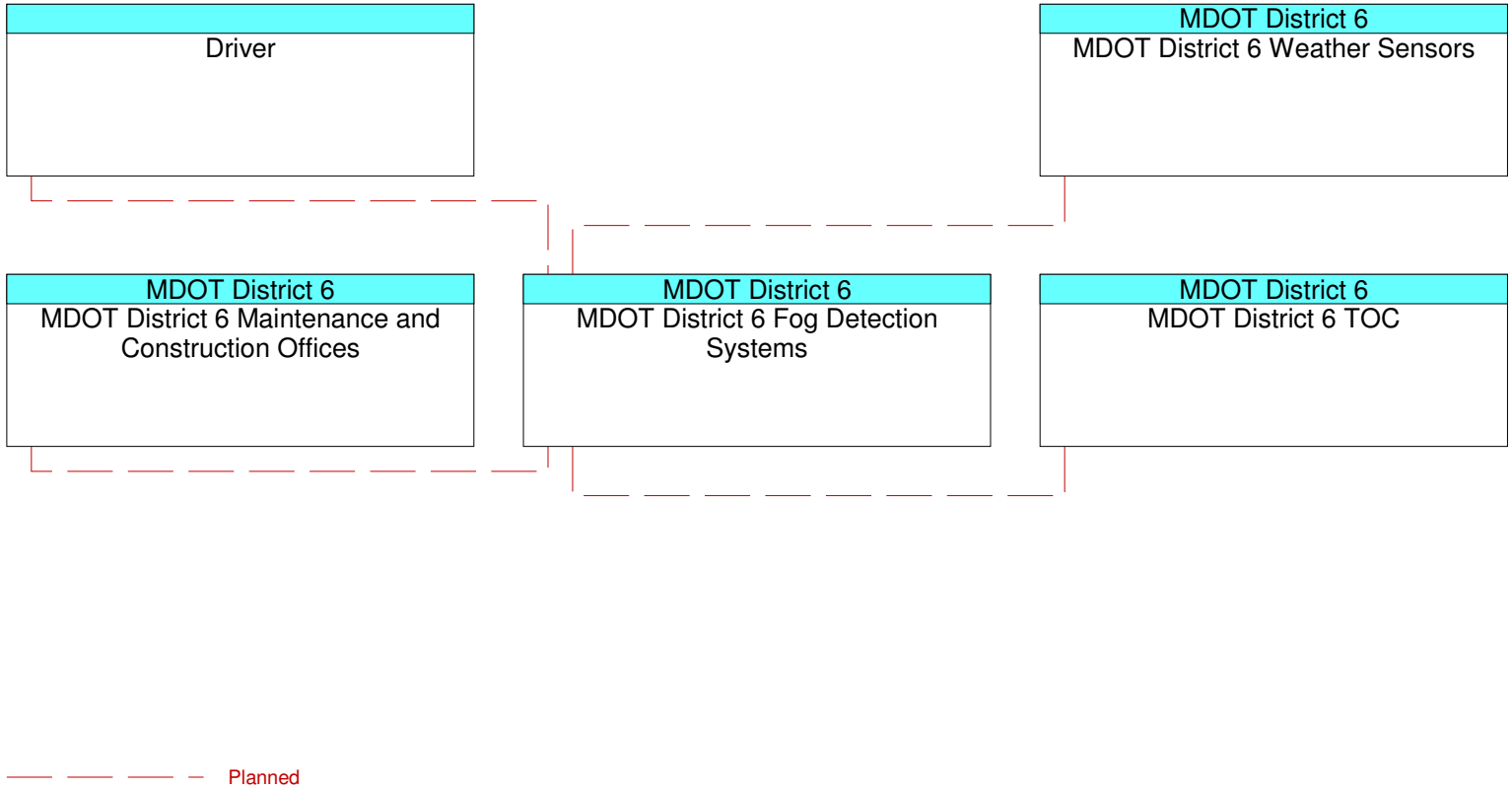
Driver
MDOT District 6
MDOT District 6 Weather Sensors
MDOT District 6
MDOT District 6 Maintenance and Construction Offices
MDOT District 6
MDOT District 6 Fog Detection Systems
MDOT District 6
MDOT District 6 TOC
Planned

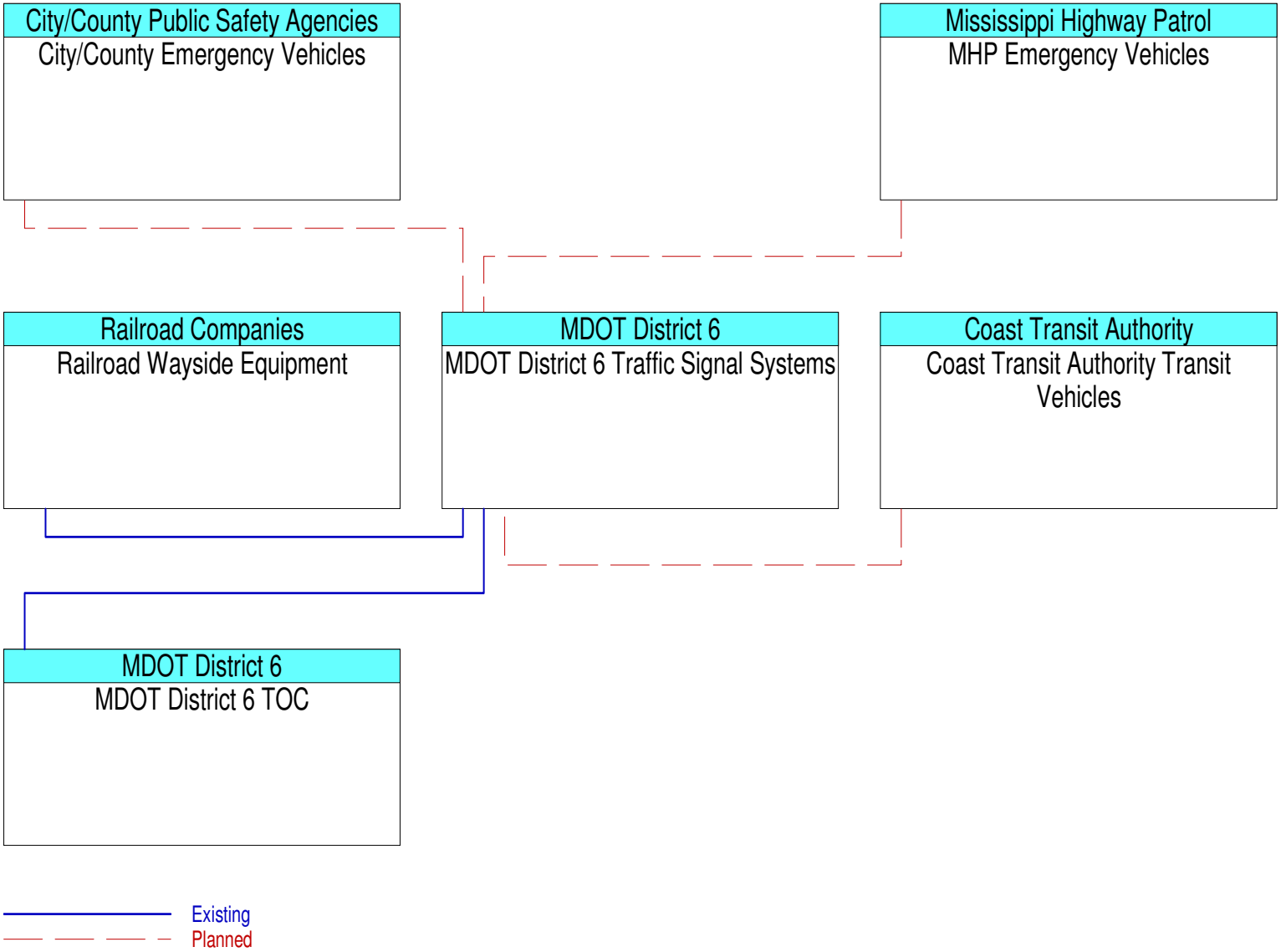
City/County Public Safety Agencies
City/County Emergency Vehicles
Mississippi Highway Patrol
MHP Emergency Vehicles
Railroad Companies
Railroad Wayside Equipment
MDOT District 6
MDOT District 6 Traffic Signal Systems
Coast Transit Authority
Coast Transit Authority Transit Vehicles
MDOT District 6
MDOT District 6 TOC
Existing
Planned

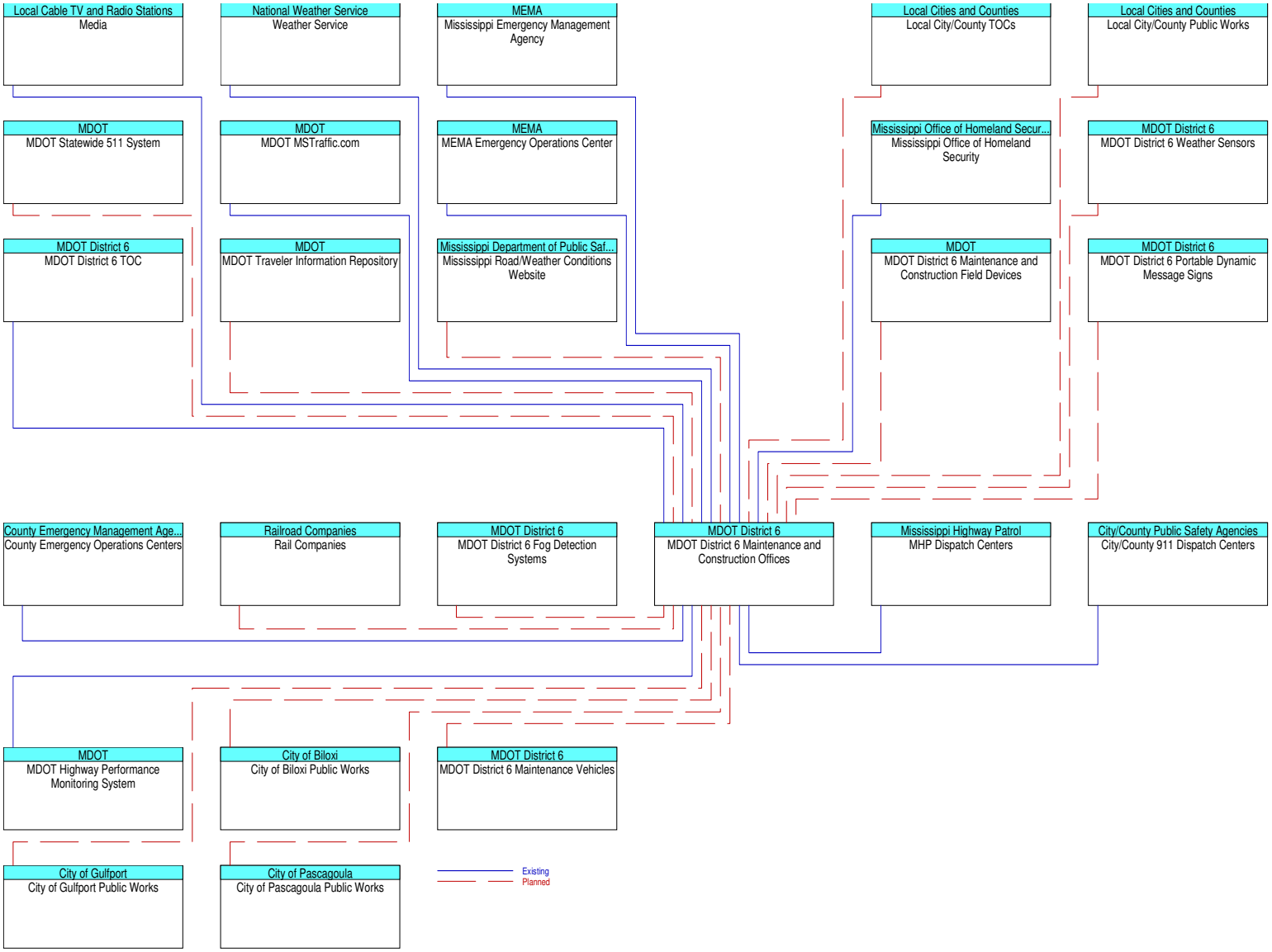
Local Cable TV and Radio Stations
Media
National Weather Service
Weather Service
MEMA
Mississippi Emergency Management Agency
Local Cities and Counties
Local City/County TOCs
Local Cities and Counties
Local City/County Public Works
MDOT
MDOT Statewide 511 System
MDOT
MDOT MSTraffic.com
MEMA
MEMA Emergency Operations Center
Mississippi Office of Homeland Secur...
Mississippi Office of Homeland Security
MDOT District 6
MDOT District 6 Weather Sensors
MDOT District 6
MDOT District 6 TOC
MDOT
MDOT Traveler Information Repository
Mississippi Department of Public Saf...
Mississippi Road/Weather Conditions Website
MDOT
MDOT District 6 Maintenance and Construction Field Devices
MDOT District 6
MDOT District 6 Portable Dynamic Message Signs
County Emergency Management Age...
County Emergency Operations Centers
Railroad Companies
Rail Companies
MDOT District 6
MDOT District 6 Fog Detection Systems
MDOT District 6
MDOT District 6 Maintenance and Construction Offices
Mississippi Highway Patrol
MHP Dispatch Centers
City/County Public Safety Agencies
City/County 911 Dispatch Centers
MDOT
MDOT Highway Performance Monitoring System
City of Biloxi
City of Biloxi Public Works
MDOT District 6
MDOT District 6 Maintenance Vehicles
City of Gulfport
City of Gulfport Public Works
City of Pascagoula
City of Pascagoula Public Works
Existing
Planned

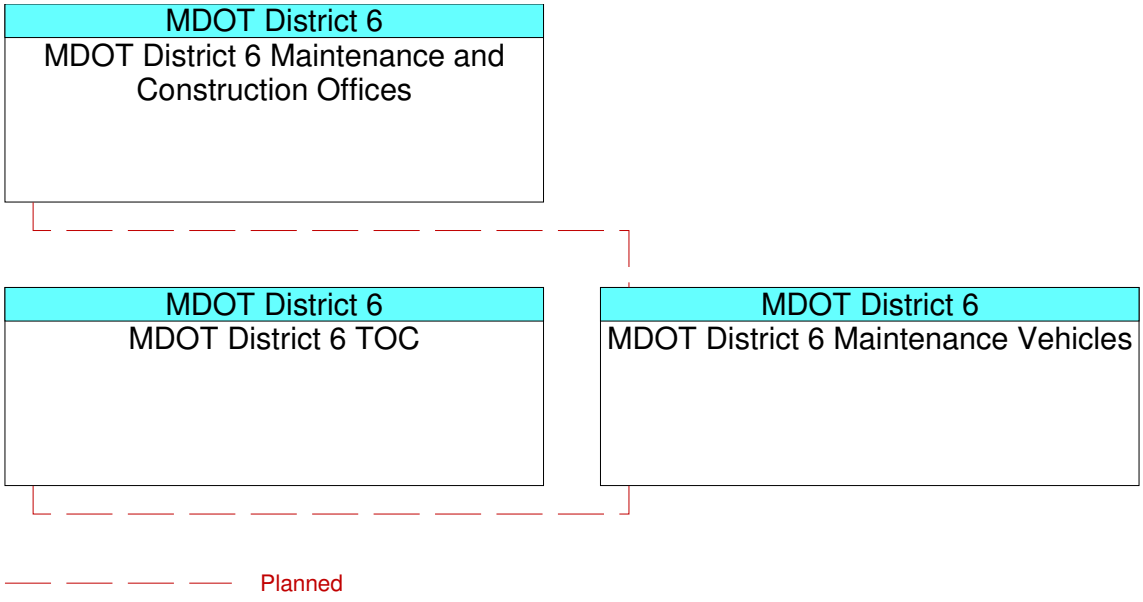
MDOT District 6
MDOT District 6 Maintenance and Construction Offices
MDOT District 6
MDOT District 6 TOC
MDOT District 6
MDOT District 6 Maintenance Vehicles
Planned

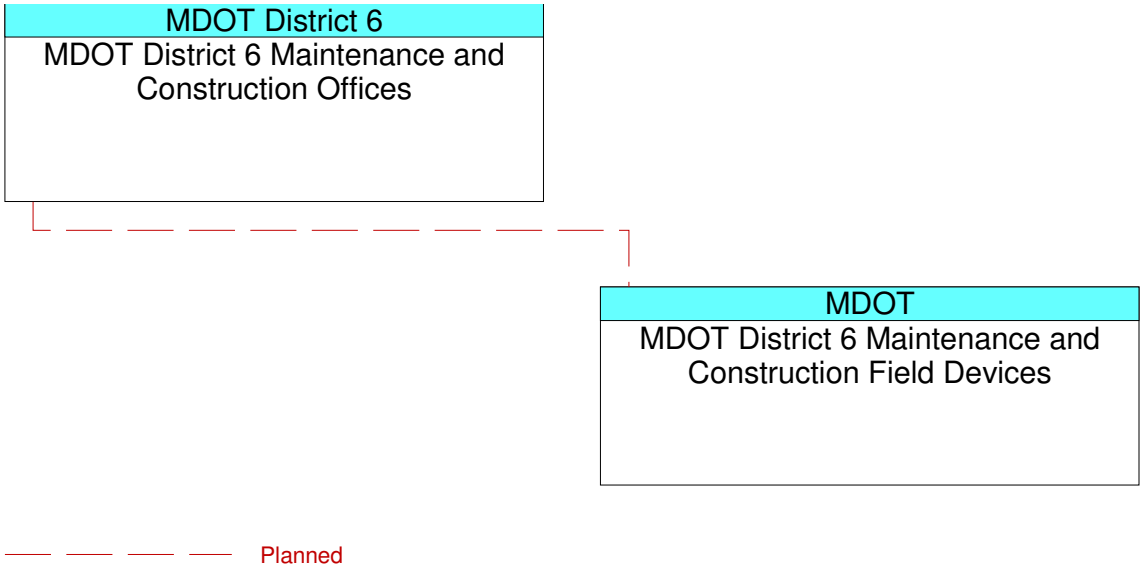
MDOT District 6
MDOT District 6 Maintenance and Construction Offices
MDOT
MDOT District 6 Maintenance and Construction Field Devices
Planned

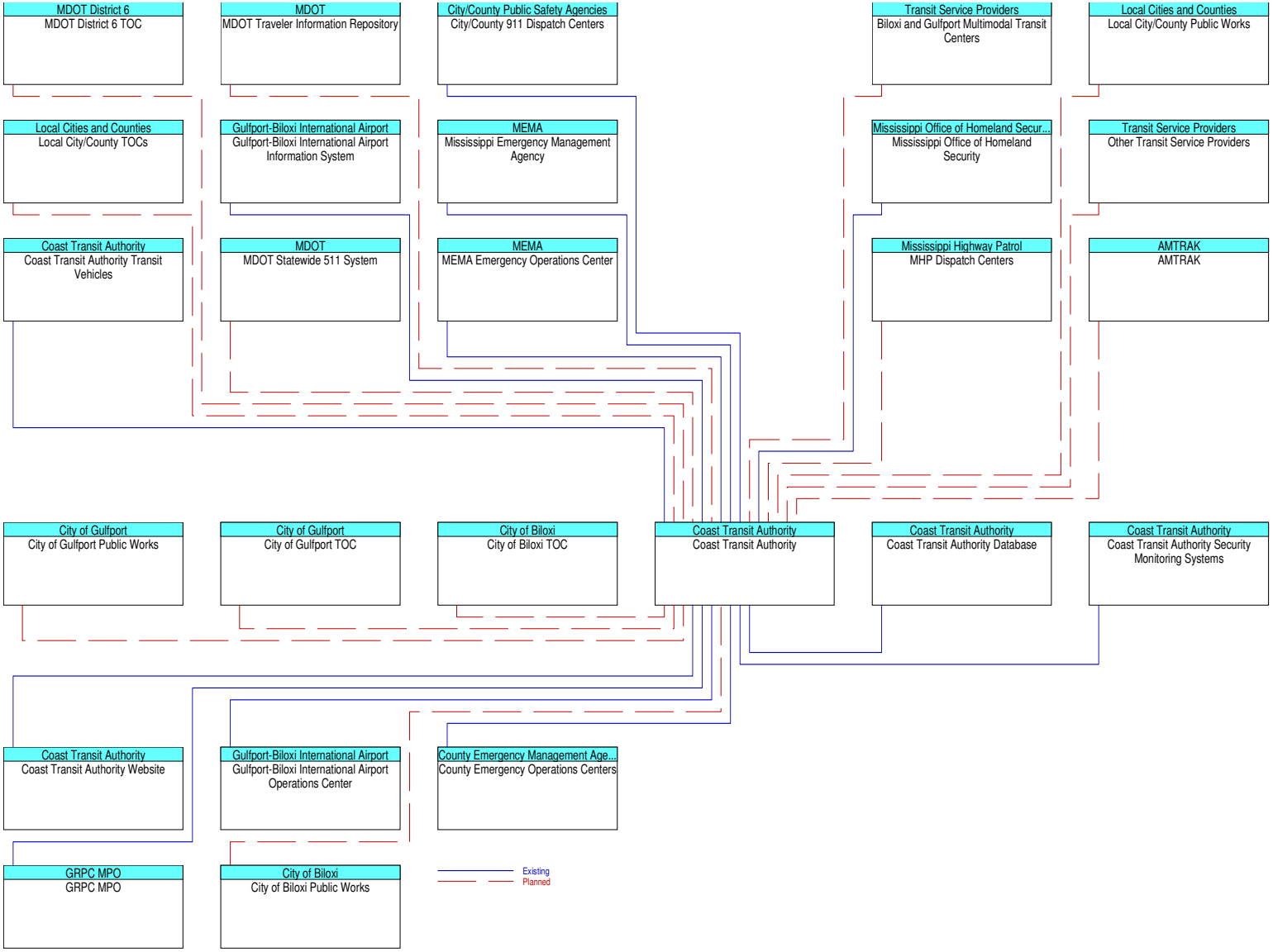
MDOT District 6
MDOT District 6 TOC
MDOT
MDOT Traveler Information Repository
City/County Public Safety Agencies
City/County 911 Dispatch Centers
Transit Service Providers
Biloxi and Gulfport Multimodal Transit Centers
Local Cities and Counties
Local City/County Public Works
Local Cities and Counties
Local City/County TOCs
Gulfport-Biloxi International Airport
Gulfport-Biloxi International Airport Information System
MEMA
Mississippi Emergency Management Agency
Mississippi Office of Homeland Secur...
Mississippi Office of Homeland Security
Transit Service Providers
Other Transit Service Providers
Coast Transit Authority
Coast Transit Authority Transit Vehicles
MDOT
MDOT Statewide 511 System
MEMA
MEMA Emergency Operations Center
Mississippi Highway Patrol
MHP Dispatch Centers
AMTRAK
AMTRAK
City of Gulfport
City of Gulfport Public Works
City of Gulfport
City of Gulfport TOC
City of Biloxi
City of Biloxi TOC
Coast Transit Authority
Coast Transit Authority
Coast Transit Authority
Coast Transit Authority Database
Coast Transit Authority
Coast Transit Authority Security Monitoring Systems
Coast Transit Authority
Coast Transit Authority Website
Gulfport-Biloxi International Airport
Gulfport-Biloxi International Airport Operations Center
County Emergency Management Age...
County Emergency Operations Centers
GRPC MPO
GRPC MPO
City of Biloxi
City of Biloxi Public Works
Existing
Planned

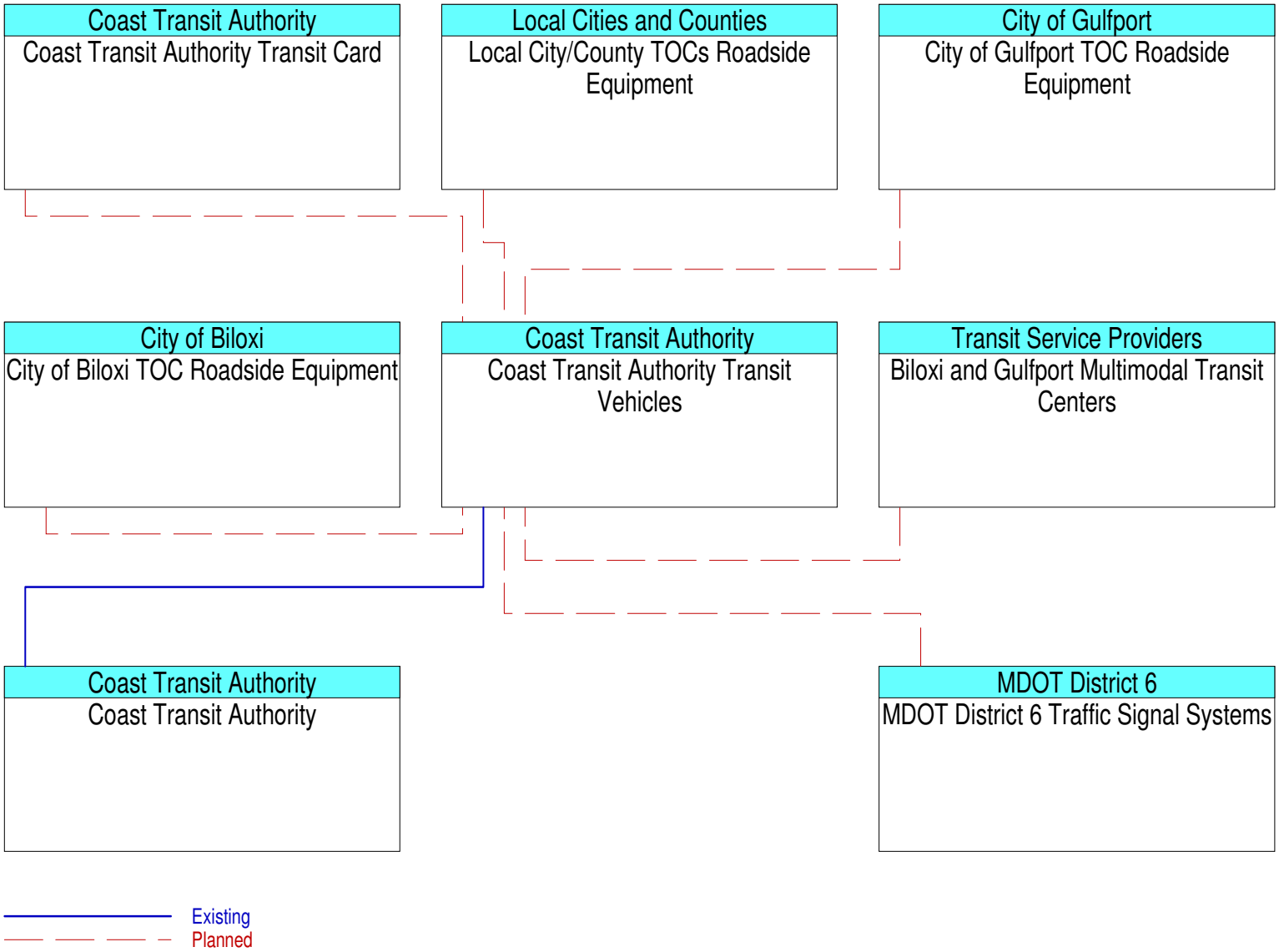
Coast Transit Authority
Coast Transit Authority Transit Card
Local Cities and Counties
Local City/County TOCs Roadside Equipment
City of Gulfport
City of Gulfport TOC Roadside Equipment
City of Biloxi
City of Biloxi TOC Roadside Equipment
Coast Transit Authority
Coast Transit Authority Transit Vehicles
Transit Service Providers
Biloxi and Gulfport Multimodal Transit Centers
Coast Transit Authority
Coast Transit Authority
MDOT District 6
MDOT District 6 Traffic Signal Systems
Existing
Planned

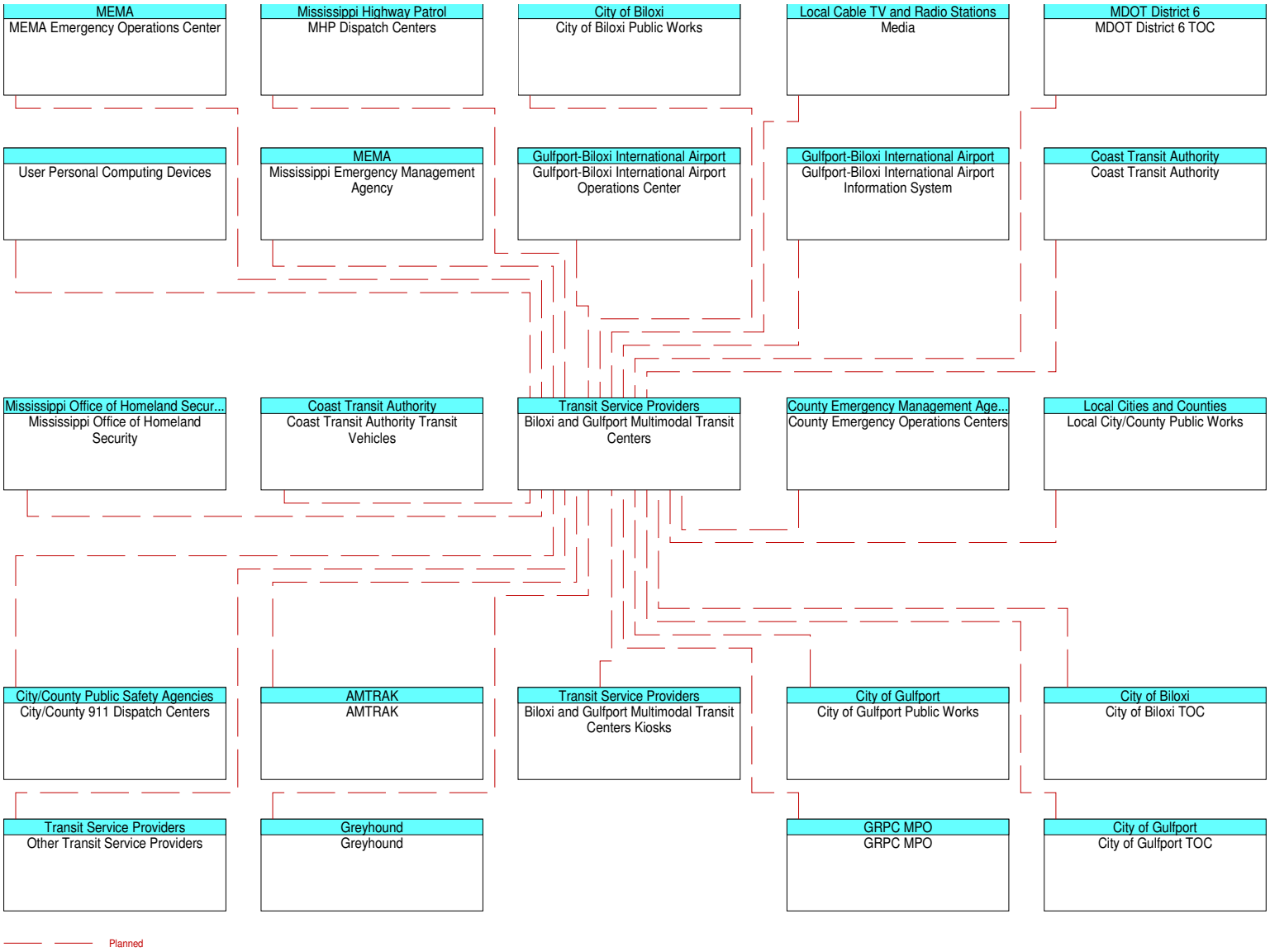
MEMA
MEMA Emergency Operations Center
Mississippi Highway Patrol
MHP Dispatch Centers
City of Biloxi
City of Biloxi Public Works
Local Cable TV and Radio Stations
Media
MDOT District 6
MDOT District 6 TOC
User Personal Computing Devices
MEMA
Mississippi Emergency Management Agency
Gulfport-Biloxi International Airport
Gulfport-Biloxi International Airport Operations Center
Gulfport-Biloxi International Airport
Gulfport-Biloxi International Airport Information System
Coast Transit Authority
Coast Transit Authority
Mississippi Office of Homeland Secur...
Mississippi Office of Homeland Security
Coast Transit Authority
Coast Transit Authority Transit Vehicles
Transit Service Providers
Biloxi and Gulfport Multimodal Transit Centers
County Emergency Management Age...
County Emergency Operations Centers
Local Cities and Counties
Local City/County Public Works
City/County Public Safety Agencies
City/County 911 Dispatch Centers
AMTRAK
AMTRAK
Transit Service Providers
Biloxi and Gulfport Multimodal Transit Centers Kiosks
City of Gulfport
City of Gulfport Public Works
City of Biloxi
City of Biloxi TOC
Transit Service Providers
Other Transit Service Providers
Greyhound
Greyhound
GRPC MPO
GRPC MPO
City of Gulfport
City of Gulfport TOC
Planned

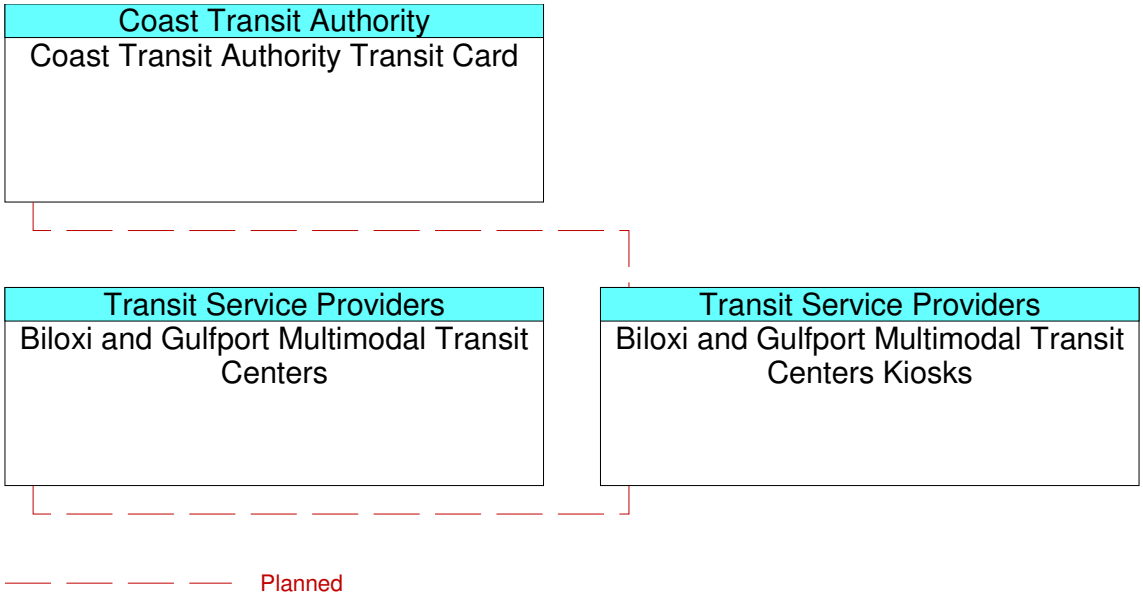
Coast Transit Authority
Coast Transit Authority Transit Card
Transit Service Providers
Biloxi and Gulfport Multimodal Transit Centers
Transit Service Providers
Biloxi and Gulfport Multimodal Transit Centers Kiosks
Planned

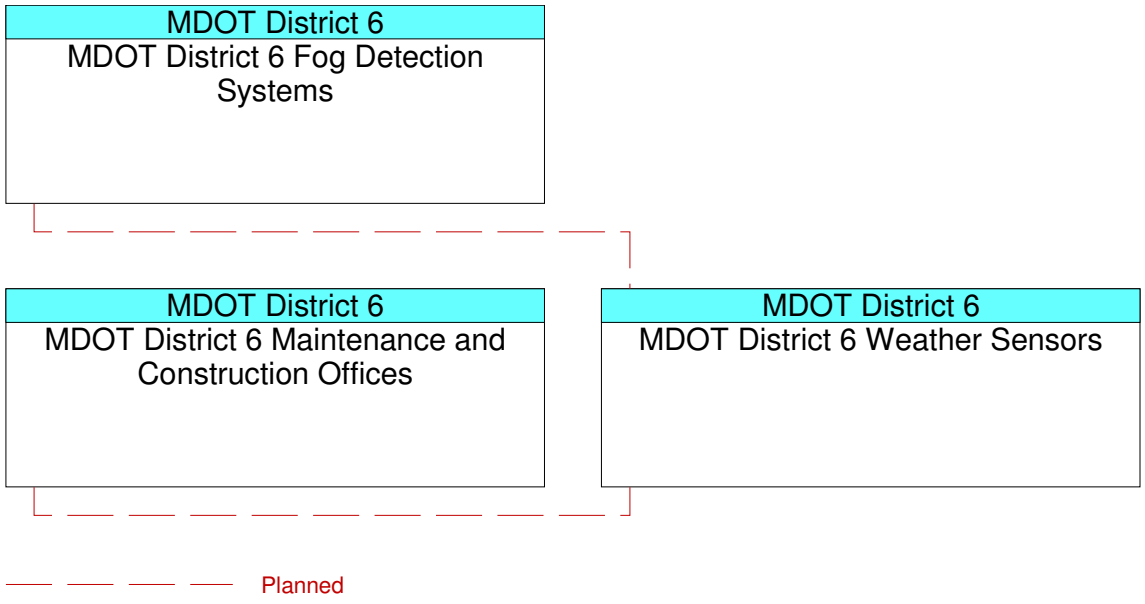
MDOT District 6
MDOT District 6 Fog Detection Systems
MDOT District 6
MDOT District 6 Maintenance and Construction Offices
MDOT District 6
MDOT District 6 Weather Sensors
Planned

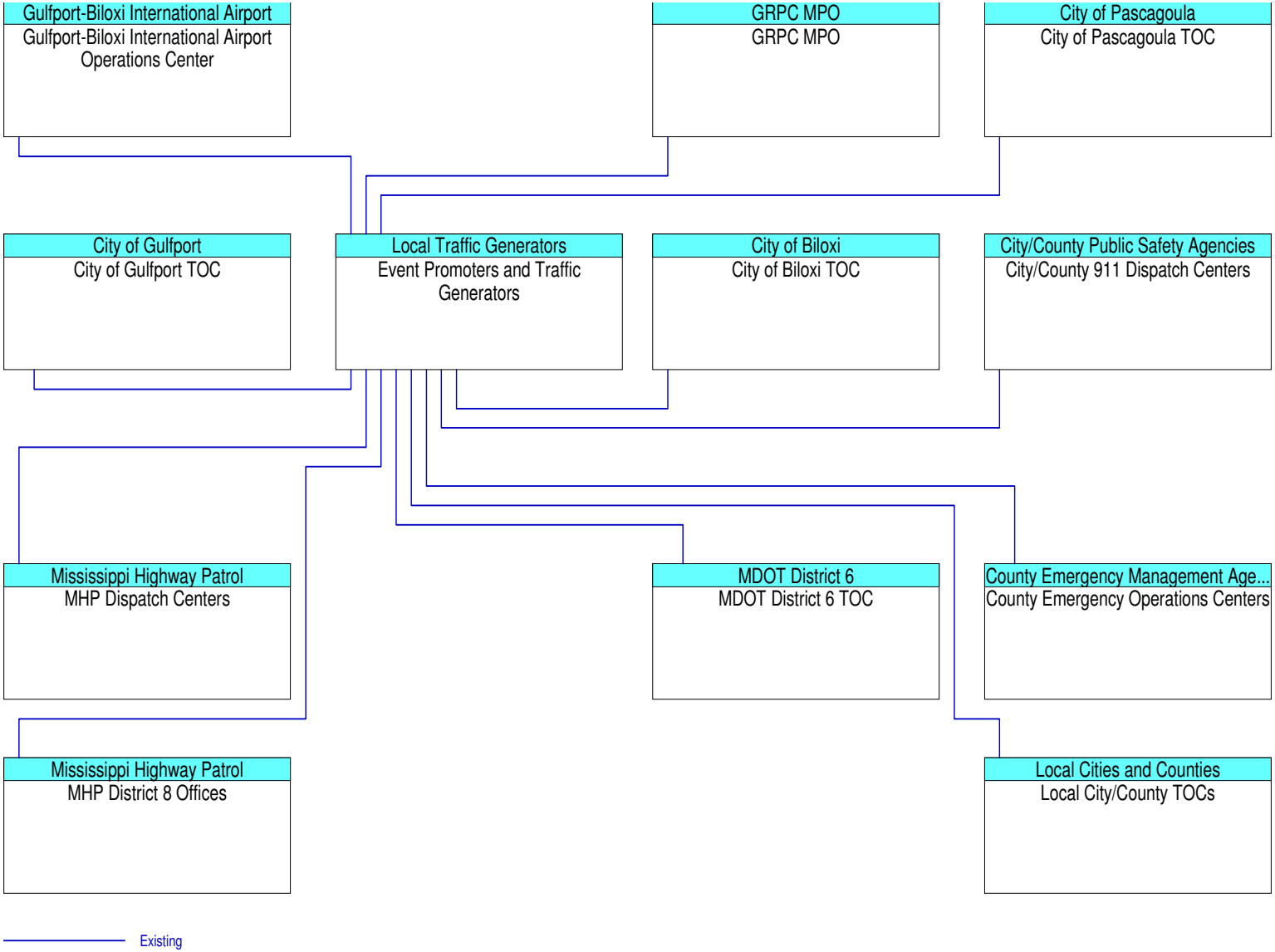
Gulfport-Biloxi International Airport
Gulfport-Biloxi International Airport Operations Center
GRPC MPO
GRPC MPO
City of Pascagoula
City of Pascagoula TOC
City of Gulfport
City of Gulfport TOC
Local Traffic Generators
Event Promoters and Traffic Generators
City of Biloxi
City of Biloxi TOC
City/County Public Safety Agencies
City/County 911 Dispatch Centers
Mississippi Highway Patrol
MHP Dispatch Centers
MDOT District 6
MDOT District 6 TOC
County Emergency Management Age...
County Emergency Operations Centers
Mississippi Highway Patrol
MHP District 8 Offices
Local Cities and Counties
Local City/County TOCs
Existing

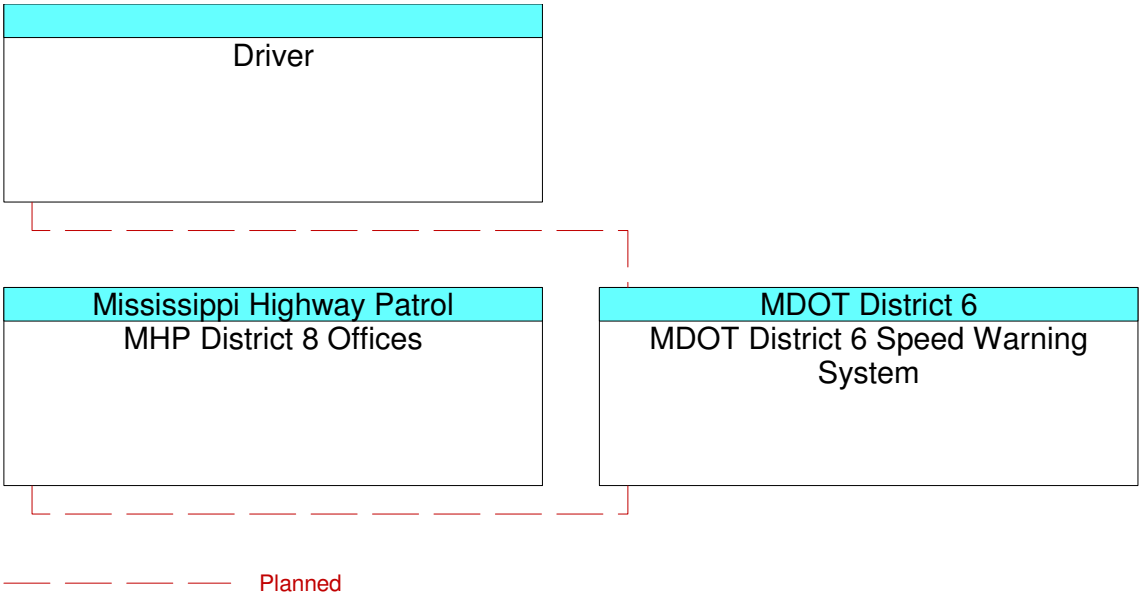
Driver
Mississippi Highway Patrol
MHP District 8 Offices
MDOT District 6
MDOT District 6 Speed Warning System
Planned

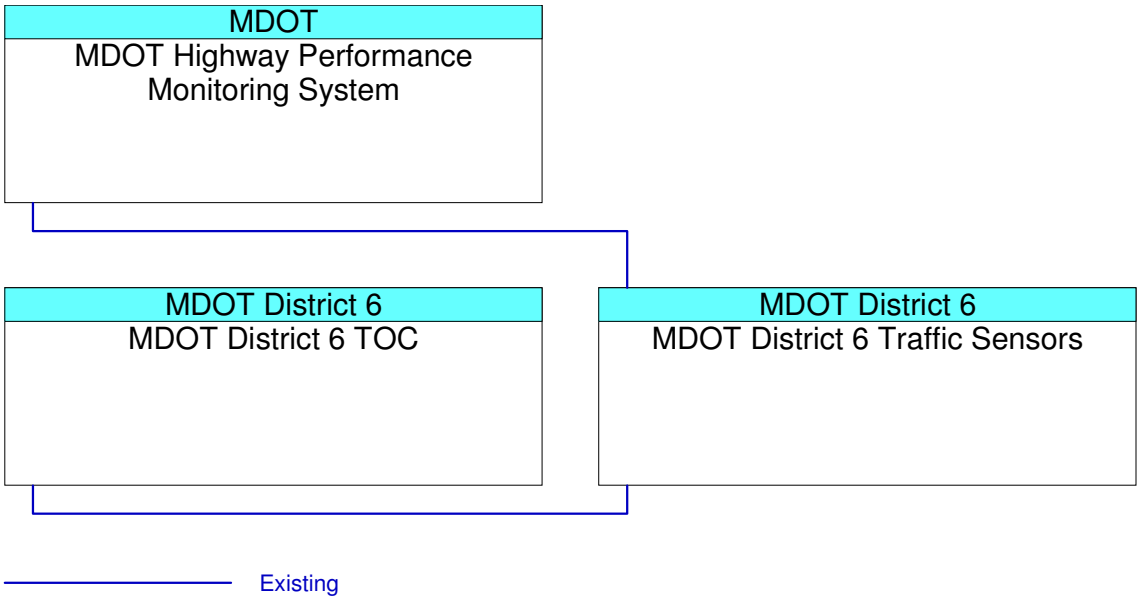
MDOT
MDOT Highway Performance Monitoring System
MDOT District 6
MDOT District 6 TOC
MDOT District 6
MDOT District 6 Traffic Sensors
Existing

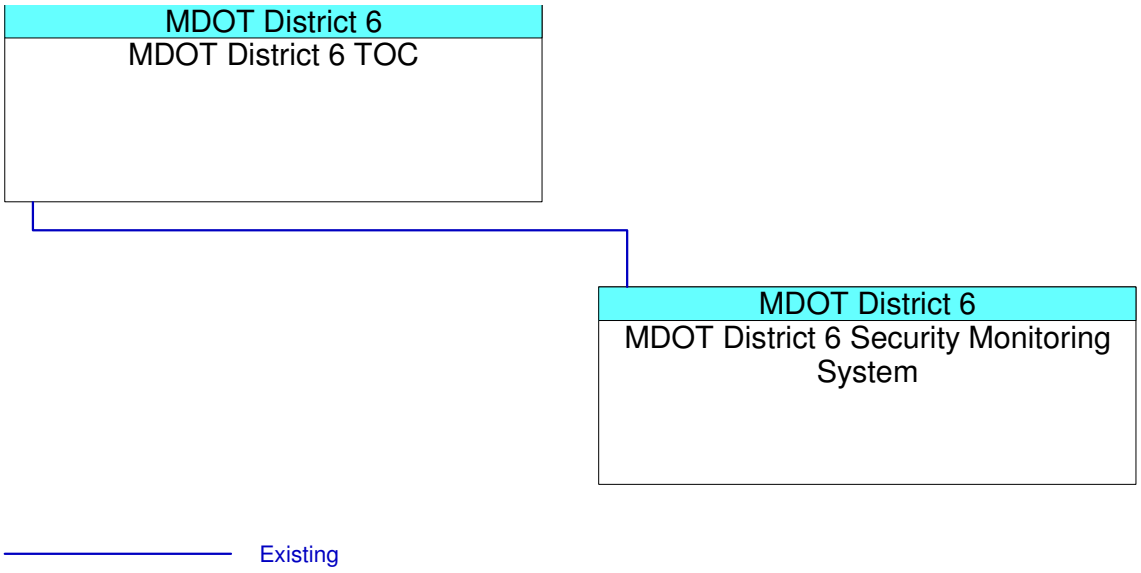
MDOT District 6
MDOT District 6 TOC
MDOT District 6
MDOT District 6 Security Monitoring System
Existing

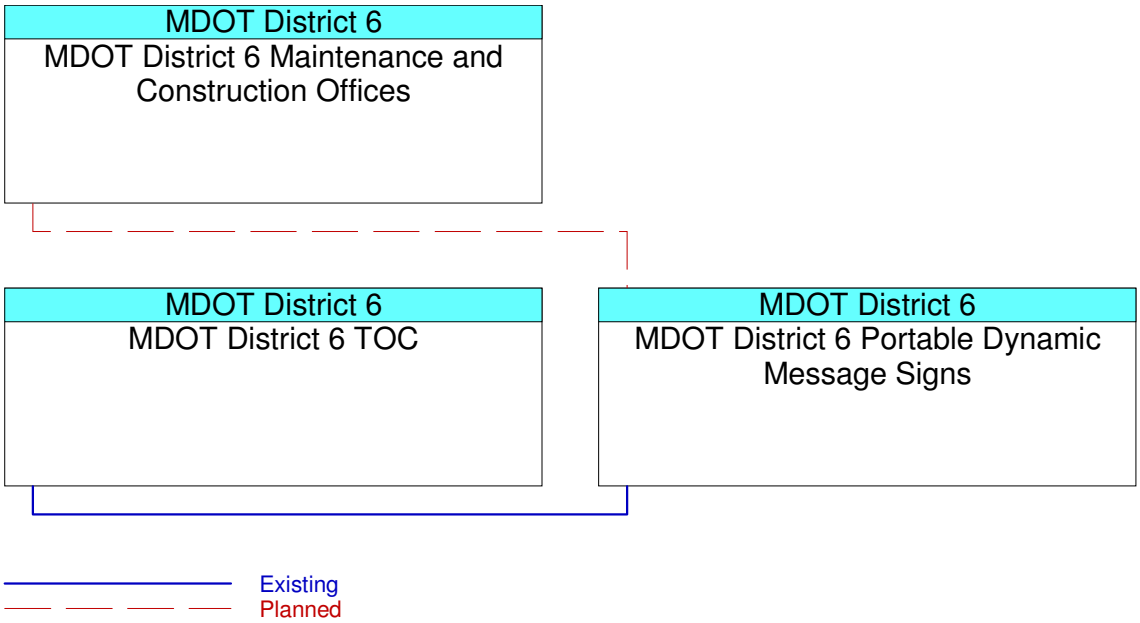
MDOT District 6
MDOT District 6 Maintenance and Construction Offices
MDOT District 6
MDOT District 6 TOC
MDOT District 6
MDOT District 6 Portable Dynamic Message Signs
Existing
Planned

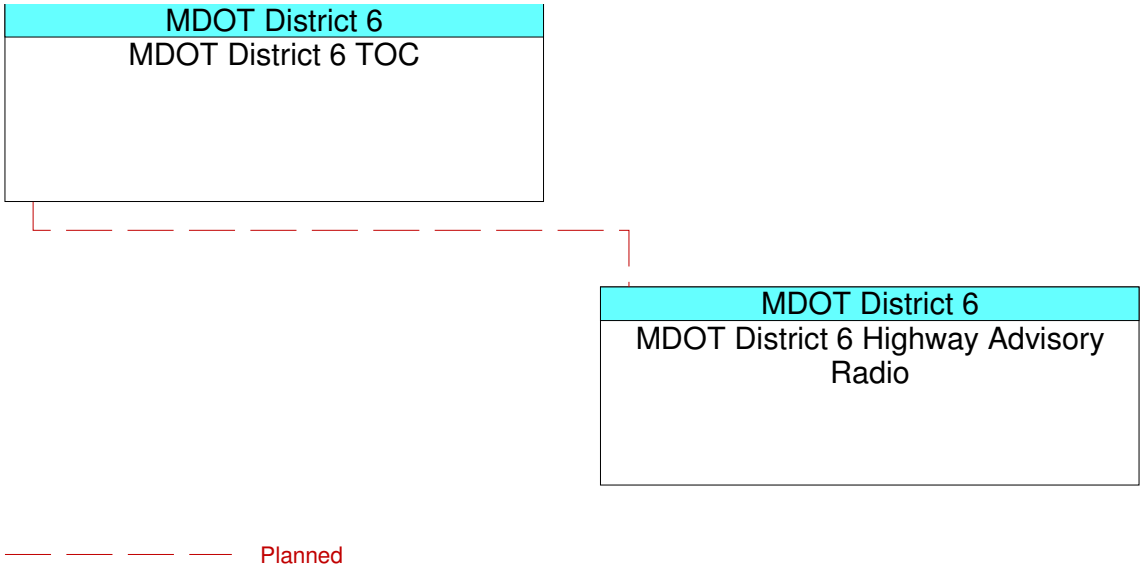
MDOT District 6
MDOT District 6 TOC
MDOT District 6
MDOT District 6 Highway Advisory Radio
Planned

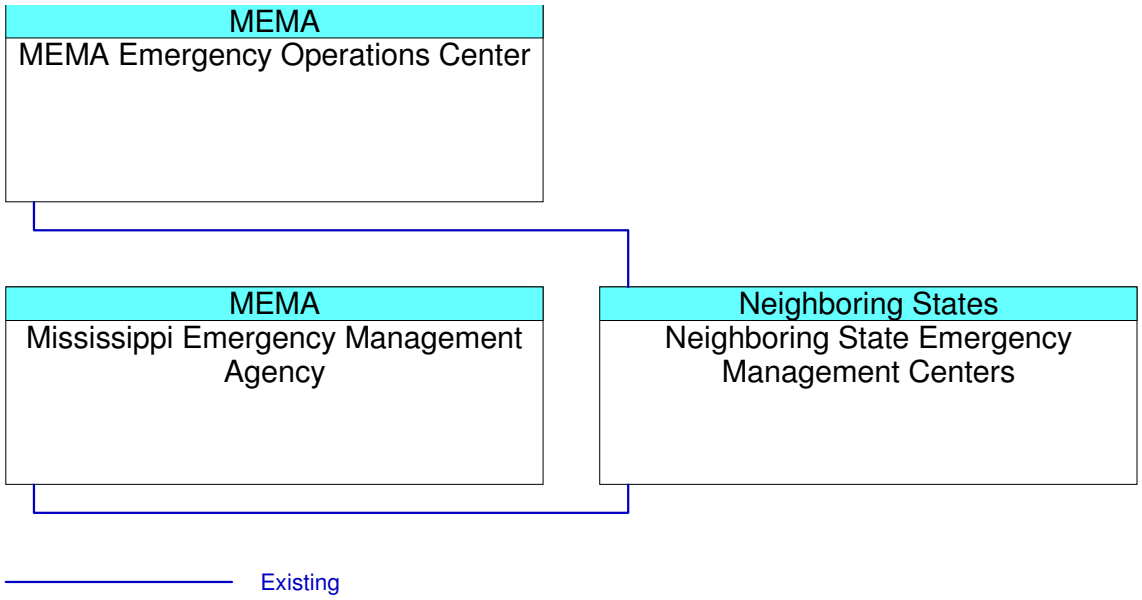
MEMA
MEMA Emergency Operations Center
MEMA
Mississippi Emergency Management Agency
Neighboring States
Neighboring State Emergency Management Centers
Existing

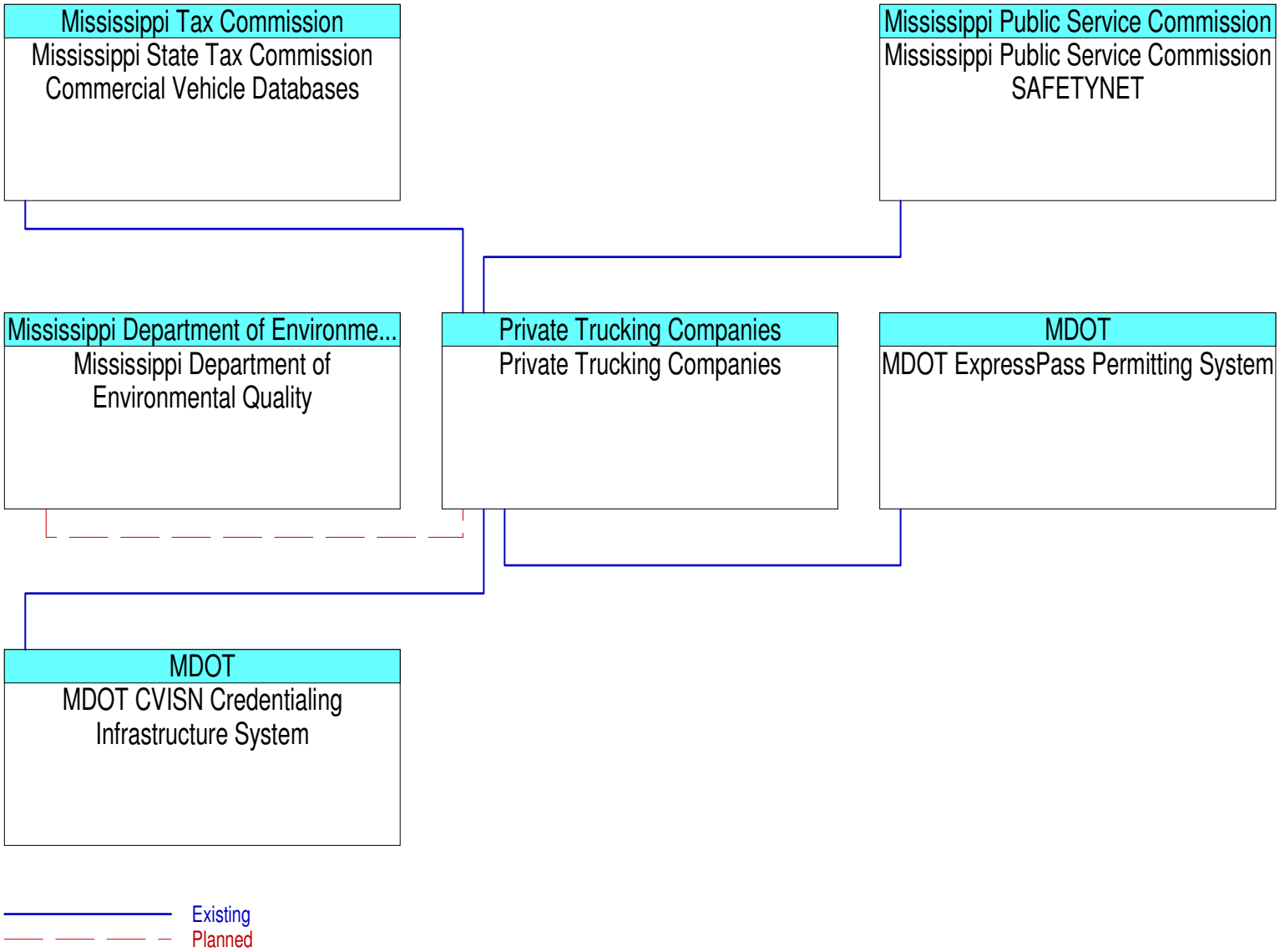
Mississippi Tax Commission
Mississippi State Tax Commission Commercial Vehicle Databases
Mississippi Public Service Commission
Mississippi Public Service Commission SAFETYNET
Mississippi Department of Environme...
Mississippi Department of Environmental Quality
Private Trucking Companies
Private Trucking Companies
MDOT
MDOT ExpressPass Permitting System
MDOT
MDOT CVISN Credentialing Infrastructure System
Existing
Planned

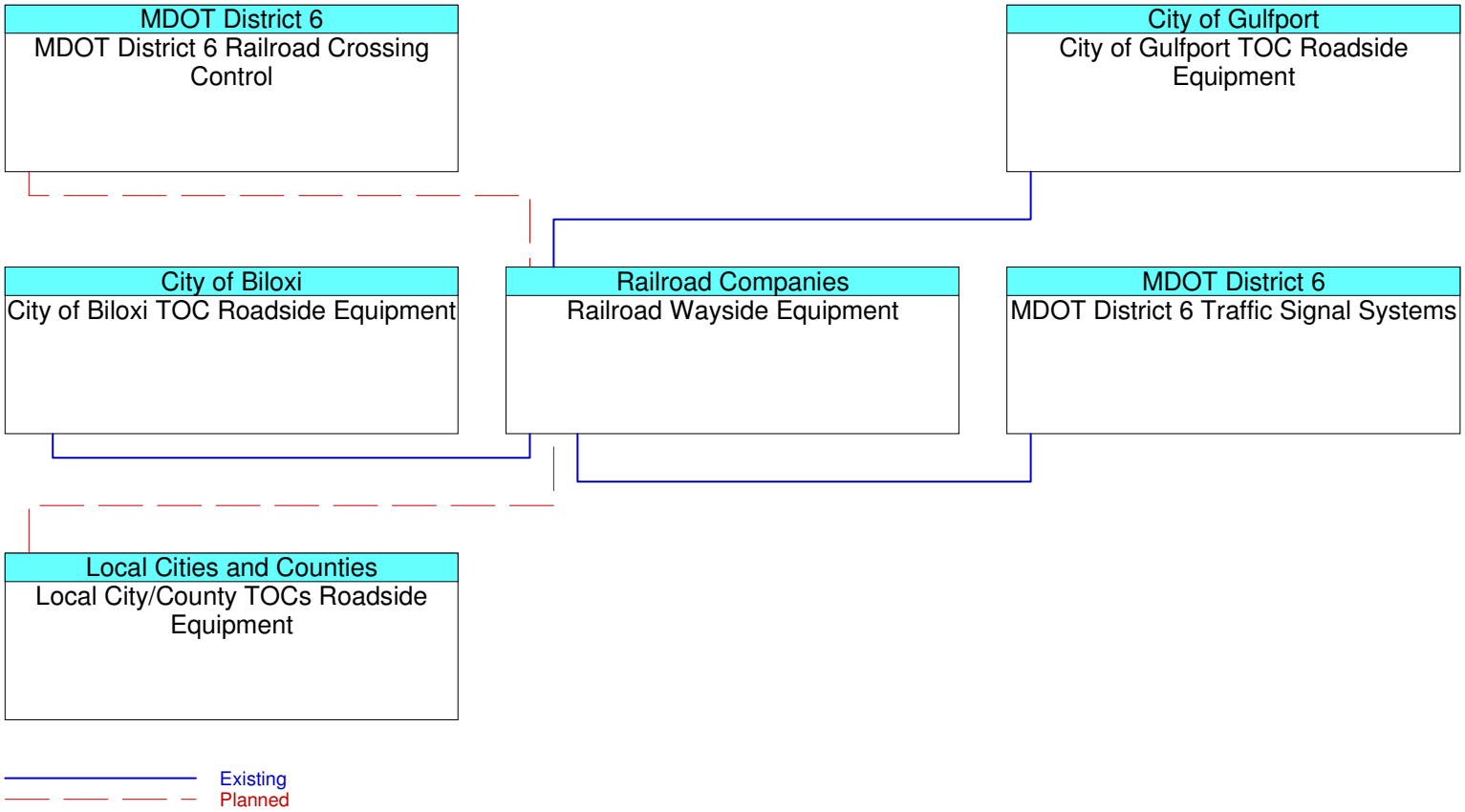
MDOT District 6
MDOT District 6 Railroad Crossing Control
City of Gulfport
City of Gulfport TOC Roadside Equipment
City of Biloxi
City of Biloxi TOC Roadside Equipment
Railroad Companies
Railroad Wayside Equipment
MDOT District 6
MDOT District 6 Traffic Signal Systems
Local Cities and Counties
Local City/County TOCs Roadside Equipment
Existing
Planned

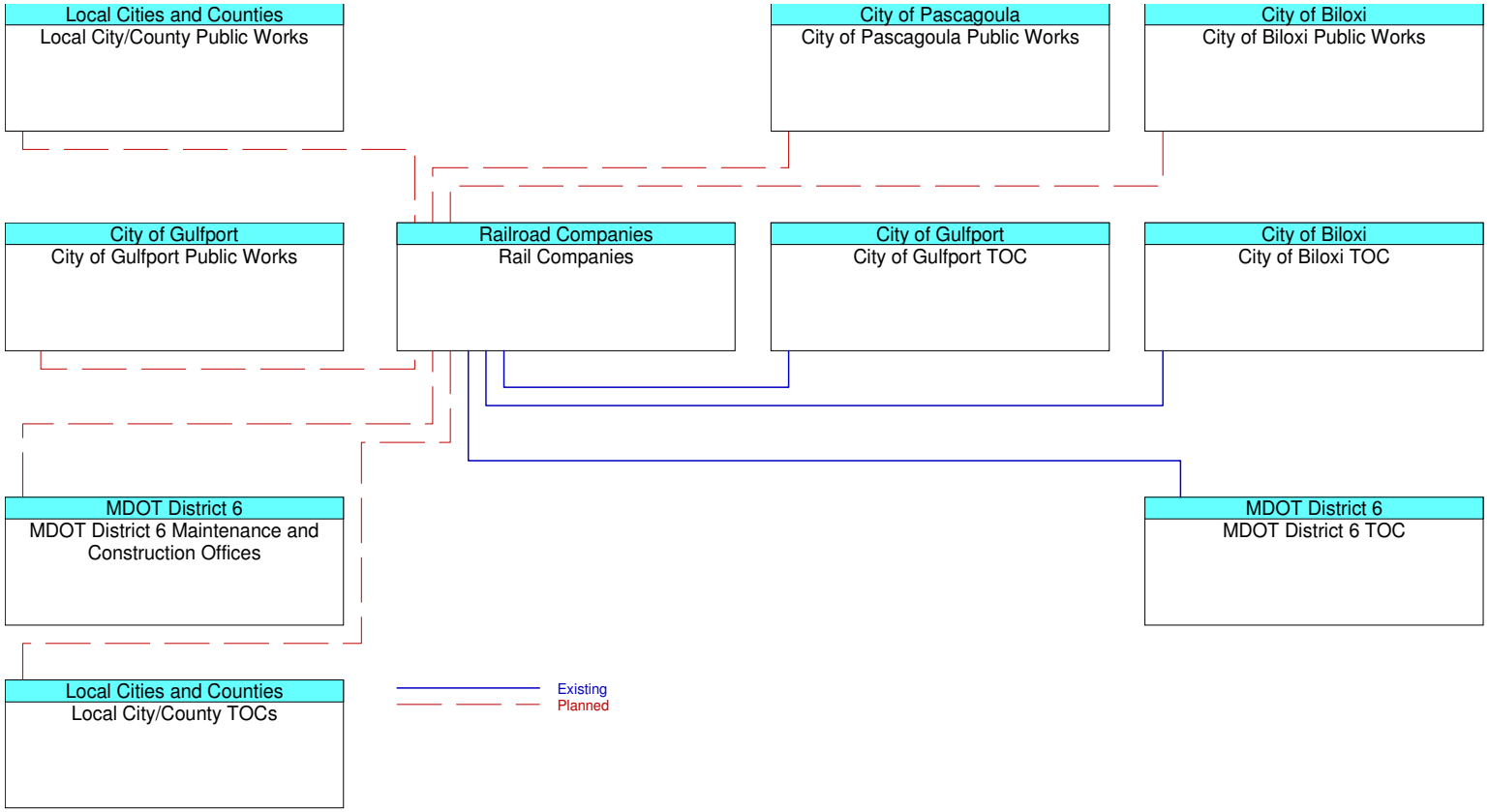
Local Cities and Counties
Local City/County Public Works
City of Pascagoula
City of Pascagoula Public Works
City of Biloxi
City of Biloxi Public Works
City of Gulfport
City of Gulfport Public Works
Railroad Companies
Rail Companies
City of Gulfport
City of Gulfport TOC
City of Biloxi
City of Biloxi TOC
MDOT District 6
MDOT District 6 Maintenance and Construction Offices
MDOT District 6
MDOT District 6 TOC
Local Cities and Counties
Local City/County TOCs
Existing
Planned

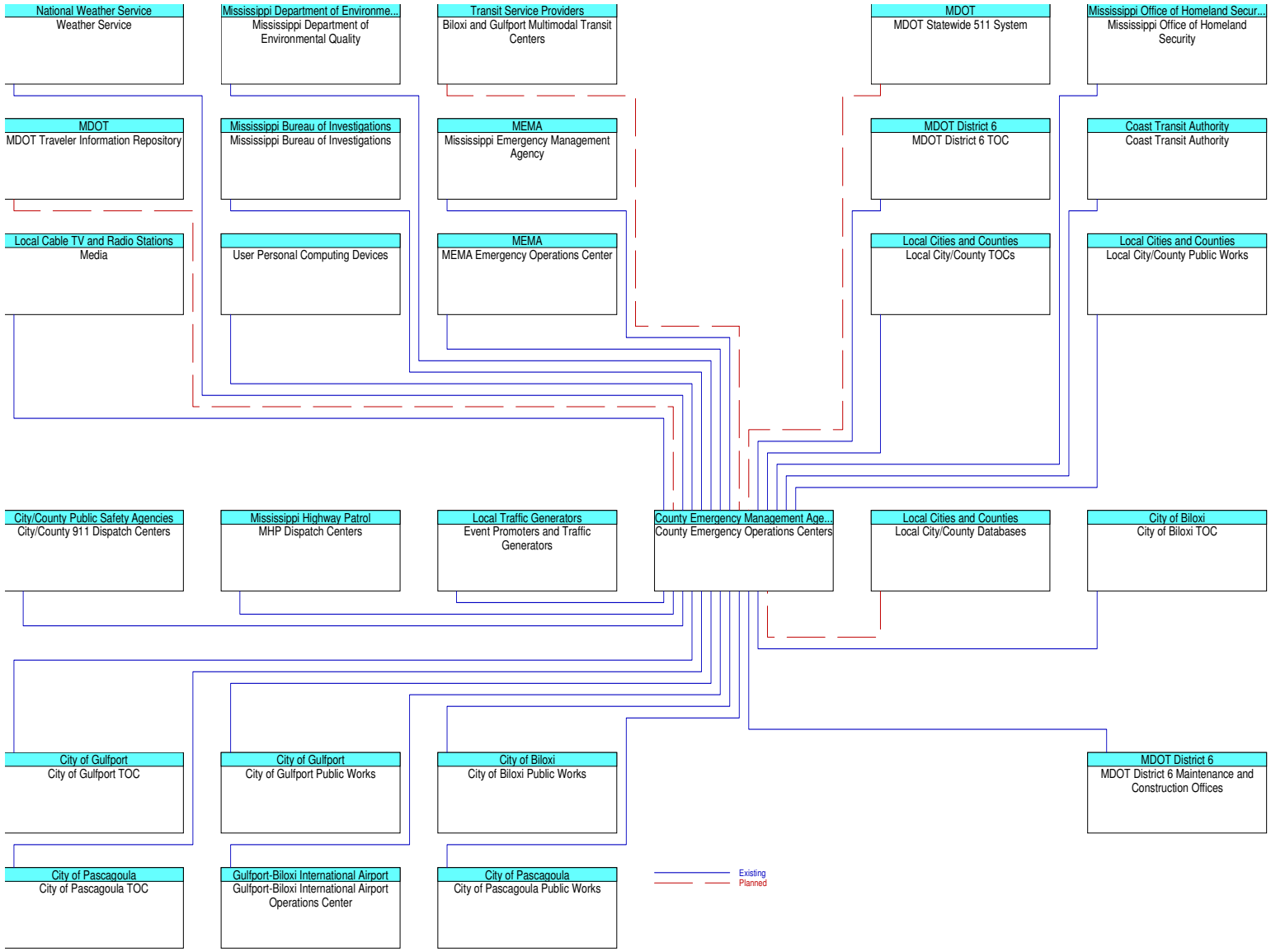
National Weather Service
Weather Service
Mississippi Department of Environme...
Mississippi Department of Environmental Quality
Transit Service Providers
Biloxi and Gulfport Multimodal Transit Centers
MDOT
MDOT Statewide 511 System
Mississippi Office of Homeland Secur...
Mississippi Office of Homeland Security
MDOT
MDOT Traveler Information Repository
Mississippi Bureau of Investigations
Mississippi Bureau of Investigations
MEMA
Mississippi Emergency Management Agency
MDOT District 6
MDOT District 6 TOC
Coast Transit Authority
Coast Transit Authority
Local Cable TV and Radio Stations
Media
User Personal Computing Devices
MEMA
MEMA Emergency Operations Center
Local Cities and Counties
Local City/County TOCs
Local Cities and Counties
Local City/County Public Works
City/County Public Safety Agencies
City/County 911 Dispatch Centers
Mississippi Highway Patrol
MHP Dispatch Centers
Local Traffic Generators
Event Promoters and Traffic Generators
County Emergency Management Age...
County Emergency Operations Centers
Local Cities and Counties
Local City/County Databases
City of Biloxi
City of Biloxi TOC
City of Gulfport
City of Gulfport TOC
City of Gulfport
City of Gulfport Public Works
City of Biloxi
City of Biloxi Public Works
MDOT District 6
MDOT District 6 Maintenance and Construction Offices
City of Pascagoula
City of Pascagoula TOC
Gulfport-Biloxi International Airport
Gulfport-Biloxi International Airport Operations Center
City of Pascagoula
City of Pascagoula Public Works
Existing
Planned

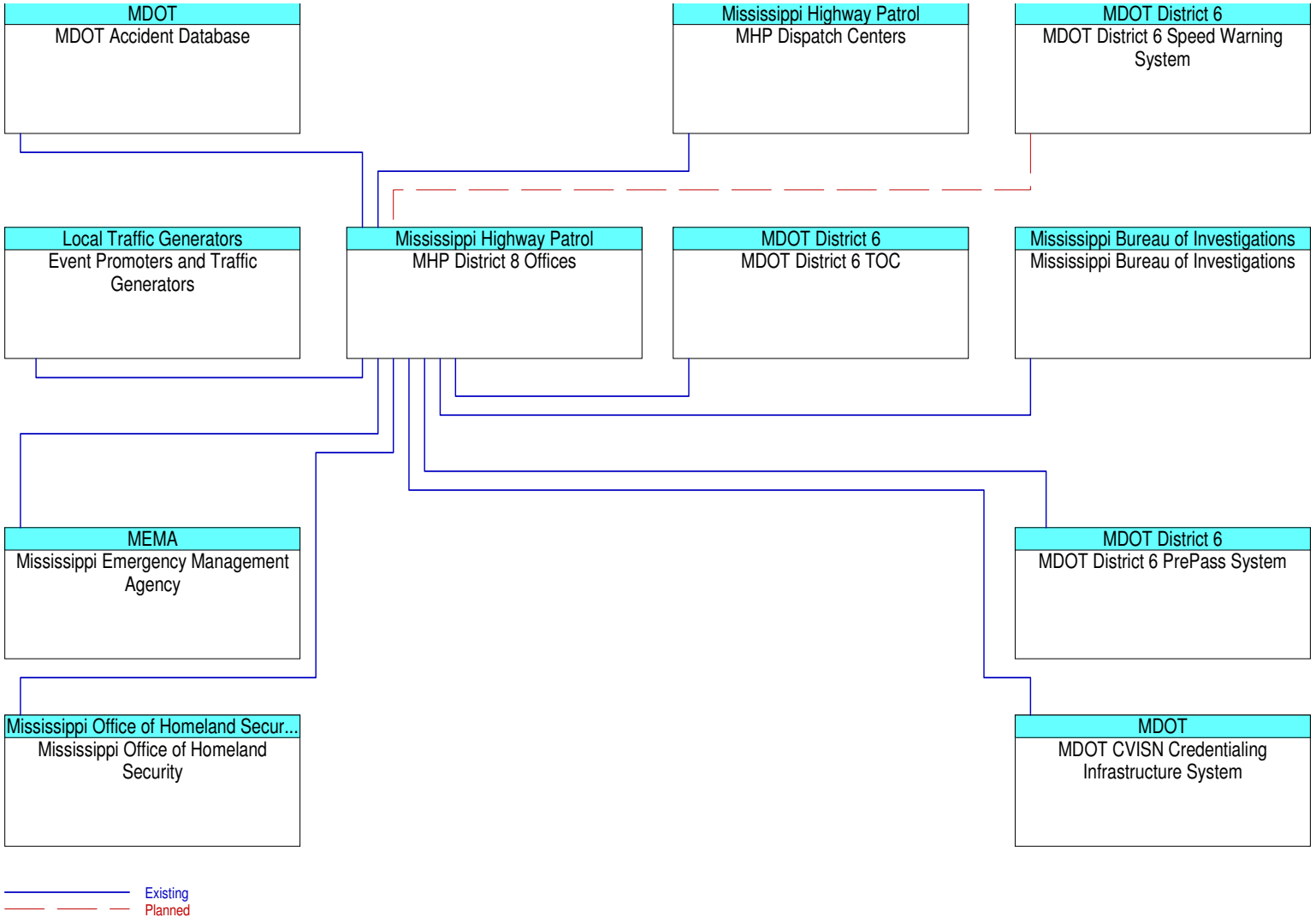
MDOT
MDOT Accident Database
Mississippi Highway Patrol
MHP Dispatch Centers
MDOT District 6
MDOT District 6 Speed Warning System
Local Traffic Generators
Event Promoters and Traffic Generators
Mississippi Highway Patrol
MHP District 8 Offices
MDOT District 6
MDOT District 6 TOC
Mississippi Bureau of Investigations
Mississippi Bureau of Investigations
MEMA
Mississippi Emergency Management Agency
MDOT District 6
MDOT District 6 PrePass System
Mississippi Office of Homeland Secur...
Mississippi Office of Homeland Security
MDOT
MDOT CVISN Credentialing Infrastructure System
Existing
Planned

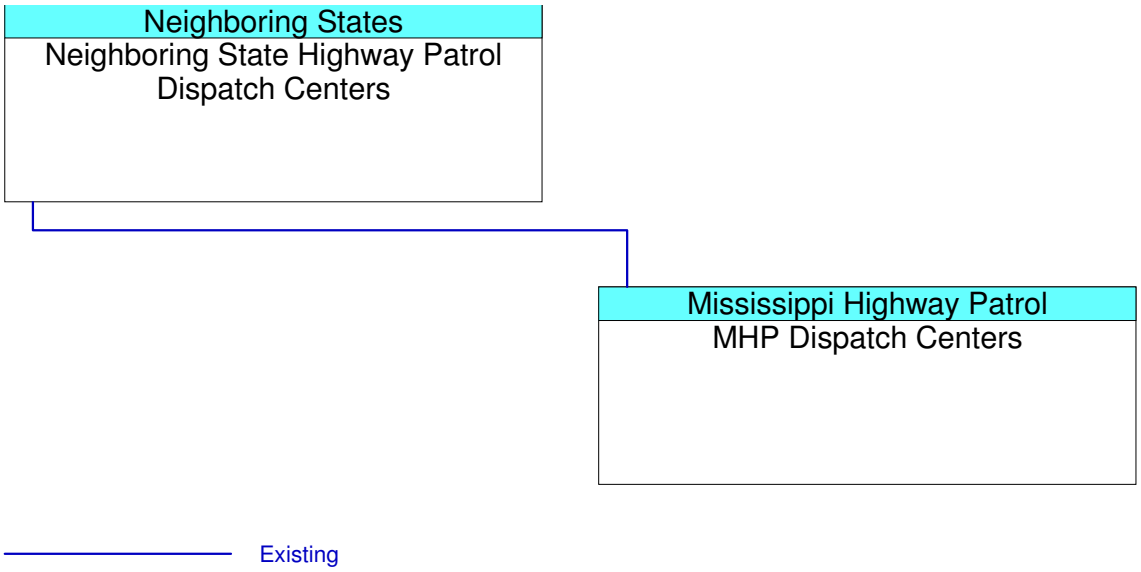
Neighboring States
Neighboring State Highway Patrol Dispatch Centers
Mississippi Highway Patrol
MHP Dispatch Centers
Existing

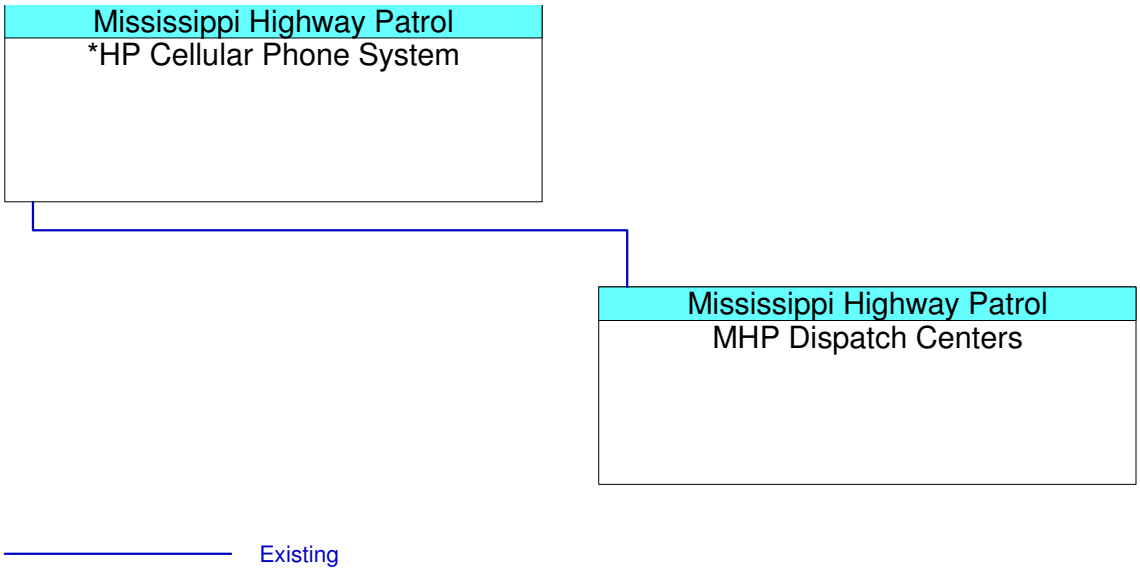
Mississippi Highway Patrol
*HP Cellular Phone System
Mississippi Highway Patrol
MHP Dispatch Centers
Existing

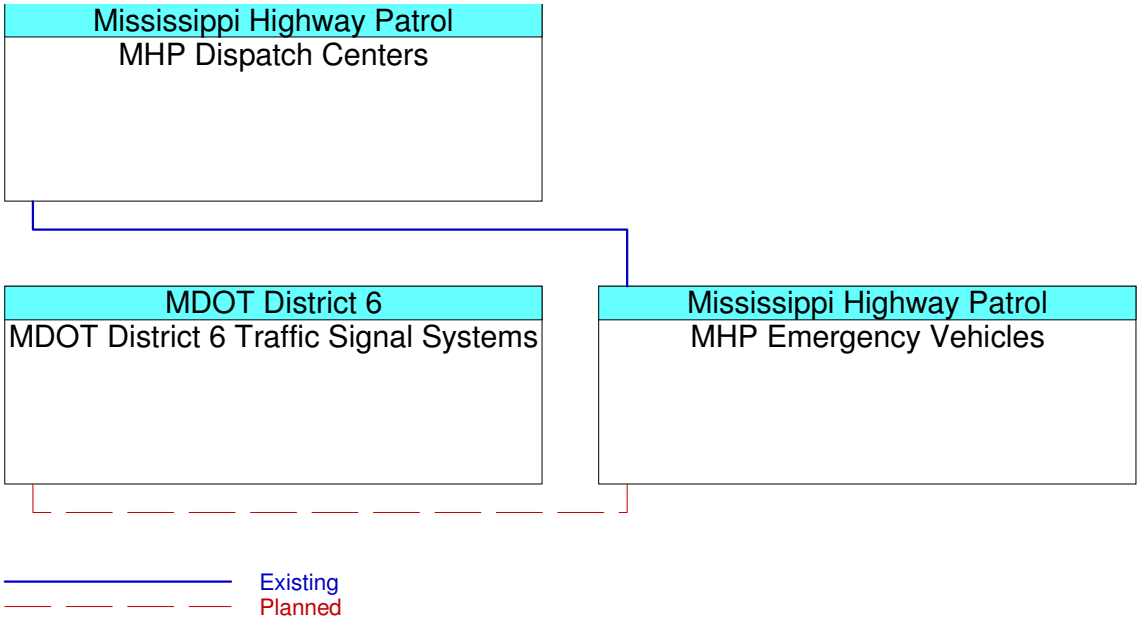
Mississippi Highway Patrol
MHP Dispatch Centers
MDOT District 6
MDOT District 6 Traffic Signal Systems
Mississippi Highway Patrol
MHP Emergency Vehicles
Existing
Planned

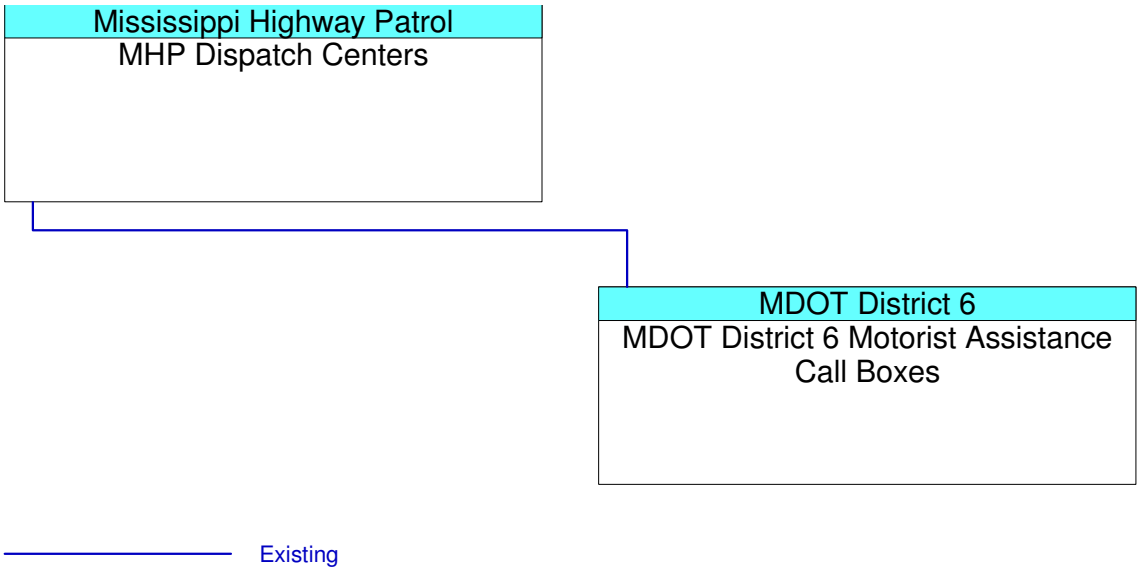
Mississippi Highway Patrol
MHP Dispatch Centers
MDOT District 6
MDOT District 6 Motorist Assistance Call Boxes
Existing

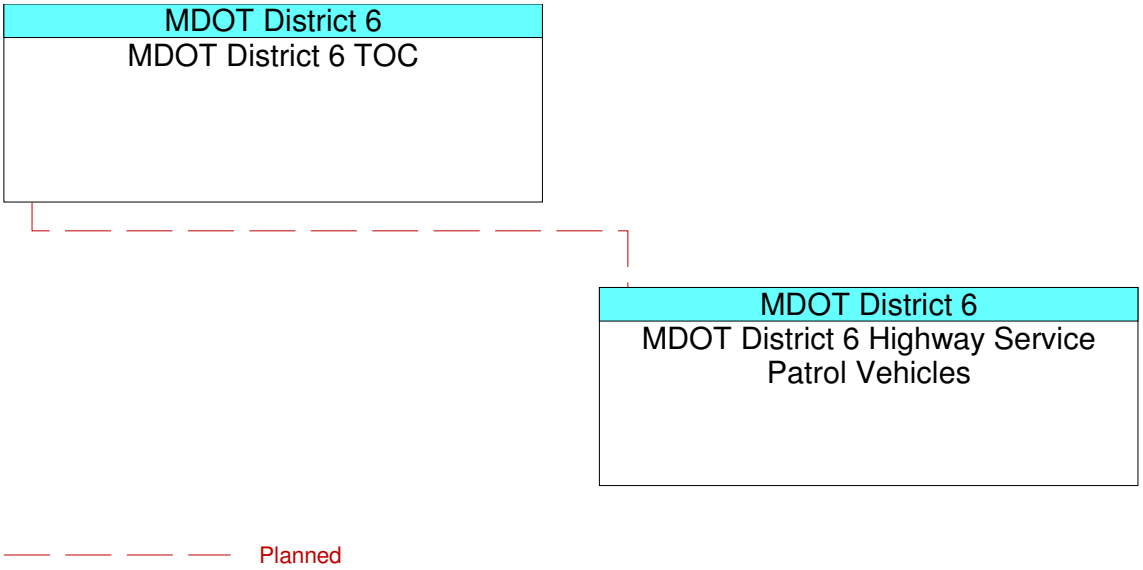
MDOT District 6
MDOT District 6 TOC
MDOT District 6
MDOT District 6 Highway Service Patrol Vehicles
Planned

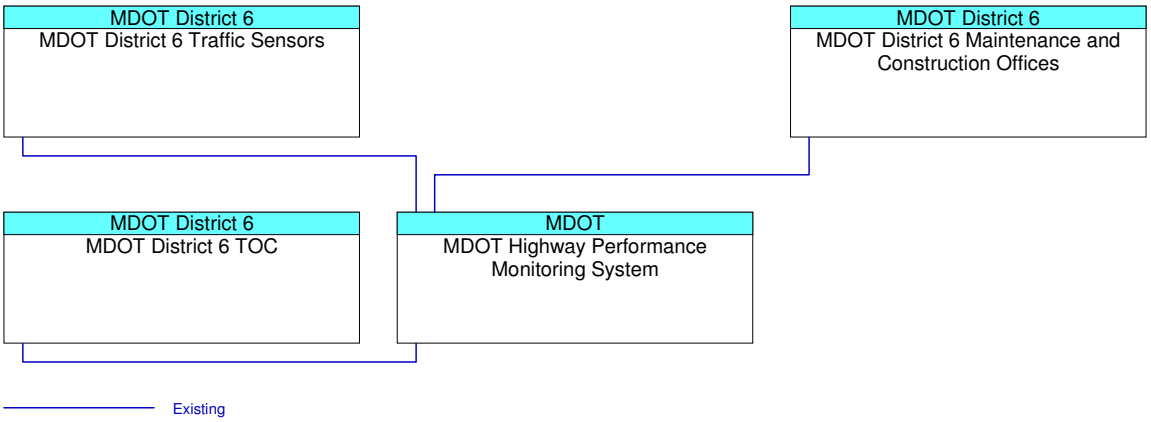
MDOT District 6
MDOT District 6 Traffic Sensors
MDOT District 6
MDOT District 6 Maintenance and Construction Offices
MDOT District 6
MDOT District 6 TOC
MDOT
MDOT Highway Performance Monitoring System
Existing

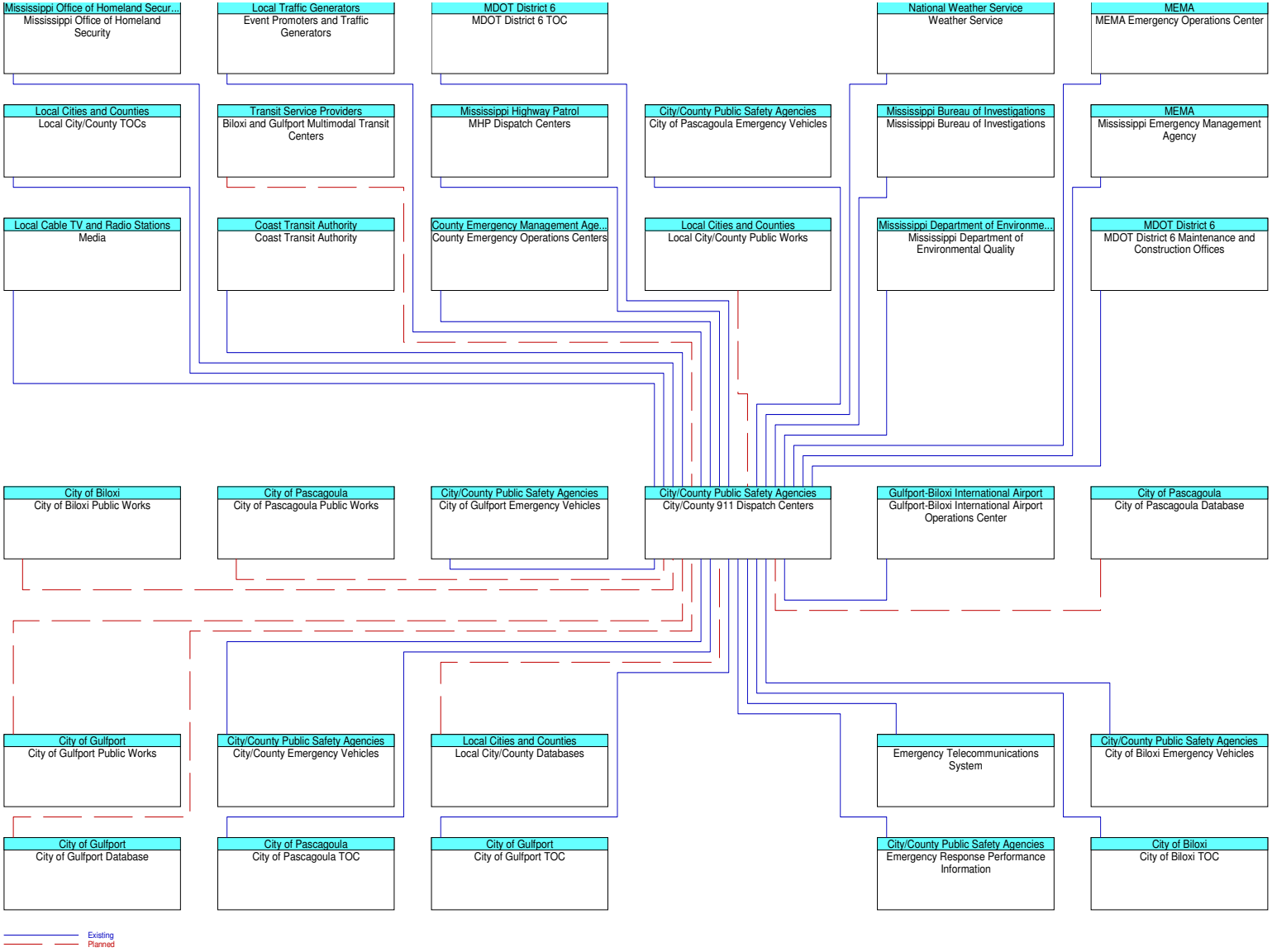
Mississippi Office of Homeland Secur...
Mississippi Office of Homeland Security
Local Traffic Generators
Event Promoters and Traffic Generators
MDOT District 6
MDOT District 6 TOC
National Weather Service
Weather Service
MEMA
MEMA Emergency Operations Center
Local Cities and Counties
Local City/County TOCs
Transit Service Providers
Biloxi and Gulfport Multimodal Transit Centers
Mississippi Highway Patrol
MHP Dispatch Centers
City/County Public Safety Agencies
City of Pascagoula Emergency Vehicles
Mississippi Bureau of Investigations
Mississippi Bureau of Investigations
MEMA
Mississippi Emergency Management Agency
Local Cable TV and Radio Stations
Media
Coast Transit Authority
Coast Transit Authority
County Emergency Management Age...
County Emergency Operations Centers
Local Cities and Counties
Local City/County Public Works
Mississippi Department of Environme...
Mississippi Department of Environmental Quality
MDOT District 6
MDOT District 6 Maintenance and Construction Offices
City of Biloxi
City of Biloxi Public Works
City of Pascagoula
City of Pascagoula Public Works
City/County Public Safety Agencies
City of Gulfport Emergency Vehicles
City/County Public Safety Agencies
City/County 911 Dispatch Centers
Gulfport-Biloxi International Airport
Gulfport-Biloxi International Airport Operations Center
City of Pascagoula
City of Pascagoula Database
City of Gulfport
City of Gulfport Public Works
City/County Public Safety Agencies
City/County Emergency Vehicles
Local Cities and Counties
Local City/County Databases
Emergency Telecommunications System
City/County Public Safety Agencies
City of Biloxi Emergency Vehicles
City of Gulfport
City of Gulfport Database
City of Pascagoula
City of Pascagoula TOC
City of Gulfport
City of Gulfport TOC
City/County Public Safety Agencies
Emergency Response Performance Information
City of Biloxi
City of Biloxi TOC
Existing
Planned

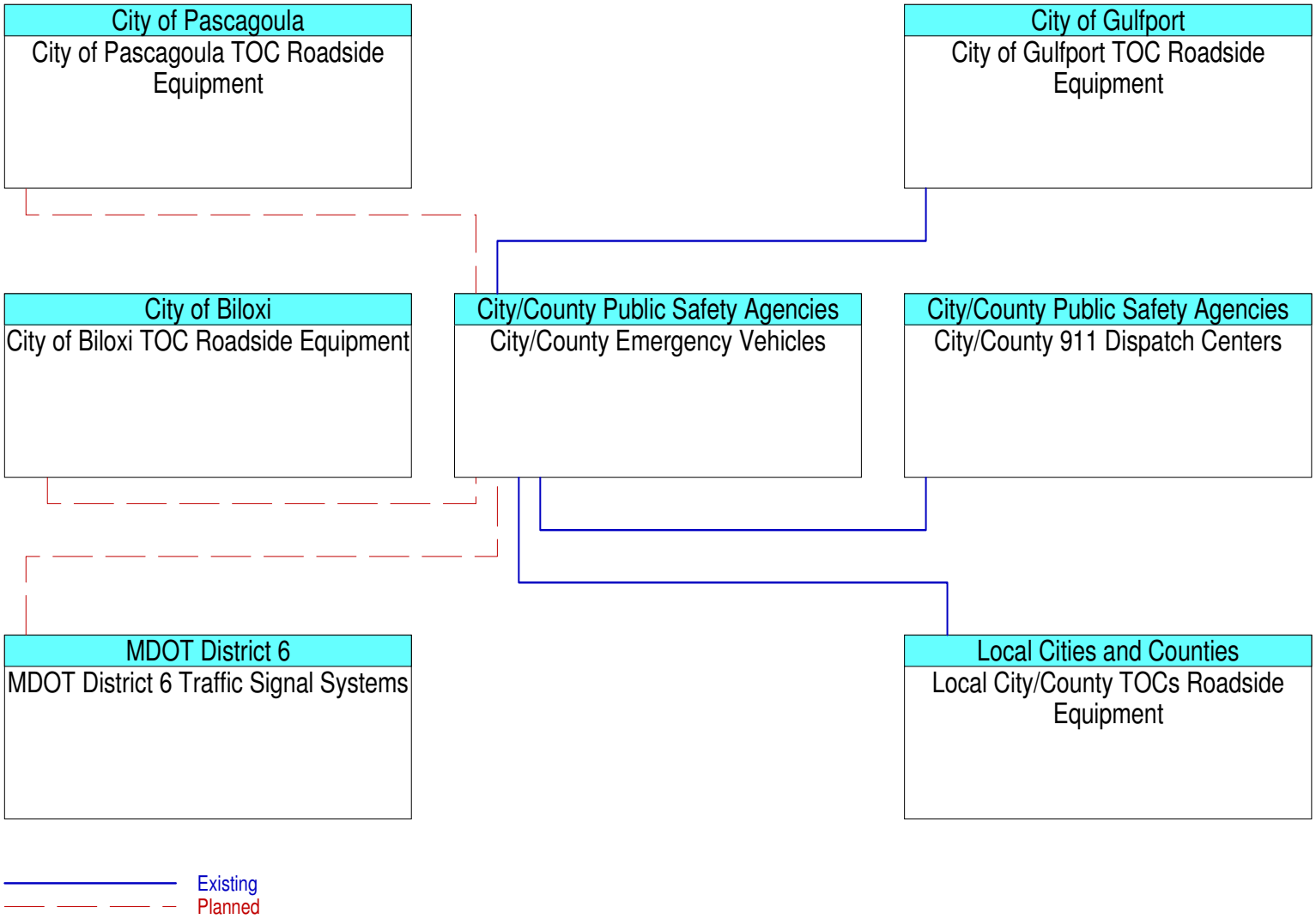
City of Pascagoula
City of Pascagoula TOC Roadside Equipment
City of Gulfport
City of Gulfport TOC Roadside Equipment
City of Biloxi
City of Biloxi TOC Roadside Equipment
City/County Public Safety Agencies
City/County Emergency Vehicles
City/County Public Safety Agencies
City/County 911 Dispatch Centers
MDOT District 6
MDOT District 6 Traffic Signal Systems
Local Cities and Counties
Local City/County TOCs Roadside Equipment
Existing
Planned

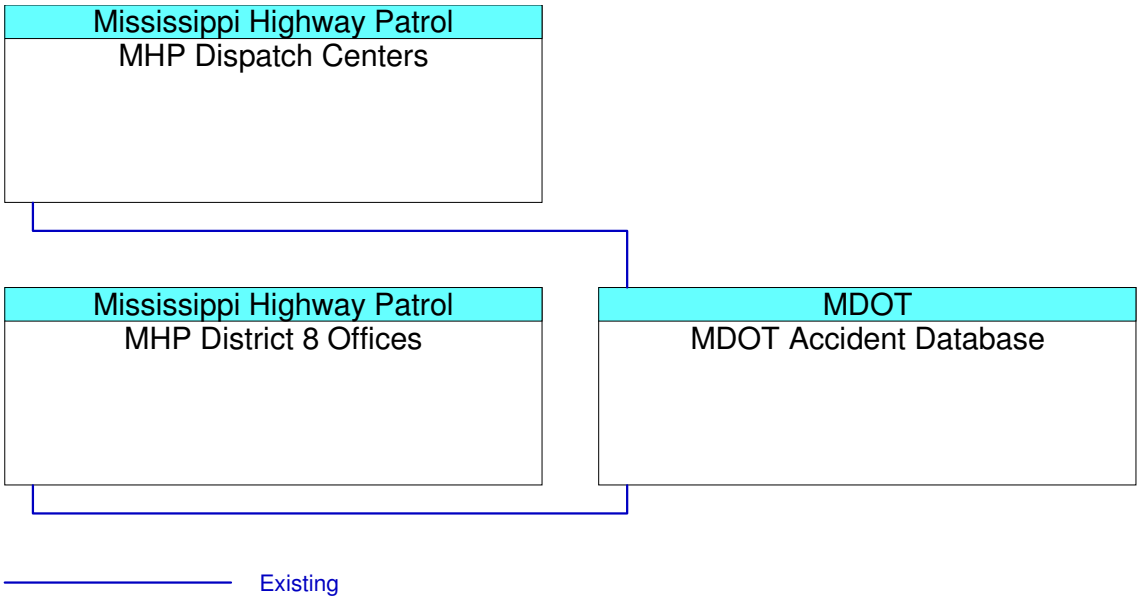
Mississippi Highway Patrol
MHP Dispatch Centers
Mississippi Highway Patrol
MHP District 8 Offices
MDOT
MDOT Accident Database
Existing

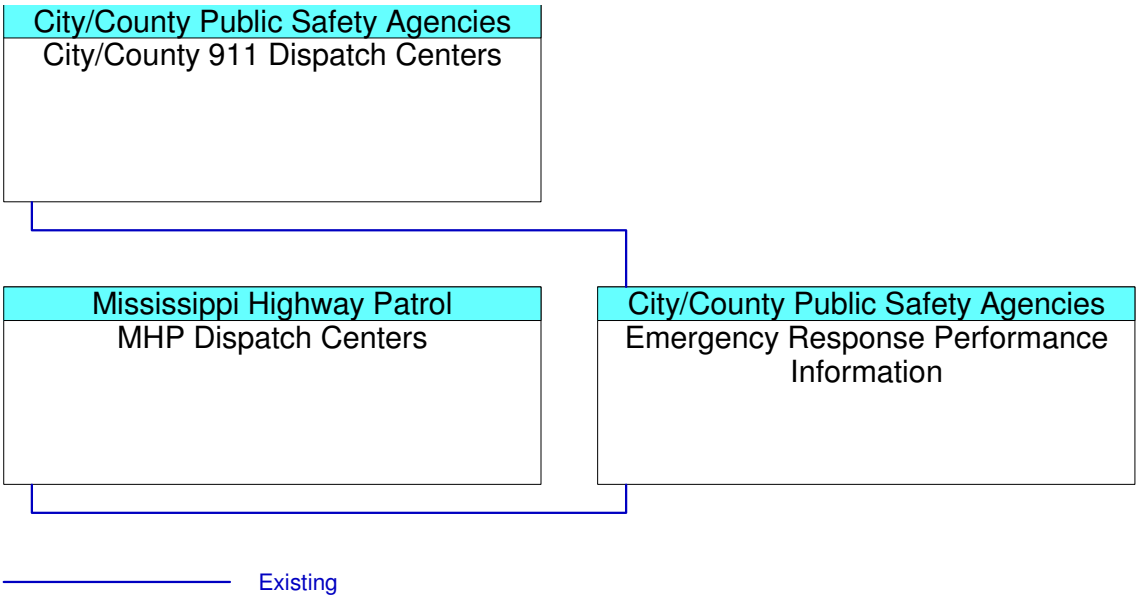
City/County Public Safety Agencies
City/County 911 Dispatch Centers
Mississippi Highway Patrol
MHP Dispatch Centers
City/County Public Safety Agencies
Emergency Response Performance Information
Existing

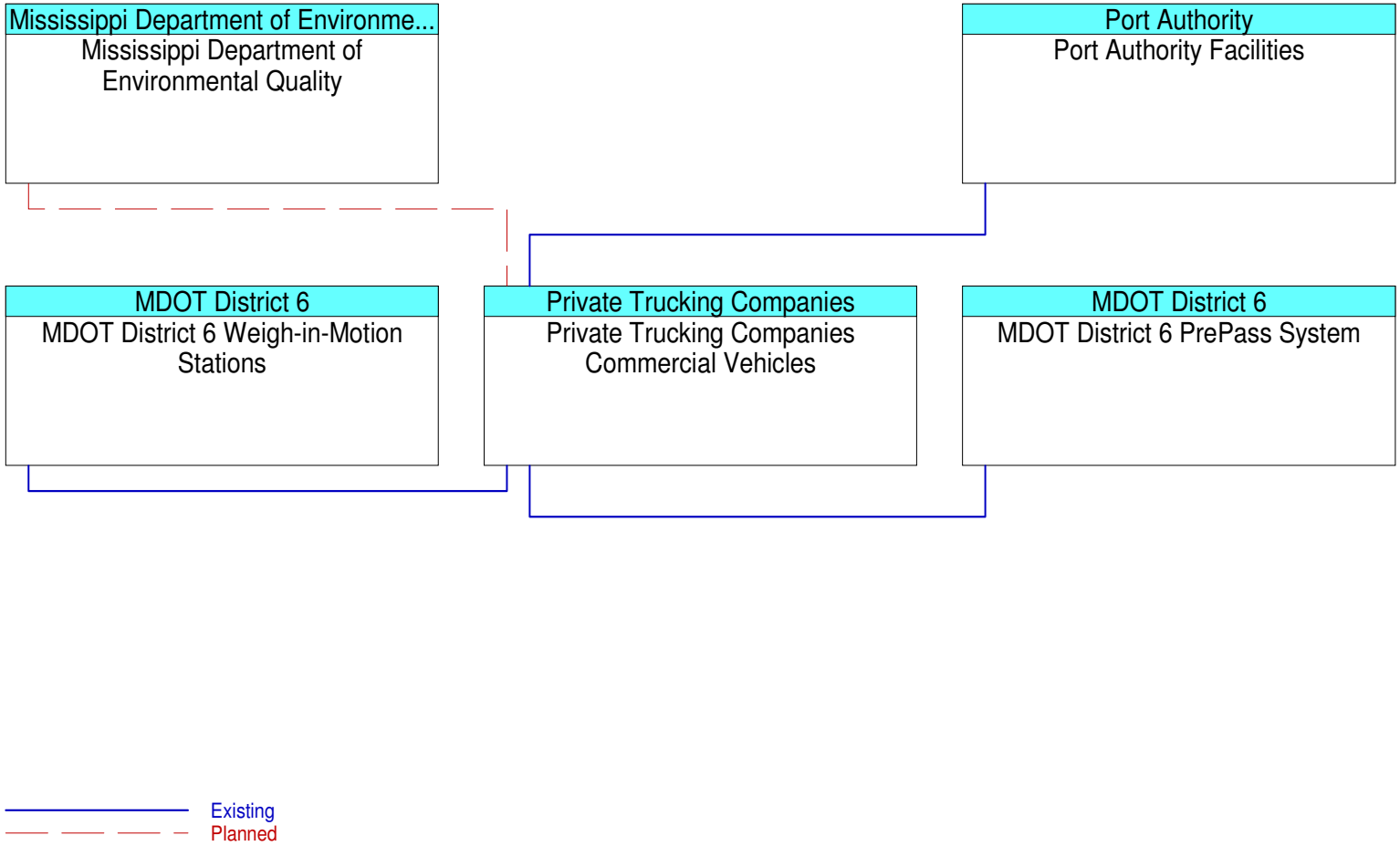
Mississippi Department of Environme...
Mississippi Department of Environmental Quality
Port Authority
Port Authority Facilities
MDOT District 6
MDOT District 6 Weigh-in-Motion Stations
Private Trucking Companies
Private Trucking Companies Commercial Vehicles
MDOT District 6
MDOT District 6 PrePass System
Existing
Planned

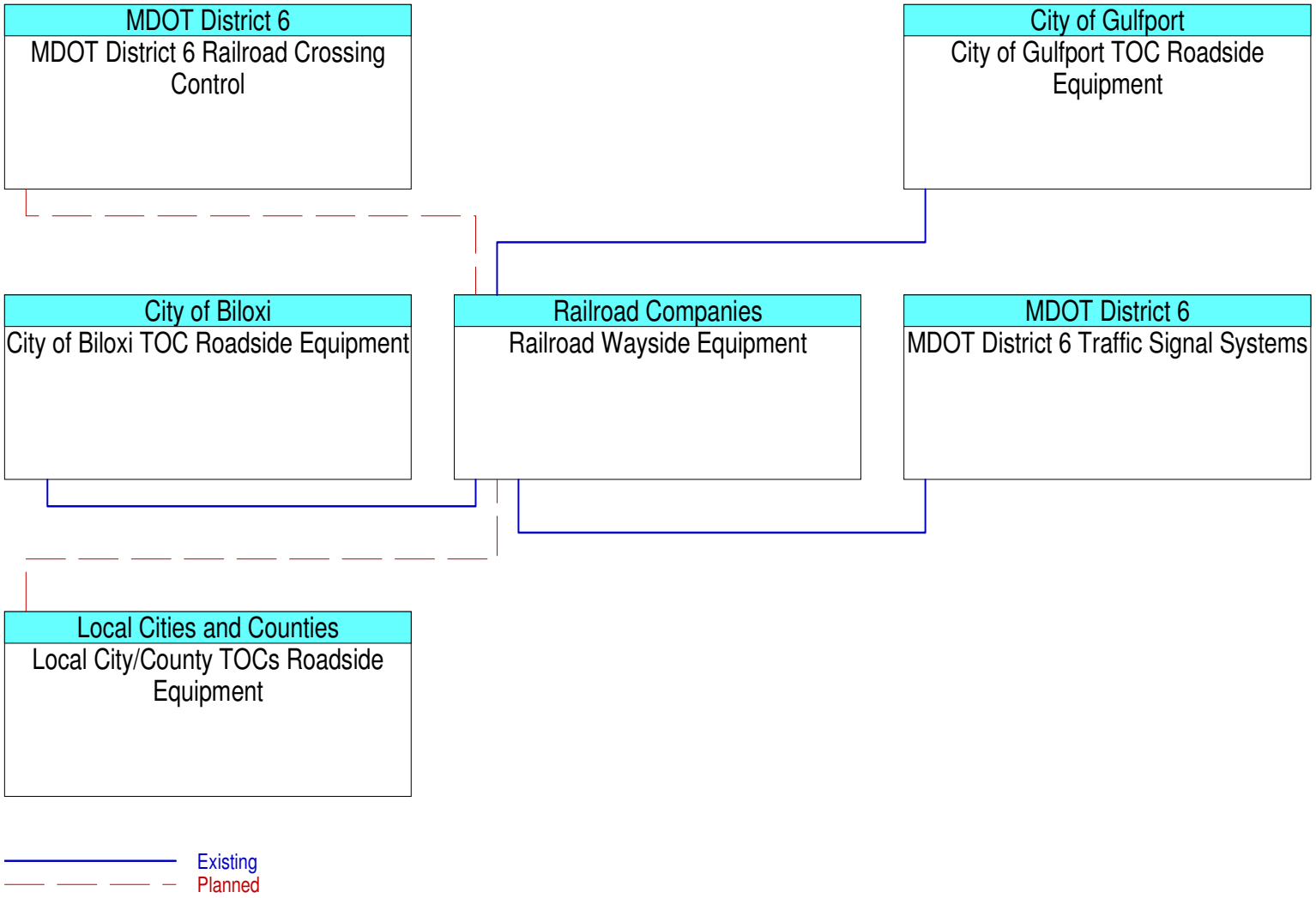
MDOT District 6
MDOT District 6 Railroad Crossing Control
City of Gulfport
City of Gulfport TOC Roadside Equipment
City of Biloxi
City of Biloxi TOC Roadside Equipment
Railroad Companies
Railroad Wayside Equipment
MDOT District 6
MDOT District 6 Traffic Signal Systems
Local Cities and Counties
Local City/County TOCs Roadside Equipment
Existing
Planned

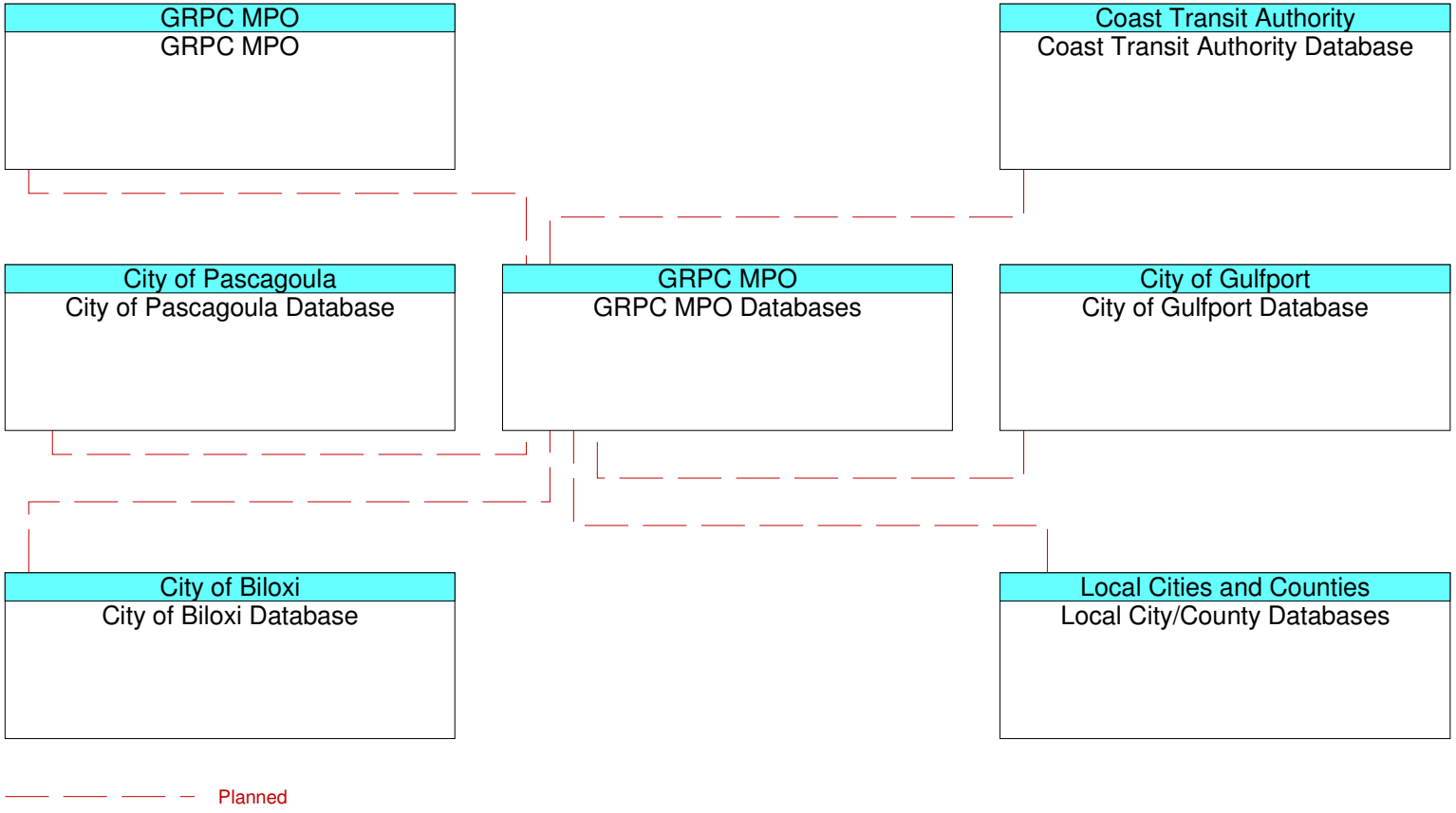
GRPC MPO
GRPC MPO
Coast Transit Authority
Coast Transit Authority Database
City of Pascagoula
City of Pascagoula Database
GRPC MPO
GRPC MPO Databases
City of Gulfport
City of Gulfport Database
City of Biloxi
City of Biloxi Database
Local Cities and Counties
Local City/County Databases
Planned

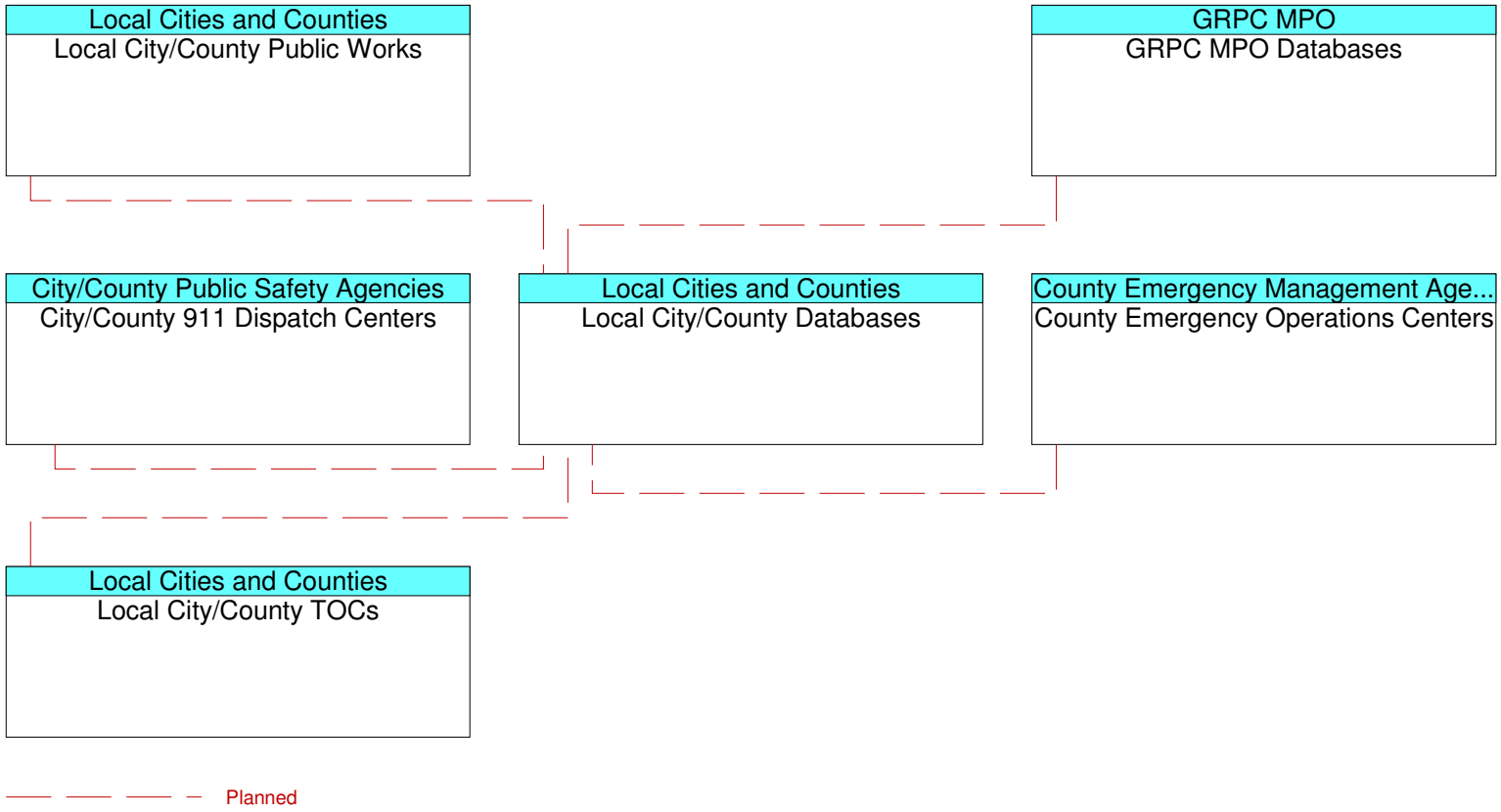
Local Cities and Counties
Local City/County Public Works
GRPC MPO
GRPC MPO Databases
City/County Public Safety Agencies
City/County 911 Dispatch Centers
Local Cities and Counties
Local City/County Databases
County Emergency Management Age...
County Emergency Operations Centers
Local Cities and Counties
Local City/County TOCs
Planned

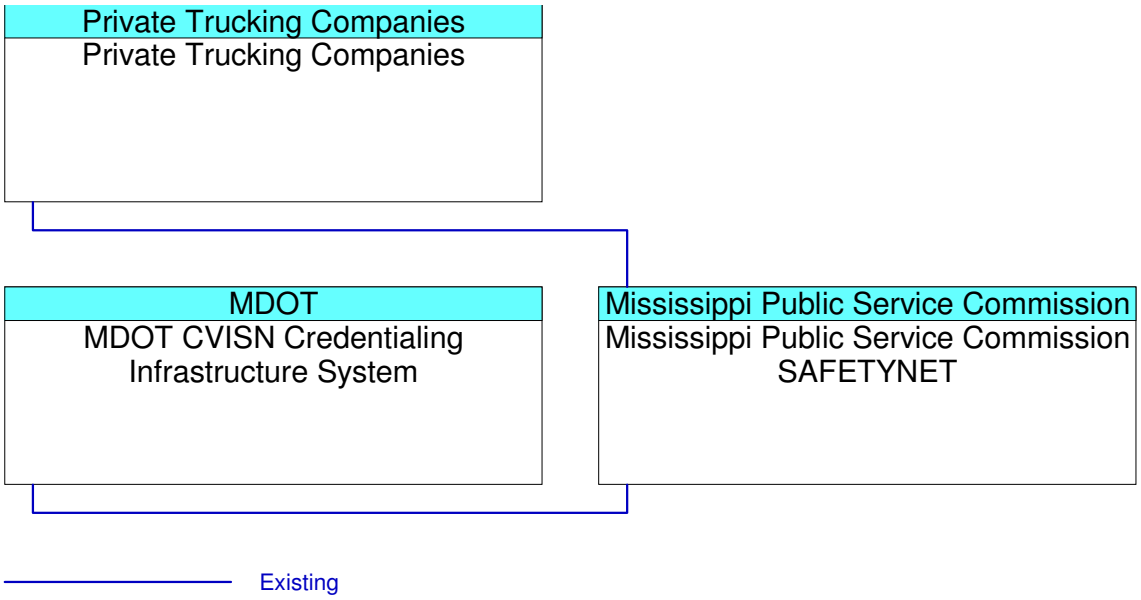
Private Trucking Companies
Private Trucking Companies
MDOT
MDOT CVISN Credentialing Infrastructure System
Mississippi Public Service Commission
Mississippi Public Service Commission SAFETYNET
Existing

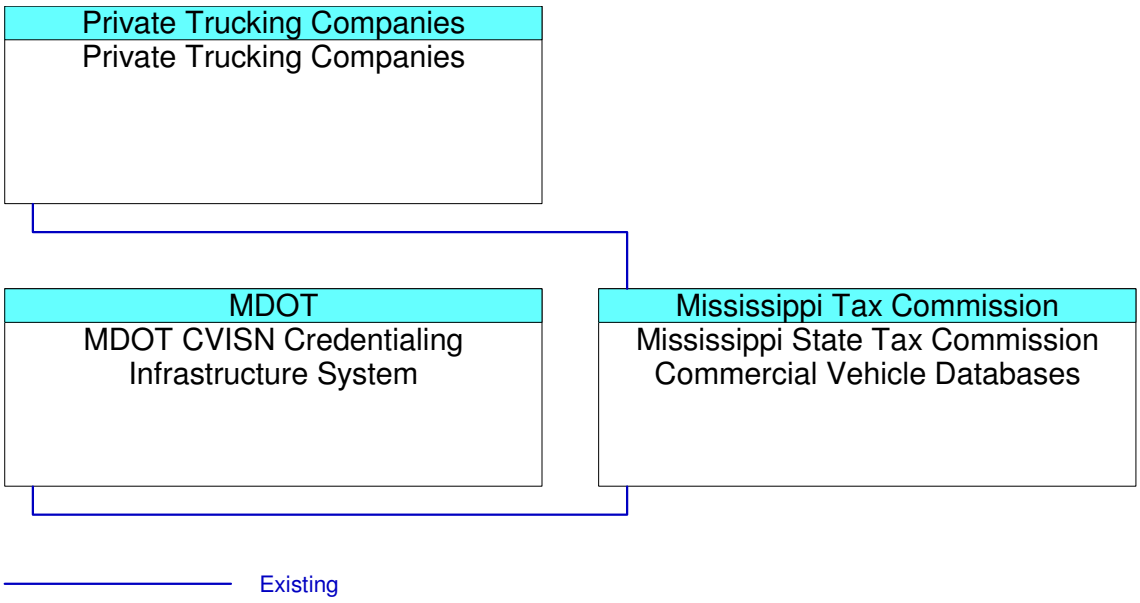
Private Trucking Companies
Private Trucking Companies
MDOT
MDOT CVISN Credentialing Infrastructure System
Mississippi Tax Commission
Mississippi State Tax Commission Commercial Vehicle Databases
Existing

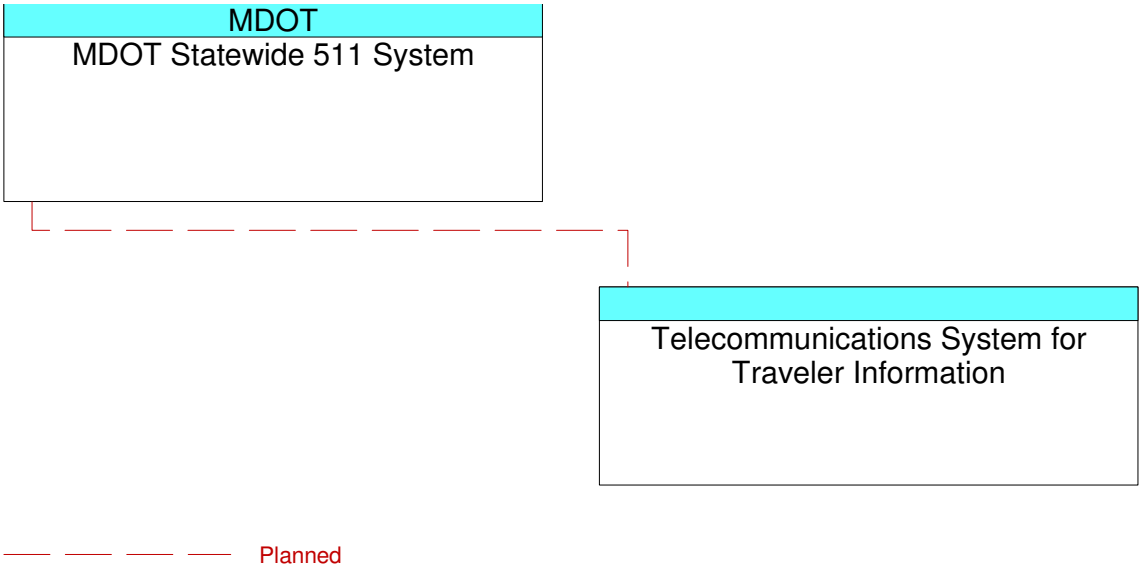
MDOT
MDOT Statewide 511 System
Telecommunications System for Traveler Information
Planned

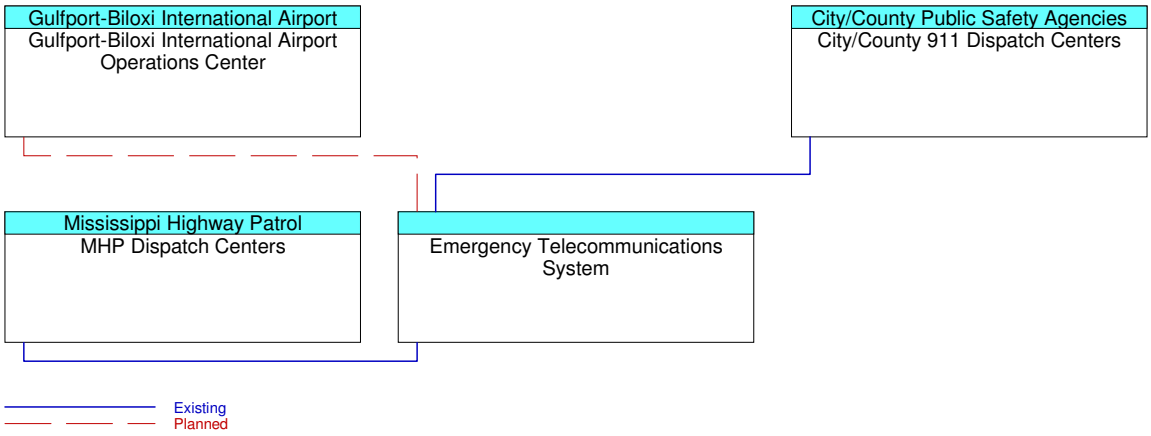
Gulfport-Biloxi International Airport
Gulfport-Biloxi International Airport Operations Center
City/County Public Safety Agencies
City/County 911 Dispatch Centers
Mississippi Highway Patrol
MHP Dispatch Centers
Emergency Telecommunications System
Existing
Planned

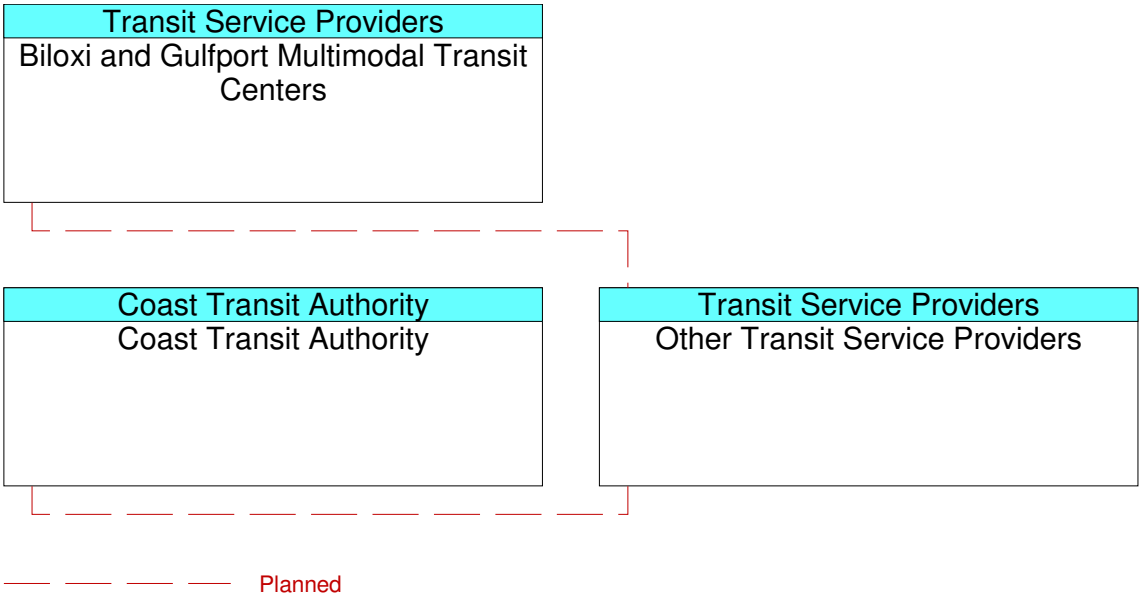
Transit Service Providers
Biloxi and Gulfport Multimodal Transit Centers
Coast Transit Authority
Coast Transit Authority
Transit Service Providers
Other Transit Service Providers
Planned

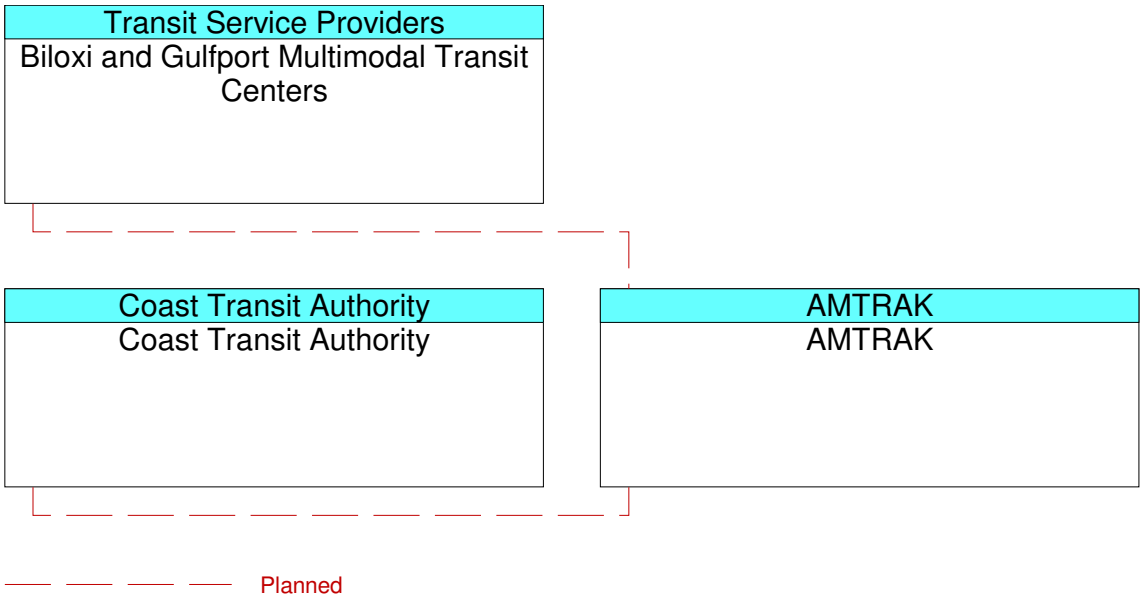
Transit Service Providers
Biloxi and Gulfport Multimodal Transit Centers
Coast Transit Authority
Coast Transit Authority
AMTRAK
AMTRAK
Planned

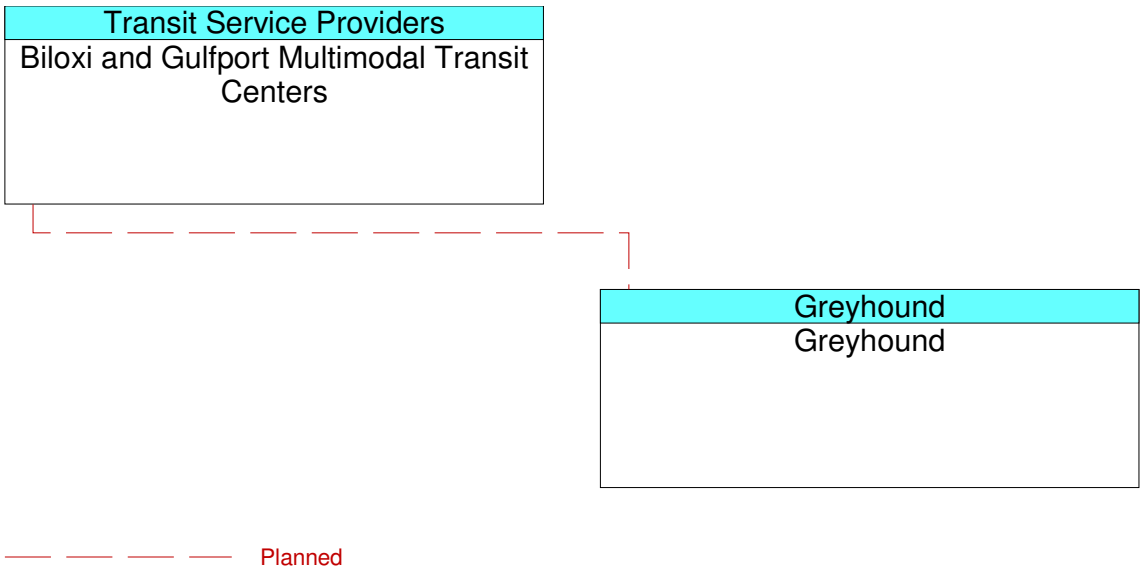
Transit Service Providers
Biloxi and Gulfport Multimodal Transit Centers
Greyhound
Greyhound
Planned

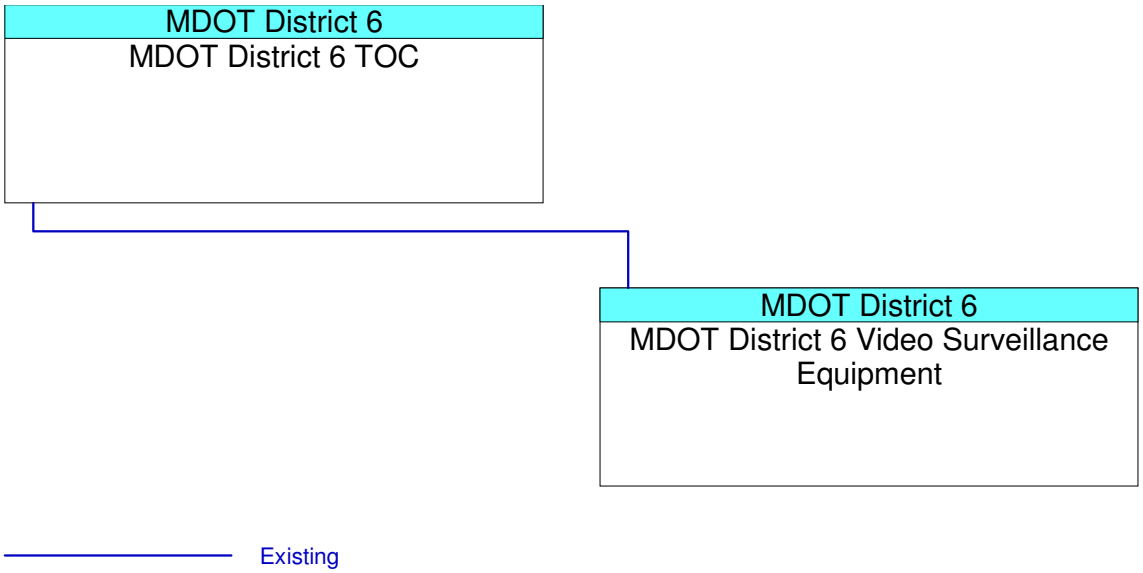
MDOT District 6
MDOT District 6 TOC
MDOT District 6
MDOT District 6 Video Surveillance Equipment
Existing

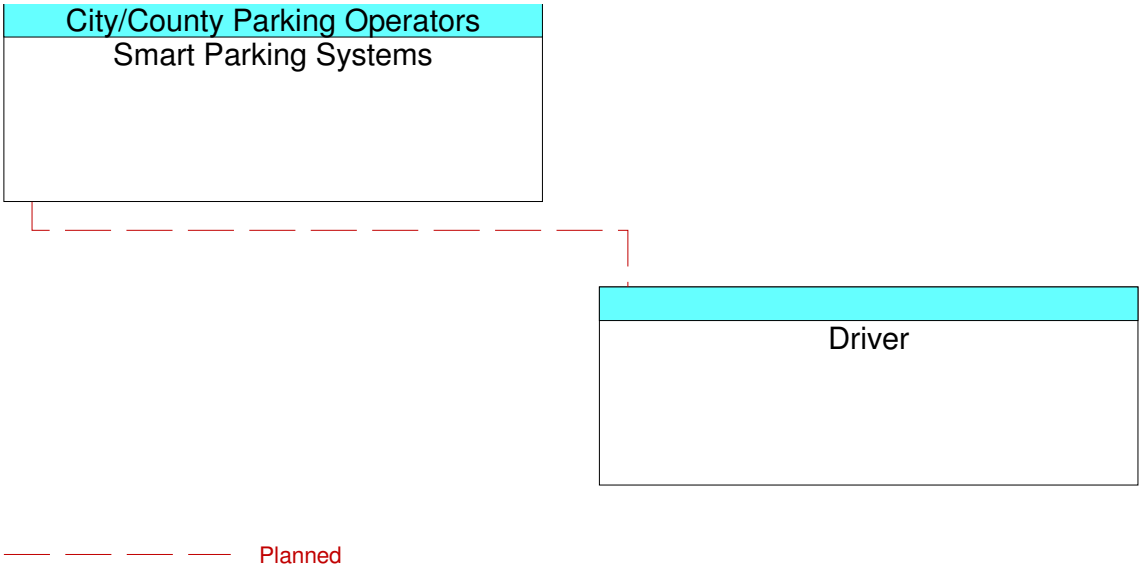
City/County Parking Operators
Smart Parking Systems
Driver
Planned

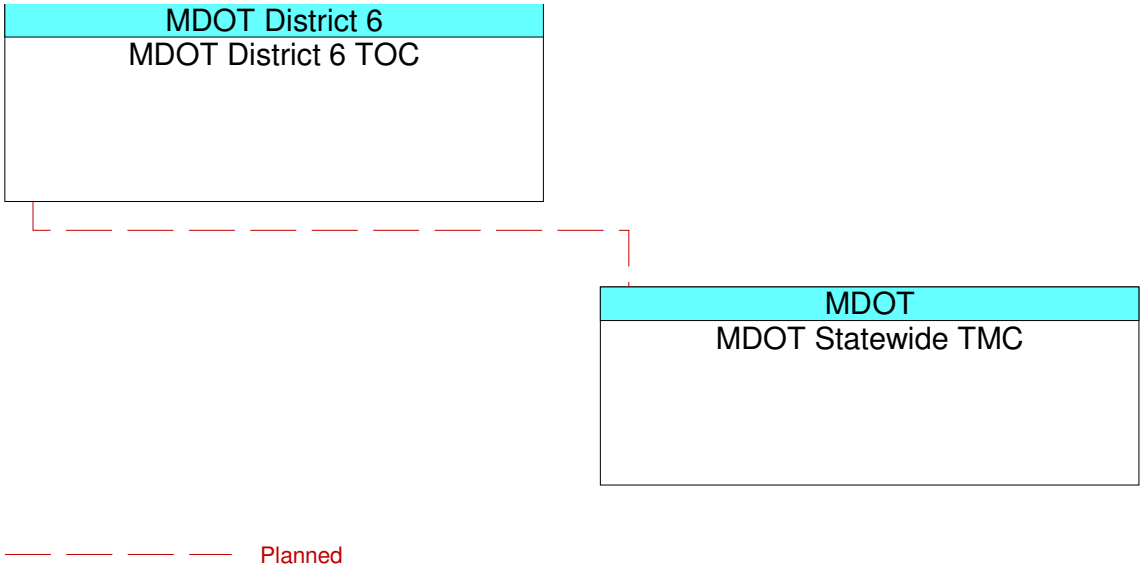
MDOT District 6
MDOT District 6 TOC
MDOT
MDOT Statewide TMC
Planned

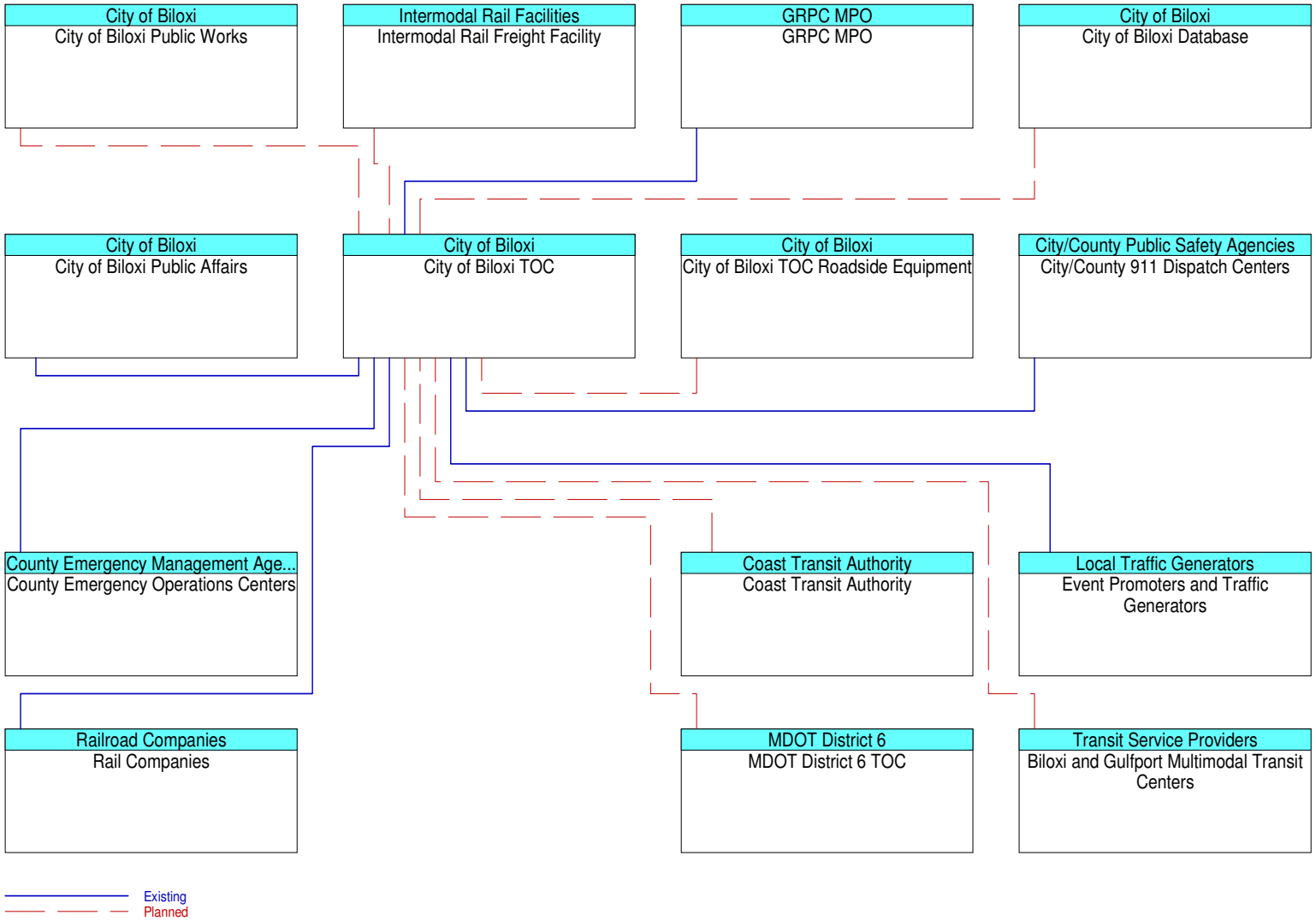
City of Biloxi
City of Biloxi Public Works
Intermodal Rail Facilities
Intermodal Rail Freight Facility
GRPC MPO
GRPC MPO
City of Biloxi
City of Biloxi Database
City of Biloxi
City of Biloxi Public Affairs
City of Biloxi
City of Biloxi TOC
City of Biloxi
City of Biloxi TOC Roadside Equipment
City/County Public Safety Agencies
City/County 911 Dispatch Centers
County Emergency Management Age...
County Emergency Operations Centers
Coast Transit Authority
Coast Transit Authority
Local Traffic Generators
Event Promoters and Traffic Generators
Railroad Companies
Rail Companies
MDOT District 6
MDOT District 6 TOC
Transit Service Providers
Biloxi and Gulfport Multimodal Transit Centers
Existing
Planned

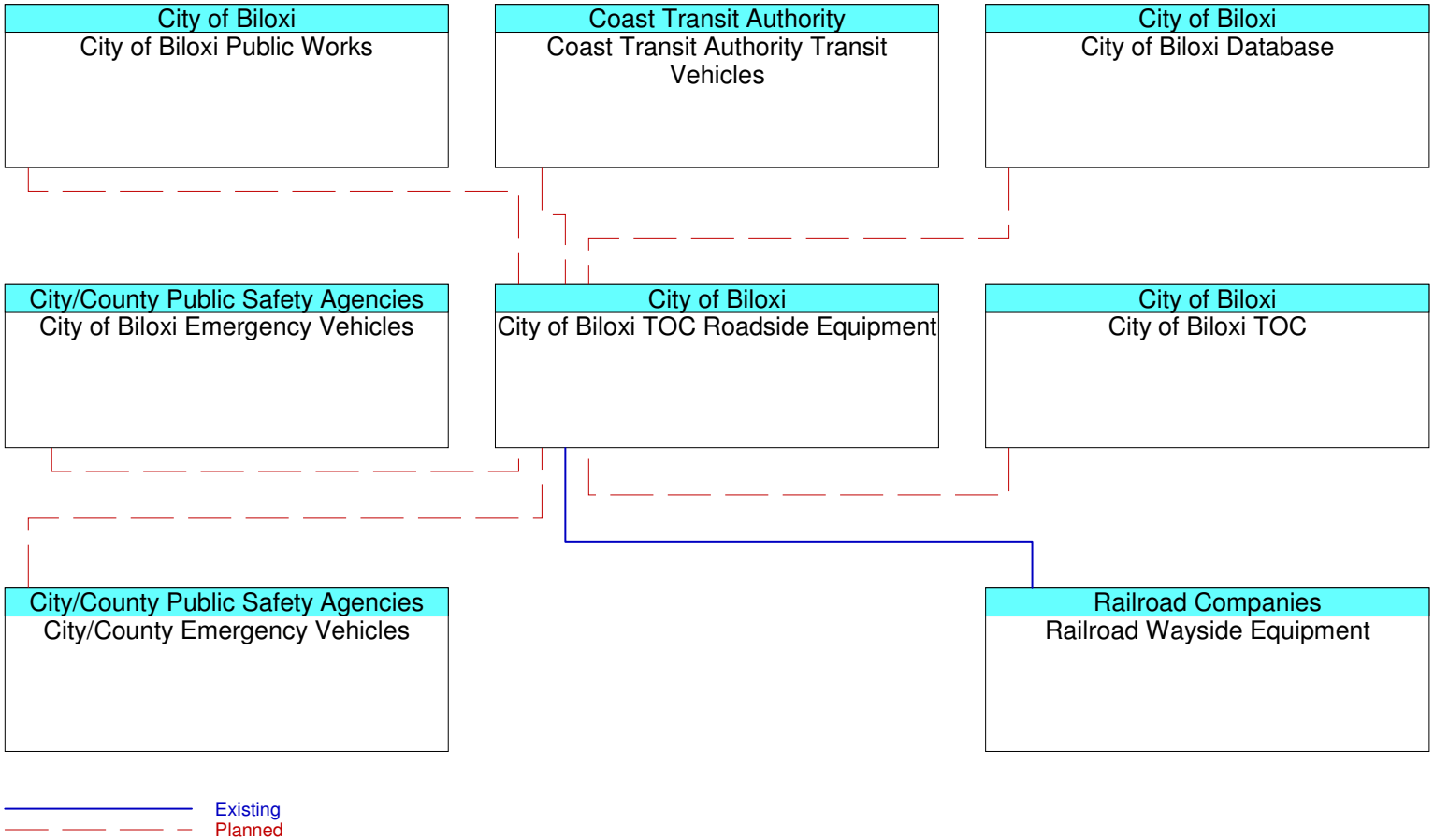
City of Biloxi
City of Biloxi Public Works
Coast Transit Authority
Coast Transit Authority Transit Vehicles
City of Biloxi
City of Biloxi Database
City/County Public Safety Agencies
City of Biloxi Emergency Vehicles
City of Biloxi
City of Biloxi TOC Roadside Equipment
City of Biloxi
City of Biloxi TOC
City/County Public Safety Agencies
City/County Emergency Vehicles
Railroad Companies
Railroad Wayside Equipment
Existing
Planned

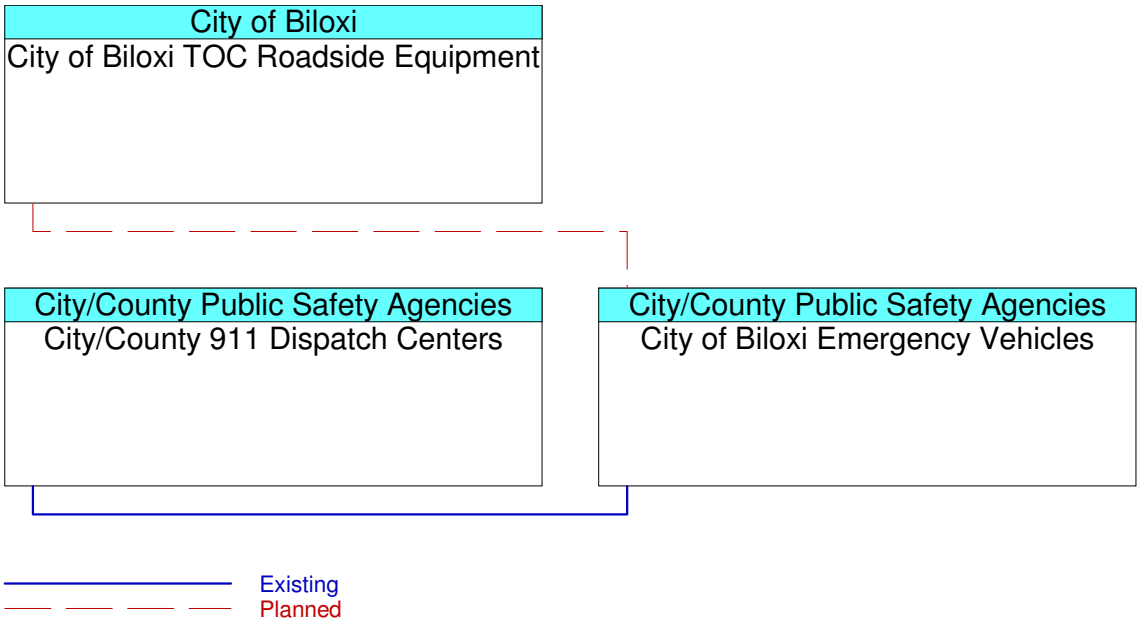
City of Biloxi
City of Biloxi TOC Roadside Equipment
City/County Public Safety Agencies
City/County 911 Dispatch Centers
City/County Public Safety Agencies
City of Biloxi Emergency Vehicles
Existing
Planned

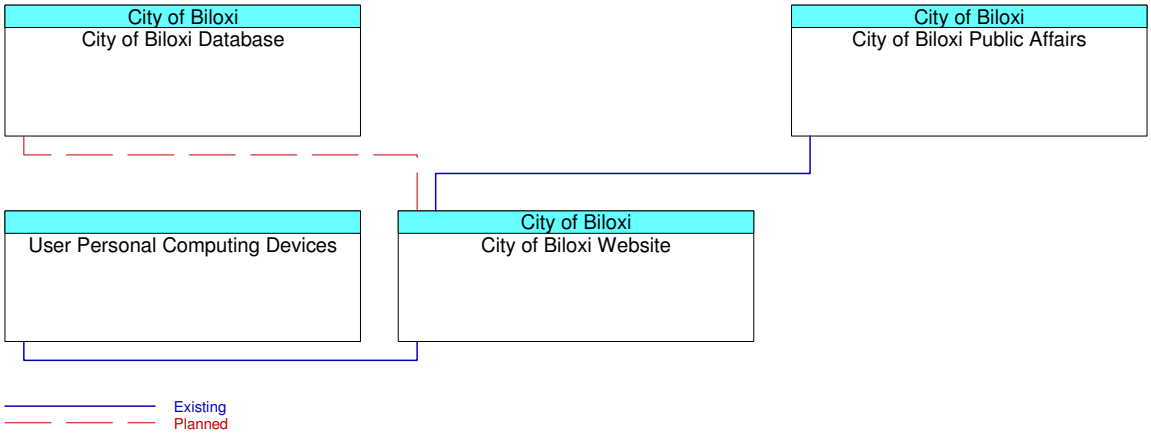
City of Biloxi
City of Biloxi Database
City of Biloxi
City of Biloxi Public Affairs
User Personal Computing Devices
City of Biloxi
City of Biloxi Website
Existing
Planned

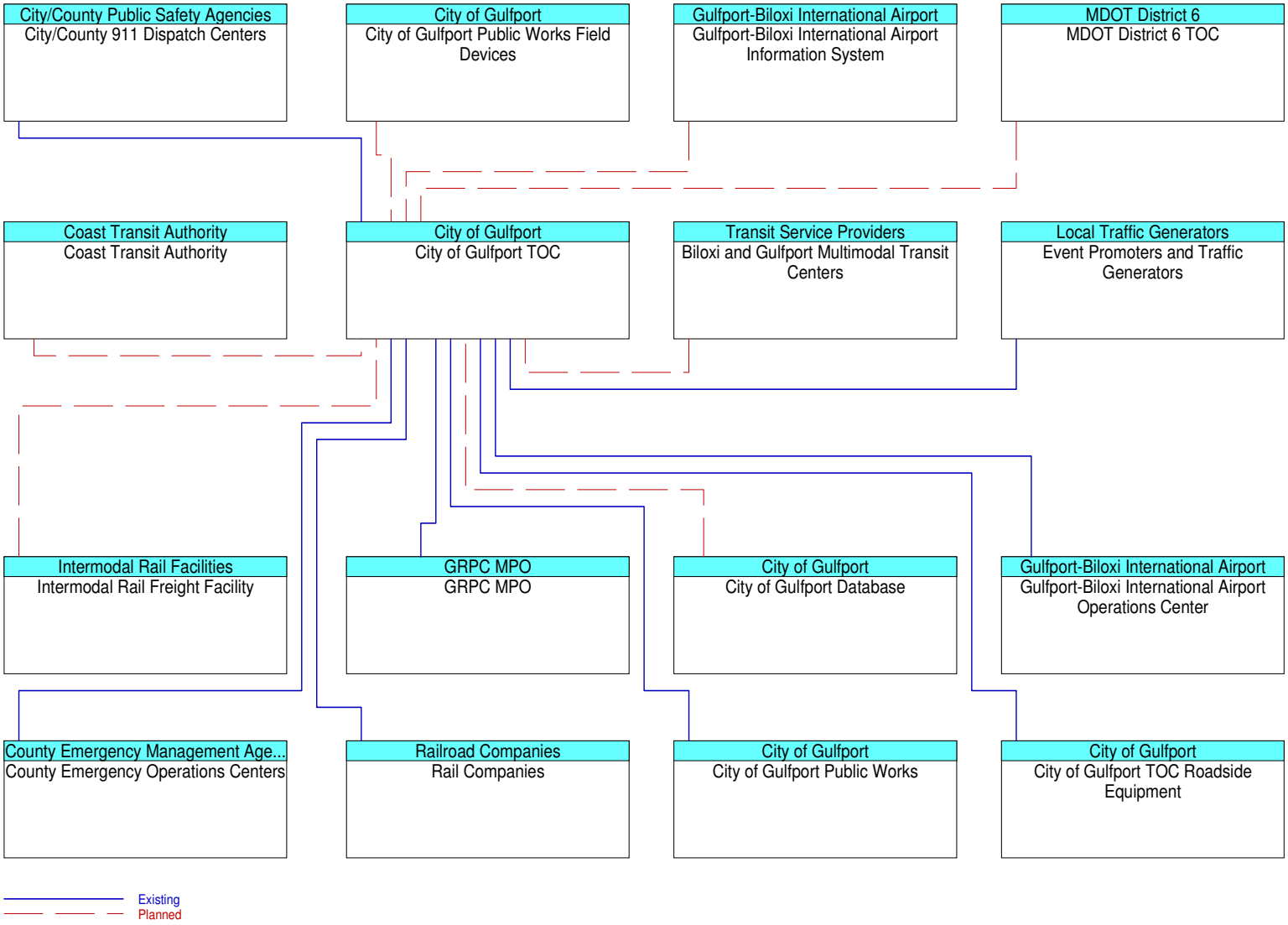
City/County Public Safety Agencies
City/County 911 Dispatch Centers
City of Gulfport
City of Gulfport Public Works Field Devices
Gulfport-Biloxi International Airport
Gulfport-Biloxi International Airport Information System
MDOT District 6
MDOT District 6 TOC
Coast Transit Authority
Coast Transit Authority
City of Gulfport
City of Gulfport TOC
Transit Service Providers
Biloxi and Gulfport Multimodal Transit Centers
Local Traffic Generators
Event Promoters and Traffic Generators
Intermodal Rail Facilities
Intermodal Rail Freight Facility
GRPC MPO
GRPC MPO
City of Gulfport
City of Gulfport Database
Gulfport-Biloxi International Airport
Gulfport-Biloxi International Airport Operations Center
County Emergency Management Age...
County Emergency Operations Centers
Railroad Companies
Rail Companies
City of Gulfport
City of Gulfport Public Works
City of Gulfport
City of Gulfport TOC Roadside Equipment
Existing
Planned

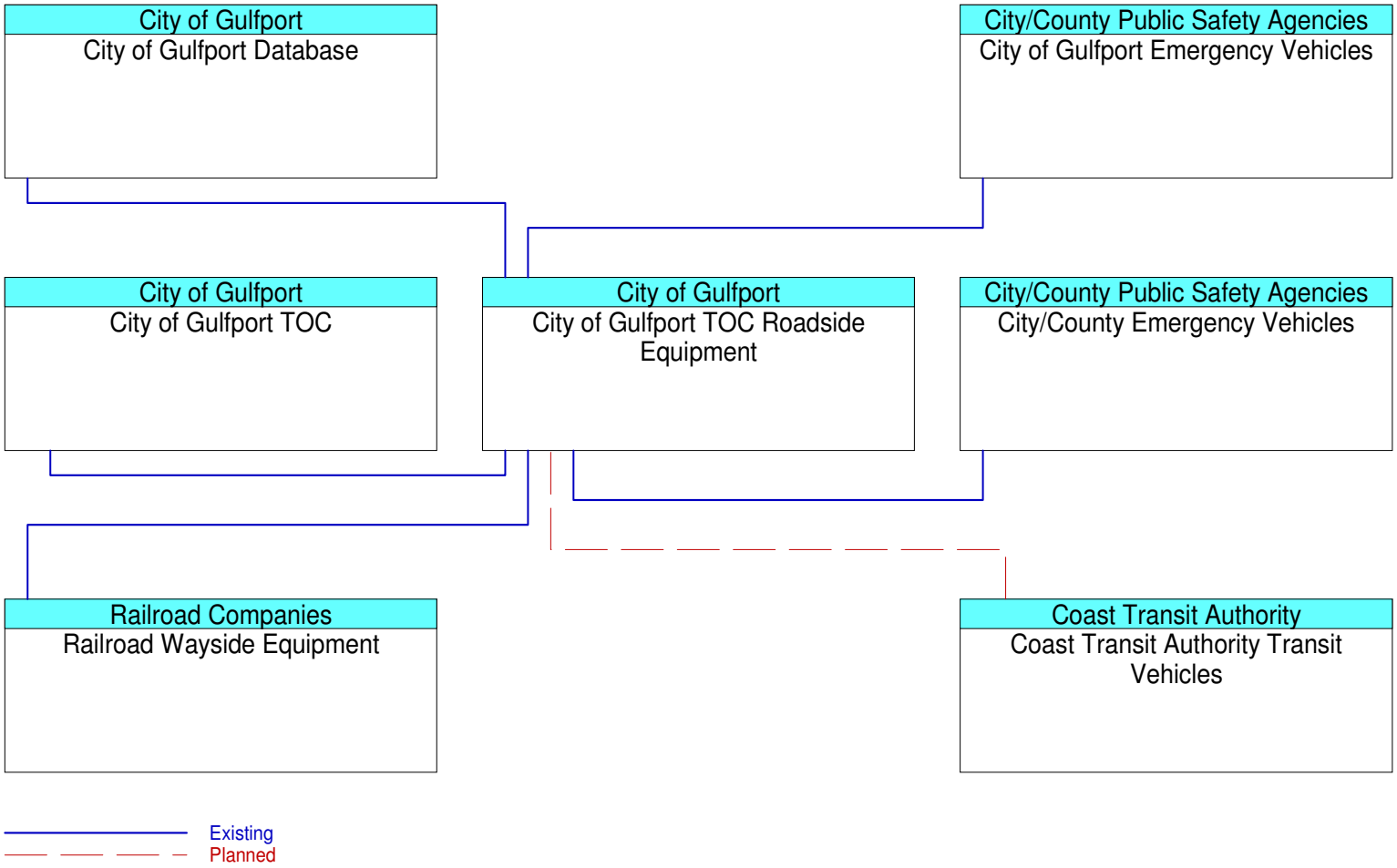
City of Gulfport
City of Gulfport Database
City/County Public Safety Agencies
City of Gulfport Emergency Vehicles
City of Gulfport
City of Gulfport TOC
City of Gulfport
City of Gulfport TOC Roadside Equipment
City/County Public Safety Agencies
City/County Emergency Vehicles
Railroad Companies
Railroad Wayside Equipment
Coast Transit Authority
Coast Transit Authority Transit Vehicles
Existing
Planned

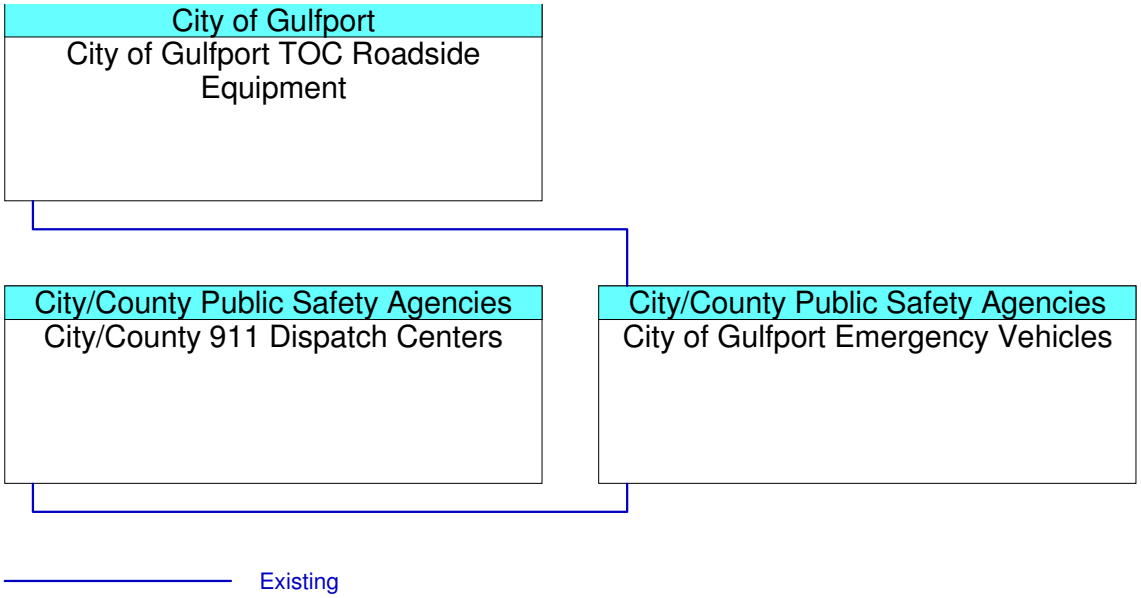
City of Gulfport
City of Gulfport TOC Roadside Equipment
City/County Public Safety Agencies
City/County 911 Dispatch Centers
City/County Public Safety Agencies
City of Gulfport Emergency Vehicles
Existing

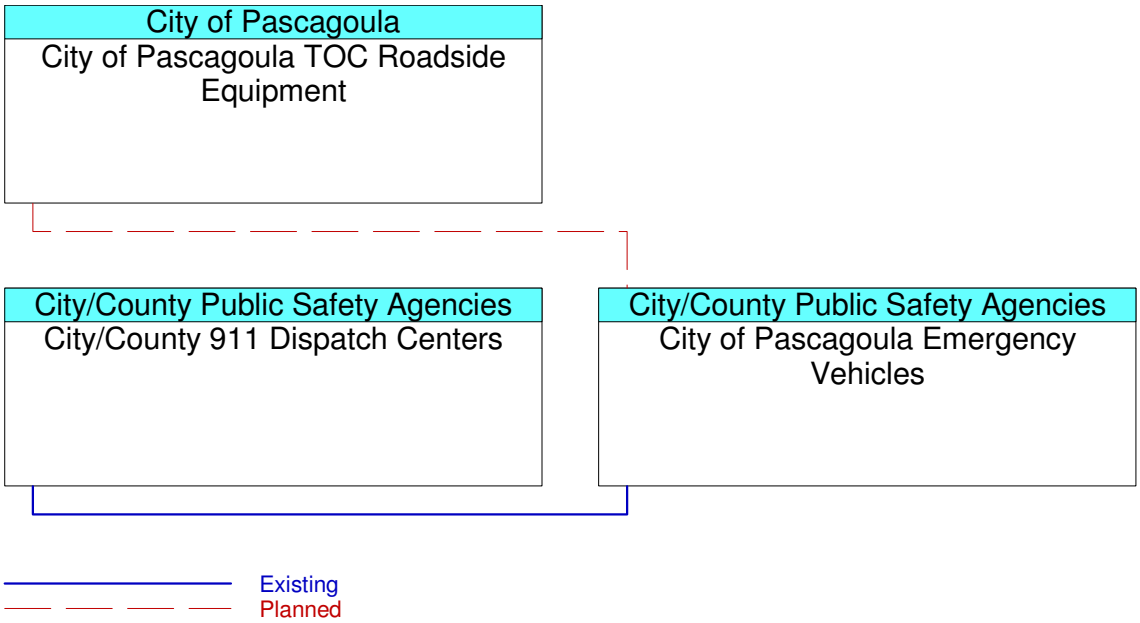
City of Pascagoula
City of Pascagoula TOC Roadside Equipment
City/County Public Safety Agencies
City/County 911 Dispatch Centers
City/County Public Safety Agencies
City of Pascagoula Emergency Vehicles
Existing
Planned

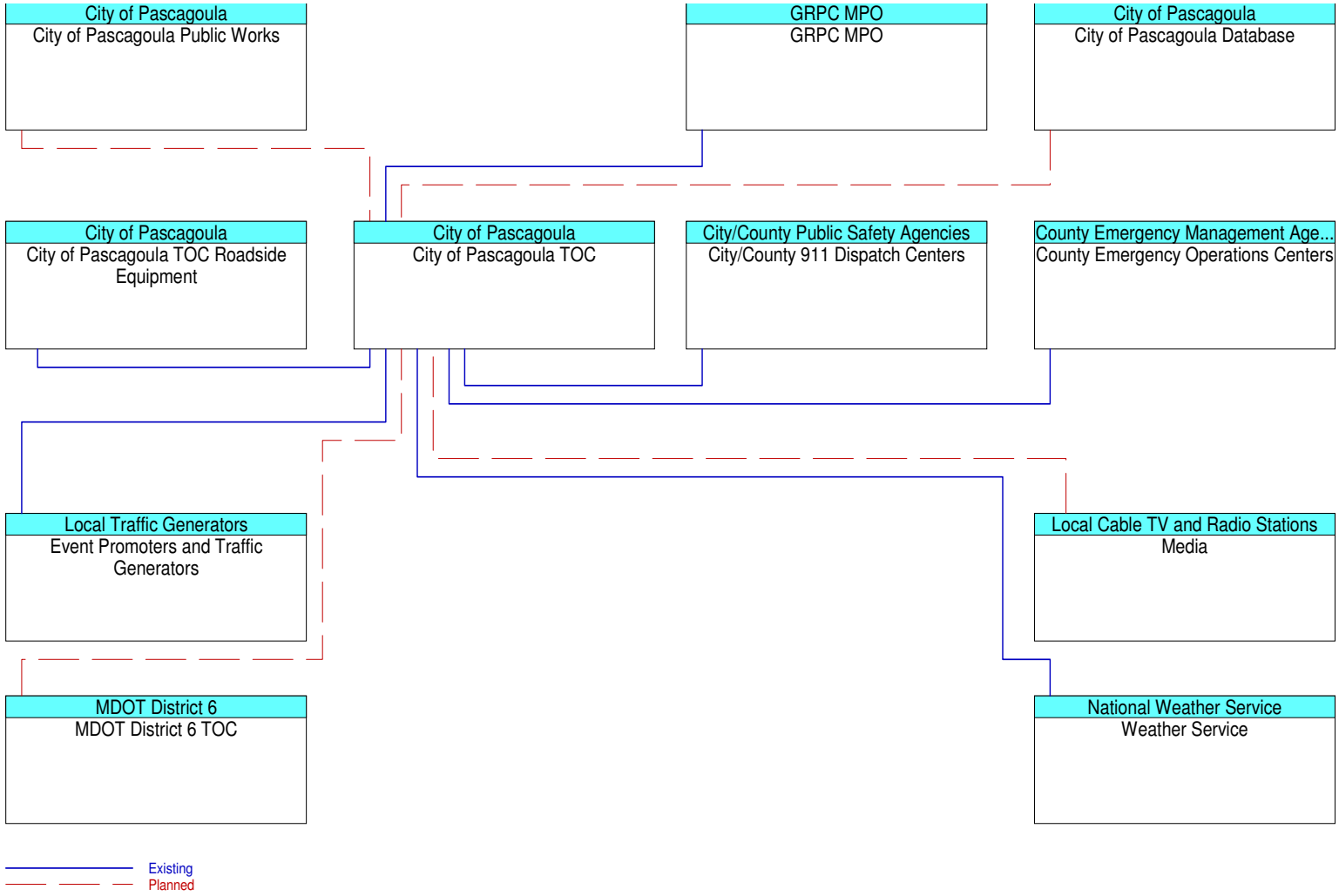
City of Pascagoula
City of Pascagoula Public Works
GRPC MPO
GRPC MPO
City of Pascagoula
City of Pascagoula Database
City of Pascagoula
City of Pascagoula TOC Roadside Equipment
City of Pascagoula
City of Pascagoula TOC
City/County Public Safety Agencies
City/County 911 Dispatch Centers
County Emergency Management Age...
County Emergency Operations Centers
Local Traffic Generators
Event Promoters and Traffic Generators
Local Cable TV and Radio Stations
Media
MDOT District 6
MDOT District 6 TOC
National Weather Service
Weather Service
Existing
Planned

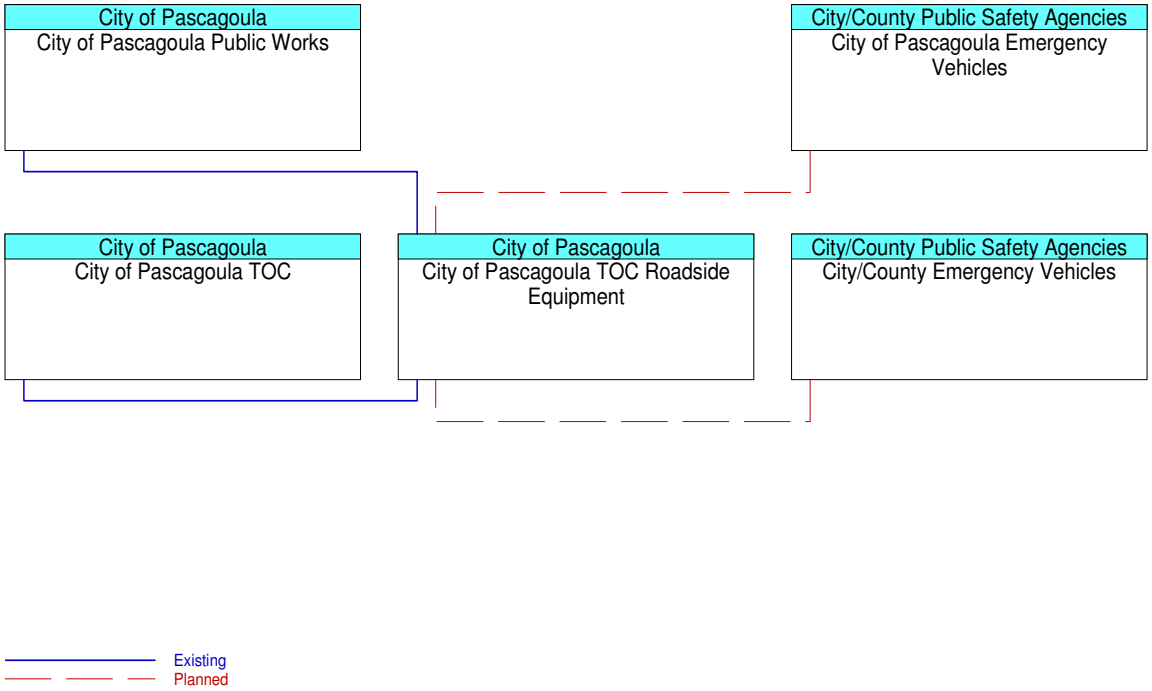
City of Pascagoula
City of Pascagoula Public Works
City/County Public Safety Agencies
City of Pascagoula Emergency Vehicles
City of Pascagoula
City of Pascagoula TOC
City of Pascagoula
City of Pascagoula TOC Roadside Equipment
City/County Public Safety Agencies
City/County Emergency Vehicles
Existing
Planned

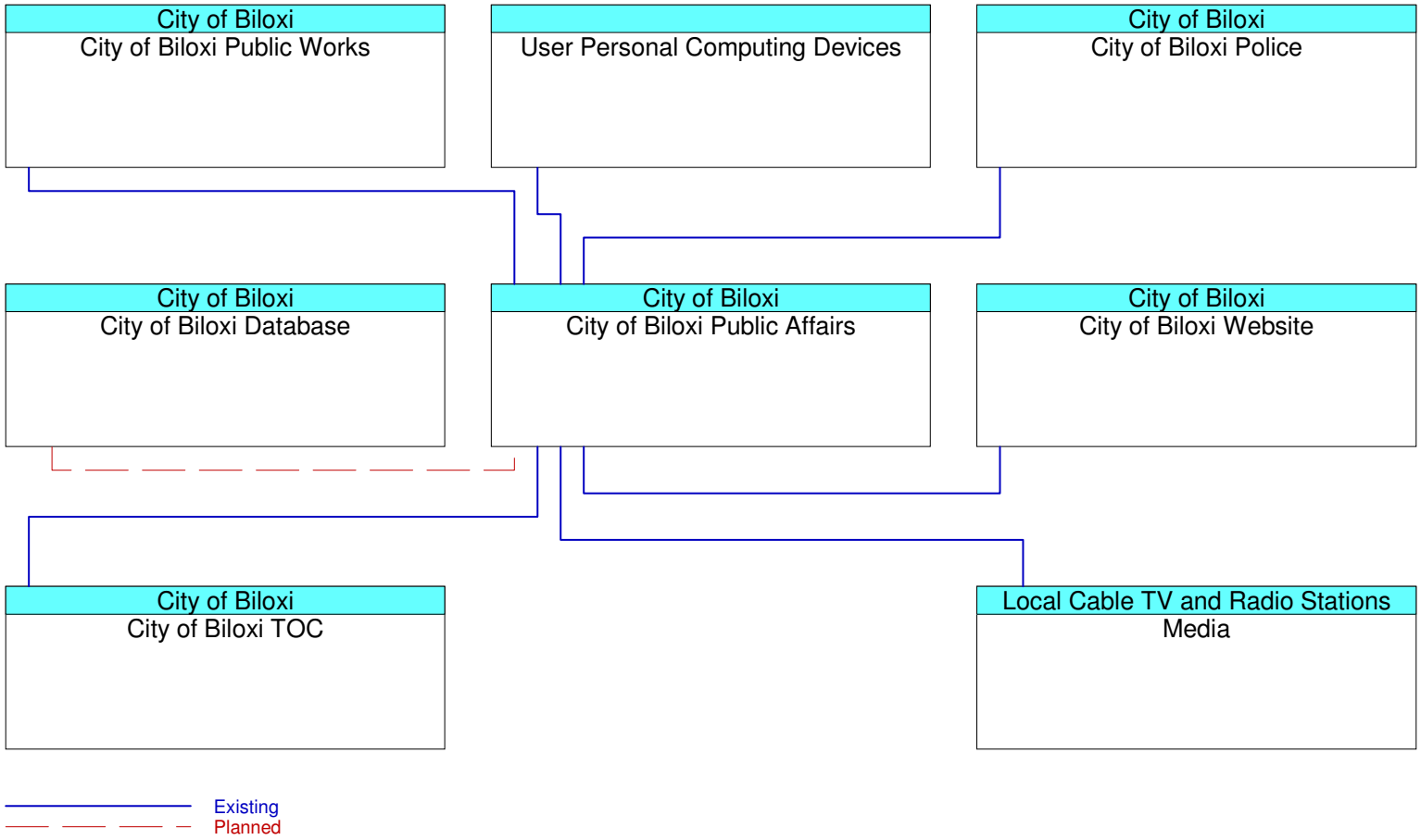
City of Biloxi
City of Biloxi Public Works
User Personal Computing Devices
City of Biloxi
City of Biloxi Police
City of Biloxi
City of Biloxi Database
City of Biloxi
City of Biloxi Public Affairs
City of Biloxi
City of Biloxi Website
City of Biloxi
City of Biloxi TOC
Local Cable TV and Radio Stations
Media
Existing
Planned

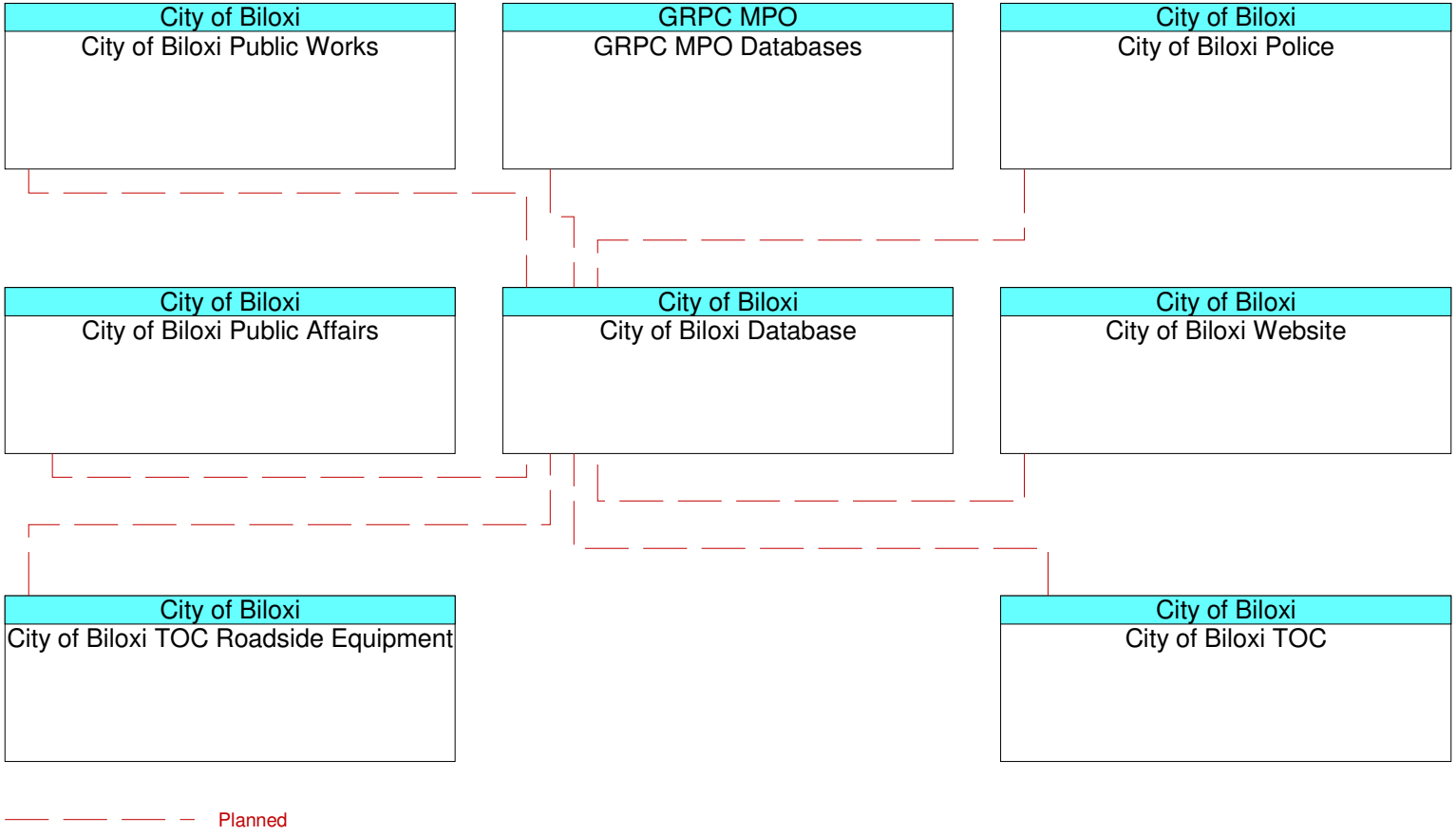
City of Biloxi
City of Biloxi Public Works
GRPC MPO
GRPC MPO Databases
City of Biloxi
City of Biloxi Police
City of Biloxi
City of Biloxi Public Affairs
City of Biloxi
City of Biloxi Database
City of Biloxi
City of Biloxi Website
City of Biloxi
City of Biloxi TOC Roadside Equipment
City of Biloxi
City of Biloxi TOC
Planned

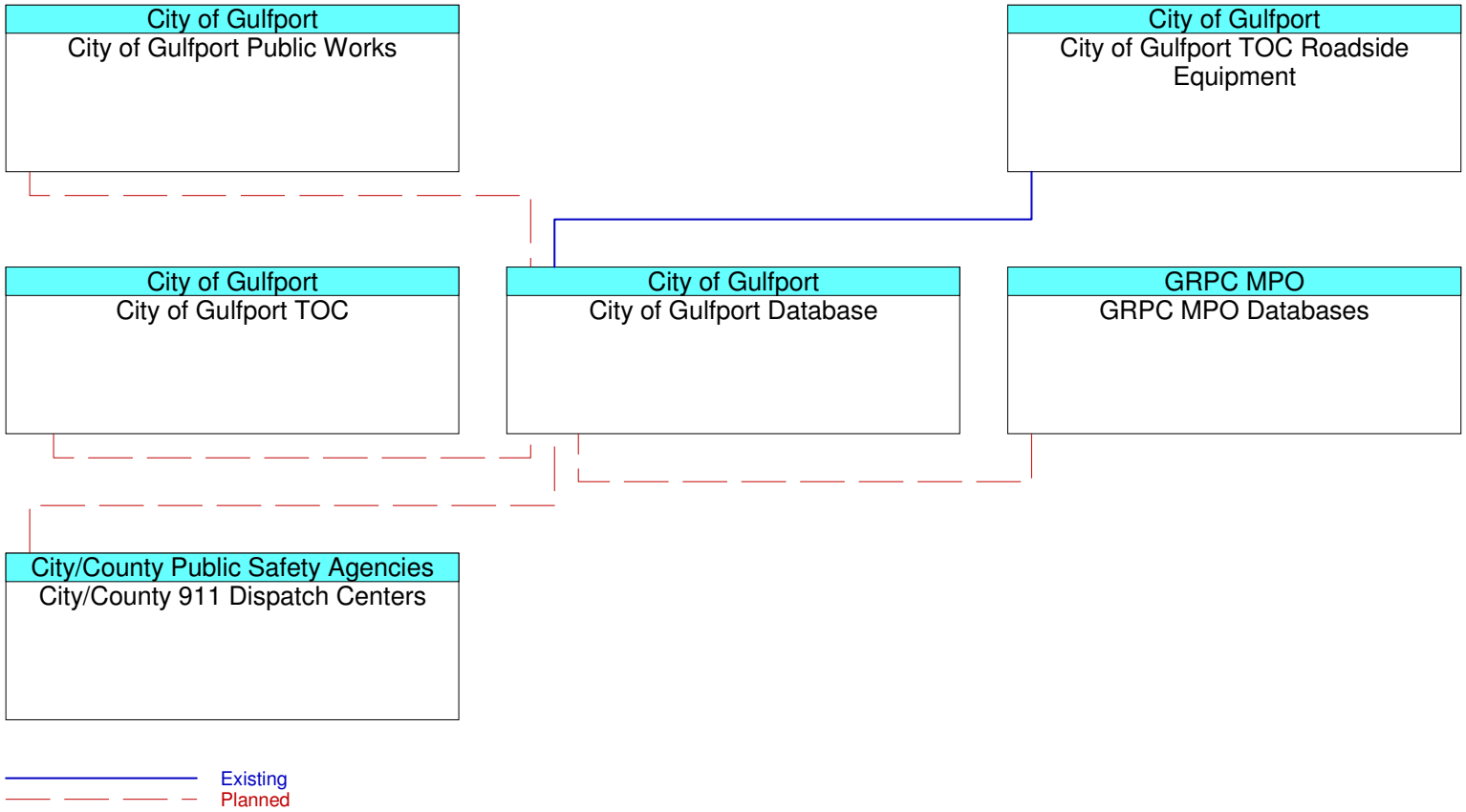
City of Gulfport
City of Gulfport Public Works
City of Gulfport
City of Gulfport TOC Roadside Equipment
City of Gulfport
City of Gulfport TOC
City of Gulfport
City of Gulfport Database
GRPC MPO
GRPC MPO Databases
City/County Public Safety Agencies
City/County 911 Dispatch Centers
Existing
Planned

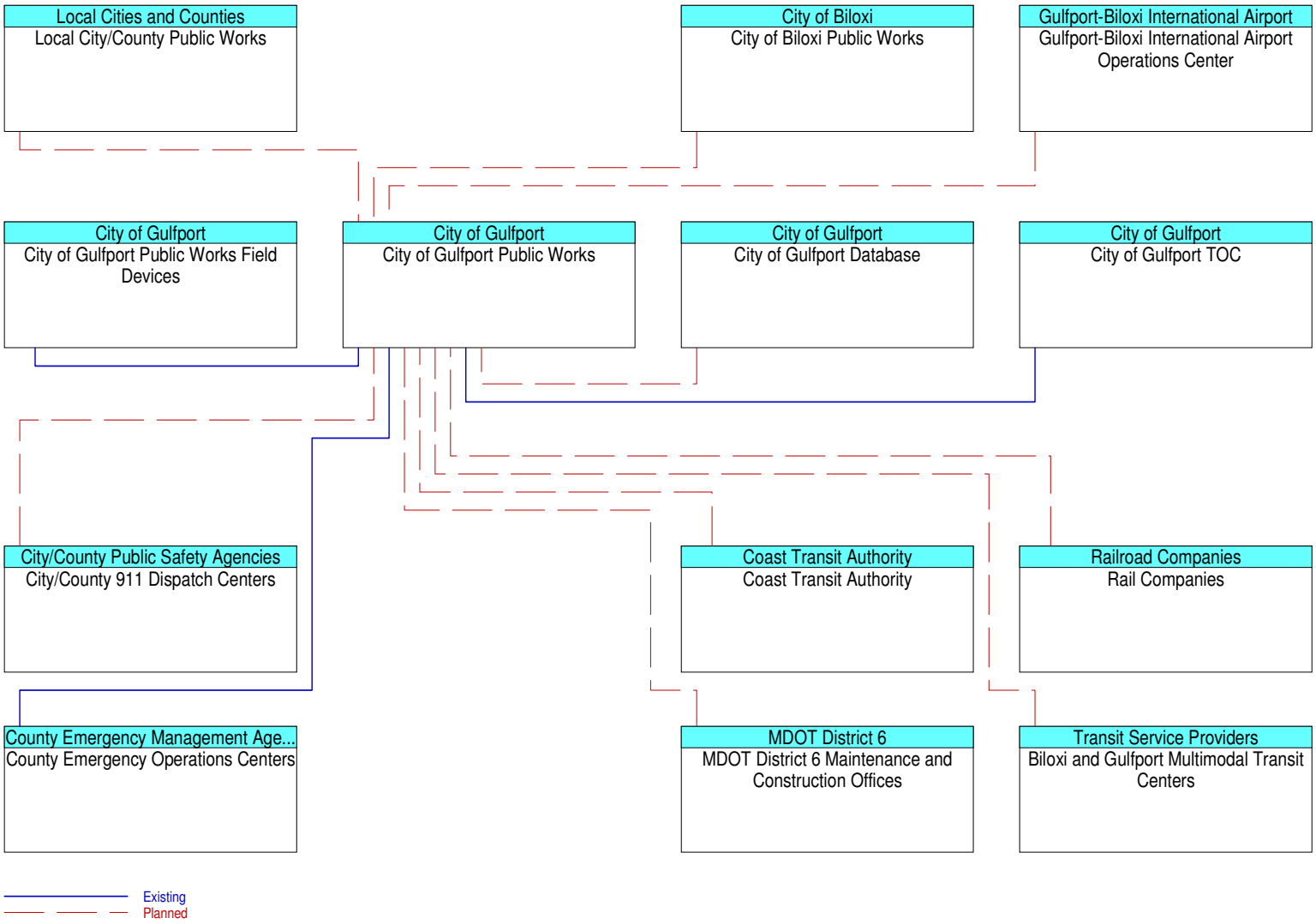
Local Cities and Counties
Local City/County Public Works
City of Biloxi
City of Biloxi Public Works
Gulfport-Biloxi International Airport
Gulfport-Biloxi International Airport Operations Center
City of Gulfport
City of Gulfport Public Works Field Devices
City of Gulfport
City of Gulfport Public Works
City of Gulfport
City of Gulfport Database
City of Gulfport
City of Gulfport TOC
City/County Public Safety Agencies
City/County 911 Dispatch Centers
Coast Transit Authority
Coast Transit Authority
Railroad Companies
Rail Companies
County Emergency Management Age...
County Emergency Operations Centers
MDOT District 6
MDOT District 6 Maintenance and Construction Offices
Transit Service Providers
Biloxi and Gulfport Multimodal Transit Centers
Existing
Planned

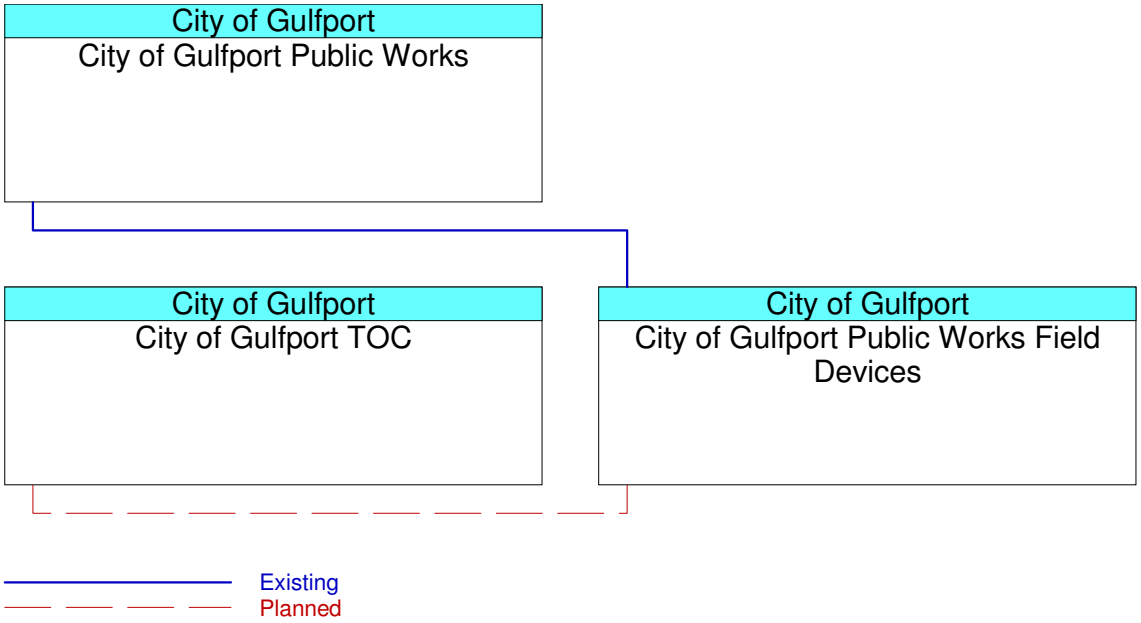
City of Gulfport
City of Gulfport Public Works
City of Gulfport
City of Gulfport TOC
City of Gulfport
City of Gulfport Public Works Field Devices
Existing
Planned

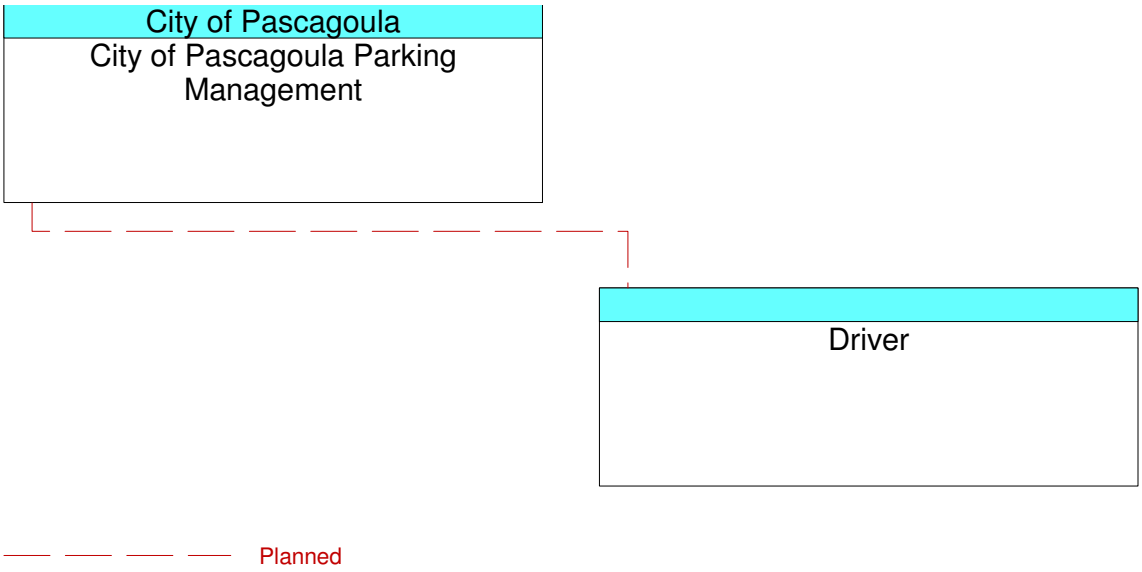
City of Pascagoula
City of Pascagoula Parking Management
Driver
Planned

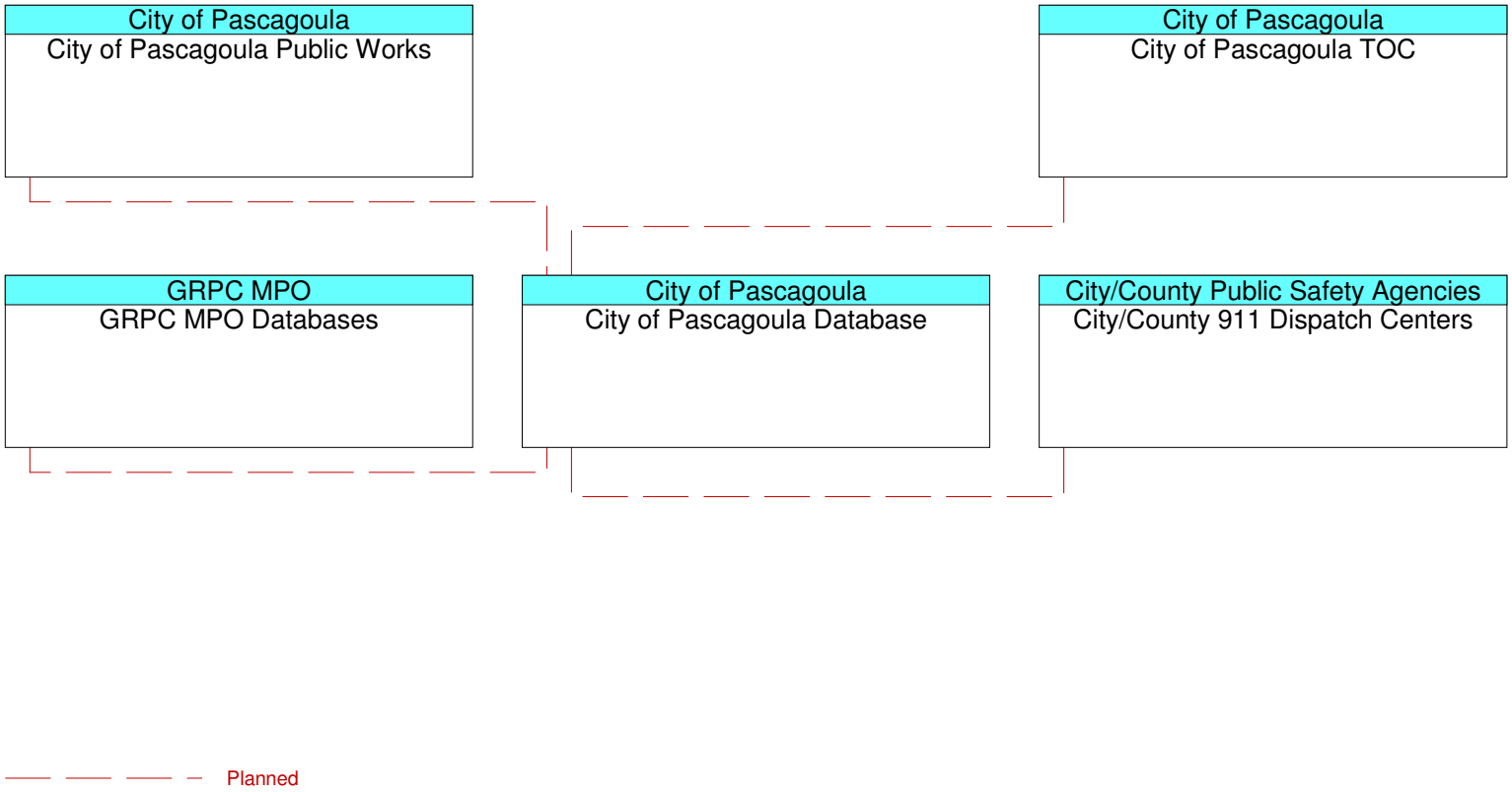
City of Pascagoula
City of Pascagoula Public Works
City of Pascagoula
City of Pascagoula TOC
GRPC MPO
GRPC MPO Databases
City of Pascagoula
City of Pascagoula Database
City/County Public Safety Agencies
City/County 911 Dispatch Centers
Planned

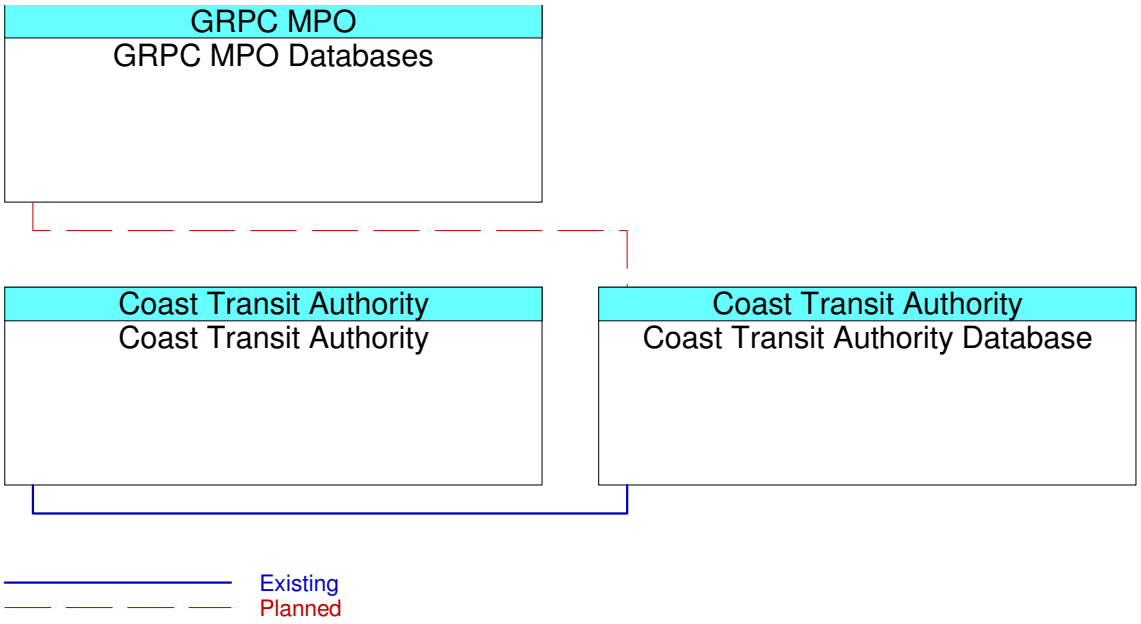
GRPC MPO
GRPC MPO Databases
Coast Transit Authority
Coast Transit Authority
Coast Transit Authority
Coast Transit Authority Database
Existing
Planned

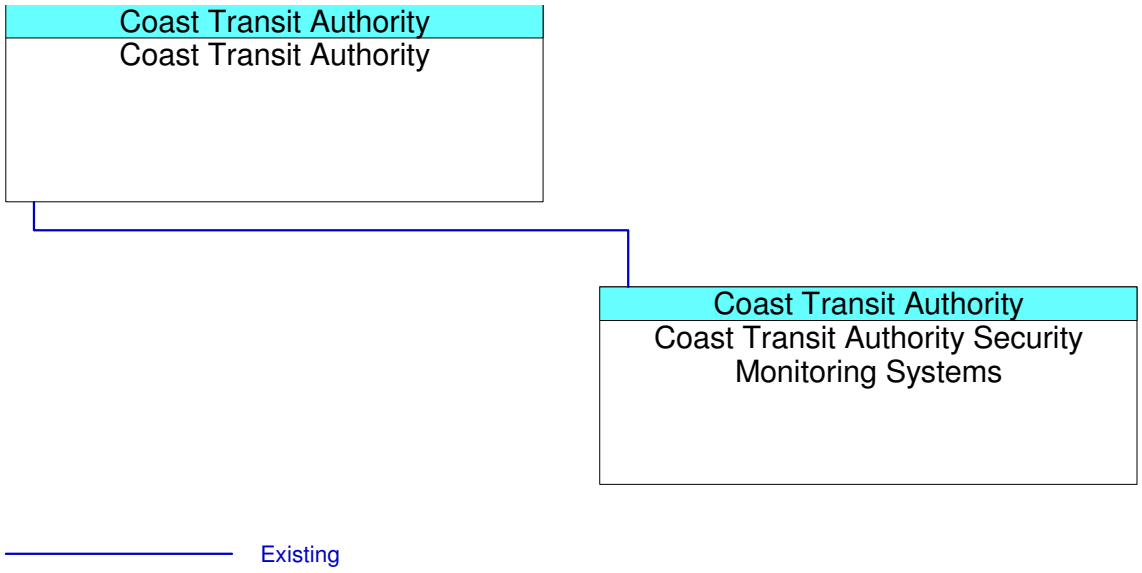
Coast Transit Authority
Coast Transit Authority
Coast Transit Authority
Coast Transit Authority Security Monitoring Systems
Existing

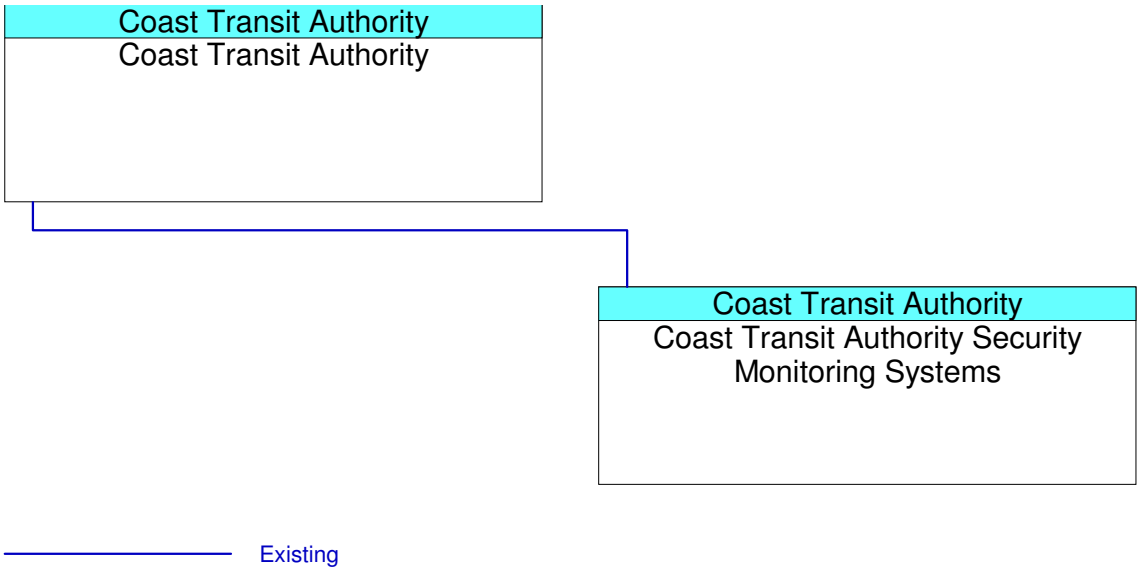
Coast Transit Authority
Coast Transit Authority
Coast Transit Authority
Coast Transit Authority Security Monitoring Systems
Existing

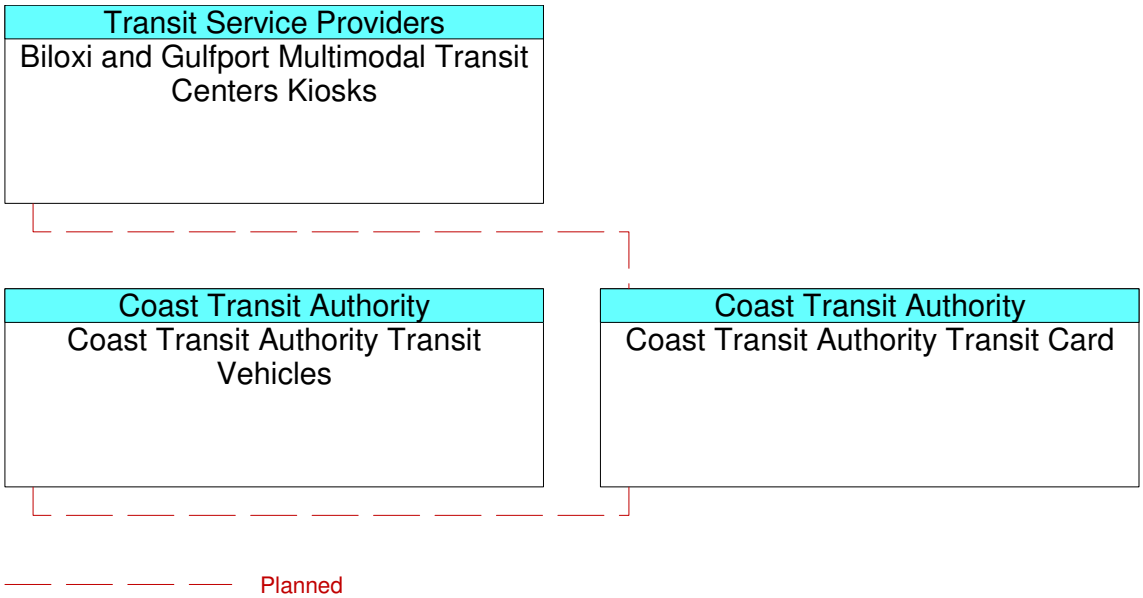
Transit Service Providers
Biloxi and Gulfport Multimodal Transit Centers Kiosks
Coast Transit Authority
Coast Transit Authority Transit Vehicles
Coast Transit Authority
Coast Transit Authority Transit Card
Planned

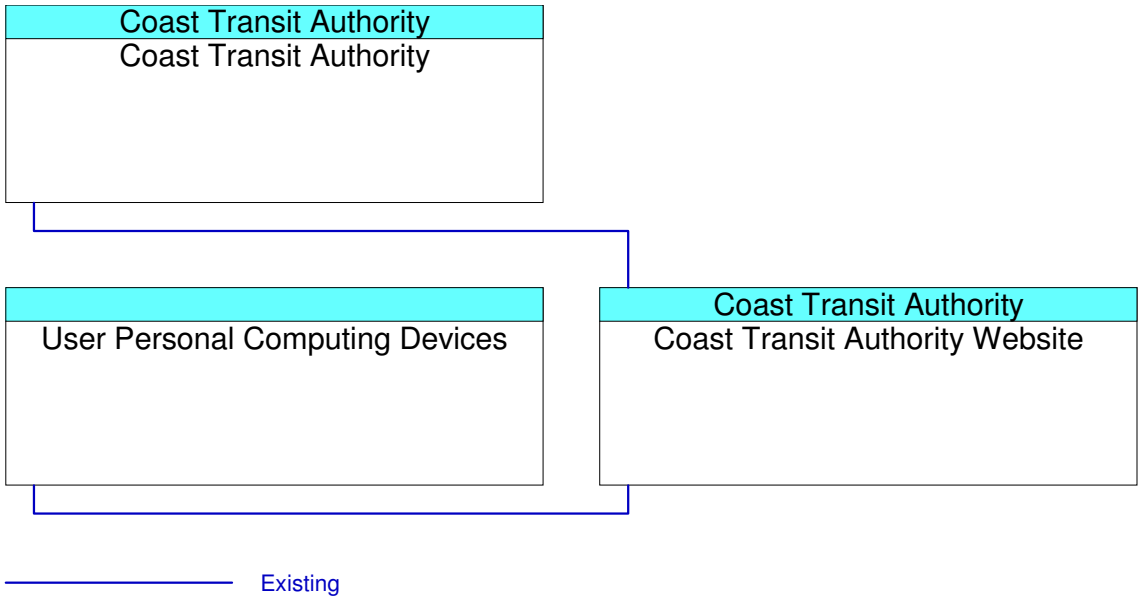
Coast Transit Authority
Coast Transit Authority
User Personal Computing Devices
Coast Transit Authority
Coast Transit Authority Website
Existing

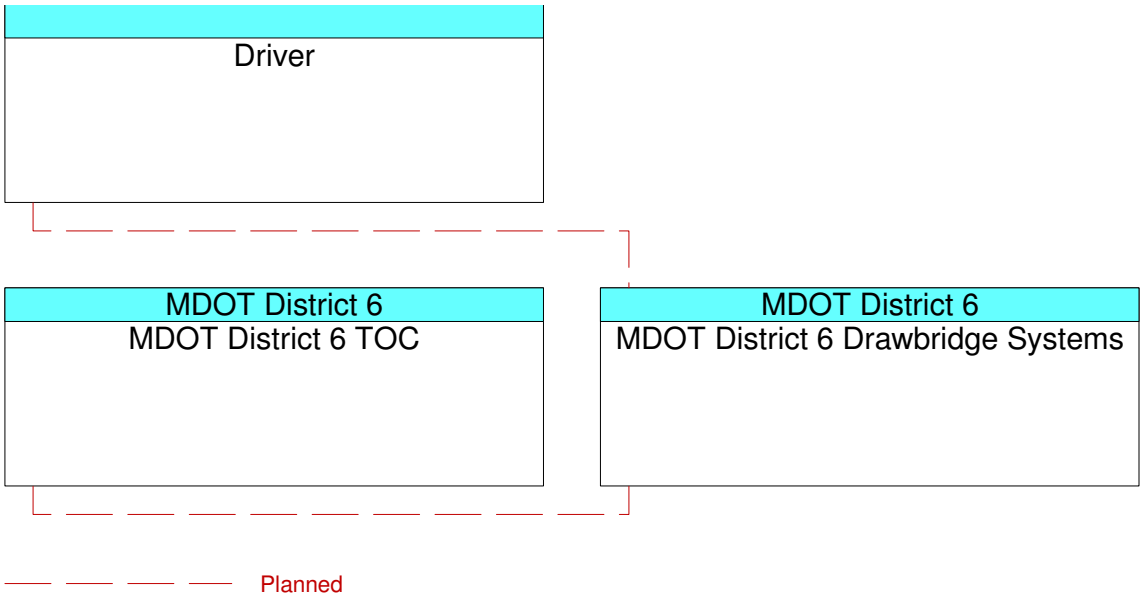
Driver
MDOT District 6
MDOT District 6 TOC
MDOT District 6
MDOT District 6 Drawbridge Systems
Planned

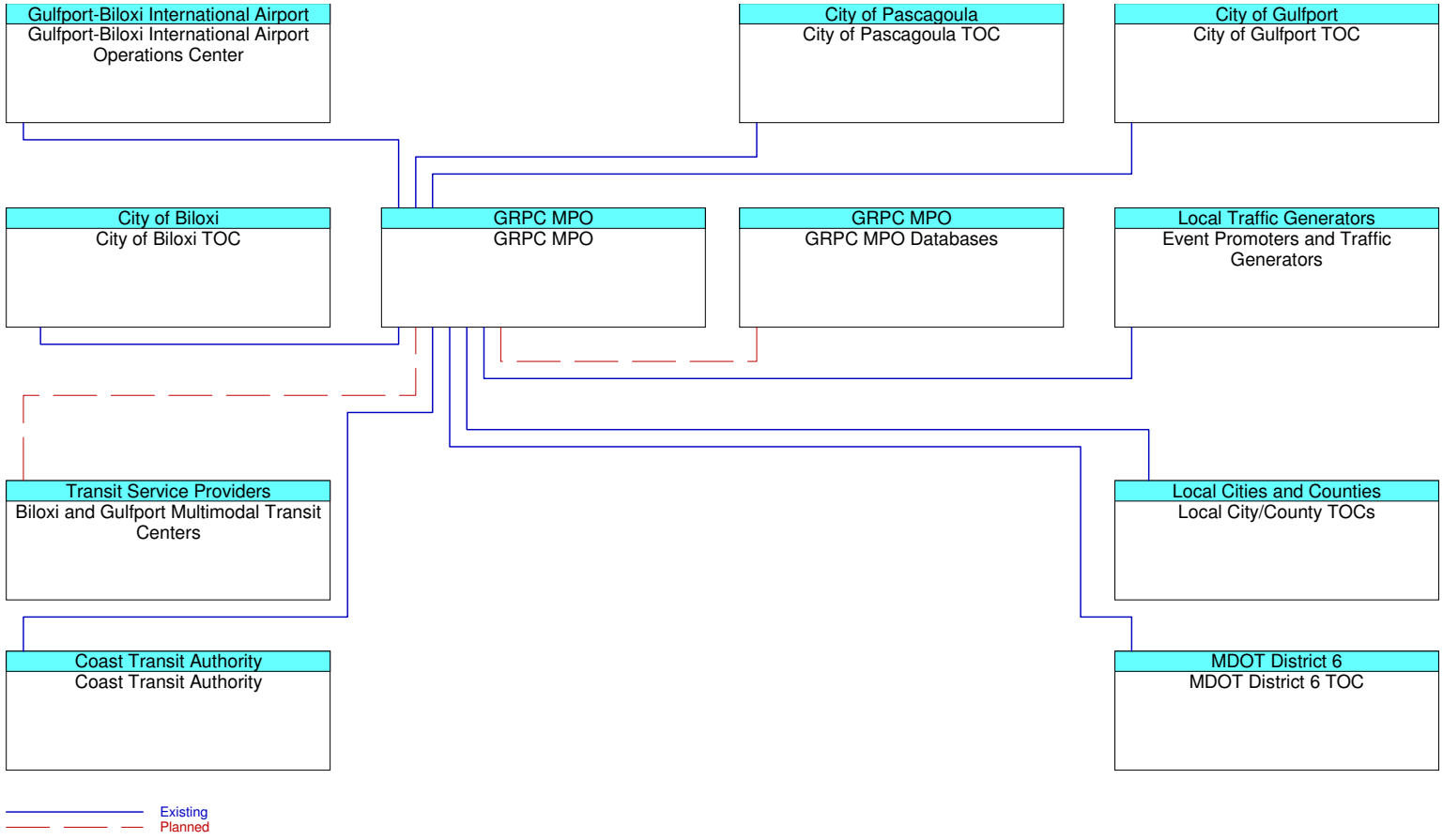
Gulfport-Biloxi International Airport
Gulfport-Biloxi International Airport Operations Center
City of Pascagoula
City of Pascagoula TOC
City of Gulfport
City of Gulfport TOC
City of Biloxi
City of Biloxi TOC
GRPC MPO
GRPC MPO
GRPC MPO
GRPC MPO Databases
Local Traffic Generators
Event Promoters and Traffic Generators
Transit Service Providers
Biloxi and Gulfport Multimodal Transit Centers
Local Cities and Counties
Local City/County TOCs
Coast Transit Authority
Coast Transit Authority
MDOT District 6
MDOT District 6 TOC
Existing
Planned

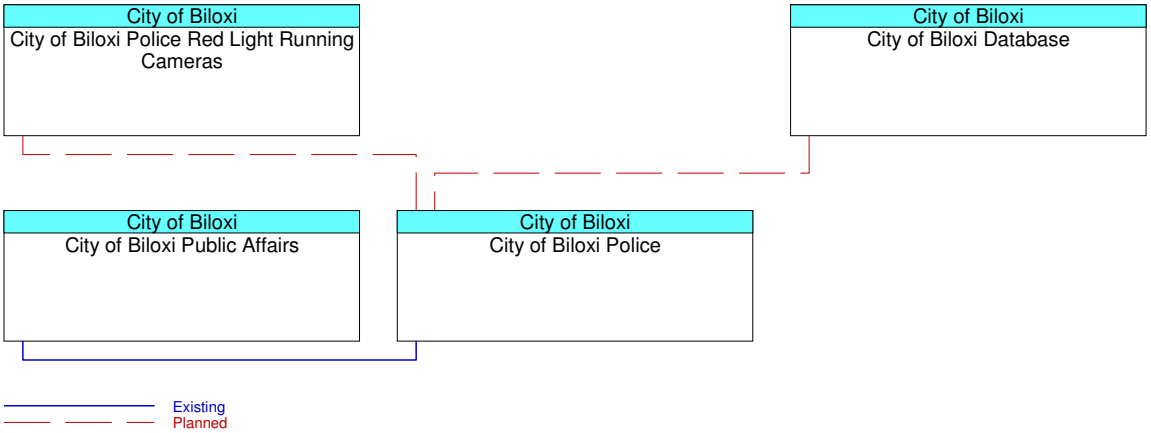
City of Biloxi
City of Biloxi Police Red Light Running Cameras
City of Biloxi
City of Biloxi Database
City of Biloxi
City of Biloxi Public Affairs
City of Biloxi
City of Biloxi Police
Existing
Planned

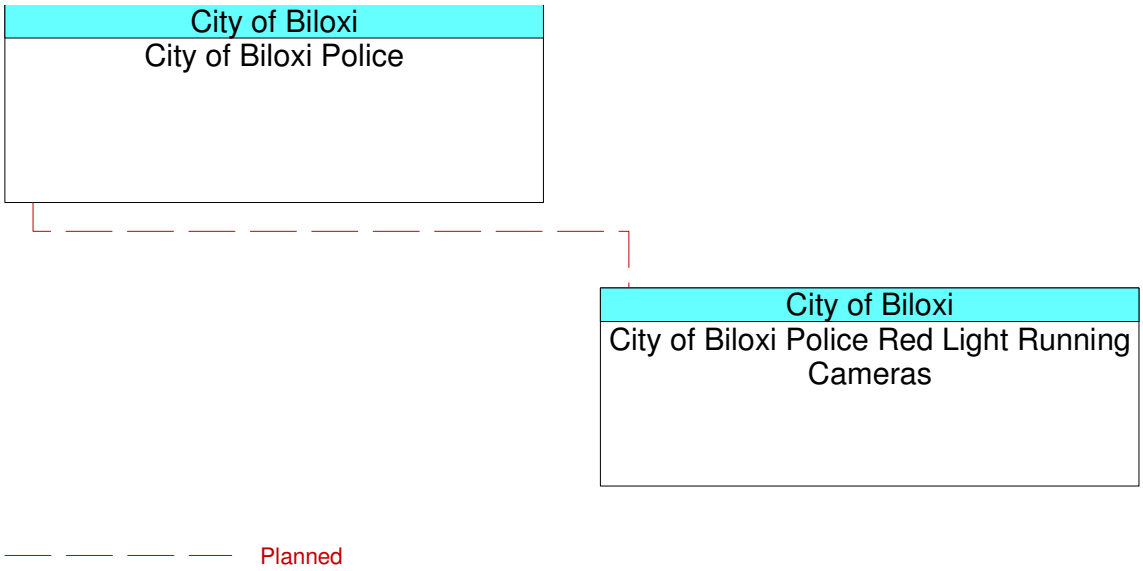
City of Biloxi
City of Biloxi Police
City of Biloxi
City of Biloxi Police Red Light Running Cameras
Planned

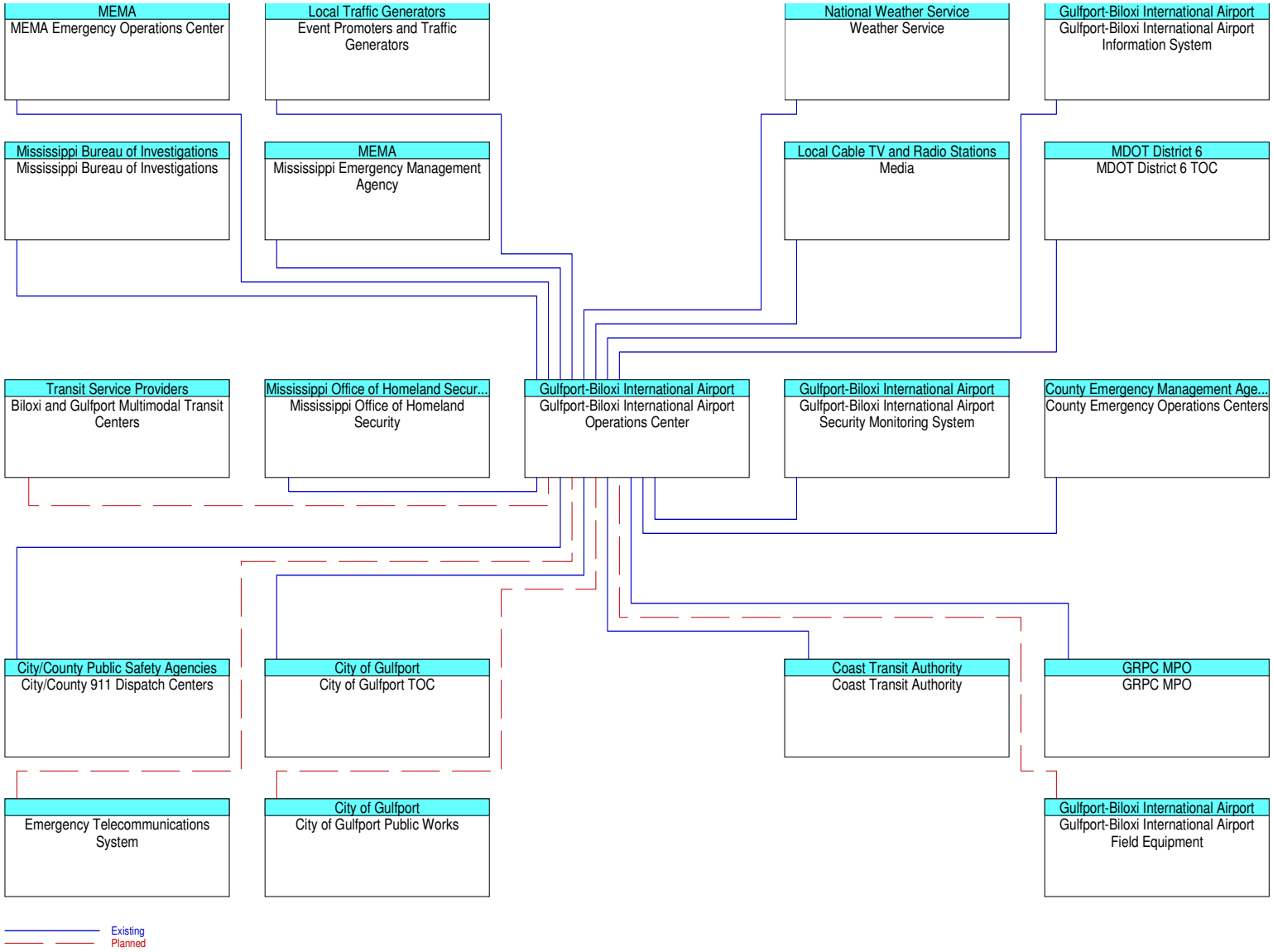
MEMA
MEMA Emergency Operations Center
Local Traffic Generators
Event Promoters and Traffic Generators
National Weather Service
Weather Service
Gulfport-Biloxi International Airport
Gulfport-Biloxi International Airport Information System
Mississippi Bureau of Investigations
Mississippi Bureau of Investigations
MEMA
Mississippi Emergency Management Agency
Local Cable TV and Radio Stations
Media
MDOT District 6
MDOT District 6 TOC
Transit Service Providers
Biloxi and Gulfport Multimodal Transit Centers
Mississippi Office of Homeland Secur...
Mississippi Office of Homeland Security
Gulfport-Biloxi International Airport
Gulfport-Biloxi International Airport Operations Center
Gulfport-Biloxi International Airport
Gulfport-Biloxi International Airport Security Monitoring System
County Emergency Management Age...
County Emergency Operations Centers
City/County Public Safety Agencies
City/County 911 Dispatch Centers
City of Gulfport
City of Gulfport TOC
Coast Transit Authority
Coast Transit Authority
GRPC MPO
GRPC MPO
Emergency Telecommunications System
City of Gulfport
City of Gulfport Public Works
Gulfport-Biloxi International Airport
Gulfport-Biloxi International Airport Field Equipment
Existing
Planned

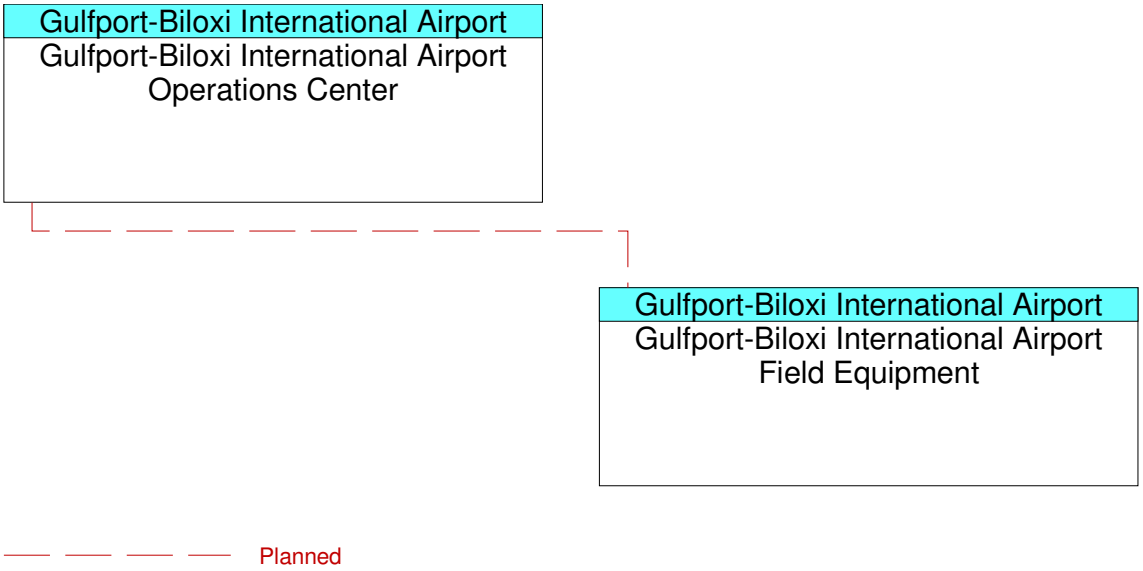
Gulfport-Biloxi International Airport
Gulfport-Biloxi International Airport Operations Center
Gulfport-Biloxi International Airport
Gulfport-Biloxi International Airport Field Equipment
Planned

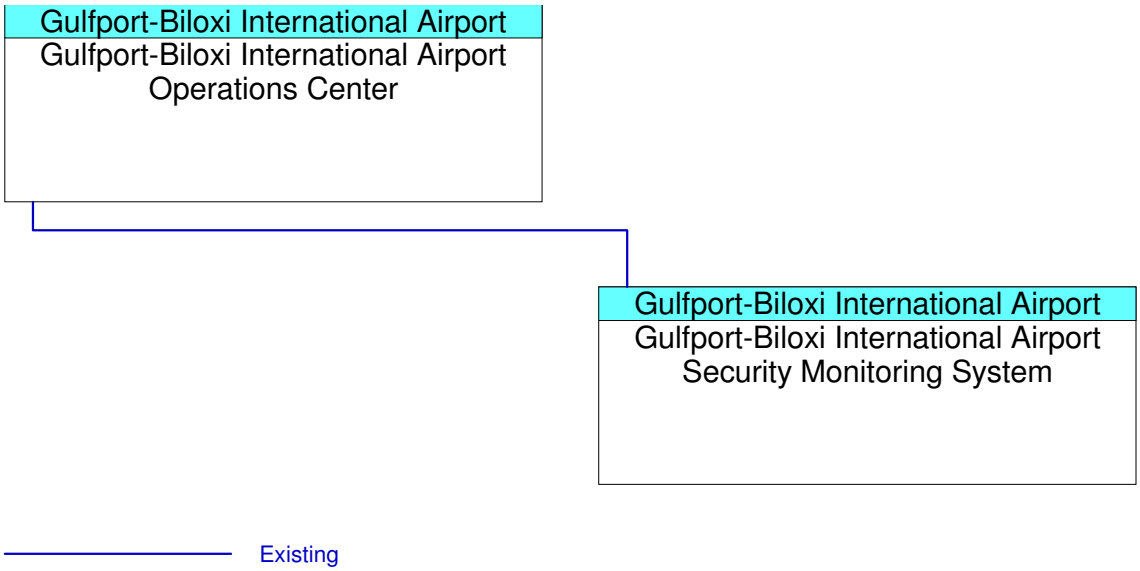
Gulfport-Biloxi International Airport
Gulfport-Biloxi International Airport Operations Center
Gulfport-Biloxi International Airport
Gulfport-Biloxi International Airport Security Monitoring System
Existing

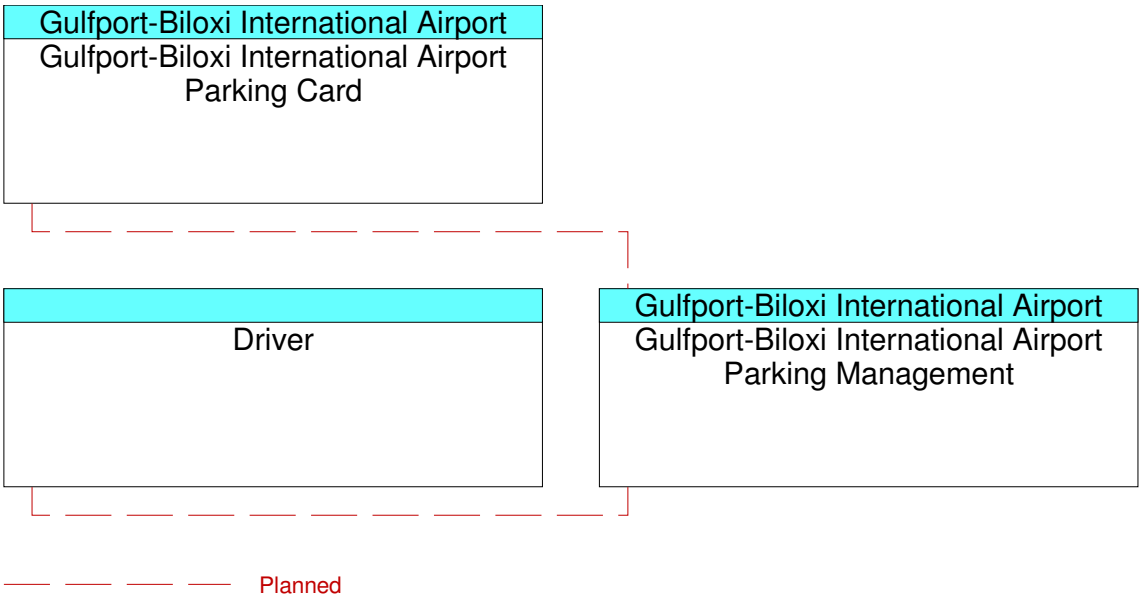
Gulfport-Biloxi International Airport
Gulfport-Biloxi International Airport Parking Card
Driver
Gulfport-Biloxi International Airport
Gulfport-Biloxi International Airport Parking Management
Planned

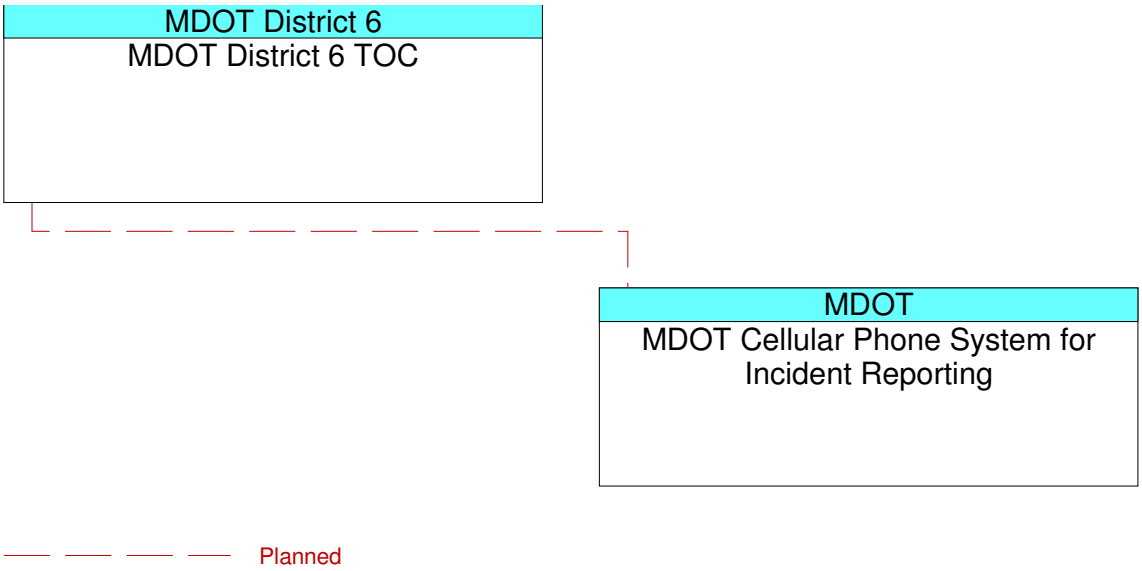
MDOT District 6
MDOT District 6 TOC
MDOT
MDOT Cellular Phone System for Incident Reporting
Planned

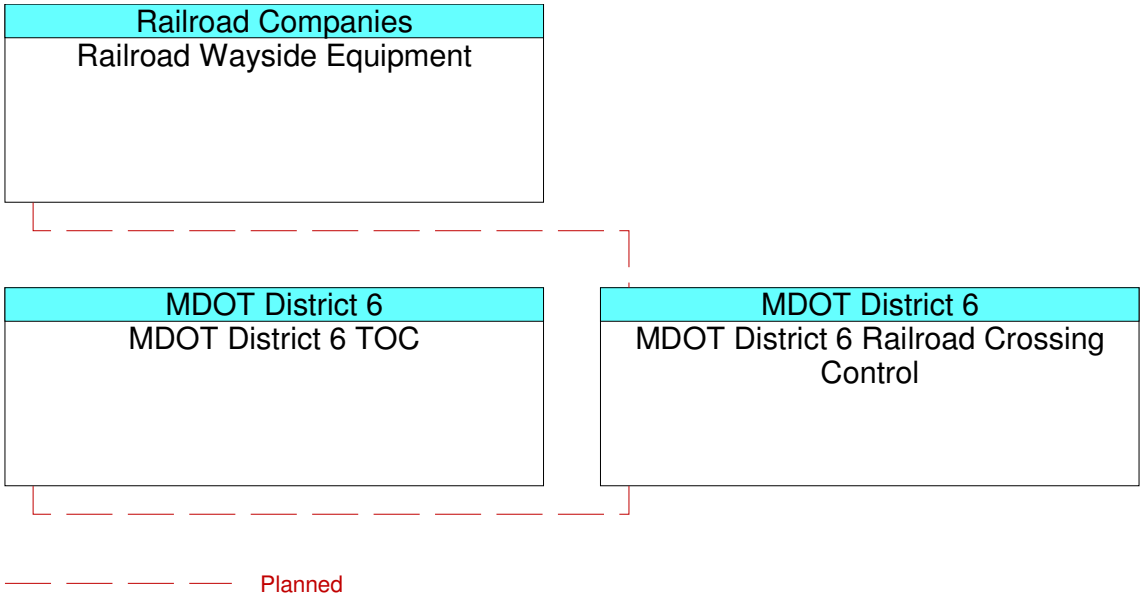
Railroad Companies
Railroad Wayside Equipment
MDOT District 6
MDOT District 6 TOC
MDOT District 6
MDOT District 6 Railroad Crossing Control
Planned

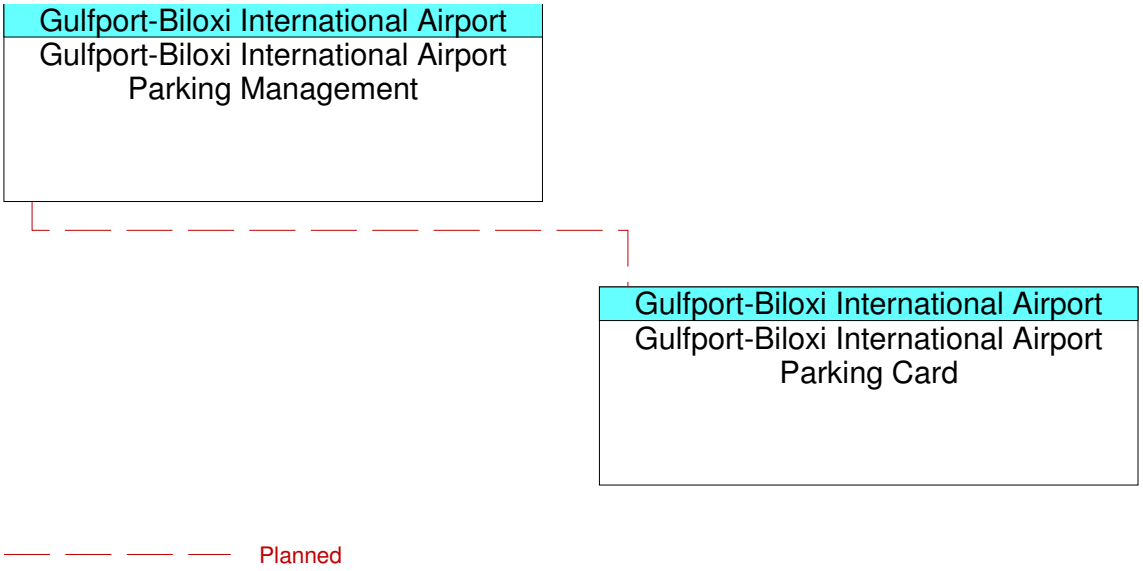
Gulfport-Biloxi International Airport
Gulfport-Biloxi International Airport Parking Management
Gulfport-Biloxi International Airport
Gulfport-Biloxi International Airport Parking Card
Planned

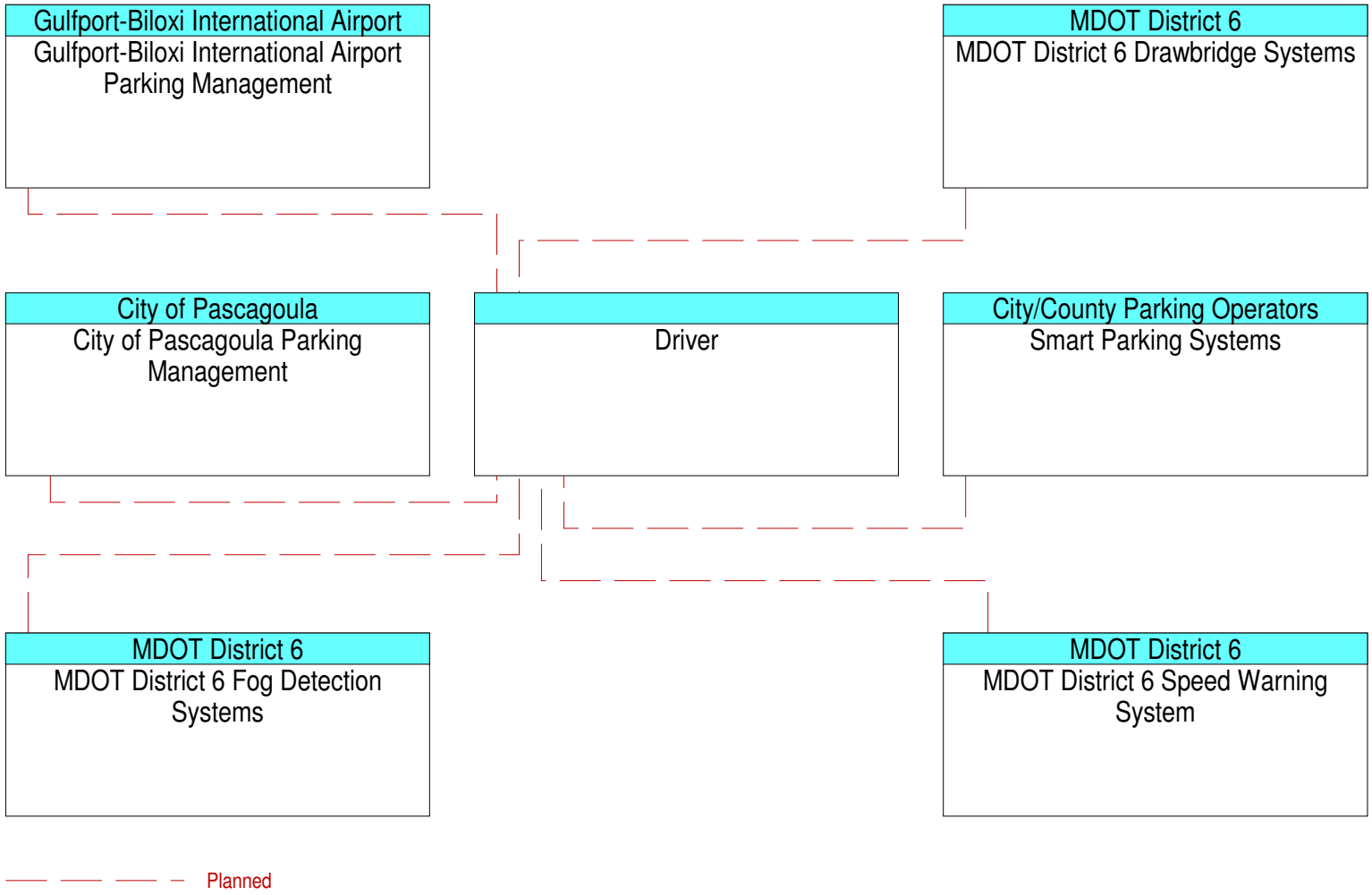
Gulfport-Biloxi International Airport
Gulfport-Biloxi International Airport Parking Management
MDOT District 6
MDOT District 6 Drawbridge Systems
City of Pascagoula
City of Pascagoula Parking Management
Driver
City/County Parking Operators
Smart Parking Systems
MDOT District 6
MDOT District 6 Fog Detection Systems
MDOT District 6
MDOT District 6 Speed Warning System
Planned

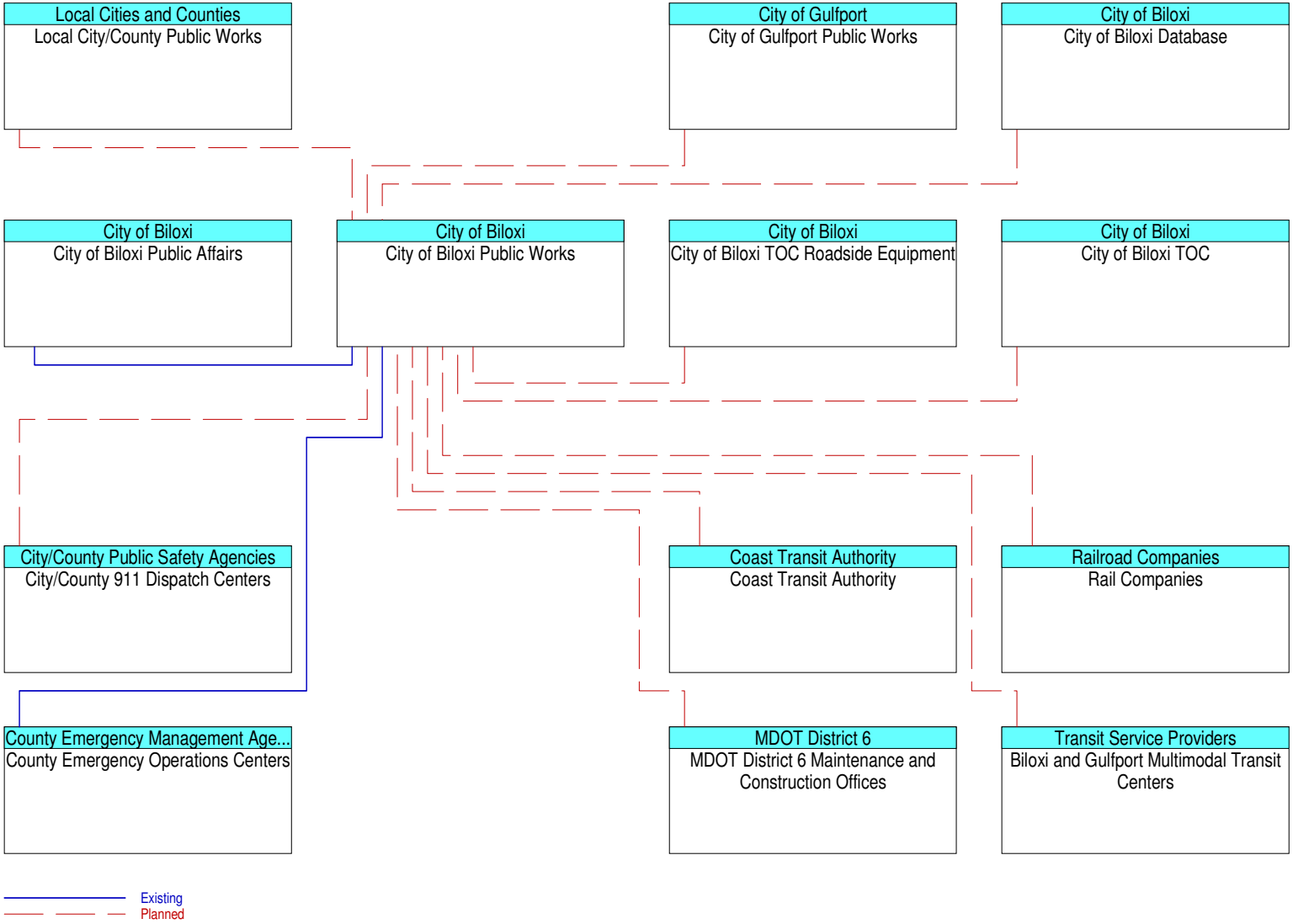
Local Cities and Counties
Local City/County Public Works
City of Gulfport
City of Gulfport Public Works
City of Biloxi
City of Biloxi Database
City of Biloxi
City of Biloxi Public Affairs
City of Biloxi
City of Biloxi Public Works
City of Biloxi
City of Biloxi TOC Roadside Equipment
City of Biloxi
City of Biloxi TOC
City/County Public Safety Agencies
City/County 911 Dispatch Centers
Coast Transit Authority
Coast Transit Authority
Railroad Companies
Rail Companies
County Emergency Management Age...
County Emergency Operations Centers
MDOT District 6
MDOT District 6 Maintenance and Construction Offices
Transit Service Providers
Biloxi and Gulfport Multimodal Transit Centers
Existing
Planned

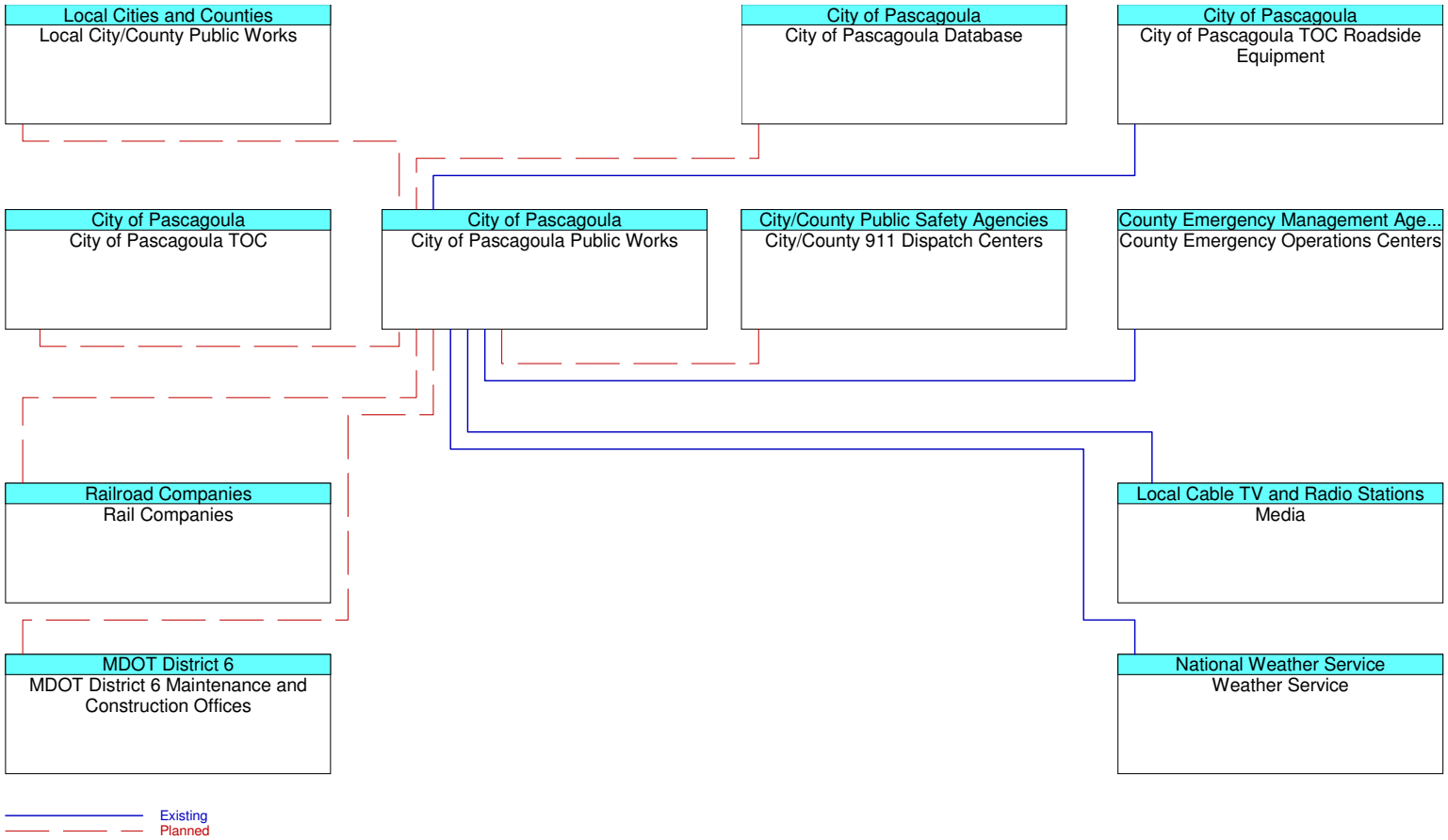
Local Cities and Counties
Local City/County Public Works
City of Pascagoula
City of Pascagoula Database
City of Pascagoula
City of Pascagoula TOC Roadside Equipment
City of Pascagoula
City of Pascagoula TOC
City of Pascagoula
City of Pascagoula Public Works
City/County Public Safety Agencies
City/County 911 Dispatch Centers
County Emergency Management Age...
County Emergency Operations Centers
Railroad Companies
Rail Companies
Local Cable TV and Radio Stations
Media
MDOT District 6
MDOT District 6 Maintenance and Construction Offices
National Weather Service
Weather Service
Existing
Planned

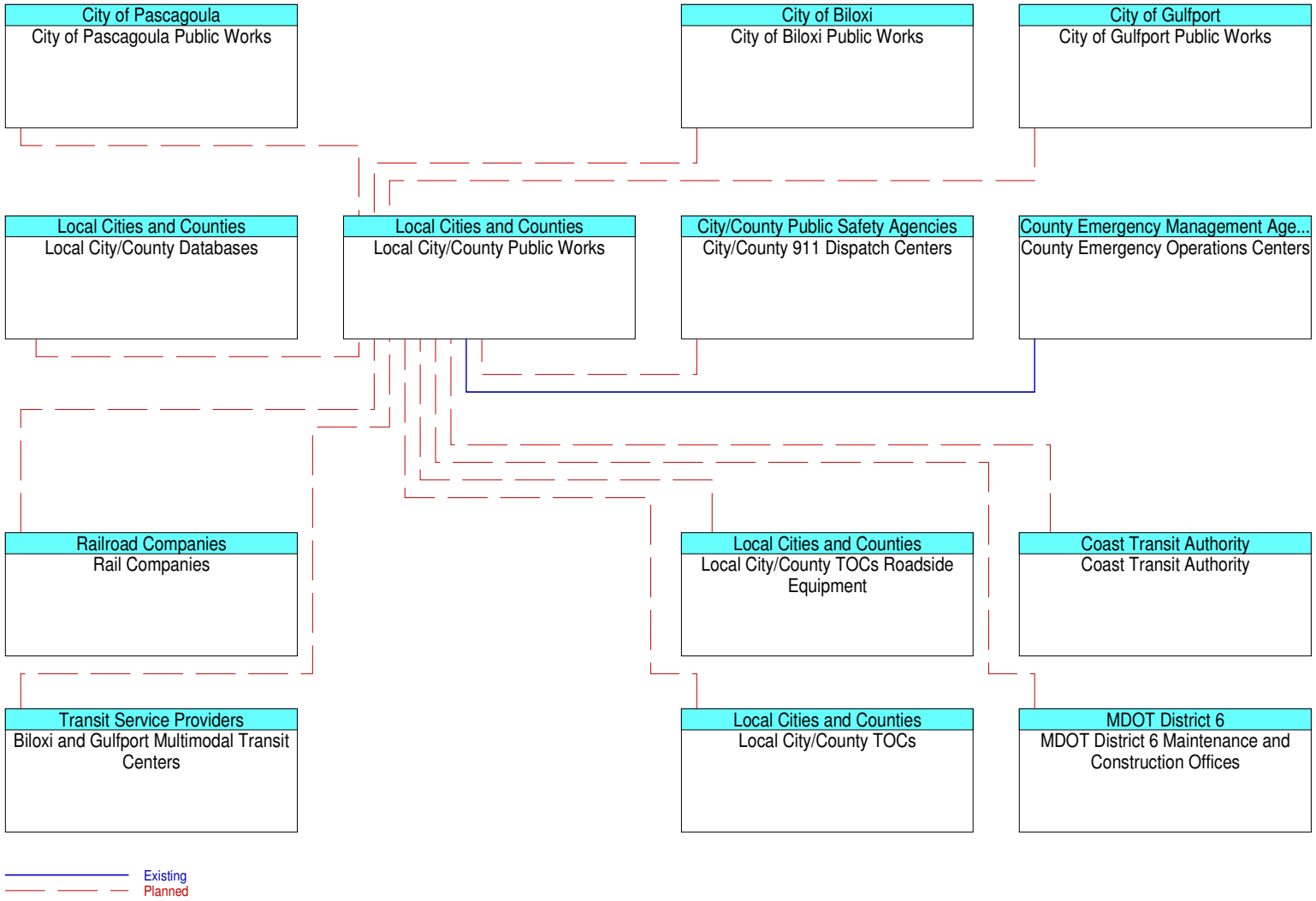
City of Pascagoula
City of Pascagoula Public Works
City of Biloxi
City of Biloxi Public Works
City of Gulfport
City of Gulfport Public Works
Local Cities and Counties
Local City/County Databases
Local Cities and Counties
Local City/County Public Works
City/County Public Safety Agencies
City/County 911 Dispatch Centers
County Emergency Management Age...
County Emergency Operations Centers
Railroad Companies
Rail Companies
Local Cities and Counties
Local City/County TOCs Roadside Equipment
Coast Transit Authority
Coast Transit Authority
Transit Service Providers
Biloxi and Gulfport Multimodal Transit Centers
Local Cities and Counties
Local City/County TOCs
MDOT District 6
MDOT District 6 Maintenance and Construction Offices
Existing
Planned

# Appendix D: Architecture Flows

| Architecture Flow Name | Source | Destination | Status |
|---|---|---|---|
| incident notification | *HP Cellular Phone System | MHP Dispatch Centers | Existing |
| multimodal service data | AMTRAK | Biloxi and Gulfport Multimodal Transit Centers | Planned |
| multimodal service data | AMTRAK | Coast Transit Authority | Planned |
| transit multimodal information | Biloxi and Gulfport Multimodal Transit Centers | AMTRAK | Planned |
| broadcast information | Biloxi and Gulfport Multimodal Transit Centers | Biloxi and Gulfport Multimodal Transit Centers Kiosks | Planned |
| emergency traveler information | Biloxi and Gulfport Multimodal Transit Centers | Biloxi and Gulfport Multimodal Transit Centers Kiosks | Planned |
| transit fare information | Biloxi and Gulfport Multimodal Transit Centers | Biloxi and Gulfport Multimodal Transit Centers Kiosks | Planned |
| transit traveler information | Biloxi and Gulfport Multimodal Transit Centers | Biloxi and Gulfport Multimodal Transit Centers Kiosks | Planned |
| work plan feedback | Biloxi and Gulfport Multimodal Transit Centers | City of Biloxi Public Works | Planned |
| emergency traffic control request | Biloxi and Gulfport Multimodal Transit Centers | City of Biloxi TOC | Planned |
| emergency transit schedule information | Biloxi and Gulfport Multimodal Transit Centers | City of Biloxi TOC | Planned |
| transit control priority request | Biloxi and Gulfport Multimodal Transit Centers | City of Biloxi TOC | Planned |
| transit system data | Biloxi and Gulfport Multimodal Transit Centers | City of Biloxi TOC | Planned |
| work plan feedback | Biloxi and Gulfport Multimodal Transit Centers | City of Gulfport Public Works | Planned |
| emergency traffic control request | Biloxi and Gulfport Multimodal Transit Centers | City of Gulfport TOC | Planned |
| emergency transit schedule information | Biloxi and Gulfport Multimodal Transit Centers | City of Gulfport TOC | Planned |
| traffic control priority request | Biloxi and Gulfport Multimodal Transit Centers | City of Gulfport TOC | Planned |
| transit system data | Biloxi and Gulfport Multimodal Transit Centers | City of Gulfport TOC | Planned |
| emergency plan coordination | Biloxi and Gulfport Multimodal Transit Centers | City/County 911 Dispatch Centers | Planned |
| emergency transit schedule information | Biloxi and Gulfport Multimodal Transit Centers | City/County 911 Dispatch Centers | Planned |
| emergency transit service response | Biloxi and Gulfport Multimodal Transit Centers | City/County 911 Dispatch Centers | Planned |
| payment violation notification | Biloxi and Gulfport Multimodal Transit Centers | City/County 911 Dispatch Centers | Planned |
| transit emergency data | Biloxi and Gulfport Multimodal Transit Centers | City/County 911 Dispatch Centers | Planned |
| threat information coordination | Biloxi and Gulfport Multimodal Transit Centers | Coast Transit Authority | Planned |
| transit fare coordination | Biloxi and Gulfport Multimodal Transit Centers | Coast Transit Authority | Planned |
| transit service coordination | Biloxi and Gulfport Multimodal Transit Centers | Coast Transit Authority | Planned |

| Architecture Flow Name | Source | Destination | Status |
|---|---|---|---|
| transit traveler information coordination | Biloxi and Gulfport Multimodal Transit Centers | Coast Transit Authority | Planned |
| alarm acknowledge | Biloxi and Gulfport Multimodal Transit Centers | Coast Transit Authority Vehicles | Planned |
| fare management information | Biloxi and Gulfport Multimodal Transit Centers | Coast Transit Authority Vehicles | Planned |
| secure area surveillance control | Biloxi and Gulfport Multimodal Transit Centers | Coast Transit Authority Vehicles | Planned |
| transit schedule information | Biloxi and Gulfport Multimodal Transit Centers | Coast Transit Authority Vehicles | Planned |
| transit traveler information | Biloxi and Gulfport Multimodal Transit Centers | Coast Transit Authority Vehicles | Planned |
| transit vehicle operator authentication update | Biloxi and Gulfport Multimodal Transit Centers | Coast Transit Authority Vehicles | Planned |
| transit vehicle operator information | Biloxi and Gulfport Multimodal Transit Centers | Coast Transit Authority Vehicles | Planned |
| alert status | Biloxi and Gulfport Multimodal Transit Centers | Coast Transit Authority Vehicles | Planned |
| emergency plan coordination | Biloxi and Gulfport Multimodal Transit Centers | County Emergency Operations Centers | Planned |
| emergency transit schedule information | Biloxi and Gulfport Multimodal Transit Centers | County Emergency Operations Centers | Planned |
| emergency transit service response | Biloxi and Gulfport Multimodal Transit Centers | County Emergency Operations Centers | Planned |
| threat information coordination | Biloxi and Gulfport Multimodal Transit Centers | County Emergency Operations Centers | Planned |
| transit emergency data | Biloxi and Gulfport Multimodal Transit Centers | County Emergency Operations Centers | Planned |
| transit system status assessment | Biloxi and Gulfport Multimodal Transit Centers | County Emergency Operations Centers | Planned |
| transit fare coordination | Biloxi and Gulfport Multimodal Transit Centers | Greyhound | Planned |
| transit service coordination | Biloxi and Gulfport Multimodal Transit Centers | Greyhound | Planned |
| transit traveler information coordination | Biloxi and Gulfport Multimodal Transit Centers | Greyhound | Planned |
| transit demand management response | Biloxi and Gulfport Multimodal Transit Centers | GRPC MPO | Planned |
| transit system data | Biloxi and Gulfport Multimodal Transit Centers | GRPC MPO | Planned |
| ISP coordination | Biloxi and Gulfport Multimodal Transit Centers | Gulfport-Biloxi International Airport Information System | Planned |
| transit and fare schedules | Biloxi and Gulfport Multimodal Transit Centers | Gulfport-Biloxi International Airport Information System | Planned |
| transit incident information | Biloxi and Gulfport Multimodal Transit Centers | Gulfport-Biloxi International Airport Information System | Planned |
| emergency plan coordination | Biloxi and Gulfport Multimodal Transit Centers | Gulfport-Biloxi International Airport Operations Center | Planned |
| emergency transit schedule information | Biloxi and Gulfport Multimodal Transit Centers | Gulfport-Biloxi International Airport Operations Center | Planned |

| Architecture Flow Name | Source | Destination | Status |
|---|---|---|---|
| emergency transit service response | Biloxi and Gulfport Multimodal Transit Centers | Gulfport-Biloxi International Airport Operations Center | Planned |
| threat information coordination | Biloxi and Gulfport Multimodal Transit Centers | Gulfport-Biloxi International Airport Operations Center | Planned |
| transit emergency data | Biloxi and Gulfport Multimodal Transit Centers | Gulfport-Biloxi International Airport Operations Center | Planned |
| transit multimodal information | Biloxi and Gulfport Multimodal Transit Centers | Gulfport-Biloxi International Airport Operations Center | Planned |
| work plan feedback | Biloxi and Gulfport Multimodal Transit Centers | Local City/County Public Works | Planned |
| emergency traffic control request | Biloxi and Gulfport Multimodal Transit Centers | MDOT District 6 TOC | Planned |
| emergency transit schedule information | Biloxi and Gulfport Multimodal Transit Centers | MDOT District 6 TOC | Planned |
| traffic control priority request | Biloxi and Gulfport Multimodal Transit Centers | MDOT District 6 TOC | Planned |
| transit system data | Biloxi and Gulfport Multimodal Transit Centers | MDOT District 6 TOC | Planned |
| transit incidents for media | Biloxi and Gulfport Multimodal Transit Centers | Media | Planned |
| transit information for media | Biloxi and Gulfport Multimodal Transit Centers | Media | Planned |
| alert status | Biloxi and Gulfport Multimodal Transit Centers | MEMA Emergency Operations Center | Planned |
| emergency plan coordination | Biloxi and Gulfport Multimodal Transit Centers | MEMA Emergency Operations Center | Planned |
| emergency transit schedule information | Biloxi and Gulfport Multimodal Transit Centers | MEMA Emergency Operations Center | Planned |
| emergency transit service response | Biloxi and Gulfport Multimodal Transit Centers | MEMA Emergency Operations Center | Planned |
| transit emergency data | Biloxi and Gulfport Multimodal Transit Centers | MEMA Emergency Operations Center | Planned |
| transit system status assessment | Biloxi and Gulfport Multimodal Transit Centers | MEMA Emergency Operations Center | Planned |
| emergency plan coordination | Biloxi and Gulfport Multimodal Transit Centers | MHP Dispatch Centers | Planned |
| emergency transit schedule information | Biloxi and Gulfport Multimodal Transit Centers | MHP Dispatch Centers | Planned |
| emergency transit service response | Biloxi and Gulfport Multimodal Transit Centers | MHP Dispatch Centers | Planned |
| transit emergency data | Biloxi and Gulfport Multimodal Transit Centers | MHP Dispatch Centers | Planned |
| alert status | Biloxi and Gulfport Multimodal Transit Centers | Mississippi Emergency Management Agency | Planned |
| emergency plan coordination | Biloxi and Gulfport Multimodal Transit Centers | Mississippi Emergency Management Agency | Planned |
| transit emergency data | Biloxi and Gulfport Multimodal Transit Centers | Mississippi Emergency Management Agency | Planned |
| alert status | Biloxi and Gulfport Multimodal Transit Centers | Mississippi Office of Homeland Security | Planned |
| emergency plan coordination | Biloxi and Gulfport Multimodal Transit Centers | Mississippi Office of Homeland Security | Planned |

| Architecture Flow Name | Source | Destination | Status |
|---|---|---|---|
| transit emergency data | Biloxi and Gulfport Multimodal Transit Centers | Mississippi Office of Homeland Security | Planned |
| transit fare coordination | Biloxi and Gulfport Multimodal Transit Centers | Other Transit Service Providers | Planned |
| transit service coordination | Biloxi and Gulfport Multimodal Transit Centers | Other Transit Service Providers | Planned |
| transit traveler information coordination | Biloxi and Gulfport Multimodal Transit Centers | Other Transit Service Providers | Planned |
| broadcast information | Biloxi and Gulfport Multimodal Transit Centers | User Personal Computing Devices | Planned |
| emergency traveler information | Biloxi and Gulfport Multimodal Transit Centers | User Personal Computing Devices | Planned |
| personal transit information | Biloxi and Gulfport Multimodal Transit Centers | User Personal Computing Devices | Planned |
| emergency traveler information request | Biloxi and Gulfport Multimodal Transit Centers Kiosks | Biloxi and Gulfport Multimodal Transit Centers | Planned |
| transit fare and passenger status | Biloxi and Gulfport Multimodal Transit Centers Kiosks | Biloxi and Gulfport Multimodal Transit Centers | Planned |
| transit information user request | Biloxi and Gulfport Multimodal Transit Centers Kiosks | Biloxi and Gulfport Multimodal Transit Centers | Planned |
| request for payment | Biloxi and Gulfport Multimodal Transit Centers Kiosks | Coast Transit Authority Transit Card | Planned |
| archive requests | City of Biloxi Database | City of Biloxi Police | Planned |
| archive status | City of Biloxi Database | City of Biloxi Police | Planned |
| archive requests | City of Biloxi Database | City of Biloxi Public Affairs | Planned |
| archive status | City of Biloxi Database | City of Biloxi Public Affairs | Planned |
| archive requests | City of Biloxi Database | City of Biloxi Public Works | Planned |
| archive status | City of Biloxi Database | City of Biloxi Public Works | Planned |
| archive status | City of Biloxi Database | City of Biloxi TOC | Planned |
| archive requests | City of Biloxi Database | City of Biloxi TOC | Planned |
| data collection and monitoring control | City of Biloxi Database | City of Biloxi TOC Roadside Equipment | Planned |
| archive requests | City of Biloxi Database | City of Biloxi Website | Planned |
| archive status | City of Biloxi Database | City of Biloxi Website | Planned |
| archive coordination | City of Biloxi Database | GRPC MPO Databases | Planned |
| local signal preemption request | City of Biloxi Emergency Vehicles | City of Biloxi TOC Roadside Equipment | Planned |
| emergency dispatch response | City of Biloxi Emergency Vehicles | City/County 911 Dispatch Centers | Existing |
| emergency vehicle tracking data | City of Biloxi Emergency Vehicles | City/County 911 Dispatch Centers | Planned |
| incident status | City of Biloxi Emergency Vehicles | City/County 911 Dispatch Centers | Existing |
| emergency archive data | City of Biloxi Police | City of Biloxi Database | Planned |
| incident information | City of Biloxi Police | City of Biloxi Public Affairs | Existing |
| traffic violation notification | City of Biloxi Police Red Light Running Cameras | City of Biloxi Police | Planned |
| traveler archive data | City of Biloxi Public Affairs | City of Biloxi Database | Planned |
| ISP coordination | City of Biloxi Public Affairs | City of Biloxi Database | Existing |
| traveler information for media | City of Biloxi Public Affairs | Media | Existing |
| broadcast information | City of Biloxi Public Affairs | User Personal Computing Devices | Existing |

| Architecture Flow Name | Source | Destination | Status |
|---|---|---|---|
| maintenance and construction work plans | City of Biloxi Public Works | Biloxi and Gulfport Multimodal Transit Centers | Planned |
| work zone information | City of Biloxi Public Works | Biloxi and Gulfport Multimodal Transit Centers | Planned |
| maintenance and construction archive data | City of Biloxi Public Works | City of Biloxi Database | Planned |
| work zone information | City of Biloxi Public Works | City of Biloxi Public Affairs | Existing |
| equipment maintenance status | City of Biloxi Public Works | City of Biloxi TOC | Planned |
| maintenance and construction work plans | City of Biloxi Public Works | City of Biloxi TOC | Planned |
| work zone information | City of Biloxi Public Works | City of Biloxi TOC | Planned |
| roadway information system data | City of Biloxi Public Works | City of Biloxi TOC Roadside Equipment | Planned |
| work plan coordination | City of Biloxi Public Works | City of Gulfport Public Works | Planned |
| current asset restrictions | City of Biloxi Public Works | City/County 911 Dispatch Centers | Planned |
| maintenance and construction work plans | City of Biloxi Public Works | City/County 911 Dispatch Centers | Planned |
| work zone information | City of Biloxi Public Works | City/County 911 Dispatch Centers | Planned |
| maintenance and construction work plans | City of Biloxi Public Works | Coast Transit Authority | Planned |
| work zone information | City of Biloxi Public Works | Coast Transit Authority | Planned |
| alert status | City of Biloxi Public Works | County Emergency Operations Centers | Existing |
| emergency plan coordination | City of Biloxi Public Works | County Emergency Operations Centers | Existing |
| maintenance and construction resource response | City of Biloxi Public Works | County Emergency Operations Centers | Planned |
| work plan coordination | City of Biloxi Public Works | Local City/County Public Works | Planned |
| work plan coordination | City of Biloxi Public Works | MDOT District 6 Maintenance and Construction Offices | Planned |
| maintenance and construction work plans | City of Biloxi Public Works | Rail Companies | Planned |
| work plan feedback | City of Biloxi Public Works | Rail Companies | Planned |
| emergency traffic control information | City of Biloxi TOC | Biloxi and Gulfport Multimodal Transit Centers | Planned |
| request transit information | City of Biloxi TOC | Biloxi and Gulfport Multimodal Transit Centers | Planned |
| road network conditions | City of Biloxi TOC | Biloxi and Gulfport Multimodal Transit Centers | Planned |
| traffic control priority status | City of Biloxi TOC | Biloxi and Gulfport Multimodal Transit Centers | Planned |
| traffic archive data | City of Biloxi TOC | City of Biloxi Database | Planned |
| road network conditions | City of Biloxi TOC | City of Biloxi Public Affairs | Existing |
| field equipment status | City of Biloxi TOC | City of Biloxi Public Works | Planned |
| work plan feedback | City of Biloxi TOC | City of Biloxi Public Works | Planned |
| hri control data | City of Biloxi TOC | City of Biloxi TOC Roadside Equipment | Planned |

| Architecture Flow Name | Source | Destination | Status |
|---|---|---|---|
| hri request | City of Biloxi TOC | City of Biloxi TOC Roadside Equipment | Planned |
| roadway information system data | City of Biloxi TOC | City of Biloxi TOC Roadside Equipment | Planned |
| signal control data | City of Biloxi TOC | City of Biloxi TOC Roadside Equipment | Planned |
| traffic sensor control | City of Biloxi TOC | City of Biloxi TOC Roadside Equipment | Planned |
| video surveillance control | City of Biloxi TOC | City of Biloxi TOC Roadside Equipment | Planned |
| emergency plan coordination | City of Biloxi TOC | City/County 911 Dispatch Centers | Existing |
| emergency traffic control information | City of Biloxi TOC | City/County 911 Dispatch Centers | Planned |
| incident information | City of Biloxi TOC | City/County 911 Dispatch Centers | Existing |
| resource deployment status | City of Biloxi TOC | City/County 911 Dispatch Centers | Planned |
| road network conditions | City of Biloxi TOC | City/County 911 Dispatch Centers | Planned |
| traffic images | City of Biloxi TOC | City/County 911 Dispatch Centers | Planned |
| request transit information | City of Biloxi TOC | Coast Transit Authority | Planned |
| road network conditions | City of Biloxi TOC | Coast Transit Authority | Planned |
| traffic control priority status | City of Biloxi TOC | Coast Transit Authority | Planned |
| alert status | City of Biloxi TOC | County Emergency Operations Centers | Existing |
| emergency plan coordination | City of Biloxi TOC | County Emergency Operations Centers | Existing |
| emergency traffic control information | City of Biloxi TOC | County Emergency Operations Centers | Planned |
| resource deployment status | City of Biloxi TOC | County Emergency Operations Centers | Planned |
| road network conditions | City of Biloxi TOC | County Emergency Operations Centers | Planned |
| road network status assessment | City of Biloxi TOC | County Emergency Operations Centers | Planned |
| traffic images | City of Biloxi TOC | County Emergency Operations Centers | Planned |
| event confirmation | City of Biloxi TOC | Event Promoters and Traffic Generators | Existing |
| traffic information coordination | City of Biloxi TOC | GRPC MPO | Existing |
| intermodal freight traffic confirmation | City of Biloxi TOC | Intermodal Rail Freight Facility | Planned |
| traffic control coordination | City of Biloxi TOC | MDOT District 6 TOC | Planned |
| traffic information coordination | City of Biloxi TOC | MDOT District 6 TOC | Planned |
| hri advisories | City of Biloxi TOC | Rail Companies | Existing |

| Architecture Flow Name | Source | Destination | Status |
|---|---|---|---|
| roadside archive data | City of Biloxi TOC Roadside Equipment | City of Biloxi Database | Planned |
| roadway information system status | City of Biloxi TOC Roadside Equipment | City of Biloxi Public Works | Planned |
| hri status | City of Biloxi TOC Roadside Equipment | City of Biloxi TOC | Planned |
| request for right-of-way | City of Biloxi TOC Roadside Equipment | City of Biloxi TOC | Planned |
| roadway information system status | City of Biloxi TOC Roadside Equipment | City of Biloxi TOC | Planned |
| signal control status | City of Biloxi TOC Roadside Equipment | City of Biloxi TOC | Planned |
| traffic flow | City of Biloxi TOC Roadside Equipment | City of Biloxi TOC | Planned |
| traffic images | City of Biloxi TOC Roadside Equipment | City of Biloxi TOC | Planned |
| hri operational status | City of Biloxi TOC Roadside Equipment | Railroad Wayside Equipment | Existing |
| traveler archive data | City of Biloxi Website | City of Biloxi Database | Planned |
| ISP coordination | City of Biloxi Website | City of Biloxi Public Affairs | Existing |
| broadcast information | City of Biloxi Website | User Personal Computing Devices | Existing |
| archive requests | City of Gulfport Database | City of Gulfport Public Works | Planned |
| archive status | City of Gulfport Database | City of Gulfport Public Works | Planned |
| archive requests | City of Gulfport Database | City of Gulfport TOC | Planned |
| archive status | City of Gulfport Database | City of Gulfport TOC | Planned |
| data collection and monitoring control | City of Gulfport Database | City of Gulfport TOC Roadside Equipment | Existing |
| archive requests | City of Gulfport Database | City/County 911 Dispatch Centers | Planned |
| archive status | City of Gulfport Database | City/County 911 Dispatch Centers | Planned |
| archive coordination | City of Gulfport Database | GRPC MPO Databases | Planned |
| local signal preemption request | City of Gulfport Emergency Vehicles | City of Gulfport TOC Roadside Equipment | Existing |
| emergency dispatch response | City of Gulfport Emergency Vehicles | City/County 911 Dispatch Centers | Existing |
| emergency vehicle tracking data | City of Gulfport Emergency Vehicles | City/County 911 Dispatch Centers | Planned |
| incident status | City of Gulfport Emergency Vehicles | City/County 911 Dispatch Centers | Existing |
| maintenance and construction work plans | City of Gulfport Public Works | Biloxi and Gulfport Multimodal Transit Centers | Planned |
| work zone information | City of Gulfport Public Works | Biloxi and Gulfport Multimodal Transit Centers | Planned |
| work plan coordination | City of Gulfport Public Works | City of Biloxi Public Works | Planned |
| maintenance and construction archive data | City of Gulfport Public Works | City of Gulfport Database | Planned |
| roadway information system data | City of Gulfport Public Works | City of Gulfport Public Works Field Devices | Planned |
| speed monitoring control | City of Gulfport Public Works | City of Gulfport Public Works Field Devices | Existing |
| equipment maintenance status | City of Gulfport Public Works | City of Gulfport TOC | Existing |

| Architecture Flow Name | Source | Destination | Status |
|---|---|---|---|
| maintenance and construction work plans | City of Gulfport Public Works | City of Gulfport TOC | Planned |
| work zone information | City of Gulfport Public Works | City of Gulfport TOC | Planned |
| current asset restrictions | City of Gulfport Public Works | City/County 911 Dispatch Centers | Planned |
| maintenance and construction work plans | City of Gulfport Public Works | City/County 911 Dispatch Centers | Planned |
| work zone information | City of Gulfport Public Works | City/County 911 Dispatch Centers | Planned |
| maintenance and construction work plans | City of Gulfport Public Works | Coast Transit Authority | Planned |
| work zone information | City of Gulfport Public Works | Coast Transit Authority | Planned |
| alert status | City of Gulfport Public Works | County Emergency Operations Centers | Existing |
| emergency plan coordination | City of Gulfport Public Works | County Emergency Operations Centers | Existing |
| maintenance and construction resource response | City of Gulfport Public Works | County Emergency Operations Centers | Planned |
| maintenance and construction work plans | City of Gulfport Public Works | Gulfport-Biloxi International Airport Operations Center | Planned |
| work zone information | City of Gulfport Public Works | Gulfport-Biloxi International Airport Operations Center | Planned |
| work plan coordination | City of Gulfport Public Works | Local City/County Public Works | Planned |
| work plan coordination | City of Gulfport Public Works | MDOT District 6 Maintenance and Construction Offices | Planned |
| maintenance and construction work plans | City of Gulfport Public Works | Rail Companies | Planned |
| work plan feedback | City of Gulfport Public Works | Rail Companies | Planned |
| roadway information system status | City of Gulfport Public Works Field Devices | City of Gulfport Public Works | Planned |
| speed monitoring information | City of Gulfport Public Works Field Devices | City of Gulfport Public Works | Existing |
| roadway information system status | City of Gulfport Public Works Field Devices | City of Gulfport TOC | Planned |
| emergency traffic control information | City of Gulfport TOC | Biloxi and Gulfport Multimodal Transit Centers | Planned |
| request transit information | City of Gulfport TOC | Biloxi and Gulfport Multimodal Transit Centers | Planned |
| road network conditions | City of Gulfport TOC | Biloxi and Gulfport Multimodal Transit Centers | Planned |
| traffic control priority status | City of Gulfport TOC | Biloxi and Gulfport Multimodal Transit Centers | Planned |
| traffic archive data | City of Gulfport TOC | City of Gulfport Database | Planned |
| field equipment status | City of Gulfport TOC | City of Gulfport Public Works | Planned |
| work plan feedback | City of Gulfport TOC | City of Gulfport Public Works | Planned |
| roadway information system data | City of Gulfport TOC | City of Gulfport Public Works Field Devices | Planned |
| hri control data | City of Gulfport TOC | City of Gulfport TOC Roadside Equipment | Existing |
| hri request | City of Gulfport TOC | City of Gulfport TOC Roadside Equipment | Existing |
| roadway information system data | City of Gulfport TOC | City of Gulfport TOC Roadside Equipment | Planned |

| Architecture Flow Name | Source | Destination | Status |
|---|---|---|---|
| signal control data | City of Gulfport TOC | City of Gulfport TOC Roadside Equipment | Existing |
| traffic sensor control | City of Gulfport TOC | City of Gulfport TOC Roadside Equipment | Existing |
| video surveillance control | City of Gulfport TOC | City of Gulfport TOC Roadside Equipment | Planned |
| emergency plan coordination | City of Gulfport TOC | City/County 911 Dispatch Centers | Existing |
| emergency traffic control information | City of Gulfport TOC | City/County 911 Dispatch Centers | Planned |
| incident information | City of Gulfport TOC | City/County 911 Dispatch Centers | Existing |
| resource deployment status | City of Gulfport TOC | City/County 911 Dispatch Centers | Planned |
| road network conditions | City of Gulfport TOC | City/County 911 Dispatch Centers | Planned |
| traffic images | City of Gulfport TOC | City/County 911 Dispatch Centers | Planned |
| request transit information | City of Gulfport TOC | Coast Transit Authority | Planned |
| road network conditions | City of Gulfport TOC | Coast Transit Authority | Planned |
| traffic control priority status | City of Gulfport TOC | Coast Transit Authority | Planned |
| alert status | City of Gulfport TOC | County Emergency Operations Centers | Existing |
| emergency plan coordination | City of Gulfport TOC | County Emergency Operations Centers | Existing |
| emergency traffic control information | City of Gulfport TOC | County Emergency Operations Centers | Planned |
| resource deployment status | City of Gulfport TOC | County Emergency Operations Centers | Planned |
| road network conditions | City of Gulfport TOC | County Emergency Operations Centers | Planned |
| road network status assessment | City of Gulfport TOC | County Emergency Operations Centers | Planned |
| traffic images | City of Gulfport TOC | County Emergency Operations Centers | Planned |
| event confirmation | City of Gulfport TOC | Event Promoters and Traffic Generators | Existing |
| traffic information coordination | City of Gulfport TOC | GRPC MPO | Existing |
| road network conditions | City of Gulfport TOC | Gulfport-Biloxi International Airport Information System | Planned |
| emergency plan coordination | City of Gulfport TOC | Gulfport-Biloxi International Airport Operations Center | Existing |
| emergency traffic control information | City of Gulfport TOC | Gulfport-Biloxi International Airport Operations Center | Planned |
| incident information | City of Gulfport TOC | Gulfport-Biloxi International Airport Operations Center | Existing |
| road network conditions | City of Gulfport TOC | Gulfport-Biloxi International Airport Operations Center | Planned |
| intermodal freight traffic confirmation | City of Gulfport TOC | Intermodal Rail Freight Facility | Planned |

| Architecture Flow Name | Source | Destination | Status |
|---|---|---|---|
| traffic control coordination | City of Gulfport TOC | MDOT District 6 TOC | Planned |
| traffic information coordination | City of Gulfport TOC | MDOT District 6 TOC | Planned |
| hri advisories | City of Gulfport TOC | Rail Companies | Existing |
| roadside archive data | City of Gulfport TOC Roadside Equipment | City of Gulfport Database | Existing |
| hri status | City of Gulfport TOC Roadside Equipment | City of Gulfport TOC | Existing |
| request for right-of-way | City of Gulfport TOC Roadside Equipment | City of Gulfport TOC | Existing |
| roadway information system status | City of Gulfport TOC Roadside Equipment | City of Gulfport TOC | Planned |
| signal control status | City of Gulfport TOC Roadside Equipment | City of Gulfport TOC | Existing |
| traffic flow | City of Gulfport TOC Roadside Equipment | City of Gulfport TOC | Existing |
| traffic images | City of Gulfport TOC Roadside Equipment | City of Gulfport TOC | Planned |
| hri operational status | City of Gulfport TOC Roadside Equipment | Railroad Wayside Equipment | Existing |
| archive requests | City of Pascagoula Database | City of Pascagoula Public Works | Planned |
| archive status | City of Pascagoula Database | City of Pascagoula Public Works | Planned |
| archive requests | City of Pascagoula Database | City of Pascagoula TOC | Planned |
| archive status | City of Pascagoula Database | City of Pascagoula TOC | Planned |
| archive requests | City of Pascagoula Database | City/County 911 Dispatch Centers | Planned |
| archive status | City of Pascagoula Database | City/County 911 Dispatch Centers | Planned |
| archive coordination | City of Pascagoula Database | GRPC MPO Databases | Planned |
| local signal preemption request | City of Pascagoula Emergency Vehicles | City of Pascagoula TOC Roadside Equipment | Planned |
| emergency dispatch response | City of Pascagoula Emergency Vehicles | City/County 911 Dispatch Centers | Existing |
| emergency vehicle tracking data | City of Pascagoula Emergency Vehicles | City/County 911 Dispatch Centers | Planned |
| incident status | City of Pascagoula Emergency Vehicles | City/County 911 Dispatch Centers | Existing |
| driver parking information | City of Pascagoula Parking Management | Driver | Planned |
| maintenance and construction archive data | City of Pascagoula Public Works | City of Pascagoula Database | Planned |
| maintenance and construction work plans | City of Pascagoula Public Works | City of Pascagoula TOC | Planned |
| work zone information | City of Pascagoula Public Works | City of Pascagoula TOC | Planned |
| roadway information system data | City of Pascagoula Public Works | City of Pascagoula TOC Roadside Equipment | Existing |
| current asset restrictions | City of Pascagoula Public Works | City/County 911 Dispatch Centers | Planned |
| maintenance and construction work plans | City of Pascagoula Public Works | City/County 911 Dispatch Centers | Planned |
| work zone information | City of Pascagoula Public Works | City/County 911 Dispatch Centers | Planned |
| alert status | City of Pascagoula Public Works | County Emergency Operations Centers | Existing |

| Architecture Flow Name | Source | Destination | Status |
|---|---|---|---|
| emergency plan coordination | City of Pascagoula Public Works | County Emergency Operations Centers | Existing |
| maintenance and construction resource response | City of Pascagoula Public Works | County Emergency Operations Centers | Planned |
| work plan coordination | City of Pascagoula Public Works | Local City/County Public Works | Planned |
| work plan coordination | City of Pascagoula Public Works | MDOT District 6 Maintenance and Construction Offices | Planned |
| work zone information | City of Pascagoula Public Works | Media | Existing |
| maintenance and construction work plans | City of Pascagoula Public Works | Rail Companies | Planned |
| work plan feedback | City of Pascagoula Public Works | Rail Companies | Planned |
| traffic archive data | City of Pascagoula TOC | City of Pascagoula Database | Planned |
| work plan feedback | City of Pascagoula TOC | City of Pascagoula Public Works | Planned |
| barrier system control | City of Pascagoula TOC | City of Pascagoula TOC Roadside Equipment | Planned |
| reversible lane control | City of Pascagoula TOC | City of Pascagoula TOC Roadside Equipment | Planned |
| roadway information system data | City of Pascagoula TOC | City of Pascagoula TOC Roadside Equipment | Existing |
| signal control data | City of Pascagoula TOC | City of Pascagoula TOC Roadside Equipment | Existing |
| emergency plan coordination | City of Pascagoula TOC | City/County 911 Dispatch Centers | Existing |
| emergency traffic control information | City of Pascagoula TOC | City/County 911 Dispatch Centers | Planned |
| incident information | City of Pascagoula TOC | City/County 911 Dispatch Centers | Existing |
| resource deployment status | City of Pascagoula TOC | City/County 911 Dispatch Centers | Planned |
| road network conditions | City of Pascagoula TOC | City/County 911 Dispatch Centers | Planned |
| alert status | City of Pascagoula TOC | County Emergency Operations Centers | Existing |
| emergency plan coordination | City of Pascagoula TOC | County Emergency Operations Centers | Existing |
| emergency traffic control information | City of Pascagoula TOC | County Emergency Operations Centers | Planned |
| resource deployment status | City of Pascagoula TOC | County Emergency Operations Centers | Planned |
| road network conditions | City of Pascagoula TOC | County Emergency Operations Centers | Planned |
| road network status assessment | City of Pascagoula TOC | County Emergency Operations Centers | Planned |
| event confirmation | City of Pascagoula TOC | Event Promoters and Traffic Generators | Existing |
| traffic information coordination | City of Pascagoula TOC | GRPC MPO | Existing |
| traffic control coordination | City of Pascagoula TOC | MDOT District 6 TOC | Planned |
| traffic information coordination | City of Pascagoula TOC | MDOT District 6 TOC | Planned |

| Architecture Flow Name | Source | Destination | Status |
|---|---|---|---|
| road network conditions | City of Pascagoula TOC | Media | Planned |
| roadway information system status | City of Pascagoula TOC Roadside Equipment | City of Pascagoula Public Works | Existing |
| barrier system status | City of Pascagoula TOC Roadside Equipment | City of Pascagoula TOC | Planned |
| request for right-of-way | City of Pascagoula TOC Roadside Equipment | City of Pascagoula TOC | Existing |
| reversible lane status | City of Pascagoula TOC Roadside Equipment | City of Pascagoula TOC | Planned |
| roadway information system status | City of Pascagoula TOC Roadside Equipment | City of Pascagoula TOC | Existing |
| signal control status | City of Pascagoula TOC Roadside Equipment | City of Pascagoula TOC | Existing |
| emergency plan coordination | City/County 911 Dispatch Centers | Biloxi and Gulfport Multimodal Transit Centers | Planned |
| emergency transit service request | City/County 911 Dispatch Centers | Biloxi and Gulfport Multimodal Transit Centers | Planned |
| incident information | City/County 911 Dispatch Centers | Biloxi and Gulfport Multimodal Transit Centers | Planned |
| incident response status | City/County 911 Dispatch Centers | Biloxi and Gulfport Multimodal Transit Centers | Planned |
| decision support information | City/County 911 Dispatch Centers | City of Biloxi Emergency Vehicles | Existing |
| emergency dispatch requests | City/County 911 Dispatch Centers | City of Biloxi Emergency Vehicles | Existing |
| suggested route | City/County 911 Dispatch Centers | City of Biloxi Emergency Vehicles | Planned |
| work plan feedback | City/County 911 Dispatch Centers | City of Biloxi Public Works | Planned |
| emergency plan coordination | City/County 911 Dispatch Centers | City of Biloxi TOC | Existing |
| emergency traffic control request | City/County 911 Dispatch Centers | City of Biloxi TOC | Planned |
| incident information | City/County 911 Dispatch Centers | City of Biloxi TOC | Existing |
| incident response status | City/County 911 Dispatch Centers | City of Biloxi TOC | Existing |
| resource request | City/County 911 Dispatch Centers | City of Biloxi TOC | Planned |
| emergency archive data | City/County 911 Dispatch Centers | City of Gulfport Database | Planned |
| decision support information | City/County 911 Dispatch Centers | City of Gulfport Emergency Vehicles | Existing |
| emergency dispatch requests | City/County 911 Dispatch Centers | City of Gulfport Emergency Vehicles | Existing |
| suggested route | City/County 911 Dispatch Centers | City of Gulfport Emergency Vehicles | Planned |
| work plan feedback | City/County 911 Dispatch Centers | City of Gulfport Public Works | Planned |
| emergency plan coordination | City/County 911 Dispatch Centers | City of Gulfport TOC | Existing |
| emergency traffic control request | City/County 911 Dispatch Centers | City of Gulfport TOC | Planned |
| incident information | City of Gulfport TOC | City/County 911 Dispatch Centers | Existing |
| incident response status | City/County 911 Dispatch Centers | City of Gulfport TOC | Existing |
| resource request | City/County 911 Dispatch Centers | City of Gulfport TOC | Planned |
| emergency archive data | City/County 911 Dispatch Centers | City of Pascagoula Database | Planned |

| Architecture Flow Name | Source | Destination | Status |
|---|---|---|---|
| decision support information | City/County 911 Dispatch Centers | City of Pascagoula Emergency Vehicles | Existing |
| emergency dispatch requests | City/County 911 Dispatch Centers | City of Pascagoula Emergency Vehicles | Existing |
| suggested route | City/County 911 Dispatch Centers | City of Pascagoula Emergency Vehicles | Planned |
| work plan feedback | City/County 911 Dispatch Centers | City of Pascagoula Public Works | Planned |
| emergency plan coordination | City/County 911 Dispatch Centers | City of Pascagoula TOC | Existing |
| emergency traffic control request | City/County 911 Dispatch Centers | City of Pascagoula TOC | Planned |
| incident information | City/County 911 Dispatch Centers | City of Pascagoula TOC | Existing |
| incident response status | City/County 911 Dispatch Centers | City of Pascagoula TOC | Existing |
| resource request | City/County 911 Dispatch Centers | City of Pascagoula TOC | Planned |
| decision support information | City/County 911 Dispatch Centers | City/County Emergency Vehicles | Existing |
| emergency dispatch requests | City/County 911 Dispatch Centers | City/County Emergency Vehicles | Existing |
| suggested route | City/County 911 Dispatch Centers | City/County Emergency Vehicles | Planned |
| emergency plan coordination | City/County 911 Dispatch Centers | Coast Transit Authority | Existing |
| emergency transit service request | City/County 911 Dispatch Centers | Coast Transit Authority | Existing |
| incident information | City/County 911 Dispatch Centers | Coast Transit Authority | Existing |
| incident response status | City/County 911 Dispatch Centers | Coast Transit Authority | Existing |
| alert notification coordination | City/County 911 Dispatch Centers | County Emergency Operations Centers | Existing |
| emergency plan coordination | City/County 911 Dispatch Centers | County Emergency Operations Centers | Existing |
| evacuation coordination | City/County 911 Dispatch Centers | County Emergency Operations Centers | Existing |
| incident command information coordination | City/County 911 Dispatch Centers | County Emergency Operations Centers | Existing |
| incident report | City/County 911 Dispatch Centers | County Emergency Operations Centers | Existing |
| incident response coordination | City/County 911 Dispatch Centers | County Emergency Operations Centers | Existing |
| resource coordination | City/County 911 Dispatch Centers | County Emergency Operations Centers | Existing |
| emergency archive data | City/County 911 Dispatch Centers | Emergency Response Performance Information | Existing |
| incident notification response | City/County 911 Dispatch Centers | Emergency Telecommunications System | Existing |
| event confirmation | City/County 911 Dispatch Centers | Event Promoters and Traffic Generators | Existing |
| alert notification coordination | City/County 911 Dispatch Centers | Gulfport-Biloxi International Airport Operations Center | Existing |
| emergency plan coordination | City/County 911 Dispatch Centers | Gulfport-Biloxi International Airport Operations Center | Existing |
| emergency traffic control request | City/County 911 Dispatch Centers | Gulfport-Biloxi International Airport Operations Center | Planned |

| Architecture Flow Name | Source | Destination | Status |
|---|---|---|---|
| evacuation coordination | City/County 911 Dispatch Centers | Gulfport-Biloxi International Airport Operations Center | Existing |
| incident command information coordination | City/County 911 Dispatch Centers | Gulfport-Biloxi International Airport Operations Center | Existing |
| incident report | City/County 911 Dispatch Centers | Gulfport-Biloxi International Airport Operations Center | Existing |
| incident response coordination | City/County 911 Dispatch Centers | Gulfport-Biloxi International Airport Operations Center | Existing |
| resource coordination | City/County 911 Dispatch Centers | Gulfport-Biloxi International Airport Operations Center | Existing |
| threat information coordination | City/County 911 Dispatch Centers | Gulfport-Biloxi International Airport Operations Center | Planned |
| emergency archive data | City/County 911 Dispatch Centers | Local City/County Databases | Planned |
| work plan feedback | City/County 911 Dispatch Centers | Local City/County Public Works | Planned |
| emergency plan coordination | City/County 911 Dispatch Centers | Local City/County TOCs | Existing |
| emergency traffic control request | City/County 911 Dispatch Centers | Local City/County TOCs | Planned |
| incident information | City/County 911 Dispatch Centers | Local City/County TOCs | Existing |
| incident response status | City/County 911 Dispatch Centers | Local City/County TOCs | Existing |
| resource request | City/County 911 Dispatch Centers | Local City/County TOCs | Planned |
| emergency plan coordination | City/County 911 Dispatch Centers | MDOT District 6 Maintenance and Construction Offices | Existing |
| work plan feedback | City/County 911 Dispatch Centers | MDOT District 6 Maintenance and Construction Offices | Planned |
| emergency plan coordination | City/County 911 Dispatch Centers | MDOT District 6 TOC | Existing |
| emergency traffic control request | City/County 911 Dispatch Centers | MDOT District 6 TOC | Planned |
| incident information | City/County 911 Dispatch Centers | MDOT District 6 TOC | Existing |
| incident response status | City/County 911 Dispatch Centers | MDOT District 6 TOC | Existing |
| resource request | City/County 911 Dispatch Centers | MDOT District 6 TOC | Planned |
| incident information for media | City/County 911 Dispatch Centers | Media | Existing |
| alert notification coordination | City/County 911 Dispatch Centers | MEMA Emergency Operations Center | Existing |
| emergency plan coordination | City/County 911 Dispatch Centers | MEMA Emergency Operations Center | Existing |
| evacuation coordination | City/County 911 Dispatch Centers | MEMA Emergency Operations Center | Existing |
| incident command information coordination | City/County 911 Dispatch Centers | MEMA Emergency Operations Center | Existing |
| incident report | City/County 911 Dispatch Centers | MEMA Emergency Operations Center | Existing |
| incident response coordination | City/County 911 Dispatch Centers | MEMA Emergency Operations Center | Existing |
| resource coordination | City/County 911 Dispatch Centers | MEMA Emergency Operations Center | Existing |
| emergency plan coordination | City/County 911 Dispatch Centers | MHP Dispatch Centers | Existing |

| Architecture Flow Name | Source | Destination | Status |
|---|---|---|---|
| evacuation coordination | City/County 911 Dispatch Centers | MHP Dispatch Centers | Existing |
| incident command information coordination | City/County 911 Dispatch Centers | MHP Dispatch Centers | Existing |
| incident report | City/County 911 Dispatch Centers | MHP Dispatch Centers | Existing |
| incident response coordination | City/County 911 Dispatch Centers | MHP Dispatch Centers | Existing |
| resource coordination | City/County 911 Dispatch Centers | MHP Dispatch Centers | Existing |
| alert notification coordination | City/County 911 Dispatch Centers | Mississippi Bureau of Investigations | Existing |
| emergency plan coordination | City/County 911 Dispatch Centers | Mississippi Department of Environmental Quality | Existing |
| incident report | City/County 911 Dispatch Centers | Mississippi Department of Environmental Quality | Existing |
| incident response coordination | City/County 911 Dispatch Centers | Mississippi Department of Environmental Quality | Existing |
| alert notification coordination | City/County 911 Dispatch Centers | Mississippi Emergency Management Agency | Existing |
| emergency plan coordination | City/County 911 Dispatch Centers | Mississippi Emergency Management Agency | Existing |
| evacuation coordination | City/County 911 Dispatch Centers | Mississippi Emergency Management Agency | Existing |
| alert notification coordination | City/County 911 Dispatch Centers | Mississippi Office of Homeland Security | Existing |
| emergency plan coordination | City/County 911 Dispatch Centers | Mississippi Office of Homeland Security | Existing |
| evacuation coordination | City/County 911 Dispatch Centers | Mississippi Office of Homeland Security | Existing |
| local signal preemption request | City/County Emergency Vehicles | City of Biloxi TOC Roadside Equipment | Planned |
| local signal preemption request | City/County Emergency Vehicles | City of Gulfport TOC Roadside Equipment | Existing |
| local signal preemption request | City/County Emergency Vehicles | City of Pascagoula TOC Roadside Equipment | Planned |
| emergency dispatch response | City/County Emergency Vehicles | City/County 911 Dispatch Centers | Existing |
| emergency vehicle tracking data | City/County Emergency Vehicles | City/County 911 Dispatch Centers | Planned |
| incident status | City/County Emergency Vehicles | City/County 911 Dispatch Centers | Existing |
| local signal preemption request | City/County Emergency Vehicles | Local City/County TOCs Roadside Equipment | Existing |
| local signal preemption request | City/County Emergency Vehicles | MDOT District 6 Traffic Signal Systems | Planned |
| transit multimodal information | Coast Transit Authority | AMTRAK | Planned |
| threat information coordination | Coast Transit Authority | Biloxi and Gulfport Multimodal Transit Centers | Planned |
| transit fare coordination | Coast Transit Authority | Biloxi and Gulfport Multimodal Transit Centers | Planned |
| transit service coordination | Coast Transit Authority | Biloxi and Gulfport Multimodal Transit Centers | Planned |

| Architecture Flow Name | Source | Destination | Status |
|---|---|---|---|
| transit traveler information coordination | Coast Transit Authority | Biloxi and Gulfport Multimodal Transit Centers | Planned |
| work plan feedback | Coast Transit Authority | City of Biloxi Public Works | Planned |
| traffic control priority request | Coast Transit Authority | City of Biloxi TOC | Planned |
| transit system data | Coast Transit Authority | City of Biloxi TOC | Planned |
| work plan feedback | Coast Transit Authority | City of Gulfport Public Works | Planned |
| traffic control priority request | Coast Transit Authority | City of Gulfport TOC | Planned |
| transit system data | Coast Transit Authority | City of Gulfport TOC | Planned |
| emergency plan coordination | Coast Transit Authority | City/County 911 Dispatch Centers | Existing |
| emergency transit schedule information | Coast Transit Authority | City/County 911 Dispatch Centers | Existing |
| emergency transit service response | Coast Transit Authority | City/County 911 Dispatch Centers | Existing |
| transit emergency data | Coast Transit Authority | City/County 911 Dispatch Centers | Existing |
| transit archive data | Coast Transit Authority | Coast Transit Authority Database | Existing |
| secure area surveillance control | Coast Transit Authority | Coast Transit Authority Security Monitoring Systems | Existing |
| alarm acknowledge | Coast Transit Authority | Coast Transit Authority Transit Vehicles | Planned |
| fare management information | Coast Transit Authority | Coast Transit Authority Transit Vehicles | Planned |
| request for vehicle measures | Coast Transit Authority | Coast Transit Authority Transit Vehicles | Planned |
| secure area surveillance control | Coast Transit Authority | Coast Transit Authority Transit Vehicles | Planned |
| transit schedule information | Coast Transit Authority | Coast Transit Authority Transit Vehicles | Existing |
| transit vehicle operator authentication update | Coast Transit Authority | Coast Transit Authority Transit Vehicles | Planned |
| transit vehicle operator information | Coast Transit Authority | Coast Transit Authority Transit Vehicles | Existing |
| transit and fare schedules | Coast Transit Authority | Coast Transit Authority Website | Existing |
| alert status | Coast Transit Authority | County Emergency Operations Centers | Existing |
| emergency plan coordination | Coast Transit Authority | County Emergency Operations Centers | Existing |
| emergency transit schedule information | Coast Transit Authority | County Emergency Operations Centers | Existing |
| emergency transit service response | Coast Transit Authority | County Emergency Operations Centers | Existing |
| transit emergency data | Coast Transit Authority | County Emergency Operations Centers | Planned |
| transit system status assessment | Coast Transit Authority | County Emergency Operations Centers | Planned |
| transit demand management response | Coast Transit Authority | GRPC MPO | Existing |
| transit system data | Coast Transit Authority | GRPC MPO | Existing |

| Architecture Flow Name | Source | Destination | Status |
|---|---|---|---|
| transit and fare schedules | Coast Transit Authority | Gulfport-Biloxi International Airport Information System | Existing |
| emergency plan coordination | Coast Transit Authority | Gulfport-Biloxi International Airport Operations Center | Existing |
| emergency transit schedule information | Coast Transit Authority | Gulfport-Biloxi International Airport Operations Center | Existing |
| emergency transit service response | Coast Transit Authority | Gulfport-Biloxi International Airport Operations Center | Existing |
| threat information coordination | Coast Transit Authority | Gulfport-Biloxi International Airport Operations Center | Planned |
| work plan feedback | Coast Transit Authority | Local City/County Public Works | Planned |
| traffic control priority request | Coast Transit Authority | Local City/County TOCs | Planned |
| transit system data | Coast Transit Authority | Local City/County TOCs | Planned |
| traffic control priority request | Coast Transit Authority | MDOT District 6 TOC | Planned |
| transit system data | Coast Transit Authority | MDOT District 6 TOC | Planned |
| transit and fare schedules | Coast Transit Authority | MDOT Statewide 511 System | Planned |
| transit and fare schedules | Coast Transit Authority | MDOT Traveler Information Repository | Planned |
| alert status | Coast Transit Authority | MEMA Emergency Operations Center | Existing |
| emergency plan coordination | Coast Transit Authority | MEMA Emergency Operations Center | Existing |
| emergency transit schedule information | Coast Transit Authority | MEMA Emergency Operations Center | Existing |
| emergency transit service response | Coast Transit Authority | MEMA Emergency Operations Center | Existing |
| transit emergency data | Coast Transit Authority | MEMA Emergency Operations Center | Planned |
| transit system status assessment | Coast Transit Authority | MEMA Emergency Operations Center | Planned |
| emergency plan coordination | Coast Transit Authority | MHP Dispatch Centers | Planned |
| emergency transit schedule information | Coast Transit Authority | MHP Dispatch Centers | Planned |
| emergency transit service response | Coast Transit Authority | MHP Dispatch Centers | Planned |
| transit emergency data | Coast Transit Authority | MHP Dispatch Centers | Planned |
| alert status | Coast Transit Authority | Mississippi Emergency Management Agency | Existing |
| emergency plan coordination | Coast Transit Authority | Mississippi Emergency Management Agency | Existing |
| transit emergency data | Coast Transit Authority | Mississippi Emergency Management Agency | Planned |
| alert status | Coast Transit Authority | Mississippi Office of Homeland Security | Planned |
| emergency plan coordination | Coast Transit Authority | Mississippi Office of Homeland Security | Existing |
| transit emergency data | Coast Transit Authority | Mississippi Office of Homeland Security | Planned |

| Architecture Flow Name | Source | Destination | Status |
|---|---|---|---|
| transit fare coordination | Coast Transit Authority | Other Transit Service Providers | Planned |
| transit service coordination | Coast Transit Authority | Other Transit Service Providers | Planned |
| transit traveler information coordination | Coast Transit Authority | Other Transit Service Providers | Planned |
| archive requests | Coast Transit Authority Database | Coast Transit Authority | Existing |
| archive status | Coast Transit Authority Database | Coast Transit Authority | Existing |
| archive coordination | Coast Transit Authority Database | GRPC MPO Databases | Planned |
| secure area surveillance data | Coast Transit Authority Security Monitoring Systems | Coast Transit Authority | Existing |
| payment | Coast Transit Authority Transit Card | Biloxi and Gulfport Multimodal Transit Centers Kiosks | Planned |
| payment | Coast Transit Authority Transit Card | Coast Transit Authority Transit Vehicles | Planned |
| alarm notification | Coast Transit Authority Transit Vehicles | Biloxi and Gulfport Multimodal Transit Centers | Planned |
| fare and payment status | Coast Transit Authority Transit Vehicles | Biloxi and Gulfport Multimodal Transit Centers | Planned |
| secure area surveillance data | Coast Transit Authority Transit Vehicles | Biloxi and Gulfport Multimodal Transit Centers | Planned |
| transit vehicle location data | Coast Transit Authority Transit Vehicles | Biloxi and Gulfport Multimodal Transit Centers | Planned |
| transit vehicle operator authentication information | Coast Transit Authority Transit Vehicles | Biloxi and Gulfport Multimodal Transit Centers | Planned |
| transit vehicle passenger and use data | Coast Transit Authority Transit Vehicles | Biloxi and Gulfport Multimodal Transit Centers | Planned |
| transit vehicle schedule performance | Coast Transit Authority Transit Vehicles | Biloxi and Gulfport Multimodal Transit Centers | Planned |
| local signal priority request | Coast Transit Authority Transit Vehicles | City of Biloxi TOC Roadside Equipment | Planned |
| local signal priority request | Coast Transit Authority Transit Vehicles | City of Gulfport TOC Roadside Equipment | Planned |
| alarm notification | Coast Transit Authority Transit Vehicles | Coast Transit Authority | Planned |
| fare and payment status | Coast Transit Authority Transit Vehicles | Coast Transit Authority | Planned |
| secure area surveillance data | Coast Transit Authority Transit Vehicles | Coast Transit Authority | Planned |
| transit vehicle conditions | Coast Transit Authority Transit Vehicles | Coast Transit Authority | Planned |
| transit vehicle location data | Coast Transit Authority Transit Vehicles | Coast Transit Authority | Planned |
| transit vehicle operator authentication information | Coast Transit Authority Transit Vehicles | Coast Transit Authority | Planned |
| transit vehicle passenger and use data | Coast Transit Authority Transit Vehicles | Coast Transit Authority | Planned |
| transit vehicle schedule performance | Coast Transit Authority Transit Vehicles | Coast Transit Authority | Planned |

| Architecture Flow Name | Source | Destination | Status |
|---|---|---|---|
| request for payment | Coast Transit Authority Transit Vehicles | Coast Transit Authority Transit Card | Planned |
| local signal priority request | Coast Transit Authority Transit Vehicles | Local City/County TOCs Roadside Equipment | Planned |
| local signal priority request | Coast Transit Authority Transit Vehicles | MDOT District 6 Traffic Signal Systems | Planned |
| transit information request | Coast Transit Authority Website | Coast Transit Authority | Existing |
| broadcast information | Coast Transit Authority Website | User Personal Computing Devices | Existing |
| alert notification | County Emergency Operations Centers | Biloxi and Gulfport Multimodal Transit Centers | Planned |
| emergency plan coordination | County Emergency Operations Centers | Biloxi and Gulfport Multimodal Transit Centers | Planned |
| emergency transit service request | County Emergency Operations Centers | Biloxi and Gulfport Multimodal Transit Centers | Planned |
| evacuation information | County Emergency Operations Centers | Biloxi and Gulfport Multimodal Transit Centers | Planned |
| incident information | County Emergency Operations Centers | Biloxi and Gulfport Multimodal Transit Centers | Planned |
| threat information coordination | County Emergency Operations Centers | Biloxi and Gulfport Multimodal Transit Centers | Planned |
| transportation system status | County Emergency Operations Centers | Biloxi and Gulfport Multimodal Transit Centers | Planned |
| alert notification | County Emergency Operations Centers | City of Biloxi Public Works | Existing |
| emergency plan coordination | County Emergency Operations Centers | City of Biloxi Public Works | Existing |
| evacuation information | County Emergency Operations Centers | City of Biloxi Public Works | Existing |
| maintenance and construction resource request | County Emergency Operations Centers | City of Biloxi Public Works | Planned |
| alert notification | County Emergency Operations Centers | City of Biloxi TOC | Existing |
| emergency plan coordination | County Emergency Operations Centers | City of Biloxi TOC | Existing |
| emergency traffic control request | County Emergency Operations Centers | City of Biloxi TOC | Planned |
| evacuation information | County Emergency Operations Centers | City of Biloxi TOC | Existing |
| resource request | County Emergency Operations Centers | City of Biloxi TOC | Planned |
| transportation system status | County Emergency Operations Centers | City of Biloxi TOC | Planned |
| alert notification | County Emergency Operations Centers | City of Gulfport Public Works | Existing |
| emergency plan coordination | County Emergency Operations Centers | City of Gulfport Public Works | Existing |
| evacuation information | County Emergency Operations Centers | City of Gulfport Public Works | Existing |

| Architecture Flow Name | Source | Destination | Status |
|---|---|---|---|
| maintenance and construction resource request | County Emergency Operations Centers | City of Gulfport Public Works | Planned |
| alert notification | County Emergency Operations Centers | City of Gulfport TOC | Existing |
| emergency plan coordination | County Emergency Operations Centers | City of Gulfport TOC | Existing |
| emergency traffic control request | County Emergency Operations Centers | City of Gulfport TOC | Planned |
| evacuation information | County Emergency Operations Centers | City of Gulfport TOC | Existing |
| resource request | County Emergency Operations Centers | City of Gulfport TOC | Planned |
| transportation system status | County Emergency Operations Centers | City of Gulfport TOC | Planned |
| alert notification | County Emergency Operations Centers | City of Pascagoula Public Works | Existing |
| emergency plan coordination | County Emergency Operations Centers | City of Pascagoula Public Works | Existing |
| evacuation information | County Emergency Operations Centers | City of Pascagoula Public Works | Existing |
| maintenance and construction resource request | County Emergency Operations Centers | City of Pascagoula Public Works | Planned |
| alert notification | County Emergency Operations Centers | City of Pascagoula TOC | Existing |
| emergency plan coordination | County Emergency Operations Centers | City of Pascagoula TOC | Existing |
| emergency traffic control request | County Emergency Operations Centers | City of Pascagoula TOC | Planned |
| evacuation information | County Emergency Operations Centers | City of Pascagoula TOC | Existing |
| resource request | County Emergency Operations Centers | City of Pascagoula TOC | Planned |
| transportation system status | County Emergency Operations Centers | City of Pascagoula TOC | Planned |
| alert notification coordination | County Emergency Operations Centers | City/County 911 Dispatch Centers | Existing |
| emergency plan coordination | County Emergency Operations Centers | City/County 911 Dispatch Centers | Existing |
| evacuation coordination | County Emergency Operations Centers | City/County 911 Dispatch Centers | Existing |
| incident command information coordination | County Emergency Operations Centers | City/County 911 Dispatch Centers | Existing |
| incident report | County Emergency Operations Centers | City/County 911 Dispatch Centers | Existing |
| incident response coordination | County Emergency Operations Centers | City/County 911 Dispatch Centers | Existing |
| resource coordination | County Emergency Operations Centers | City/County 911 Dispatch Centers | Existing |

| Architecture Flow Name | Source | Destination | Status |
|---|---|---|---|
| transportation system status | County Emergency Operations Centers | City/County 911 Dispatch Centers | Planned |
| alert notification | County Emergency Operations Centers | Coast Transit Authority | Existing |
| emergency plan coordination | County Emergency Operations Centers | Coast Transit Authority | Existing |
| emergency transit service request | County Emergency Operations Centers | Coast Transit Authority | Existing |
| evacuation information | County Emergency Operations Centers | Coast Transit Authority | Existing |
| transportation system status | County Emergency Operations Centers | Coast Transit Authority | Planned |
| event confirmation | County Emergency Operations Centers | Event Promoters and Traffic Generators | Existing |
| alert notification coordination | County Emergency Operations Centers | Gulfport-Biloxi International Airport Operations Center | Existing |
| emergency plan coordination | County Emergency Operations Centers | Gulfport-Biloxi International Airport Operations Center | Existing |
| emergency traffic control request | County Emergency Operations Centers | Gulfport-Biloxi International Airport Operations Center | Planned |
| evacuation coordination | County Emergency Operations Centers | Gulfport-Biloxi International Airport Operations Center | Existing |
| incident command information coordination | County Emergency Operations Centers | Gulfport-Biloxi International Airport Operations Center | Existing |
| incident report | County Emergency Operations Centers | Gulfport-Biloxi International Airport Operations Center | Existing |
| incident response coordination | County Emergency Operations Centers | Gulfport-Biloxi International Airport Operations Center | Existing |
| resource coordination | County Emergency Operations Centers | Gulfport-Biloxi International Airport Operations Center | Existing |
| threat information coordination | County Emergency Operations Centers | Gulfport-Biloxi International Airport Operations Center | Planned |
| transportation system status | County Emergency Operations Centers | Gulfport-Biloxi International Airport Operations Center | Planned |
| emergency archive data | County Emergency Operations Centers | Local City/County Databases | Planned |
| traveler archive data | County Emergency Operations Centers | Local City/County Databases | Planned |
| alert notification | County Emergency Operations Centers | Local City/County Public Works | Existing |
| emergency plan coordination | County Emergency Operations Centers | Local City/County Public Works | Existing |
| evacuation information | County Emergency Operations Centers | Local City/County Public Works | Existing |
| maintenance and construction resource request | County Emergency Operations Centers | Local City/County Public Works | Planned |
| alert notification | County Emergency Operations Centers | Local City/County TOCs | Existing |
| emergency plan coordination | County Emergency Operations Centers | Local City/County TOCs | Existing |

| Architecture Flow Name | Source | Destination | Status |
|---|---|---|---|
| emergency traffic control request | County Emergency Operations Centers | Local City/County TOCs | Planned |
| evacuation information | County Emergency Operations Centers | Local City/County TOCs | Existing |
| resource request | County Emergency Operations Centers | Local City/County TOCs | Planned |
| transportation system status | County Emergency Operations Centers | Local City/County TOCs | Planned |
| alert notification | County Emergency Operations Centers | MDOT District 6 Maintenance and Construction Offices | Existing |
| emergency plan coordination | County Emergency Operations Centers | MDOT District 6 Maintenance and Construction Offices | Existing |
| evacuation information | County Emergency Operations Centers | MDOT District 6 Maintenance and Construction Offices | Existing |
| maintenance and construction resource request | County Emergency Operations Centers | MDOT District 6 Maintenance and Construction Offices | Planned |
| alert notification | County Emergency Operations Centers | MDOT District 6 TOC | Existing |
| emergency plan coordination | County Emergency Operations Centers | MDOT District 6 TOC | Existing |
| emergency traffic control request | County Emergency Operations Centers | MDOT District 6 TOC | Planned |
| evacuation information | County Emergency Operations Centers | MDOT District 6 TOC | Existing |
| resource request | County Emergency Operations Centers | MDOT District 6 TOC | Planned |
| transportation system status | County Emergency Operations Centers | MDOT District 6 TOC | Planned |
| alert notification | County Emergency Operations Centers | MDOT Statewide 511 System | Planned |
| alert notification | County Emergency Operations Centers | MDOT Traveler Information Repository | Planned |
| evacuation information | County Emergency Operations Centers | MDOT Traveler Information Repository | Planned |
| incident information for media | County Emergency Operations Centers | Media | Existing |
| alert notification coordination | County Emergency Operations Centers | MEMA Emergency Operations Center | Existing |
| emergency plan coordination | County Emergency Operations Centers | MEMA Emergency Operations Center | Existing |
| evacuation coordination | County Emergency Operations Centers | MEMA Emergency Operations Center | Existing |
| incident command information coordination | County Emergency Operations Centers | MEMA Emergency Operations Center | Existing |
| incident report | County Emergency Operations Centers | MEMA Emergency Operations Center | Existing |
| incident response coordination | County Emergency Operations Centers | MEMA Emergency Operations Center | Existing |
| resource coordination | County Emergency Operations Centers | MEMA Emergency Operations Center | Existing |

| Architecture Flow Name | Source | Destination | Status |
|---|---|---|---|
| transportation system status | County Emergency Operations Centers | MEMA Emergency Operations Center | Planned |
| alert notification coordination | County Emergency Operations Centers | MHP Dispatch Centers | Existing |
| emergency plan coordination | County Emergency Operations Centers | MHP Dispatch Centers | Existing |
| evacuation coordination | County Emergency Operations Centers | MHP Dispatch Centers | Existing |
| incident command information coordination | County Emergency Operations Centers | MHP Dispatch Centers | Existing |
| incident report | County Emergency Operations Centers | MHP Dispatch Centers | Existing |
| incident response coordination | County Emergency Operations Centers | MHP Dispatch Centers | Existing |
| resource coordination | County Emergency Operations Centers | MHP Dispatch Centers | Existing |
| alert notification coordination | County Emergency Operations Centers | Mississippi Bureau of Investigations | Existing |
| alert notification coordination | County Emergency Operations Centers | Mississippi Department of Environmental Quality | Existing |
| emergency plan coordination | County Emergency Operations Centers | Mississippi Department of Environmental Quality | Existing |
| incident report | County Emergency Operations Centers | Mississippi Department of Environmental Quality | Existing |
| incident response coordination | County Emergency Operations Centers | Mississippi Department of Environmental Quality | Existing |
| alert notification coordination | County Emergency Operations Centers | Mississippi Emergency Management Agency | Existing |
| emergency plan coordination | County Emergency Operations Centers | Mississippi Emergency Management Agency | Existing |
| evacuation coordination | County Emergency Operations Centers | Mississippi Emergency Management Agency | Existing |
| alert notification coordination | County Emergency Operations Centers | Mississippi Office of Homeland Security | Existing |
| emergency plan coordination | County Emergency Operations Centers | Mississippi Office of Homeland Security | Existing |
| evacuation coordination | County Emergency Operations Centers | Mississippi Office of Homeland Security | Existing |
| emergency traveler information | County Emergency Operations Centers | User Personal Computing Devices | Existing |
| archive requests | Emergency Response Performance Information | City/County 911 Dispatch Centers | Existing |
| archive status | Emergency Response Performance Information | City/County 911 Dispatch Centers | Existing |
| archive requests | Emergency Response Performance Information | MHP Dispatch Centers | Existing |
| archive status | Emergency Response Performance Information | MHP Dispatch Centers | Existing |
| incident notification | Emergency Telecommunications System | City/County 911 Dispatch Centers | Existing |

| Architecture Flow Name | Source | Destination | Status |
|---|---|---|---|
| incident notification | Emergency Telecommunications System | Gulfport-Biloxi International Airport Operations Center | Planned |
| incident notification | Emergency Telecommunications System | MHP Dispatch Centers | Existing |
| event plans | Event Promoters and Traffic Generators | City of Biloxi TOC | Existing |
| event plans | Event Promoters and Traffic Generators | City of Gulfport TOC | Existing |
| event plans | Event Promoters and Traffic Generators | City of Pascagoula TOC | Existing |
| event plans | Event Promoters and Traffic Generators | City/County 911 Dispatch Centers | Existing |
| event plans | Event Promoters and Traffic Generators | County Emergency Operations Centers | Existing |
| event plans | Event Promoters and Traffic Generators | GRPC MPO | Existing |
| event plans | Event Promoters and Traffic Generators | Gulfport-Biloxi International Airport Operations Center | Existing |
| event plans | Event Promoters and Traffic Generators | Local City/County TOCs | Existing |
| event plans | Event Promoters and Traffic Generators | MDOT District 6 TOC | Existing |
| event plans | Event Promoters and Traffic Generators | MHP Dispatch Centers | Existing |
| event plans | Event Promoters and Traffic Generators | MHP District 8 Offices | Existing |
| transit fare coordination | Greyhound | Biloxi and Gulfport Multimodal Transit Centers | Planned |
| transit service coordination | Greyhound | Biloxi and Gulfport Multimodal Transit Centers | Planned |
| transit traveler information coordination | Greyhound | Biloxi and Gulfport Multimodal Transit Centers | Planned |
| request transit information | GRPC MPO | Biloxi and Gulfport Multimodal Transit Centers | Planned |
| transit demand management request | GRPC MPO | Biloxi and Gulfport Multimodal Transit Centers | Planned |
| traffic information coordination | GRPC MPO | City of Biloxi TOC | Existing |
| traffic information coordination | GRPC MPO | City of Gulfport TOC | Existing |
| traffic information coordination | GRPC MPO | City of Pascagoula TOC | Existing |
| request transit information | GRPC MPO | Coast Transit Authority | Existing |
| transit demand management request | GRPC MPO | Coast Transit Authority | Existing |
| event confirmation | GRPC MPO | Event Promoters and Traffic Generators | Existing |
| traffic archive data | GRPC MPO | GRPC MPO Databases | Planned |
| traffic information coordination | GRPC MPO | Gulfport-Biloxi International Airport Operations Center | Existing |

| Architecture Flow Name | Source | Destination | Status |
|---|---|---|---|
| traffic information coordination | GRPC MPO | Local City/County TOCs | Existing |
| traffic information coordination | GRPC MPO | MDOT District 6 TOC | Existing |
| archive coordination | GRPC MPO Databases | City of Biloxi Database | Planned |
| archive coordination | GRPC MPO Databases | City of Gulfport Database | Planned |
| archive coordination | GRPC MPO Databases | City of Pascagoula Database | Planned |
| archive coordination | GRPC MPO Databases | Coast Transit Authority Database | Planned |
| archive requests | GRPC MPO Databases | GRPC MPO | Planned |
| archive status | GRPC MPO Databases | GRPC MPO | Planned |
| archive coordination | GRPC MPO Databases | Local City/County Databases | Planned |
| barrier system status | Gulfport-Biloxi International Airport Field Equipment | Gulfport-Biloxi International Airport Operations Center | Planned |
| roadway information system status | Gulfport-Biloxi International Airport Field Equipment | Gulfport-Biloxi International Airport Operations Center | Planned |
| traffic images | Gulfport-Biloxi International Airport Field Equipment | Gulfport-Biloxi International Airport Operations Center | Planned |
| ISP coordination | Gulfport-Biloxi International Airport Information System | Biloxi and Gulfport Multimodal Transit Centers | Planned |
| transit information request | Gulfport-Biloxi International Airport Information System | Biloxi and Gulfport Multimodal Transit Centers | Planned |
| transit information request | Gulfport-Biloxi International Airport Information System | Coast Transit Authority | Existing |
| ISP coordination | Gulfport-Biloxi International Airport Information System | MDOT Traveler Information Repository | Planned |
| traveler information for media | Gulfport-Biloxi International Airport Information System | Media | Planned |
| broadcast information | Gulfport-Biloxi International Airport Information System | User Personal Computing Devices | Existing |
| emergency traveler information | Gulfport-Biloxi International Airport Information System | User Personal Computing Devices | Existing |
| emergency plan coordination | Gulfport-Biloxi International Airport Operations Center | Biloxi and Gulfport Multimodal Transit Centers | Planned |
| emergency transit service request | Gulfport-Biloxi International Airport Operations Center | Biloxi and Gulfport Multimodal Transit Centers | Planned |
| incident information | Gulfport-Biloxi International Airport Operations Center | Biloxi and Gulfport Multimodal Transit Centers | Planned |
| incident response status | Gulfport-Biloxi International Airport Operations Center | Biloxi and Gulfport Multimodal Transit Centers | Planned |
| threat information coordination | Gulfport-Biloxi International Airport Operations Center | Biloxi and Gulfport Multimodal Transit Centers | Planned |
| work plan feedback | Gulfport-Biloxi International Airport Operations Center | City of Gulfport Public Works | Planned |
| emergency plan coordination | Gulfport-Biloxi International Airport Operations Center | City of Gulfport TOC | Existing |
| emergency traffic control request | Gulfport-Biloxi International Airport Operations Center | City of Gulfport TOC | Planned |
| incident information | Gulfport-Biloxi International Airport Operations Center | City of Gulfport TOC | Existing |
| resource request | Gulfport-Biloxi International Airport Operations Center | City of Gulfport TOC | Planned |

| Architecture Flow Name | Source | Destination | Status |
|---|---|---|---|
| alert notification coordination | Gulfport-Biloxi International Airport Operations Center | City/County 911 Dispatch Centers | Existing |
| emergency plan coordination | Gulfport-Biloxi International Airport Operations Center | City/County 911 Dispatch Centers | Existing |
| emergency traffic control information | Gulfport-Biloxi International Airport Operations Center | City/County 911 Dispatch Centers | Planned |
| evacuation coordination | Gulfport-Biloxi International Airport Operations Center | City/County 911 Dispatch Centers | Existing |
| incident command information coordination | Gulfport-Biloxi International Airport Operations Center | City/County 911 Dispatch Centers | Existing |
| incident report | Gulfport-Biloxi International Airport Operations Center | City/County 911 Dispatch Centers | Existing |
| incident response coordination | Gulfport-Biloxi International Airport Operations Center | City/County 911 Dispatch Centers | Existing |
| resource coordination | Gulfport-Biloxi International Airport Operations Center | City/County 911 Dispatch Centers | Existing |
| threat information coordination | Gulfport-Biloxi International Airport Operations Center | City/County 911 Dispatch Centers | Planned |
| emergency plan coordination | Gulfport-Biloxi International Airport Operations Center | Coast Transit Authority | Existing |
| emergency transit service request | Gulfport-Biloxi International Airport Operations Center | Coast Transit Authority | Existing |
| incident information | Gulfport-Biloxi International Airport Operations Center | Coast Transit Authority | Planned |
| incident response status | Gulfport-Biloxi International Airport Operations Center | Coast Transit Authority | Planned |
| threat information coordination | Gulfport-Biloxi International Airport Operations Center | Coast Transit Authority | Planned |
| emergency plan coordination | Gulfport-Biloxi International Airport Operations Center | County Emergency Operations Centers | Existing |
| emergency traffic control information | Gulfport-Biloxi International Airport Operations Center | County Emergency Operations Centers | Planned |
| evacuation coordination | Gulfport-Biloxi International Airport Operations Center | County Emergency Operations Centers | Existing |
| incident command information coordination | Gulfport-Biloxi International Airport Operations Center | County Emergency Operations Centers | Existing |
| incident report | Gulfport-Biloxi International Airport Operations Center | County Emergency Operations Centers | Existing |
| incident response coordination | Gulfport-Biloxi International Airport Operations Center | County Emergency Operations Centers | Existing |
| resource coordination | Gulfport-Biloxi International Airport Operations Center | County Emergency Operations Centers | Existing |
| threat information coordination | Gulfport-Biloxi International Airport Operations Center | County Emergency Operations Centers | Planned |
| transportation system status | Gulfport-Biloxi International Airport Operations Center | County Emergency Operations Centers | Planned |
| incident notification response | Gulfport-Biloxi International Airport Operations Center | Emergency Telecommunications System | Planned |
| event confirmation | Gulfport-Biloxi International Airport Operations Center | Event Promoters and Traffic Generators | Existing |

| Architecture Flow Name | Source | Destination | Status |
|---|---|---|---|
| traffic information coordination | Gulfport-Biloxi International Airport Operations Center | GRPC MPO | Existing |
| barrier system control | Gulfport-Biloxi International Airport Operations Center | Gulfport-Biloxi International Airport Field Equipment | Planned |
| roadway information system data | Gulfport-Biloxi International Airport Operations Center | Gulfport-Biloxi International Airport Field Equipment | Planned |
| video surveillance control | Gulfport-Biloxi International Airport Operations Center | Gulfport-Biloxi International Airport Field Equipment | Planned |
| multimodal information | Gulfport-Biloxi International Airport Operations Center | Gulfport-Biloxi International Airport Information System | Existing |
| secure area surveillance control | Gulfport-Biloxi International Airport Operations Center | Gulfport-Biloxi International Airport Security Monitoring System | Existing |
| emergency plan coordination | Gulfport-Biloxi International Airport Operations Center | MDOT District 6 TOC | Existing |
| emergency traffic control request | Gulfport-Biloxi International Airport Operations Center | MDOT District 6 TOC | Planned |
| incident information | Gulfport-Biloxi International Airport Operations Center | MDOT District 6 TOC | Existing |
| resource request | Gulfport-Biloxi International Airport Operations Center | MDOT District 6 TOC | Planned |
| incident information for media | Gulfport-Biloxi International Airport Operations Center | Media | Existing |
| alert notification coordination | Gulfport-Biloxi International Airport Operations Center | MEMA Emergency Operations Center | Existing |
| emergency plan coordination | Gulfport-Biloxi International Airport Operations Center | MEMA Emergency Operations Center | Existing |
| emergency traffic control information | Gulfport-Biloxi International Airport Operations Center | MEMA Emergency Operations Center | Planned |
| evacuation coordination | Gulfport-Biloxi International Airport Operations Center | MEMA Emergency Operations Center | Existing |
| incident command information coordination | Gulfport-Biloxi International Airport Operations Center | MEMA Emergency Operations Center | Existing |
| incident report | Gulfport-Biloxi International Airport Operations Center | MEMA Emergency Operations Center | Existing |
| incident response coordination | Gulfport-Biloxi International Airport Operations Center | MEMA Emergency Operations Center | Existing |
| resource coordination | Gulfport-Biloxi International Airport Operations Center | MEMA Emergency Operations Center | Existing |
| threat information coordination | Gulfport-Biloxi International Airport Operations Center | MEMA Emergency Operations Center | Planned |
| transportation system status | Gulfport-Biloxi International Airport Operations Center | MEMA Emergency Operations Center | Planned |
| alert notification coordination | Gulfport-Biloxi International Airport Operations Center | Mississippi Bureau of Investigations | Existing |
| alert notification coordination | Gulfport-Biloxi International Airport Operations Center | Mississippi Emergency Management Agency | Existing |
| emergency plan coordination | Gulfport-Biloxi International Airport Operations Center | Mississippi Emergency Management Agency | Existing |
| evacuation coordination | Gulfport-Biloxi International Airport Operations Center | Mississippi Emergency Management Agency | Existing |

| Architecture Flow Name | Source | Destination | Status |
|---|---|---|---|
| threat information coordination | Gulfport-Biloxi International Airport Operations Center | Mississippi Emergency Management Agency | Planned |
| alert notification coordination | Gulfport-Biloxi International Airport Operations Center | Mississippi Office of Homeland Security | Existing |
| emergency plan coordination | Gulfport-Biloxi International Airport Operations Center | Mississippi Office of Homeland Security | Existing |
| evacuation coordination | Gulfport-Biloxi International Airport Operations Center | Mississippi Office of Homeland Security | Existing |
| threat information coordination | Gulfport-Biloxi International Airport Operations Center | Mississippi Office of Homeland Security | Planned |
| payment | Gulfport-Biloxi International Airport Parking Card | Gulfport-Biloxi International Airport Parking Management | Planned |
| driver parking information | Gulfport-Biloxi International Airport Parking Management | Driver | Planned |
| roadside transaction status | Gulfport-Biloxi International Airport Parking Management | Driver | Planned |
| request for payment | Gulfport-Biloxi International Airport Parking Management | Gulfport-Biloxi International Airport Parking Card | Planned |
| secure area surveillance data | Gulfport-Biloxi International Airport Security Monitoring System | Gulfport-Biloxi International Airport Operations Center | Existing |
| intermodal freight event information | Intermodal Rail Freight Facility | City of Biloxi TOC | Planned |
| intermodal freight event information | Intermodal Rail Freight Facility | City of Gulfport TOC | Planned |
| intermodal freight event information | Intermodal Rail Freight Facility | Local City/County TOCs | Planned |
| intermodal freight archive data | Intermodal Rail Freight Facility | MDOT CVISN Credentialing Infrastructure System | Planned |
| intermodal freight event information | Intermodal Rail Freight Facility | MDOT District 6 TOC | Planned |
| archive requests | Local City/County Databases | City/County 911 Dispatch Centers | Planned |
| archive status | Local City/County Databases | City/County 911 Dispatch Centers | Planned |
| archive requests | Local City/County Databases | County Emergency Operations Centers | Planned |
| archive status | Local City/County Databases | County Emergency Operations Centers | Planned |
| archive coordination | Local City/County Databases | GRPC MPO Databases | Planned |
| archive requests | Local City/County Databases | Local City/County Public Works | Planned |
| archive status | Local City/County Databases | Local City/County Public Works | Planned |
| archive requests | Local City/County Databases | Local City/County TOCs | Planned |
| archive status | Local City/County Databases | Local City/County TOCs | Planned |
| maintenance and construction work plan | Local City/County Public Works | Biloxi and Gulfport Multimodal Transit Centers | Planned |
| work zone information | Local City/County Public Works | Biloxi and Gulfport Multimodal Transit Centers | Planned |
| work plan coordination | Local City/County Public Works | City of Biloxi Public Works | Planned |
| work plan coordination | Local City/County Public Works | City of Gulfport Public Works | Planned |
| work plan coordination | Local City/County Public Works | City of Pascagoula Public Works | Planned |
| current asset restrictions | Local City/County Public Works | City/County 911 Dispatch Centers | Planned |
| maintenance and construction work plans | Local City/County Public Works | City/County 911 Dispatch Centers | Planned |
| work zone information | Local City/County Public Works | City/County 911 Dispatch Centers | Planned |

| Architecture Flow Name | Source | Destination | Status |
|---|---|---|---|
| maintenance and construction work plans | Local City/County Public Works | Coast Transit Authority | Planned |
| work zone information | Local City/County Public Works | Coast Transit Authority | Planned |
| alert status | Local City/County Public Works | County Emergency Operations Centers | Existing |
| emergency plan coordination | Local City/County Public Works | County Emergency Operations Centers | Existing |
| maintenance and construction resource response | Local City/County Public Works | County Emergency Operations Centers | Planned |
| maintenance and construction archive data | Local City/County Public Works | Local City/County Databases | Planned |
| equipment maintenance status | Local City/County Public Works | Local City/County TOCs | Planned |
| maintenance and construction work plans | Local City/County Public Works | Local City/County TOCs | Planned |
| work zone information | Local City/County Public Works | Local City/County TOCs | Planned |
| roadway information system data | Local City/County Public Works | Local City/County TOCs Roadside Equipment | Planned |
| work plan coordination | Local City/County Public Works | MDOT District 6 Maintenance and Construction Offices | Planned |
| maintenance and construction work plans | Local City/County Public Works | Rail Companies | Planned |
| work plan feedback | Local City/County Public Works | Rail Companies | Planned |
| emergency plan coordination | Local City/County TOCs | City/County 911 Dispatch Centers | Existing |
| emergency traffic control information | Local City/County TOCs | City/County 911 Dispatch Centers | Planned |
| incident information | Local City/County TOCs | City/County 911 Dispatch Centers | Existing |
| resource deployment status | Local City/County TOCs | City/County 911 Dispatch Centers | Planned |
| road network conditions | Local City/County TOCs | City/County 911 Dispatch Centers | Planned |
| traffic images | Local City/County TOCs | City/County 911 Dispatch Centers | Planned |
| request transit information | Local City/County TOCs | Coast Transit Authority | Planned |
| road network conditions | Local City/County TOCs | Coast Transit Authority | Planned |
| traffic control priority status | Local City/County TOCs | Coast Transit Authority | Planned |
| alert status | Local City/County TOCs | County Emergency Operations Centers | Existing |
| emergency plan coordination | Local City/County TOCs | County Emergency Operations Centers | Existing |
| emergency traffic control information | Local City/County TOCs | County Emergency Operations Centers | Planned |
| resource deployment status | Local City/County TOCs | County Emergency Operations Centers | Planned |
| road network conditions | Local City/County TOCs | County Emergency Operations Centers | Planned |

| Architecture Flow Name | Source | Destination | Status |
|---|---|---|---|
| road network status assessment | Local City/County TOCs | County Emergency Operations Centers | Planned |
| traffic images | Local City/County TOCs | County Emergency Operations Centers | Planned |
| event confirmation | Local City/County TOCs | Event Promoters and Traffic Generators | Existing |
| traffic information coordination | Local City/County TOCs | GRPC MPO | Existing |
| intermodal freight traffic confirmation | Local City/County TOCs | Intermodal Rail Freight Facility | Planned |
| traffic archive data | Local City/County TOCs | Local City/County Databases | Planned |
| field equipment status | Local City/County TOCs | Local City/County Public Works | Planned |
| work plan feedback | Local City/County TOCs | Local City/County Public Works | Planned |
| hri control data | Local City/County TOCs | Local City/County TOCs Roadside Equipment | Planned |
| hri request | Local City/County TOCs | Local City/County TOCs Roadside Equipment | Planned |
| roadway information system data | Local City/County TOCs | Local City/County TOCs Roadside Equipment | Planned |
| signal control data | Local City/County TOCs | Local City/County TOCs Roadside Equipment | Planned |
| video surveillance control | Local City/County TOCs | Local City/County TOCs Roadside Equipment | Planned |
| traffic control coordination | Local City/County TOCs | MDOT District 6 TOC | Planned |
| traffic information coordination | Local City/County TOCs | MDOT District 6 TOC | Planned |
| hri advisories | Local City/County TOCs | Rail Companies | Planned |
| roadway information system status | Local City/County TOCs Roadside Equipment | Local City/County Public Works | Planned |
| hri status | Local City/County TOCs Roadside Equipment | Local City/County TOCs | Planned |
| request for right-of-way | Local City/County TOCs Roadside Equipment | Local City/County TOCs | Planned |
| roadway information system status | Local City/County TOCs Roadside Equipment | Local City/County TOCs | Planned |
| signal control status | Local City/County TOCs Roadside Equipment | Local City/County TOCs | Planned |
| traffic images | Local City/County TOCs Roadside Equipment | Local City/County TOCs | Planned |
| hri operational status | Local City/County TOCs Roadside Equipment | Railroad Wayside Equipment | Planned |
| archive requests | MDOT Accident Database | MHP Dispatch Centers | Existing |
| archive status | MDOT Accident Database | MHP Dispatch Centers | Existing |
| archive requests | MDOT Accident Database | MHP District 8 Offices | Existing |
| archive status | MDOT Accident Database | MHP District 8 Offices | Existing |
| incident notification | MDOT Cellular Phone System for Incident Reporting | MDOT District 6 TOC | Planned |
| archive requests | MDOT CVISN Credentialing Infrastructure System | Intermodal Rail Freight Facility | Planned |
| archive status | MDOT CVISN Credentialing Infrastructure System | Intermodal Rail Freight Facility | Planned |

| Architecture Flow Name | Source | Destination | Status |
|---|---|---|---|
| credentials information | MDOT CVISN Credentialing Infrastructure System | MDOT District 6 PrePass System | Existing |
| credentials status information | MDOT CVISN Credentialing Infrastructure System | MDOT District 6 PrePass System | Existing |
| safety inspection report | MDOT CVISN Credentialing Infrastructure System | MDOT District 6 PrePass System | Existing |
| safety status information | MDOT CVISN Credentialing Infrastructure System | MDOT District 6 PrePass System | Existing |
| safety inspection report | MDOT CVISN Credentialing Infrastructure System | MDOT District 6 Weigh-in-Motion Stations | Existing |
| safety status information | MDOT CVISN Credentialing Infrastructure System | MDOT District 6 Weigh-in-Motion Stations | Existing |
| archive requests | MDOT CVISN Credentialing Infrastructure System | MDOT ExpressPass Permitting System | Existing |
| archive status | MDOT CVISN Credentialing Infrastructure System | MDOT ExpressPass Permitting System | Existing |
| credential fee coordination | MDOT CVISN Credentialing Infrastructure System | MDOT ExpressPass Permitting System | Existing |
| credentials information | MDOT CVISN Credentialing Infrastructure System | MDOT ExpressPass Permitting System | Existing |
| credentials status information | MDOT CVISN Credentialing Infrastructure System | MDOT ExpressPass Permitting System | Existing |
| route restrictions | MDOT CVISN Credentialing Infrastructure System | MDOT ExpressPass Permitting System | Existing |
| safety status information | MDOT CVISN Credentialing Infrastructure System | MDOT ExpressPass Permitting System | Existing |
| accident report | MDOT CVISN Credentialing Infrastructure System | MHP District 8 Offices | Existing |
| citation | MDOT CVISN Credentialing Infrastructure System | MHP District 8 Offices | Existing |
| violation notification | MDOT CVISN Credentialing Infrastructure System | MHP District 8 Offices | Existing |
| archive requests | MDOT CVISN Credentialing Infrastructure System | Mississippi Public Service Commission SAFETYNET | Existing |
| archive status | MDOT CVISN Credentialing Infrastructure System | Mississippi Public Service Commission SAFETYNET | Existing |
| credential fee coordination | MDOT CVISN Credentialing Infrastructure System | Mississippi Public Service Commission SAFETYNET | Existing |
| credentials information | MDOT CVISN Credentialing Infrastructure System | Mississippi Public Service Commission SAFETYNET | Existing |
| credentials status information | MDOT CVISN Credentialing Infrastructure System | Mississippi Public Service Commission SAFETYNET | Existing |
| archive requests | MDOT CVISN Credentialing Infrastructure System | Mississippi State Tax Commission Commercial Vehicle Databases | Existing |
| archive status | MDOT CVISN Credentialing Infrastructure System | Mississippi State Tax Commission Commercial Vehicle Databases | Existing |
| credential fee coordination | MDOT CVISN Credentialing Infrastructure System | Mississippi State Tax Commission Commercial Vehicle Databases | Existing |
| credentials information | MDOT CVISN Credentialing Infrastructure System | Mississippi State Tax Commission Commercial Vehicle Databases | Existing |
| credentials status information | MDOT CVISN Credentialing Infrastructure System | Mississippi State Tax Commission Commercial Vehicle Databases | Existing |

| Architecture Flow Name | Source | Destination | Status |
|---|---|---|---|
| accident report | MDOT CVISN Credentialing Infrastructure System | Private Trucking Companies | Existing |
| citation | MDOT CVISN Credentialing Infrastructure System | Private Trucking Companies | Existing |
| compliance review report | MDOT CVISN Credentialing Infrastructure System | Private Trucking Companies | Existing |
| credentials information | MDOT CVISN Credentialing Infrastructure System | Private Trucking Companies | Existing |
| credentials status information | MDOT CVISN Credentialing Infrastructure System | Private Trucking Companies | Existing |
| route restrictions | MDOT CVISN Credentialing Infrastructure System | Private Trucking Companies | Existing |
| safety inspection report | MDOT CVISN Credentialing Infrastructure System | Private Trucking Companies | Existing |
| safety status information | MDOT CVISN Credentialing Infrastructure System | Private Trucking Companies | Existing |
| driver information | MDOT District 6 Drawbridge Systems | Driver | Planned |
| request for right-of-way | MDOT District 6 Drawbridge Systems | MDOT District 6 TOC | Planned |
| roadway information system status | MDOT District 6 Drawbridge Systems | MDOT District 6 TOC | Planned |
| signal control status | MDOT District 6 Drawbridge Systems | MDOT District 6 TOC | Planned |
| driver information | MDOT District 6 Fog Detection Systems | Driver | Planned |
| environmental conditions data | MDOT District 6 Fog Detection Systems | MDOT District 6 Maintenance and Construction Offices | Planned |
| environmental conditions data | MDOT District 6 Fog Detection Systems | MDOT District 6 TOC | Planned |
| roadway equipment coordination | MDOT District 6 Fog Detection Systems | MDOT District 6 Weather Sensors | Planned |
| roadway information system status | MDOT District 6 Highway Advisory Radio | MDOT District 6 TOC | Planned |
| emergency dispatch response | MDOT District 6 Highway Service Patrol Vehicles | MDOT District 6 TOC | Planned |
| emergency vehicle tracking data | MDOT District 6 Highway Service Patrol Vehicles | MDOT District 6 TOC | Planned |
| incident status | MDOT District 6 Highway Service Patrol Vehicles | MDOT District 6 TOC | Planned |
| field device status | MDOT District 6 Maintenance and Construction Field Devices | MDOT District 6 Maintenance and Construction Offices | Planned |
| roadway information system status | MDOT District 6 Maintenance and Construction Field Devices | MDOT District 6 Maintenance and Construction Office | Planned |
| speed monitoring information | MDOT District 6 Maintenance and Construction Field Devices | MDOT District 6 Maintenance and Construction Offices | Planned |
| traffic images | MDOT District 6 Maintenance and Construction Field Devices | MDOT District 6 Maintenance and Construction Offices | Planned |
| work plan coordination | MDOT District 6 Maintenance and Construction Offices | City of Biloxi Public Works | Planned |
| work plan coordination | MDOT District 6 Maintenance and Construction Offices | City of Gulfport Public Works | Planned |

| Architecture Flow Name | Source | Destination | Status |
|---|---|---|---|
| work plan coordination | MDOT District 6 Maintenance and Construction Offices | City of Pascagoula Public Works | Planned |
| emergency plan coordination | MDOT District 6 Maintenance and Construction Offices | City/County 911 Dispatch Centers | Existing |
| maintenance and construction work plans | MDOT District 6 Maintenance and Construction Offices | City/County 911 Dispatch Centers | Planned |
| work zone information | MDOT District 6 Maintenance and Construction Offices | City/County 911 Dispatch Centers | Planned |
| alert status | MDOT District 6 Maintenance and Construction Offices | County Emergency Operations Centers | Existing |
| emergency plan coordination | MDOT District 6 Maintenance and Construction Offices | County Emergency Operations Centers | Existing |
| maintenance and construction resource response | MDOT District 6 Maintenance and Construction Offices | County Emergency Operations Centers | Planned |
| work plan coordination | MDOT District 6 Maintenance and Construction Offices | Local City/County Public Works | Planned |
| maintenance and construction work plans | MDOT District 6 Maintenance and Construction Offices | Local City/County TOCs | Planned |
| environmental sensors control | MDOT District 6 Maintenance and Construction Offices | MDOT District 6 Fog Detection Systems | Planned |
| roadway information system data | MDOT District 6 Maintenance and Construction Offices | MDOT District 6 Maintenance and Construction Field Devices | Planned |
| speed monitoring control | MDOT District 6 Maintenance and Construction Offices | MDOT District 6 Maintenance and Construction Field Devices | Planned |
| video surveillance control | MDOT District 6 Maintenance and Construction Offices | MDOT District 6 Maintenance and Construction Field Devices | Planned |
| roadway information system data | MDOT District 6 Maintenance and Construction Offices | MDOT District 6 Portable Dynamic Message Signs | Planned |
| incident information | MDOT District 6 Maintenance and Construction Offices | MDOT District 6 TOC | Existing |
| maintenance and construction resource response | MDOT District 6 Maintenance and Construction Offices | MDOT District 6 TOC | Planned |
| maintenance and construction work plans | MDOT District 6 Maintenance and Construction Offices | MDOT District 6 TOC | Planned |
| road weather information | MDOT District 6 Maintenance and Construction Offices | MDOT District 6 TOC | Planned |
| work zone information | MDOT District 6 Maintenance and Construction Offices | MDOT District 6 TOC | Planned |
| environmental sensors control | MDOT District 6 Maintenance and Construction Offices | MDOT District 6 Weather Sensors | Planned |
| maintenance and construction archive data | MDOT District 6 Maintenance and Construction Offices | MDOT Highway Performance Monitoring System | Existing |
| road weather information | MDOT District 6 Maintenance and Construction Offices | MDOT MSTraffic.com | Planned |
| work zone information | MDOT District 6 Maintenance and Construction Offices | MDOT MSTraffic.com | Existing |
| work zone information | MDOT District 6 Maintenance and Construction Offices | MDOT Statewide 511 System | Planned |

| Architecture Flow Name | Source | Destination | Status |
|---|---|---|---|
| current asset restrictions | MDOT District 6 Maintenance and Construction Offices | MDOT Traveler Information Repository | Planned |
| road weather information | MDOT District 6 Maintenance and Construction Offices | MDOT Traveler Information Repository | Planned |
| work zone information | MDOT District 6 Maintenance and Construction Offices | MDOT Traveler Information Repository | Planned |
| work zone information | MDOT District 6 Maintenance and Construction Offices | Media | Existing |
| alert status | MDOT District 6 Maintenance and Construction Offices | MEMA Emergency Operations Center | Existing |
| emergency plan coordination | MDOT District 6 Maintenance and Construction Offices | MEMA Emergency Operations Center | Existing |
| maintenance and construction resource response | MDOT District 6 Maintenance and Construction Offices | MEMA Emergency Operations Center | Planned |
| road network status assessment | MDOT District 6 Maintenance and Construction Offices | MEMA Emergency Operations Center | Planned |
| emergency plan coordination | MDOT District 6 Maintenance and Construction Offices | MHP Dispatch Centers | Existing |
| incident information | MDOT District 6 Maintenance and Construction Offices | MHP Dispatch Centers | Existing |
| maintenance and construction resource response | MDOT District 6 Maintenance and Construction Offices | MHP Dispatch Centers | Planned |
| maintenance and construction work plans | MDOT District 6 Maintenance and Construction Offices | MHP Dispatch Centers | Planned |
| road weather information | MDOT District 6 Maintenance and Construction Offices | MHP Dispatch Centers | Planned |
| work zone information | MDOT District 6 Maintenance and Construction Offices | MHP Dispatch Centers | Planned |
| alert status | MDOT District 6 Maintenance and Construction Offices | Mississippi Emergency Management Agency | Existing |
| emergency plan coordination | MDOT District 6 Maintenance and Construction Offices | Mississippi Emergency Management Agency | Existing |
| alert status | MDOT District 6 Maintenance and Construction Offices | Mississippi Office of Homeland Security | Existing |
| emergency plan coordination | MDOT District 6 Maintenance and Construction Offices | Mississippi Office of Homeland Security | Existing |
| road weather information | MDOT District 6 Maintenance and Construction Offices | Mississippi Road/Weather Conditions Website | Planned |
| maintenance and construction work plans | MDOT District 6 Maintenance and Construction Offices | Rail Companies | Planned |
| work plan feedback | MDOT District 6 Maintenance and Construction Offices | Rail Companies | Planned |
| maintenance and construction vehicle conditions | MDOT District 6 Maintenance Vehicles | MDOT District 6 Maintenance and Construction Offices | Planned |
| maintenance and construction vehicle location data | MDOT District 6 Maintenance Vehicles | MDOT District 6 Maintenance and Construction Offices | Planned |
| maintenance and construction vehicle location data | MDOT District 6 Maintenance Vehicles | MDOT District 6 TOC | Planned |

| Architecture Flow Name | Source | Destination | Status |
|---|---|---|---|
| incident notification | MDOT District 6 Motorist Assistance Call Boxes | MHP Dispatch Centers | Existing |
| roadway information system status | MDOT District 6 Portable Dynamic Message Signs | MDOT District 6 Maintenance and Construction Offices | Planned |
| roadway information system status | MDOT District 6 Portable Dynamic Message Signs | MDOT District 6 TOC | Existing |
| accident report | MDOT District 6 PrePass System | MDOT CVISN Credentialing Infrastructure System | Existing |
| citation | MDOT District 6 PrePass System | MDOT CVISN Credentialing Infrastructure System | Existing |
| daily site activity data | MDOT District 6 PrePass System | MDOT CVISN Credentialing Infrastructure System | Existing |
| safety inspection report | MDOT District 6 PrePass System | MDOT CVISN Credentialing Infrastructure System | Existing |
| violation notification | MDOT District 6 PrePass System | MDOT CVISN Credentialing Infrastructure System | Existing |
| electronic screening request | MDOT District 6 PrePass System | Private Trucking Companies Commercial Vehicles | Existing |
| pass/pull-in | MDOT District 6 PrePass System | Private Trucking Companies Commercial Vehicles | Existing |
| safety inspection record | MDOT District 6 PrePass System | Private Trucking Companies Commercial Vehicles | Existing |
| safety inspection request | MDOT District 6 PrePass System | Private Trucking Companies Commercial Vehicles | Existing |
| screening event record | MDOT District 6 PrePass System | Private Trucking Companies Commercial Vehicles | Existing |
| hri status | MDOT District 6 Railroad Crossing Control | MDOT District 6 TOC | Planned |
| intersection blockage notification | MDOT District 6 Railroad Crossing Control | MDOT District 6 TOC | Planned |
| hri operational status | MDOT District 6 Railroad Crossing Control | Railroad Wayside Equipment | Planned |
| intersection blockage notification | MDOT District 6 Railroad Crossing Control | Railroad Wayside Equipment | Planned |
| secure area surveillance data | MDOT District 6 Security Monitoring System | MDOT District 6 TOC | Existing |
| driver information | MDOT District 6 Speed Warning System | Driver | Planned |
| traffic violation notification | MDOT District 6 Speed Warning System | MHP District 8 Offices | Planned |
| emergency traffic control information | MDOT District 6 TOC | Biloxi and Gulfport Multimodal Transit Centers | Planned |
| traffic control priority status | MDOT District 6 TOC | Biloxi and Gulfport Multimodal Transit Centers | Planned |
| transit information request | MDOT District 6 TOC | Biloxi and Gulfport Multimodal Transit Centers | Planned |
| traffic control coordination | MDOT District 6 TOC | City of Biloxi TOC | Planned |
| traffic information coordination | MDOT District 6 TOC | City of Biloxi TOC | Planned |
| traffic control coordination | MDOT District 6 TOC | City of Gulfport TOC | Planned |

| Architecture Flow Name | Source | Destination | Status |
|---|---|---|---|
| traffic information coordination | MDOT District 6 TOC | City of Gulfport TOC | Planned |
| traffic control coordination | MDOT District 6 TOC | City of Pascagoula TOC | Planned |
| traffic information coordination | MDOT District 6 TOC | City of Pascagoula TOC | Planned |
| emergency plan coordination | MDOT District 6 TOC | City/County 911 Dispatch Centers | Existing |
| emergency traffic control information | MDOT District 6 TOC | City/County 911 Dispatch Centers | Planned |
| incident information | MDOT District 6 TOC | City/County 911 Dispatch Centers | Existing |
| resource deployment status | MDOT District 6 TOC | City/County 911 Dispatch Centers | Planned |
| road network conditions | MDOT District 6 TOC | City/County 911 Dispatch Centers | Planned |
| request transit information | MDOT District 6 TOC | Coast Transit Authority | Planned |
| road network conditions | MDOT District 6 TOC | Coast Transit Authority | Planned |
| traffic control priority status | MDOT District 6 TOC | Coast Transit Authority | Planned |
| alert status | MDOT District 6 TOC | County Emergency Operations Centers | Existing |
| emergency plan coordination | MDOT District 6 TOC | County Emergency Operations Centers | Existing |
| emergency traffic control information | MDOT District 6 TOC | County Emergency Operations Centers | Planned |
| resource deployment status | MDOT District 6 TOC | County Emergency Operations Centers | Planned |
| road network conditions | MDOT District 6 TOC | County Emergency Operations Centers | Planned |
| road network status assessment | MDOT District 6 TOC | County Emergency Operations Centers | Planned |
| event confirmation | MDOT District 6 TOC | Event Promoters and Traffic Generators | Existing |
| traffic information coordination | MDOT District 6 TOC | GRPC MPO | Existing |
| road network conditions | MDOT District 6 TOC | Gulfport-Biloxi International Airport Information System | Planned |
| emergency plan coordination | MDOT District 6 TOC | Gulfport-Biloxi International Airport Operations Center | Existing |
| emergency traffic control information | MDOT District 6 TOC | Gulfport-Biloxi International Airport Operations Center | Planned |
| incident information | MDOT District 6 TOC | Gulfport-Biloxi International Airport Operations Center | Existing |
| resource deployment status | MDOT District 6 TOC | Gulfport-Biloxi International Airport Operations Center | Planned |
| intermodal freight traffic confirmation | MDOT District 6 TOC | Intermodal Rail Freight Facility | Planned |
| traffic control coordination | MDOT District 6 TOC | Local City/County TOCs | Planned |

| Architecture Flow Name | Source | Destination | Status |
|---|---|---|---|
| traffic information coordination | MDOT District 6 TOC | Local City/County TOCs | Planned |
| incident notification response | MDOT District 6 TOC | MDOT Cellular Phone System for Incident Reporting | Planned |
| roadway information system data | MDOT District 6 TOC | MDOT District 6 Drawbridge Systems | Planned |
| signal control data | MDOT District 6 TOC | MDOT District 6 Drawbridge Systems | Planned |
| environmental sensors control | MDOT District 6 TOC | MDOT District 6 Fog Detection Systems | Planned |
| roadway information system data | MDOT District 6 TOC | MDOT District 6 Highway Advisory Radio | Planned |
| decision support information | MDOT District 6 TOC | MDOT District 6 Highway Service Patrol Vehicles | Planned |
| emergency dispatch requests | MDOT District 6 TOC | MDOT District 6 Highway Service Patrol Vehicles | Planned |
| suggested route | MDOT District 6 TOC | MDOT District 6 Highway Service Patrol Vehicles | Planned |
| field equipment status | MDOT District 6 TOC | MDOT District 6 Maintenance and Construction Offices | Existing |
| incident information | MDOT District 6 TOC | MDOT District 6 Maintenance and Construction Offices | Existing |
| maintenance and construction resource request | MDOT District 6 TOC | MDOT District 6 Maintenance and Construction Offices | Planned |
| road network conditions | MDOT District 6 TOC | MDOT District 6 Maintenance and Construction Offices | Planned |
| work plan feedback | MDOT District 6 TOC | MDOT District 6 Maintenance and Construction Offices | Planned |
| roadway information system data | MDOT District 6 TOC | MDOT District 6 Portable Dynamic Message Signs | Existing |
| hri control data | MDOT District 6 TOC | MDOT District 6 Railroad Crossing Control | Planned |
| hri request | MDOT District 6 TOC | MDOT District 6 Railroad Crossing Control | Planned |
| secure area surveillance control | MDOT District 6 TOC | MDOT District 6 Security Monitoring System | Existing |
| traffic sensor control | MDOT District 6 TOC | MDOT District 6 Traffic Sensors | Existing |
| hri control data | MDOT District 6 TOC | MDOT District 6 Traffic Signal Systems | Existing |
| hri request | MDOT District 6 TOC | MDOT District 6 Traffic Signal Systems | Existing |
| signal control data | MDOT District 6 TOC | MDOT District 6 Traffic Signal Systems | Existing |
| video surveillance control | MDOT District 6 TOC | MDOT District 6 Video Surveillance Equipment | Existing |
| traffic archive data | MDOT District 6 TOC | MDOT Highway Performance Monitoring System | Existing |
| road network conditions | MDOT District 6 TOC | MDOT MSTraffic.com | Existing |
| road network conditions | MDOT District 6 TOC | MDOT Statewide 511 System | Planned |

| Architecture Flow Name | Source | Destination | Status |
|---|---|---|---|
| traffic control coordination | MDOT District 6 TOC | MDOT Statewide TMC | Planned |
| traffic information coordination | MDOT District 6 TOC | MDOT Statewide TMC | Planned |
| road network conditions | MDOT District 6 TOC | MDOT Traveler Information Repository | Planned |
| road network conditions | MDOT District 6 TOC | Media | Planned |
| alert status | MDOT District 6 TOC | MEMA Emergency Operations Center | Existing |
| emergency plan coordination | MDOT District 6 TOC | MEMA Emergency Operations Center | Existing |
| emergency traffic control information | MDOT District 6 TOC | MEMA Emergency Operations Center | Planned |
| resource deployment status | MDOT District 6 TOC | MEMA Emergency Operations Center | Planned |
| road network conditions | MDOT District 6 TOC | MEMA Emergency Operations Center | Planned |
| road network status assessment | MDOT District 6 TOC | MEMA Emergency Operations Center | Planned |
| emergency plan coordination | MDOT District 6 TOC | MHP Dispatch Centers | Existing |
| emergency traffic control information | MDOT District 6 TOC | MHP Dispatch Centers | Planned |
| incident information | MDOT District 6 TOC | MHP Dispatch Centers | Existing |
| resource deployment status | MDOT District 6 TOC | MHP Dispatch Centers | Planned |
| road network conditions | MDOT District 6 TOC | MHP Dispatch Centers | Planned |
| traffic images | MDOT District 6 TOC | MHP Dispatch Centers | Planned |
| emergency plan coordination | MDOT District 6 TOC | MHP District 8 Offices | Existing |
| request for enforcement | MDOT District 6 TOC | MHP District 8 Offices | Planned |
| alert status | MDOT District 6 TOC | Mississippi Bureau of Investigations | Planned |
| incident information | MDOT District 6 TOC | Mississippi Department of Environmental Quality | Planned |
| alert status | MDOT District 6 TOC | Mississippi Emergency Management Agency | Existing |
| emergency plan coordination | MDOT District 6 TOC | Mississippi Emergency Management Agency | Existing |
| alert status | MDOT District 6 TOC | Mississippi Office of Homeland Security | Existing |
| emergency plan coordination | MDOT District 6 TOC | Mississippi Office of Homeland Security | Existing |
| hri advisories | MDOT District 6 TOC | Rail Companies | Existing |
| traffic flow | MDOT District 6 Traffic Sensors | MDOT District 6 TOC | Existing |
| roadside archive data | MDOT District 6 Traffic Sensors | MDOT Highway Performance Monitoring System | Existing |
| field device status | MDOT District 6 Traffic Signal Systems | MDOT District 6 TOC | Existing |

| Architecture Flow Name | Source | Destination | Status |
|---|---|---|---|
| request for right-of-way | MDOT District 6 Traffic Signal Systems | MDOT District 6 TOC | Existing |
| signal control status | MDOT District 6 Traffic Signal Systems | MDOT District 6 TOC | Existing |
| hri operational status | MDOT District 6 Traffic Signal Systems | Railroad Wayside Equipment | Existing |
| traffic images | MDOT District 6 Video Surveillance Equipment | MDOT District 6 TOC | Existing |
| roadway equipment coordination | MDOT District 6 Weather Sensors | MDOT District 6 Fog Detection Systems | Planned |
| environmental conditions data | MDOT District 6 Weather Sensors | MDOT District 6 Maintenance and Construction Offices | Planned |
| accident report | MDOT District 6 Weigh-in-Motion Stations | MDOT CVISN Credentialing Infrastructure System | Existing |
| citation | MDOT District 6 Weigh-in-Motion Stations | MDOT CVISN Credentialing Infrastructure System | Existing |
| daily site activity data | MDOT District 6 Weigh-in-Motion Stations | MDOT CVISN Credentialing Infrastructure System | Existing |
| safety inspection report | MDOT District 6 Weigh-in-Motion Stations | MDOT CVISN Credentialing Infrastructure System | Existing |
| violation notification | MDOT District 6 Weigh-in-Motion Stations | MDOT CVISN Credentialing Infrastructure System | Existing |
| electronic screening request | MDOT District 6 Weigh-in-Motion Stations | Private Trucking Companies Commercial Vehicles | Existing |
| pass/pull-in | MDOT District 6 Weigh-in-Motion Stations | Private Trucking Companies Commercial Vehicles | Existing |
| request tag data | MDOT District 6 Weigh-in-Motion Stations | Private Trucking Companies Commercial Vehicles | Existing |
| safety inspection record | MDOT District 6 Weigh-in-Motion Stations | Private Trucking Companies Commercial Vehicles | Existing |
| safety inspection request | MDOT District 6 Weigh-in-Motion Stations | Private Trucking Companies Commercial Vehicles | Existing |
| screening event record | MDOT District 6 Weigh-in-Motion Stations | Private Trucking Companies Commercial Vehicles | Existing |
| commercial vehicle archive data | MDOT ExpressPass Permitting System | MDOT CVISN Credentialing Infrastructure System | Existing |
| credential fee coordination | MDOT ExpressPass Permitting System | MDOT CVISN Credentialing Infrastructure System | Existing |
| credentials information | MDOT ExpressPass Permitting System | MDOT CVISN Credentialing Infrastructure System | Existing |
| credentials status information | MDOT ExpressPass Permitting System | MDOT CVISN Credentialing Infrastructure System | Existing |
| route restrictions | MDOT ExpressPass Permitting System | MDOT CVISN Credentialing Infrastructure System | Existing |
| safety status information | MDOT ExpressPass Permitting System | MDOT CVISN Credentialing Infrastructure System | Existing |
| compliance review report | MDOT ExpressPass Permitting System | Private Trucking Companies | Existing |
| credentials information | MDOT ExpressPass Permitting System | Private Trucking Companies | Existing |
| credentials status information | MDOT ExpressPass Permitting System | Private Trucking Companies | Existing |

| Architecture Flow Name | Source | Destination | Status |
|---|---|---|---|
| route restrictions | MDOT ExpressPass Permitting System | Private Trucking Companies | Existing |
| archive requests | MDOT Highway Performance Monitoring System | MDOT District 6 Maintenance and Construction Offices | Existing |
| archive status | MDOT Highway Performance Monitoring System | MDOT District 6 Maintenance and Construction Offices | Existing |
| archive requests | MDOT Highway Performance Monitoring System | MDOT District 6 TOC | Existing |
| archive status | MDOT Highway Performance Monitoring System | MDOT District 6 TOC | Existing |
| data collection and monitoring control | MDOT Highway Performance Monitoring System | MDOT District 6 Traffic Sensors | Existing |
| ISP coordination | MDOT MSTraffic.com | MDOT Traveler Information Repository | Planned |
| broadcast information | MDOT MSTraffic.com | User Personal Computing Devices | Existing |
| emergency traveler information | MDOT MSTraffic.com | User Personal Computing Devices | Planned |
| transit information request | MDOT Statewide 511 System | Coast Transit Authority | Planned |
| alert status | MDOT Statewide 511 System | County Emergency Operations Centers | Planned |
| ISP coordination | MDOT Statewide 511 System | MDOT Traveler Information Repository | Planned |
| alert status | MDOT Statewide 511 System | MEMA Emergency Operations Center | Planned |
| alert status | MDOT Statewide 511 System | Mississippi Emergency Management Agency | Planned |
| alert status | MDOT Statewide 511 System | Mississippi Office of Homeland Security | Planned |
| voice-based alert notification | MDOT Statewide 511 System | Telecommunications System for Traveler Information | Planned |
| voice-based traveler information | MDOT Statewide 511 System | Telecommunications System for Traveler Information | Planned |
| traffic control coordination | MDOT Statewide TMC | MDOT District 6 TOC | Planned |
| traffic information coordination | MDOT Statewide TMC | MDOT District 6 TOC | Planned |
| transit information request | MDOT Traveler Information Repository | Coast Transit Authority | Planned |
| alert status | MDOT Traveler Information Repository | County Emergency Operations Centers | Planned |
| ISP coordination | MDOT Traveler Information Repository | Gulfport-Biloxi International Airport Information System | Planned |
| ISP coordination | MDOT Traveler Information Repository | MDOT MSTraffic.com | Planned |
| ISP coordination | MDOT Traveler Information Repository | MDOT Statewide 511 System | Planned |
| traveler information for media | MDOT Traveler Information Repository | Media | Planned |
| alert status | MDOT Traveler Information Repository | MEMA Emergency Operations Center | Planned |

| Architecture Flow Name | Source | Destination | Status |
|---|---|---|---|
| alert status | MDOT Traveler Information Repository | Mississippi Bureau of Investigations | Planned |
| alert status | MDOT Traveler Information Repository | Mississippi Emergency Management Agency | Planned |
| alert status | MDOT Traveler Information Repository | Mississippi Office of Homeland Security | Planned |
| media information request | Media | Biloxi and Gulfport Multimodal Transit Centers | Planned |
| media information request | Media | City of Pascagoula TOC | Planned |
| media information request | Media | City/County 911 Dispatch Centers | Existing |
| media information request | Media | Gulfport-Biloxi International Airport Information System | Existing |
| media information request | Media | Gulfport-Biloxi International Airport Operations Center | Existing |
| media information request | Media | MDOT District 6 TOC | Planned |
| media information request | Media | MDOT Traveler Information Repository | Planned |
| media information request | Media | MEMA Emergency Operations Center | Existing |
| media information request | Media | Mississippi Emergency Management Agency | Existing |
| media information request | Media | Mississippi Office of Homeland Security | Existing |
| alert notification | MEMA Emergency Operations Center | Biloxi and Gulfport Multimodal Transit Centers | Planned |
| emergency plan coordination | MEMA Emergency Operations Center | Biloxi and Gulfport Multimodal Transit Centers | Planned |
| emergency transit service request | MEMA Emergency Operations Center | Biloxi and Gulfport Multimodal Transit Centers | Planned |
| evacuation information | MEMA Emergency Operations Center | Biloxi and Gulfport Multimodal Transit Centers | Planned |
| transportation system status | MEMA Emergency Operations Center | Biloxi and Gulfport Multimodal Transit Centers | Planned |
| alert notification coordination | MEMA Emergency Operations Center | City/County 911 Dispatch Centers | Existing |
| emergency plan coordination | MEMA Emergency Operations Center | City/County 911 Dispatch Centers | Existing |
| evacuation coordination | MEMA Emergency Operations Center | City/County 911 Dispatch Centers | Existing |
| incident command information coordination | MEMA Emergency Operations Center | City/County 911 Dispatch Centers | Existing |
| incident report | MEMA Emergency Operations Center | City/County 911 Dispatch Centers | Existing |
| incident response coordination | MEMA Emergency Operations Center | City/County 911 Dispatch Centers | Existing |
| resource coordination | MEMA Emergency Operations Center | City/County 911 Dispatch Centers | Existing |

| Architecture Flow Name | Source | Destination | Status |
|---|---|---|---|
| transportation system status | MEMA Emergency Operations Center | City/County 911 Dispatch Centers | Planned |
| alert notification | MEMA Emergency Operations Center | Coast Transit Authority | Existing |
| emergency plan coordination | MEMA Emergency Operations Center | Coast Transit Authority | Existing |
| emergency transit service request | MEMA Emergency Operations Center | Coast Transit Authority | Existing |
| evacuation information | MEMA Emergency Operations Center | Coast Transit Authority | Existing |
| transportation system status | MEMA Emergency Operations Center | Coast Transit Authority | Planned |
| alert notification coordination | MEMA Emergency Operations Center | County Emergency Operations Centers | Existing |
| emergency plan coordination | MEMA Emergency Operations Center | County Emergency Operations Centers | Existing |
| evacuation coordination | MEMA Emergency Operations Center | County Emergency Operations Centers | Existing |
| incident command information coordination | MEMA Emergency Operations Center | County Emergency Operations Centers | Existing |
| incident report | MEMA Emergency Operations Center | County Emergency Operations Centers | Existing |
| incident response coordination | MEMA Emergency Operations Center | County Emergency Operations Centers | Existing |
| resource coordination | MEMA Emergency Operations Center | County Emergency Operations Centers | Existing |
| transportation system status | MEMA Emergency Operations Center | County Emergency Operations Centers | Planned |
| alert notification coordination | MEMA Emergency Operations Center | Gulfport-Biloxi International Airport Operations Center | Existing |
| emergency plan coordination | MEMA Emergency Operations Center | Gulfport-Biloxi International Airport Operations Center | Existing |
| emergency traffic control request | MEMA Emergency Operations Center | Gulfport-Biloxi International Airport Operations Center | Planned |
| evacuation coordination | MEMA Emergency Operations Center | Gulfport-Biloxi International Airport Operations Center | Existing |
| incident command information coordination | MEMA Emergency Operations Center | Gulfport-Biloxi International Airport Operations Center | Existing |
| incident report | MEMA Emergency Operations Center | Gulfport-Biloxi International Airport Operations Center | Existing |
| incident response coordination | MEMA Emergency Operations Center | Gulfport-Biloxi International Airport Operations Center | Existing |
| resource coordination | MEMA Emergency Operations Center | Gulfport-Biloxi International Airport Operations Center | Existing |
| threat information coordination | MEMA Emergency Operations Center | Gulfport-Biloxi International Airport Operations Center | Planned |
| transportation system status | MEMA Emergency Operations Center | Gulfport-Biloxi International Airport Operations Center | Planned |
| alert notification | MEMA Emergency Operations Center | MDOT District 6 Maintenance and Construction Offices | Existing |

| Architecture Flow Name | Source | Destination | Status |
|---|---|---|---|
| emergency plan coordination | MEMA Emergency Operations Center | MDOT District 6 Maintenance and Construction Offices | Existing |
| evacuation information | MEMA Emergency Operations Center | MDOT District 6 Maintenance and Construction Offices | Existing |
| maintenance and construction resource request | MEMA Emergency Operations Center | MDOT District 6 Maintenance and Construction Offices | Planned |
| transportation system status | MEMA Emergency Operations Center | MDOT District 6 Maintenance and Construction Offices | Planned |
| alert notification | MEMA Emergency Operations Center | MDOT District 6 TOC | Existing |
| emergency plan coordination | MEMA Emergency Operations Center | MDOT District 6 TOC | Existing |
| emergency traffic control request | MEMA Emergency Operations Center | MDOT District 6 TOC | Planned |
| evacuation information | MEMA Emergency Operations Center | MDOT District 6 TOC | Existing |
| resource request | MEMA Emergency Operations Center | MDOT District 6 TOC | Planned |
| transportation system status | MEMA Emergency Operations Center | MDOT District 6 TOC | Planned |
| alert notification | MEMA Emergency Operations Center | MDOT Statewide 511 System | Planned |
| alert notification | MEMA Emergency Operations Center | MDOT Traveler Information Repository | Planned |
| evacuation information | MEMA Emergency Operations Center | MDOT Traveler Information Repository | Planned |
| incident information for media | MEMA Emergency Operations Center | Media | Existing |
| alert notification coordination | MEMA Emergency Operations Center | MHP Dispatch Centers | Existing |
| emergency plan coordination | MEMA Emergency Operations Center | MHP Dispatch Centers | Existing |
| evacuation coordination | MEMA Emergency Operations Center | MHP Dispatch Centers | Existing |
| incident command information coordination | MEMA Emergency Operations Center | MHP Dispatch Centers | Existing |
| incident report | MEMA Emergency Operations Center | MHP Dispatch Centers | Existing |
| incident response coordination | MEMA Emergency Operations Center | MHP Dispatch Centers | Existing |
| resource coordination | MEMA Emergency Operations Center | MHP Dispatch Centers | Existing |
| transportation system status | MEMA Emergency Operations Center | MHP Dispatch Centers | Planned |
| alert notification coordination | MEMA Emergency Operations Center | Mississippi Bureau of Investigations | Existing |
| alert notification coordination | MEMA Emergency Operations Center | Mississippi Department of Environmental Quality | Existing |
| emergency plan coordination | MEMA Emergency Operations Center | Mississippi Department of Environmental Quality | Existing |

| Architecture Flow Name | Source | Destination | Status |
|---|---|---|---|
| alert notification coordination | MEMA Emergency Operations Center | Mississippi Emergency Management Agency | Existing |
| emergency plan coordination | MEMA Emergency Operations Center | Mississippi Emergency Management Agency | Existing |
| evacuation coordination | MEMA Emergency Operations Center | Mississippi Emergency Management Agency | Existing |
| alert notification coordination | MEMA Emergency Operations Center | Mississippi Office of Homeland Security | Existing |
| emergency plan coordination | MEMA Emergency Operations Center | Mississippi Office of Homeland Security | Existing |
| evacuation coordination | MEMA Emergency Operations Center | Mississippi Office of Homeland Security | Existing |
| alert notification coordination | MEMA Emergency Operations Center | Neighboring State Emergency Management Centers | Existing |
| emergency plan coordination | MEMA Emergency Operations Center | Neighboring State Emergency Management Centers | Existing |
| evacuation coordination | MEMA Emergency Operations Center | Neighboring State Emergency Management Centers | Existing |
| incident command information coordination | MEMA Emergency Operations Center | Neighboring State Emergency Management Centers | Existing |
| incident report | MEMA Emergency Operations Center | Neighboring State Emergency Management Centers | Existing |
| incident response coordination | MEMA Emergency Operations Center | Neighboring State Emergency Management Centers | Existing |
| resource coordination | MEMA Emergency Operations Center | Neighboring State Emergency Management Centers | Existing |
| threat information coordination | MEMA Emergency Operations Center | Neighboring State Emergency Management Centers | Planned |
| incident notification response | MHP Dispatch Centers | *HP Cellular Phone System | Existing |
| emergency plan coordination | MHP Dispatch Centers | Biloxi and Gulfport Multimodal Transit Centers | Planned |
| emergency transit service request | MHP Dispatch Centers | Biloxi and Gulfport Multimodal Transit Centers | Planned |
| incident information | MHP Dispatch Centers | Biloxi and Gulfport Multimodal Transit Centers | Planned |
| incident response status | MHP Dispatch Centers | Biloxi and Gulfport Multimodal Transit Centers | Planned |
| emergency plan coordination | MHP Dispatch Centers | City/County 911 Dispatch Centers | Existing |
| evacuation coordination | MHP Dispatch Centers | City/County 911 Dispatch Centers | Existing |
| incident command information coordination | MHP Dispatch Centers | City/County 911 Dispatch Centers | Existing |
| incident report | MHP Dispatch Centers | City/County 911 Dispatch Centers | Existing |
| incident response coordination | MHP Dispatch Centers | City/County 911 Dispatch Centers | Existing |
| resource coordination | MHP Dispatch Centers | City/County 911 Dispatch Centers | Existing |
| emergency plan coordination | MHP Dispatch Centers | Coast Transit Authority | Planned |

| Architecture Flow Name | Source | Destination | Status |
|---|---|---|---|
| emergency transit service request | MHP Dispatch Centers | Coast Transit Authority | Planned |
| incident information | MHP Dispatch Centers | Coast Transit Authority | Planned |
| incident response status | MHP Dispatch Centers | Coast Transit Authority | Planned |
| alert notification coordination | MHP Dispatch Centers | County Emergency Operations Centers | Existing |
| emergency plan coordination | MHP Dispatch Centers | County Emergency Operations Centers | Existing |
| evacuation coordination | MHP Dispatch Centers | County Emergency Operations Centers | Existing |
| incident command information coordination | MHP Dispatch Centers | County Emergency Operations Centers | Existing |
| incident report | MHP Dispatch Centers | County Emergency Operations Centers | Existing |
| incident response coordination | MHP Dispatch Centers | County Emergency Operations Centers | Existing |
| resource coordination | MHP Dispatch Centers | County Emergency Operations Centers | Existing |
| emergency archive data | MHP Dispatch Centers | Emergency Response Performance Information | Existing |
| incident notification response | MHP Dispatch Centers | Emergency Telecommunications System | Existing |
| event confirmation | MHP Dispatch Centers | Event Promoters and Traffic Generators | Existing |
| emergency archive data | MHP Dispatch Centers | MDOT Accident Database | Existing |
| emergency plan coordination | MHP Dispatch Centers | MDOT District 6 Maintenance and Construction Offices | Existing |
| incident information | MHP Dispatch Centers | MDOT District 6 Maintenance and Construction Offices | Existing |
| incident response status | MHP Dispatch Centers | MDOT District 6 Maintenance and Construction Offices | Existing |
| maintenance and construction resource request | MHP Dispatch Centers | MDOT District 6 Maintenance and Construction Offices | Planned |
| work plan feedback | MHP Dispatch Centers | MDOT District 6 Maintenance and Construction Offices | Planned |
| incident notification response | MHP Dispatch Centers | MDOT District 6 Motorist Assistance Call Boxes | Existing |
| emergency plan coordination | MHP Dispatch Centers | MDOT District 6 TOC | Existing |
| emergency traffic control request | MHP Dispatch Centers | MDOT District 6 TOC | Planned |
| incident information | MHP Dispatch Centers | MDOT District 6 TOC | Existing |
| incident response status | MHP Dispatch Centers | MDOT District 6 TOC | Existing |
| resource request | MHP Dispatch Centers | MDOT District 6 TOC | Planned |
| alert notification coordination | MHP Dispatch Centers | MEMA Emergency Operations Center | Existing |
| emergency plan coordination | MHP Dispatch Centers | MEMA Emergency Operations Center | Existing |
| evacuation coordination | MHP Dispatch Centers | MEMA Emergency Operations Center | Existing |

| Architecture Flow Name | Source | Destination | Status |
|---|---|---|---|
| incident command information coordination | MHP Dispatch Centers | MEMA Emergency Operations Center | Existing |
| incident report | MHP Dispatch Centers | MEMA Emergency Operations Center | Existing |
| incident response coordination | MHP Dispatch Centers | MEMA Emergency Operations Center | Existing |
| resource coordination | MHP Dispatch Centers | MEMA Emergency Operations Center | Existing |
| emergency plan coordination | MHP Dispatch Centers | MHP District 8 Offices | Existing |
| evacuation coordination | MHP Dispatch Centers | MHP District 8 Offices | Existing |
| resource coordination | MHP Dispatch Centers | MHP District 8 Offices | Existing |
| decision support information | MHP Dispatch Centers | MHP Emergency Vehicles | Existing |
| emergency dispatch requests | MHP Dispatch Centers | MHP Emergency Vehicles | Existing |
| suggested route | MHP Dispatch Centers | MHP Emergency Vehicles | Planned |
| alert notification coordination | MHP Dispatch Centers | Mississippi Bureau of Investigations | Existing |
| emergency plan coordination | MHP Dispatch Centers | Mississippi Department of Environmental Quality | Existing |
| incident report | MHP Dispatch Centers | Mississippi Department of Environmental Quality | Existing |
| incident response coordination | MHP Dispatch Centers | Mississippi Department of Environmental Quality | Existing |
| alert notification coordination | MHP Dispatch Centers | Mississippi Emergency Management Agency | Existing |
| emergency plan coordination | MHP Dispatch Centers | Mississippi Emergency Management Agency | Existing |
| evacuation coordination | MHP Dispatch Centers | Mississippi Emergency Management Agency | Existing |
| alert notification coordination | MHP Dispatch Centers | Mississippi Office of Homeland Security | Existing |
| emergency plan coordination | MHP Dispatch Centers | Mississippi Office of Homeland Security | Existing |
| evacuation coordination | MHP Dispatch Centers | Mississippi Office of Homeland Security | Existing |
| emergency plan coordination | MHP Dispatch Centers | Neighboring State Highway Patrol Dispatch Centers | Existing |
| evacuation coordination | MHP Dispatch Centers | Neighboring State Highway Patrol Dispatch Centers | Existing |
| incident command information coordination | MHP Dispatch Centers | Neighboring State Highway Patrol Dispatch Centers | Existing |
| incident report | MHP Dispatch Centers | Neighboring State Highway Patrol Dispatch Centers | Existing |
| incident response coordination | MHP Dispatch Centers | Neighboring State Highway Patrol Dispatch Centers | Existing |
| resource coordination | MHP Dispatch Centers | Neighboring State Highway Patrol Dispatch Centers | Existing |

| Architecture Flow Name | Source | Destination | Status |
|---|---|---|---|
| event confirmation | MHP District 8 Offices | Event Promoters and Traffic Generators | Existing |
| emergency archive data | MHP District 8 Offices | MDOT Accident Database | Existing |
| information on violators | MHP District 8 Offices | MDOT CVISN Credentialing Infrastructure System | Existing |
| information on violators | MHP District 8 Offices | MDOT District 6 PrePass System | Existing |
| emergency plan coordination | MHP District 8 Offices | MDOT District 6 TOC | Existing |
| emergency plan coordination | MHP District 8 Offices | MHP Dispatch Centers | Existing |
| evacuation coordination | MHP District 8 Offices | MHP Dispatch Centers | Existing |
| resource coordination | MHP District 8 Offices | MHP Dispatch Centers | Existing |
| alert notification coordination | MHP District 8 Offices | Mississippi Bureau of Investigations | Existing |
| alert notification coordination | MHP District 8 Offices | Mississippi Emergency Management Agency | Existing |
| emergency plan coordination | MHP District 8 Offices | Mississippi Emergency Management Agency | Existing |
| evacuation coordination | MHP District 8 Offices | Mississippi Emergency Management Agency | Existing |
| alert notification coordination | MHP District 8 Offices | Mississippi Office of Homeland Security | Existing |
| emergency plan coordination | MHP District 8 Offices | Mississippi Office of Homeland Security | Existing |
| evacuation coordination | MHP District 8 Offices | Mississippi Office of Homeland Security | Existing |
| local signal preemption request | MHP Emergency Vehicles | MDOT District 6 Traffic Signal Systems | Planned |
| emergency dispatch response | MHP Emergency Vehicles | MHP Dispatch Centers | Existing |
| emergency vehicle tracking data | MHP Emergency Vehicles | MHP Dispatch Centers | Planned |
| incident status | MHP Emergency Vehicles | MHP Dispatch Centers | Existing |
| alert notification coordination | Mississippi Bureau of Investigations | City/County 911 Dispatch Centers | Existing |
| alert notification coordination | Mississippi Bureau of Investigations | County Emergency Operations Centers | Existing |
| alert notification | Mississippi Bureau of Investigations | MDOT District 6 TOC | Planned |
| alert notification | Mississippi Bureau of Investigations | MDOT Traveler Information Repository | Planned |
| incident information for media | Mississippi Bureau of Investigations | Media | Existing |
| alert notification coordination | Mississippi Bureau of Investigations | MEMA Emergency Operations Center | Existing |
| alert notification coordination | Mississippi Bureau of Investigations | MHP Dispatch Centers | Existing |
| alert notification coordination | Mississippi Bureau of Investigations | MHP District 8 Offices | Existing |
| alert notification coordination | Mississippi Bureau of Investigations | Mississippi Emergency Management Agency | Existing |

| Architecture Flow Name | Source | Destination | Status |
|---|---|---|---|
| alert notification coordination | Mississippi Bureau of Investigations | Mississippi Office of Homeland Security | Existing |
| emergency plan coordination | Mississippi Department of Environmental Quality | City/County 911 Dispatch Centers | Existing |
| incident report | Mississippi Department of Environmental Quality | City/County 911 Dispatch Centers | Existing |
| incident response coordination | Mississippi Department of Environmental Quality | City/County 911 Dispatch Centers | Existing |
| alert notification coordination | Mississippi Department of Environmental Quality | County Emergency Operations Centers | Existing |
| emergency plan coordination | Mississippi Department of Environmental Quality | County Emergency Operations Centers | Existing |
| incident report | Mississippi Department of Environmental Quality | County Emergency Operations Centers | Existing |
| incident response coordination | Mississippi Department of Environmental Quality | County Emergency Operations Centers | Existing |
| alert notification coordination | Mississippi Department of Environmental Quality | MEMA Emergency Operations Center | Existing |
| emergency plan coordination | Mississippi Department of Environmental Quality | MEMA Emergency Operations Center | Existing |
| emergency plan coordination | Mississippi Department of Environmental Quality | MHP Dispatch Centers | Existing |
| incident report | Mississippi Department of Environmental Quality | MHP Dispatch Centers | Existing |
| incident response coordination | Mississippi Department of Environmental Quality | MHP Dispatch Centers | Existing |
| alert notification coordination | Mississippi Department of Environmental Quality | Mississippi Emergency Management Agency | Existing |
| emergency plan coordination | Mississippi Department of Environmental Quality | Mississippi Emergency Management Agency | Existing |
| alert notification coordination | Mississippi Department of Environmental Quality | Mississippi Office of Homeland Security | Existing |
| emergency plan coordination | Mississippi Department of Environmental Quality | Mississippi Office of Homeland Security | Existing |
| hazmat information request | Mississippi Department of Environmental Quality | Private Trucking Companies | Planned |
| alert notification | Mississippi Emergency Management Agency | Biloxi and Gulfport Multimodal Transit Centers | Planned |
| emergency plan coordination | Mississippi Emergency Management Agency | Biloxi and Gulfport Multimodal Transit Centers | Planned |
| evacuation information | Mississippi Emergency Management Agency Biloxi and Gulfport Multimodal Transit Centers | | Planned |
| alert notification coordination | Mississippi Emergency Management Agency | City/County 911 Dispatch Centers | Existing |
| emergency plan coordination | Mississippi Emergency Management Agency | City/County 911 Dispatch Centers | Existing |
| evacuation coordination | Mississippi Emergency Management Agency | City/County 911 Dispatch Centers | Existing |
| alert notification | Mississippi Emergency Management Agency | Coast Transit Authority | Existing |

| Architecture Flow Name | Source | Destination | Status |
|---|---|---|---|
| emergency plan coordination | Mississippi Emergency Management Agency | Coast Transit Authority | Existing |
| evacuation information | Mississippi Emergency Management Agency | Coast Transit Authority | Existing |
| alert notification coordination | Mississippi Emergency Management Agency | County Emergency Operations Centers | Existing |
| emergency plan coordination | Mississippi Emergency Management Agency | County Emergency Operations Centers | Existing |
| evacuation coordination | Mississippi Emergency Management Agency | County Emergency Operations Centers | Existing |
| alert notification coordination | Mississippi Emergency Management Agency | Gulfport-Biloxi International Airport Operations Center | Existing |
| emergency plan coordination | Mississippi Emergency Management Agency | Gulfport-Biloxi International Airport Operations Center | Existing |
| evacuation coordination | Mississippi Emergency Management Agency | Gulfport-Biloxi International Airport Operations Center | Existing |
| alert notification | Mississippi Emergency Management Agency | MDOT District 6 Maintenance and Construction Offices | Existing |
| emergency plan coordination | Mississippi Emergency Management Agency | MDOT District 6 Maintenance and Construction Offices | Existing |
| evacuation information | Mississippi Emergency Management Agency | MDOT District 6 Maintenance and Construction Offices | Existing |
| alert notification | Mississippi Emergency Management Agency | MDOT District 6 TOC | Existing |
| emergency plan coordination | Mississippi Emergency Management Agency | MDOT District 6 TOC | Existing |
| evacuation information | Mississippi Emergency Management Agency | MDOT District 6 TOC | Existing |
| alert notification | Mississippi Emergency Management Agency | MDOT Statewide 511 System | Planned |
| alert notification | Mississippi Emergency Management Agency | MDOT Traveler Information Repository | Planned |
| evacuation information | Mississippi Emergency Management Agency | MDOT Traveler Information Repository | Planned |
| incident information for media | Mississippi Emergency Management Agency | Media | Existing |
| alert notification coordination | Mississippi Emergency Management Agency | MEMA Emergency Operations Center | Existing |
| emergency plan coordination | Mississippi Emergency Management Agency | MEMA Emergency Operations Center | Existing |
| evacuation coordination | Mississippi Emergency Management Agency | MEMA Emergency Operations Center | Existing |
| alert notification coordination | Mississippi Emergency Management Agency | MHP Dispatch Centers | Existing |
| emergency plan coordination | Mississippi Emergency Management Agency | MHP Dispatch Centers | Existing |
| evacuation coordination | Mississippi Emergency Management Agency | MHP Dispatch Centers | Existing |
| alert notification coordination | Mississippi Emergency Management Agency | MHP District 8 Offices | Existing |
| emergency plan coordination | Mississippi Emergency Management Agency | MHP District 8 Offices | Existing |

| Architecture Flow Name | Source | Destination | Status |
|---|---|---|---|
| evacuation coordination | Mississippi Emergency Management Agency | MHP District 8 Offices | Existing |
| alert notification coordination | Mississippi Emergency Management Agency | Mississippi Bureau of Investigations | Existing |
| alert notification coordination | Mississippi Emergency Management Agency | Mississippi Department of Environmental Quality | Existing |
| emergency plan coordination | Mississippi Emergency Management Agency | Mississippi Department of Environmental Quality | Existing |
| alert notification coordination | Mississippi Emergency Management Agency | Mississippi Office of Homeland Security | Existing |
| emergency plan coordination | Mississippi Emergency Management Agency | Mississippi Office of Homeland Security | Existing |
| evacuation coordination | Mississippi Emergency Management Agency | Mississippi Office of Homeland Security | Existing |
| alert notification coordination | Mississippi Emergency Management Agency | Neighboring State Emergency Management Centers | Existing |
| emergency plan coordination | Mississippi Emergency Management Agency | Neighboring State Emergency Management Centers | Existing |
| evacuation coordination | Mississippi Emergency Management Agency | Neighboring State Emergency Management Centers | Existing |
| emergency traveler information | Mississippi Emergency Management Agency | User Personal Computing Devices | Existing |
| alert notification | Mississippi Office of Homeland Security | Biloxi and Gulfport Multimodal Transit Centers | Planned |
| emergency plan coordination | Mississippi Office of Homeland Security | Biloxi and Gulfport Multimodal Transit Centers | Planned |
| alert notification coordination | Mississippi Office of Homeland Security | City/County 911 Dispatch Centers | Existing |
| emergency plan coordination | Mississippi Office of Homeland Security | City/County 911 Dispatch Centers | Existing |
| evacuation coordination | Mississippi Office of Homeland Security | City/County 911 Dispatch Centers | Existing |
| alert notification | Mississippi Office of Homeland Security | Coast Transit Authority | Existing |
| emergency plan coordination | Mississippi Office of Homeland Security | Coast Transit Authority | Existing |
| evacuation information | Mississippi Office of Homeland Security | Coast Transit Authority | Existing |
| alert notification coordination | Mississippi Office of Homeland Security | County Emergency Operations Centers | Existing |
| emergency plan coordination | Mississippi Office of Homeland Security | County Emergency Operations Centers | Existing |
| evacuation coordination | Mississippi Office of Homeland Security | County Emergency Operations Centers | Existing |
| alert notification coordination | Mississippi Office of Homeland Security | Gulfport-Biloxi International Airport Operations Center | Existing |
| emergency plan coordination | Mississippi Office of Homeland Security | Gulfport-Biloxi International Airport Operations Center | Existing |
| evacuation coordination | Mississippi Office of Homeland Security | Gulfport-Biloxi International Airport Operations Center | Existing |
| threat information coordination | Mississippi Office of Homeland Security | Gulfport-Biloxi International Airport Operations Center | Planned |

| Architecture Flow Name | Source | Destination | Status |
|---|---|---|---|
| alert notification | Mississippi Office of Homeland Security | MDOT District 6 Maintenance and Construction Offices | Existing |
| emergency plan coordination | Mississippi Office of Homeland Security | MDOT District 6 Maintenance and Construction Offices | Existing |
| evacuation information | Mississippi Office of Homeland Security | MDOT District 6 Maintenance and Construction Offices | Existing |
| alert notification | Mississippi Office of Homeland Security | MDOT District 6 TOC | Existing |
| emergency plan coordination | Mississippi Office of Homeland Security | MDOT District 6 TOC | Existing |
| evacuation information | Mississippi Office of Homeland Security | MDOT District 6 TOC | Existing |
| alert notification | Mississippi Office of Homeland Security | MDOT Statewide 511 System | Planned |
| alert notification | Mississippi Office of Homeland Security | MDOT Traveler Information Repository | Planned |
| incident information for media | Mississippi Office of Homeland Security | Media | Existing |
| alert notification coordination | Mississippi Office of Homeland Security | MEMA Emergency Operations Center | Existing |
| emergency plan coordination | Mississippi Office of Homeland Security | MEMA Emergency Operations Center | Existing |
| evacuation coordination | Mississippi Office of Homeland Security | MEMA Emergency Operations Center | Existing |
| alert notification coordination | Mississippi Office of Homeland Security | MHP Dispatch Centers | Existing |
| emergency plan coordination | Mississippi Office of Homeland Security | MHP Dispatch Centers | Existing |
| evacuation coordination | Mississippi Office of Homeland Security | MHP Dispatch Centers | Existing |
| alert notification coordination | Mississippi Office of Homeland Security | MHP District 8 Offices | Existing |
| emergency plan coordination | Mississippi Office of Homeland Security | MHP District 8 Offices | Existing |
| evacuation coordination | Mississippi Office of Homeland Security | MHP District 8 Offices | Existing |
| alert notification coordination | Mississippi Office of Homeland Security | Mississippi Bureau of Investigations | Existing |
| alert notification coordination | Mississippi Office of Homeland Security | Mississippi Department of Environmental Quality | Existing |
| emergency plan coordination | Mississippi Office of Homeland Security | Mississippi Department of Environmental Quality | Existing |
| alert notification coordination | Mississippi Office of Homeland Security | Mississippi Emergency Management Agency | Existing |
| emergency plan coordination | Mississippi Office of Homeland Security | Mississippi Emergency Management Agency | Existing |
| evacuation coordination | Mississippi Office of Homeland Security | Mississippi Emergency Management Agency | Existing |
| emergency traveler information | Mississippi Office of Homeland Security | User Personal Computing Devices | Existing |
| commercial vehicle archive data | Mississippi Public Service Commission SAFETYNET | MDOT CVISN Credentialing Infrastructure System | Existing |

| Architecture Flow Name | Source | Destination | Status |
|---|---|---|---|
| credential fee coordination | Mississippi Public Service Commission SAFETYNET | MDOT CVISN Credentialing Infrastructure System | Existing |
| credentials information | Mississippi Public Service Commission SAFETYNET | MDOT CVISN Credentialing Infrastructure System | Existing |
| credentials status information | Mississippi Public Service Commission SAFETYNET | MDOT CVISN Credentialing Infrastructure System | Existing |
| compliance review report | Mississippi Public Service Commission SAFETYNET | Private Trucking Companies | Existing |
| credentials information | Mississippi Public Service Commission SAFETYNET | Private Trucking Companies | Existing |
| credentials status information | Mississippi Public Service Commission SAFETYNET | Private Trucking Companies | Existing |
| broadcast information | Mississippi Road/Weather Conditions Website | User Personal Computing Devices | Existing |
| commercial vehicle archive data | Mississippi State Tax Commission Commercial Vehicle Databases | MDOT CVISN Credentialing Infrastructure System | Existing |
| credential fee coordination | Mississippi State Tax Commission Commercial Vehicle Databases | MDOT CVISN Credentialing Infrastructure System | Existing |
| credentials information | Mississippi State Tax Commission Commercial Vehicle Databases | MDOT CVISN Credentialing Infrastructure System | Existing |
| credentials status information | Mississippi State Tax Commission Commercial Vehicle Databases | MDOT CVISN Credentialing Infrastructure System | Existing |
| compliance review report | Mississippi State Tax Commission Commercial Vehicle Databases | Private Trucking Companies | Existing |
| credentials information | Mississippi State Tax Commission Commercial Vehicle Databases | Private Trucking Companies | Existing |
| credentials status information | Mississippi State Tax Commission Commercial Vehicle Databases | Private Trucking Companies | Existing |
| alert notification coordination | Neighboring State Emergency Management Centers | MEMA Emergency Operations Center | Existing |
| emergency plan coordination | Neighboring State Emergency Management Centers | MEMA Emergency Operations Center | Existing |
| evacuation coordination | Neighboring State Emergency Management Centers | MEMA Emergency Operations Center | Existing |
| incident command information coordination | Neighboring State Emergency Management Centers | MEMA Emergency Operations Center | Existing |
| incident report | Neighboring State Emergency Management Centers | MEMA Emergency Operations Center | Existing |
| incident response coordination | Neighboring State Emergency Management Centers | MEMA Emergency Operations Center | Existing |
| resource coordination | Neighboring State Emergency Management Centers | MEMA Emergency Operations Center | Existing |
| threat information coordination | Neighboring State Emergency Management Centers | MEMA Emergency Operations Center | Planned |
| alert notification coordination | Neighboring State Emergency Management Centers | Mississippi Emergency Management Agency | Existing |
| emergency plan coordination | Neighboring State Emergency Management Centers | Mississippi Emergency Management Agency | Existing |
| evacuation coordination | Neighboring State Emergency Management Centers | Mississippi Emergency Management Agency | Existing |

| Architecture Flow Name | Source | Destination | Status |
|---|---|---|---|
| emergency plan coordination | Neighboring State Highway Patrol Dispatch Centers | MHP Dispatch Centers | Existing |
| evacuation coordination | Neighboring State Highway Patrol Dispatch Centers | MHP Dispatch Centers | Existing |
| incident command information coordination | Neighboring State Highway Patrol Dispatch Centers | MHP Dispatch Centers | Existing |
| incident report | Neighboring State Highway Patrol Dispatch Centers | MHP Dispatch Centers | Existing |
| incident response coordination | Neighboring State Highway Patrol Dispatch Centers | MHP Dispatch Centers | Existing |
| resource coordination | Neighboring State Highway Patrol Dispatch Centers | MHP Dispatch Centers | Existing |
| transit fare coordination | Other Transit Service Providers | Biloxi and Gulfport Multimodal Transit Centers | Planned |
| transit service coordination | Other Transit Service Providers | Biloxi and Gulfport Multimodal Transit Centers | Planned |
| transit traveler information coordination | Other Transit Service Providers | Biloxi and Gulfport Multimodal Transit Centers | Planned |
| transit fare coordination | Other Transit Service Providers | Coast Transit Authority | Planned |
| transit service coordination | Other Transit Service Providers | Coast Transit Authority | Planned |
| transit traveler information coordination | Other Transit Service Providers | Coast Transit Authority | Planned |
| electronic screening request | Port Authority Facilities | Private Trucking Companies Commercial Vehicles | Existing |
| pass/pull-in | Port Authority Facilities | Private Trucking Companies Commercial Vehicles | Existing |
| request tag data | Port Authority Facilities | Private Trucking Companies Commercial Vehicles | Existing |
| screening event record | Port Authority Facilities | Private Trucking Companies Commercial Vehicles | Existing |
| audit data | Private Trucking Companies | MDOT CVISN Credentialing Infrastructure System | Existing |
| credential application | Private Trucking Companies | MDOT CVISN Credentialing Infrastructure System | Existing |
| tax filing | Private Trucking Companies | MDOT CVISN Credentialing Infrastructure System | Existing |
| audit data | Private Trucking Companies | MDOT ExpressPass Permitting System | Existing |
| credential application | Private Trucking Companies | MDOT ExpressPass Permitting System | Existing |
| hazmat information | Private Trucking Companies | Mississippi Department of Environmental Quality | Planned |
| audit data | Private Trucking Companies | Mississippi Public Service Commission SAFETYNET | Existing |
| credential application | Private Trucking Companies | Mississippi Public Service Commission SAFETYNET | Existing |
| audit data | Private Trucking Companies | Mississippi State Tax Commission Commercial Vehicle Databases | Existing |

| Architecture Flow Name | Source | Destination | Status |
|---|---|---|---|
| credential application | Private Trucking Companies | Mississippi State Tax Commission Commercial Vehicle Databases | Existing |
| tax filing | Private Trucking Companies | Mississippi State Tax Commission Commercial Vehicle Databases | Existing |
| safety inspection record | Private Trucking Companies Commercial Vehicles | MDOT District 6 PrePass System | Existing |
| screening event record | Private Trucking Companies Commercial Vehicles | MDOT District 6 PrePass System | Existing |
| safety inspection record | Private Trucking Companies Commercial Vehicles | MDOT District 6 Weigh-in-Motion Stations | Existing |
| screening event record | Private Trucking Companies Commercial Vehicles | MDOT District 6 Weigh-in-Motion Stations | Existing |
| tag data | Private Trucking Companies Commercial Vehicles | MDOT District 6 Weigh-in-Motion Stations | Existing |
| hazmat spill notification | Private Trucking Companies Commercial Vehicles | Mississippi Department of Environmental Quality | Planned |
| CVO weight and presence | Private Trucking Companies Commercial Vehicles | Port Authority Facilities | Existing |
| identification information | Private Trucking Companies Commercial Vehicles | Port Authority Facilities | Existing |
| screening event record | Private Trucking Companies Commercial Vehicles | Port Authority Facilities | Existing |
| tag data | Private Trucking Companies Commercial Vehicles | Port Authority Facilities | Existing |
| railroad schedules | Rail Companies | City of Biloxi Public Works | Planned |
| work plan feedback | Rail Companies | City of Biloxi Public Works | Planned |
| railroad schedules | Rail Companies | City of Gulfport Public Works | Planned |
| work plan feedback | Rail Companies | City of Gulfport Public Works | Planned |
| railroad schedules | Rail Companies | City of Pascagoula Public Works | Planned |
| work plan feedback | Rail Companies | City of Pascagoula Public Works | Planned |
| railroad schedules | Rail Companies | Local City/County Public Works | Planned |
| work plan feedback | Rail Companies | Local City/County Public Works | Planned |
| railroad advisories | Rail Companies | Local City/County TOCs | Planned |
| railroad schedules | Rail Companies | Local City/County TOCs | Planned |
| railroad schedules | Rail Companies | MDOT District 6 Maintenance and Construction Offices | Planned |
| work plan feedback | Rail Companies | MDOT District 6 Maintenance and Construction Offices | Planned |
| railroad advisories | Rail Companies | MDOT District 6 TOC | Planned |
| track status | Railroad Wayside Equipment | City of Biloxi TOC Roadside Equipment | Existing |
| track status | Railroad Wayside Equipment | City of Gulfport TOC Roadside Equipment | Existing |
| track status | Railroad Wayside Equipment | Local City/County TOCs Roadside Equipment | Planned |
| arriving train information | Railroad Wayside Equipment | MDOT District 6 Railroad Crossing Control | Planned |
| track status | Railroad Wayside Equipment | MDOT District 6 Railroad Crossing Control | Planned |
| track status | Railroad Wayside Equipment | MDOT District 6 Traffic Signal Systems | Existing |

| Architecture Flow Name | Source | Destination | Status |
|---|---|---|---|
| driver parking information | Smart Parking Systems | Driver | Planned |
| voice-based traveler request | Telecommunications System for Traveler Information | MDOT Statewide 511 System | Planned |
| emergency traveler information request | User Personal Computing Devices | Biloxi and Gulfport Multimodal Transit Centers | Planned |
| transit information user request | User Personal Computing Devices | Biloxi and Gulfport Multimodal Transit Centers | Planned |
| emergency traveler information request | User Personal Computing Devices | County Emergency Operations Centers | Existing |
| emergency traveler information request | User Personal Computing Devices | Gulfport-Biloxi International Airport Information System | Existing |
| emergency traveler information request | User Personal Computing Devices | MDOT MSTraffic.com | Planned |
| emergency traveler information request | User Personal Computing Devices | Mississippi Emergency Management Agency | Existing |
| emergency traveler information request | User Personal Computing Devices | Mississippi Office of Homeland Security | Existing |
| alerts and advisories | Weather Service | City of Pascagoula Public Works | Existing |
| weather information | Weather Service | City of Pascagoula Public Works | Existing |
| alerts and advisories | Weather Service | City of Pascagoula TOC | Existing |
| weather information | Weather Service | City of Pascagoula TOC | Existing |
| alerts and advisories | Weather Service | City/County 911 Dispatch Centers | Existing |
| weather information | Weather Service | City/County 911 Dispatch Centers | Existing |
| alerts and advisories | Weather Service | County Emergency Operations Centers | Existing |
| weather information | Weather Service | County Emergency Operations Centers | Existing |
| alerts and advisories | Weather Service | Gulfport-Biloxi International Airport Operations Center | Existing |
| weather information | Weather Service | Gulfport-Biloxi International Airport Operations Center | Existing |
| alerts and advisories | Weather Service | MDOT District 6 Maintenance and Construction Offices | Existing |
| weather information | Weather Service | MDOT District 6 Maintenance and Construction Offices | Existing |
| alerts and advisories | Weather Service | MDOT District 6 TOC | Existing |
| weather information | Weather Service | MDOT District 6 TOC | Existing |
| weather information | Weather Service | MDOT Statewide 511 System | Planned |
| weather information | Weather Service | MDOT Traveler Information Repository | Planned |
| alerts and advisories | Weather Service | MEMA Emergency Operations Center | Existing |
| weather information | Weather Service | MEMA Emergency Operations Center | Existing |
| alerts and advisories | Weather Service | MHP Dispatch Centers | Existing |
| weather information | Weather Service | MHP Dispatch Centers | Existing |
| alerts and advisories | Weather Service | Mississippi Emergency Management Agency | Existing |
| weather information | Weather Service | Mississippi Emergency Management Agency | Existing |