SECTION 905 -- PROPOSAL (CONTINUED)

I (We) hereby certify by digital signature and electronic submission via Bid Express of the Section 905 proposal below, that all certifications, disclosures and affidavits incorporated herein are deemed to be duly executed in the aggregate, fully enforceable and binding upon delivery of the bid proposal. I (We) further acknowledge that this certification shall not extend to the bid bond or alternate security which must be separately executed for the benefit of the Commission. This signature does not cure deficiencies in any required certifications, disclosures and/or affidavits. I (We) also acknowledge the right of the Commission to require full and final execution on any certification, disclosure or affidavit contained in the proposal at the Commission's election upon award. Failure to so execute at the Commission's request within the time allowed in the Standard Specifications for execution of all contract documents will result in forfeiture of the bid bond or alternate security.

Bidder acknowledges receipt of and has added to and made a part of the proposal and contract documents the following addendum (addenda):

ADDENDUM NO.	1	DATED	7/16/2025	ADDENDUM NO.		DATED	
ADDENDUM NO	2	DATED	7/25/2025	ADDENDUM NO.		DATED	
ADDENDUM NO		DATED		ADDENDUM NO.		DATED	

Number	Description
1	Postponed til July 31, 2025 Letting; Amendment EBSx Download Required.
2	Revised Table of Contents; Revised NTB Nos. 6987 & 6988; Added NTB No. 6990; SP 907-626-12 replaces SP 907-626-11; SP 907-720-4 replaces SP 907-720-3; Revised Bid Items; Revised or Added Plan Sheet Nos. 2, 11-13, 23-27, 28.1, 28.2, 40, 2001-2006; Amendment EBSx Download Required.

TOTAL ADDENDA: 2
(Must agree with total addenda issued prior to opening of bids)

Respectfully Submitted,

DATE _____

_____
Contractor

BY _____
Signature

TITLE _____

ADDRESS _____

CITY, STATE, ZIP _____

PHONE _____

FAX _____

E-MAIL _____

(To be filled in if a corporation)

Our corporation is chartered under the Laws of the State of _____ and the names, titles and business addresses of the executives are as follows:

_____
President Address

_____
Secretary Address

_____
Treasurer Address

The following is my (our) itemized proposal.

HSIP-0064-01(038)/108634301000, NHPP-0064-01(038)/ 108634301100 & NHPP-0064-01(038)/ 108634301200
Harrison County(ies)

Revised 01/26/2016

For Informational Purposes Only

MISSISSIPPI DEPARTMENT OF TRANSPORTATION
TABLE OF CONTENTS

PROJECT: HSIP-0064-01(038)/108634301 - Harrison
NHPP-0064-01(038)/108634301 - Harrison
NHPP-0064-01(038)/108634301 - Harrison

Section 901 - Advertisement

Section 904 - Notice to Bidders

#1	Governing Specification, w/ Supplement
#2	Status of ROW, w/ Attachments
#15	Non-Use of Precast Drainage Units
#296	Reduced Speed Limit Signs
#445	Mississippi Agent or Qualified Nonresident Agent
#447	Traffic on Milled Surface in Rural Areas
#516	Errata and Modifications to the 2017 Standard Specifications
#757	Additional Erosion Control Requirements
#1225	Early Notice to Proceed
#1226	Material Storage Under Bridges
#1241	Fuel and Material Adjustments
#1434	Erosion Control Plan
#1963	Guardrail Pads
#2172	App for Storm Water Reports
#2206	MASH Compliant Devices
#2273	Mississippi Special Fuel Tax Law
#2812	Traffic Signal and ITS Components
#2954	Reflective Sheeting for Signs
#3676	Asphalt Gyratory Compactor Internal Angle Calibration
#3875	General ITS Requirements
#4113	Unique Entity ID Requirement For Federal Funded Projects
#4638	Storm Water Discharge Associated with Construction Activity (> 5 Acres)
#4702	App for Traffic Control Report
#5086	Detail of Square Tube Sign Posts
#5551	Federal Bridge Formula
#5605	Disadvantaged Business Enterprise In Federal-Aid Highway Construction, w/ Supplement
#5750	Manual on Uniform Traffic Control Devices (MUTCD)
#6195	Retroreflectivity Requirements
#6986	Contract Time
#6987	Specialty Items
#6988	Scope of Work
#6989	Removal of Obstruction
#6990	Plan Corrections
#7077	DBE Pre-Bid Meeting

906 Required Federal Contract Provisions -- FHWA 1273, w/Supplements

Section 907 - Special Provisions

907-101-1 Definitions and Terms

PROJECT: HSIP-0064-01(038)/108634301 - Harrison
NHPP-0064-01(038)/108634301 - Harrison
NHPP-0064-01(038)/108634301 - Harrison

907-102-2	Bidding Requirements and Conditions
907-104-2	Minor Alterations to the Contract
907-105-2	Control of Work
907-106-3	Control of Materials
907-107-2	Contractor's Erosion Control Plan
907-108-4	Subletting of Contract
907-108-6	Default and Termination of Contract
907-109-5	Measurement and Payment
907-234-1	Silt Fence
907-401-2	Asphalt Pavements - General
907-403-4	Asphalt Pavements
907-413-2	Cleaning and Sealing Joints and Cracks
907-420-4	Undersealing
907-618-11	Work Zone Law Enforcement
907-618-12	Traffic Control Management
907-619-5	Traffic Control for Construction Zones
907-626-12	Thermoplastic Traffic Markiings
907-627-1	Raised Pavement Markings
907-628-6	Cold Plastic Pavement Markings
907-631-1	Traffic Signal Systems - General, w/Supplement
907-632-1	Traffic Signal Cabinet Assemblies
907-634-4	Traffic Signal and ITS Equipment Poles
907-636-3	Electrical Cable
907-637-3	Traffic Signal Conduit and Pull Boxes
907-641-4	Radar Vehicle Detection
907-650-5	On-Street Video Equipment
907-653-1	Traffic and Street Name Signs
907-659-5	Traffic Management Center (TMC) Modifications
907-662-2	Radio Interconnect System
907-663-6	Networking Equipment
907-672-1	Remove and Reset Traffic Signal and ITS Equipment
907-700-1	Materials and Tests
907-701-4	Hydraulic Cement, w/ Supplement
907-702-4	Bituminous Materials
907-703-2	Gradation
907-705-1	Stone Riprap
907-707-3	Joint Materials
907-708-4	Concrete Pipe
907-711-2	Plain Steel Wire
907-712-1	Fence and Guardrail
907-714-3	Miscellaneous Materials
907-718-1	Timber and Dimension Lumber
907-720-4	Pavement Marking Materials
907-721-4	Materials for Signing
907-722-1	Materials for Traffic Signal Installation
906-9	Training Special Provisions

PROJECT: HSIP-0064-01(038)/108634301 - Harrison
NHPP-0064-01(038)/108634301 - Harrison
NHPP-0064-01(038)/108634301 - Harrison

Section 905 - Proposal, Proposal Bid Items, Combination Bid Proposal
Certification of Performance - Prior Federal-Aid Contracts
Certification Regarding Non-Collusion, Debarment and Suspension
SAM.GOV Registration and Unique Entity ID
Section 902 - Contract Form
Section 903 - Contract Bond Forms
Form -- OCR-485

(REVISIONS TO THE ABOVE WILL BE INDICATED ON THE SECOND SHEET
OF SECTION 905 AS ADDENDA)

07/24/2025 02:00 PM

MISSISSIPPI DEPARTMENT OF TRANSPORTATION

SECTION 904 - NOTICE TO BIDDERS NO. 6987

DATE: 07/24/2025

SUBJECT: Specialty Items

PROJECT: HSIP-0064-01(038)/108634301 & NHPP-0064-01(038)/108634301 & NHPP-0064-01(038)/108634301 - HARRISON

Pursuant to the provisions of Section 108, the following work items are hereby designated as "Specialty Items" for this contract. Bidders are reminded that these items must be subcontracted in order to be considered as specialty items.

CATEGORY: CURBING, SIDEWALKS, GUTTERS

Line No	Pay Item	Description
0700	609-B003	Concrete Curb, Special Design for Slotted Curb
0710	609-D003	Combination Concrete Curb and Gutter Type 2
0720	609-D012	Combination Concrete Curb and Gutter Type 3A Modified

CATEGORY: EROSION CONTROL

Line No	Pay Item	Description
0260	213-C001	Superphosphate
0270	216-A001	Solid Sodding
0280	217-A001	Ditch Liner
0290	219-A001	Watering
0300	220-A001	Insect Pest Control
0310	221-A001	Concrete Paved Ditch
0320	223-A001	Mowing
0330	225-A001	Grassing
0340	225-B001	Agricultural Limestone
0350	225-C001	Mulch, Vegetative Mulch
0360	226-A001	Temporary Grassing
0370	229-A001	Erosion Mat
0380	237-A002	Wattles, 20"
0390	246-B001	Rockbags
0400	249-A001	Riprap for Erosion Control
1160	907-234-A001	Temporary Silt Fence
1170	907-234-D001	Inlet Siltation Guard
1180	907-234-E001	Reset Inlet Siltation Guard

CATEGORY: GUARDRAIL, GUIDERAIL

Line No	Pay Item	Description
0670	606-B003	Guard Rail, Class A, Type 1, 'W' Beam, Metal Post
0680	606-D001	Guard Rail, Bridge End Section
0690	606-E001	Guard Rail, Terminal End Section

CATEGORY: INTELLIGENT TRANSPORTATION SYSTEMS

Line No	Pay Item	Description
1910	907-659-A001	Traffic Management Center Modifications

CATEGORY: LIGHTING, ALUMINUM TRUSSED ARM

Line No	Pay Item	Description
1050	682-A039	Underground Branch Circuit, AWG 8, 3 Conductor
1060	682-D003	Underground Pull Box
1070	682-E002	Underground Junction Box
1080	682-F001	Secondary Power Controller
1090	683-B005	Lighting Assembly, Low Mast, LED, Type 40-1-8-213
1100	684-A003	Pole Foundation, 24" Diameter
1110	685-D001	Service Pole

CATEGORY: MISCELLANEOUS/ SPECIALTY WORK ITEMS

Line No	Pay Item	Description
0430	423-A001	Rumble Strips, Ground In

CATEGORY: PAVEMENT STRIPING AND MARKING

Line No	Pay Item	Description
1310	907-626-A007	6" Thermoplastic Double Drop Traffic Stripe, Skip White
1320	907-626-C012	6" Thermoplastic Double Drop Edge Stripe, Continuous White
1330	907-626-C011	6" Thermoplastic Double Drop Edge Stripe, Continuous White
1340	907-626-F003	6" Thermoplastic Double Drop Edge Stripe, Continuous Yellow
1350	907-626-E004	6" Thermoplastic Double Drop Traffic Stripe, Continuous Yellow
1380	907-626-G006	Thermoplastic Double Drop Detail Stripe, White
1390	907-626-G007	Thermoplastic Double Drop Detail Stripe, Yellow
1400	907-626-H006	Thermoplastic Double Drop Legend, White
1410	907-626-H007	Thermoplastic Double Drop Legend, White
1440	907-627-J001	Two-Way Clear Reflective High Performance Raised Markers
1450	907-627-K001	Red-Clear Reflective High Performance Raised Markers
1460	907-627-L001	Two-Way Yellow Reflective High Performance Raised Markers
1470	907-627-M001	One-Way Clear Reflective High Performance Raised Markers
1480	907-627-N001	One-Way Yellow Reflective High Performance Raised Markers
1490	907-628-G003	6" High Performance Cold Plastic Traffic Stripe, Skip White
1500	907-628-H005	6" High Performance Cold Plastic Traffic Stripe, Continuous White
1510	907-628-J003	6" High Performance Cold Plastic Traffic Stripe, Continuous Yellow

CATEGORY: SURVEY AND STAKING

Line No	Pay Item	Description
1120	699-A001	Roadway Construction Stakes

CATEGORY: TRAFFIC CONTROL - PERMANENT

Line No	Pay Item	Description
0890	629-A005	Vehicular Impact Attenuator, 70 MPH
0900	630-A001	Standard Roadside Signs, Sheet Aluminum, 0.080" Thickness
0910	630-A003	Standard Roadside Signs, Sheet Aluminum, 0.125" Thickness
0920	630-C001	Square Tube Posts, 4.0 lb/ft
0930	630-C005	Square Tube Posts, 2.0 lb/ft
0940	630-E005	Structural Steel Angles & Bars, Aluminum Unistrut
0950	630-F006	Delineators, Guard Rail, White
0960	630-F007	Delineators, Guard Rail, Yellow

0970	630-G005	Type 3 Object Markers, OM-3R or OM-3L, Post Mounted
0980	635-A059	Traffic Signal Head, Type 1
0990	635-A060	Traffic Signal Head, Type 1A
1000	635-A061	Traffic Signal Head, Type 2
1010	635-A063	Traffic Signal Head, Type 2R
1020	635-A069	Traffic Signal Head, Type 2U
1030	638-A003	Flashing Assembly, Be Prepared to Stop When Flashing
1040	647-A001	Removal of Existing Traffic Signal Equipment
1520	907-630-PP002	Roadside Directional Signs, Sheet Aluminum, 0.125" Thickness, Ground Mounted
1530	907-632-A007	Solid State Traffic Cabinet Assembly, Type III Cabinet, Type 1 Controller
1540	907-632-J001	Power Service Pedestal
1550	907-634-A041	Traffic Signal Equipment Pole, Type II(L), 30' Shaft, 25' Arm
1560	907-634-A042	Traffic Signal Equipment Pole, Type II(L), 30' Shaft, 30' Arm
1570	907-634-A043	Traffic Signal Equipment Pole, Type II(L), 30' Shaft, 35' Arm
1580	907-634-A044	Traffic Signal Equipment Pole, Type II(L), 30' Shaft, 40' Arm
1590	907-634-A045	Traffic Signal Equipment Pole, Type II(L), 30' Shaft, 45' Arm
1600	907-634-A224	Traffic Signal Equipment Pole, Type III(L), 30' Shaft, 25' & 45' Arm
1610	907-634-A226	Traffic Signal Equipment Pole, Type III(L), 30' Shaft, 25' & 55' Arm
1620	907-634-A227	Traffic Signal Equipment Pole, Type III(L), 30' Shaft, 25' & 60' Arm
1630	907-634-A230	Traffic Signal Equipment Pole, Type III(L), 30' Shaft, 30' & 40' Arm
1640	907-634-A232	Traffic Signal Equipment Pole, Type III(L), 30' Shaft, 30' & 50' Arm
1650	907-634-A254	Traffic Signal Equipment Pole, Type III(L), 30' Shaft, 40' & 40' Arm
1660	907-634-A426	Traffic Signal Equipment Pole, Type III, 30' Shaft, 25' & 55' Arm
1670	907-634-A539	Traffic Signal Equipment Pole, Type V, 10' Shaft
1680	907-634-B001	Traffic Signal Equipment Pole Shaft Extension, 10'
1690	907-634-C002	Pole Foundations, Class "DS" Concrete
1700	907-634-D003	Slip Casing, 36" Diameter
1710	907-636-B003	Electric Cable, Underground in Conduit, IMSA 20-1, AWG 10, 2 Conductor
1720	907-636-B013	Electric Cable, Underground in Conduit, IMSA 20-1, AWG 14, 4 Conductor
1730	907-636-B016	Electric Cable, Underground in Conduit, IMSA 20-1, AWG 14, 8 Conductor
1740	907-636-B028	Electric Cable, Underground in Conduit, IMSA 20-1, AWG 8, 3 Conductor
1750	907-636-B040	Electric Cable, Underground in Conduit, THHN, AWG #12, 3 Conductor
1760	907-637-A002	Pullbox Enclosure, Type 2
1770	907-637-A003	Pullbox Enclosure, Type 3
1780	907-637-C028	Traffic Signal Conduit, Underground, Type 4, 2"
1790	907-637-C030	Traffic Signal Conduit, Underground, Type 4, 3"
1800	907-637-D003	Traffic Signal Conduit, Underground Drilled or Jacked, Rolled Pipe, 3"
1810	907-637-D009	Traffic Signal Conduit, Underground Drilled or Jacked, Type 4, 2"
1820	907-641-A002	Signal Stop Bar Radar Vehicle Detection Sensor, Type 2
1830	907-641-B002	Signal Advanced Radar Vehicle Detection Sensor, Type 2
1840	907-641-D001	Radar Vehicle Detection Cable
1850	907-641-F002	Signal Radar Vehicle Detection Processor, Type 2
1860	907-650-A002	On Street Video Equipment, Fixed Type
1870	907-650-A003	On Street Video Equipment, PTZ Type
1880	907-650-A004	On Street Video Equipment, PTZ Type, Signal Monitoring

1890	907-653-A001	Traffic Sign
1900	907-653-B001	Street Name Sign
1912	907-661-B002	Fiber Optic Drop Cable, 12 SM
1914	907-663-A002	Network Switch, Type B
1920	907-662-D001	Radio Interconnect, Broadband, Long Range
1930	907-662-D002	Radio Interconnect, Broadband, Short Range
1940	907-663-A006	Network Switch, Type F
1950	907-672-A003	Remove and Reset Traffic Signal Equipment

CATEGORY: TRAFFIC CONTROL - TEMPORARY

Line No	Pay Item	Description
0760	619-A1001	Temporary Traffic Stripe, Continuous White
0770	619-A1002	Temporary Traffic Stripe, Continuous White
0780	619-A2001	Temporary Traffic Stripe, Continuous Yellow
0790	619-A2002	Temporary Traffic Stripe, Continuous Yellow
0800	619-A3001	Temporary Traffic Stripe, Skip White
0810	619-A5001	Temporary Traffic Stripe, Detail
0820	619-A6001	Temporary Traffic Stripe, Legend
0830	619-A6002	Temporary Traffic Stripe, Legend
0840	619-D1001	Standard Roadside Construction Signs, Less than 10 Square Feet
0850	619-D2001	Standard Roadside Construction Signs, 10 Square Feet or More
0860	619-G4005	Barricades, Type III, Single Faced
0870	619-G7001	Warning Lights, Type "B"
1300	907-619-E3001	Changeable Message Sign

MISSISSIPPI DEPARTMENT OF TRANSPORTATION

SECTION 904 - NOTICE TO BIDDERS NO. 6988 **CODE: (SP)**

DATE: **07/25/2025**

SUBJECT: **Scope of Work**

PROJECT: **HSIP-0064-01(038) / 108634301, NHPP-0064-01(038) / 108634301100, & NHPP-0064-01(038) / 108634301200 -- Harrison County**

The conditions set forth in this Notice to Bidders are additional provisions that are applicable only to the NHPP-0064-01(038) / 108634301200 portion of this contract. Other work is addressed in the Plans.

Work on the project shall consist of the following:

GENERAL CONDITIONS

(A) Prior to the overlay, centerline alignment shall be determined by the contractor by measuring the existing roadway at 500-foot intervals in tangent sections, and 100-foot intervals in horizontal curves.

(B) A uniform cross slope of ±2% in tangent sections and correction/maintenance of super elevation in the curves is required. Super-elevation rates shall be in accordance with Standard Drawing SDSE-2G.

(C) Temporary stripe along the mainline, as well as temporary detail stop bars of all intersecting local roads shall be placed on the asphalt surface upon the completion of each lift of mainline operations. Temporary and permanent striping shall be placed where existing stripes are located, and shall conform to finished stripe specifications for alignment, neatness, reflectivity, and straightness. All permanent pavement markings on asphalt are to be hot thermoplastic. Edge lines will be placed so as to maintain the original lane width.

(D) It will be the responsibility of the Contractor to protect existing structures such as pipes, inlets, bridges, aprons, etc. from damage which might occur during construction. The Contractor shall replace or repair, as directed by the Project Engineer, any structures damaged by the Contractor during the life of the contract. No payment will be made for the replacement or repair of damaged items.

(E) The Contractor shall erect and maintain construction signing, and provide all signs and traffic handling devices in accordance with the latest edition of the Manual on Uniform Traffic Control Devices (MUTCD).

(F) Incidental work such as removing vegetation, shaping and compaction of shoulder, removing excess asphalt material, project clean-up, and other incidental work necessary to complete the project will not be measured for separate payment, but will be included in other bid items.

(G) If pavement section marking tape is encountered on this project, it shall be located prior to overlaying and placed back in same location after paving operations have ceased. The section marking shall be 8-inch high performance cold plastic detail stripe and shall be four feet (4') in length. The marking shall be centered across the centerline stripe. The cost of this item shall be absorbed in other bid items.

(H) If ponding occurs on any asphalt surface placed as a part of this project, it shall be removed and replaced immediately at no additional cost to the Department.

(I) Removal of object markers is not considered a separate pay item, and shall be absorbed in other items bid.

RESURFACING

Milling, Pavement, Guardrail, and Shoulder Items

1. The roadway (Mainline & Shoulder Both Directions) shall be fine milled to a depth of 1½" for a minimum of 150-foot transition at the project limits. (1,866 SY)
2. The roadway (Mainline & Shoulder Both Directions) shall be fine milled at the bridge ends to a depth of 1½" for 150' transition. (6,070 SY)
3. All channelized intersections, curb and gutter sections, on/off ramp tie-ins, local road tie-ins (to State R.O.W. or as directed by the Engineer), and areas designated by the Project Engineer shall be fine milled (1½" and variable) to ensure smooth transition of new overlay with existing grade. (2,330 SY)
4. Approximately one mile on SR 67 (Mainline & Shoulder Both Directions) from Marshall Road to Tradition Parkway shall be fine milled (1½" and variable). (32,854 SY). Milled area to then be filled with 1½" of 9.5-mm, HT Asphalt (2,968 Tons)
5. Temporary wedges of full lane width asphalt shall be placed immediately after the milling process to allow the safe transition of traffic. The wedges shall be maintained in a satisfactory condition by the Contractor until permanent asphalt is placed. All costs for placing and maintaining these wedges shall be absorbed in other pay items.
6. SR 67 shall be overlaid with 1½" of 9.5-mm, HT asphalt. (61,807 Tons)
7. Paved shoulders, on/off ramps, local roads and driveway pads shall be overlaid with 1½" and variable of 9.5-mm, ST asphalt. Local roads shall be resurfaced to the existing R.O.W.; privately owned entrances shall be surfaced a distance of 10 feet and variable from edge of pavement. Any site grading at local roads or drives will not be measured for separate payment but will be considered an absorbed item. (23,628 Tons)
8. Guardrail including bridge end section, post, and terminal end section shall be removed. Existing object markers shall be removed.
9. Guardrail pads shall be milled to a depth of 1½".
10. Guardrail pads shall be overlaid with 1½" of 9.5-mm, ST asphalt.
11. New guardrail and object markers shall be placed.
12. All existing shoulders shall be raised to match the new pavement elevation by placing Crushed Stone. Placement of crushed stone shall be permitted only on shoulders that require

a lift in elevation and have no curb and gutter. The shoulder material shall be blended, bladed, rolled, and compacted to a finished slope of 4% (absorbed) where practical.

13. Rumble stripes shall be constructed.

Pavement Marking Items

1. Temporary stripe along the mainline, as well as temporary detail stop bars of all intersecting local roads shall be placed on the asphalt surface upon the completion of each lift of mainline operations. Temporary and permanent striping shall be placed according to Standard Drawing PM-1, and shall conform to finished stripe specifications for alignment, neatness, reflectivity, and straightness.
2. Existing striping along bridges shall be removed and replaced with high performance cold plastic striping.
3. Raised Pavement Markers shall be placed along the centerline of roadway at 40-foot intervals in tangent sections and at 40-foot intervals along horizontal curves and interchange limits. High Performance Raised Pavement Markers shall be placed along the edge of pavement at intersecting roads according to Standard Drawing PM-12. Only flexible adhesive meeting the requirements of Subsection 907-720.03 shall be used for placement of raised pavement markers.
4. Red/clear markers shall be placed along holding bars of turn bays at 20 feet intervals. Two-way yellow markers shall be placed as shown on PM-1. Only flexible adhesive shall be allowed for placement of raised pavement markers, meeting the requirements set forth in Subsection 907-720.03 of the Standard Specifications.
5. One way clear / one way yellow raised pavement markers shall be placed in 80’ intervals for the entirety of the project’s mainline along the outside of the rumble strip corresponding with the color of the stripe.

Undersealing

Undersealing shall be placed in the following locations.

Northbound (as measured from joint at I-10)	**Southbound (as measured from Boweevil Road)**
3,190'	6,750'
6,540'	31,350'
6,750'	91,980'
44,250' (existing patch)	95,450'
44,450' (existing patch)	95,750'
44,750' (existing patch)	99,200'

The GPS coordinate for the beginning of the overlay portion of the project is Lat 30°27'22.51"N, Long 88°53'51.37"W.

Any reference to projects SP-0064-01(036), MP-6015-24(009), and SP-0064-01(041) in the plans or proposal is now project NHPP-0064-01(038)/3012000.

STATE	PROJECT NO.
MISS.	

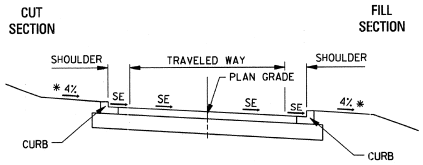

SE=3% TO 6%

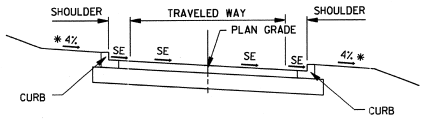

SE=2% TO 3%

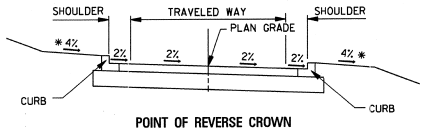

POINT OF REVERSE CROWN

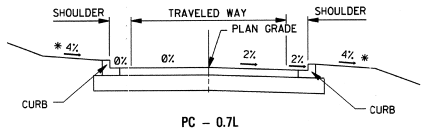

PC – 0.7L

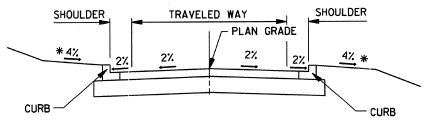

NORMAL CROWN

NOTE: TYPCIAL, OR AS SHOWN ELSEWHERE ON PLANS.

DETAILS OF SHOULDER TREATMENT

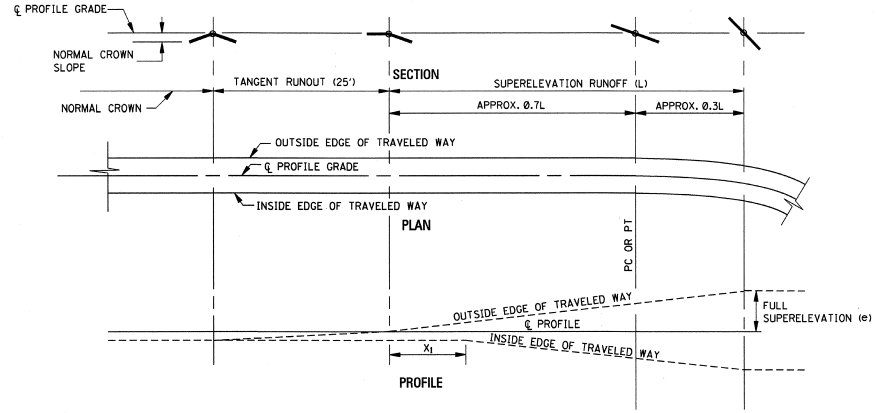

$$X_1 = L\left[\frac{12(NC\ SLOPE)}{12(e)}\right]$$

DIAGRAMMATIC PLAN AND PROFILE

SUPERELEVATION RUNOFF LENGTHS (L)

DESIGN SPEED (mph)	'e'					
	≤ 3.0%	3.5%	4.0%	4.5%	5.0%	5.5%	6.0%
20	40'	45'	50'	60'	65'	70'	75'
25	40'	50'	55'	60'	70'	75'	80'
30	45'	55'	60'	70'	75'	85'	90'
35	55'	60'	65'	75'	80'	90'	95'
40	60'	60'	70'	80'	85'	95'	105'
45	70'	70'	75'	85'	95'	100'	110'

e_{max} = 6%

KEY:

R = RADIUS OF CURVE (ft)
V = DESIGN SPEED (mph)
e = FULL SUPERELEVATION RATE (%)
L = MINIMUM LENGTH OF SUPERELEVATION RUNOFF (FROM ADVERSE CROWN REMOVED TO FULL SUPER) (ft)
NC = NORMAL CROWN (2% CROSS SLOPE)
RC = REVERSE CROWN; SUPERELEVATE AT NORMAL CROWN SLOPE (2%)

GENERAL NOTES:

1. SUPERELEVATION RUNOFF LENGTH (L) FROM TABLE IS USED DIRECTLY FOR ROTATION OF 1-LANE WIDTH (i.e., TWO 12' LANES ROTATED ABOUT THE CENTERLINE). FOR GREATER WIDTHS OF ROTATION:
   L (2 LANES) = 1.5(L) (TABLE)
   L (3 LANES) = 2.0(L) (TABLE)
2. A VERTICAL CURVE WITH A LENGTH (IN FEET) EQUAL TO THE DESIGN SPEED (IN mph) SHOULD BE PLACED AT EXCESSIVE ANGULAR BREAKS.

*3. THE MAXIMUM CROSS SLOPE ALLOWED WILL BE 2% WHERE A SIDEWALK IS REQUIRED.

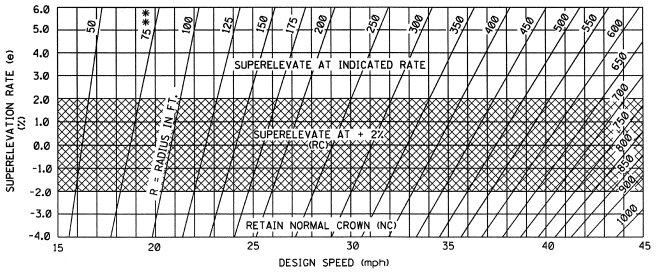

**NOTE: THE VALUES IN THE FIGURE ARE THE CALCULATED (UNROUNDED) VALUES. FOR DESIGN PURPOSES, ROUNDED MINIMUM RADII ARE USED AS FOLLOWS:

	DESIGN SPEED (mph)					
	20	25	30	35	40	45
R_{min} (ft), e=6.0%	75	135	215	320	450	610

BY	REVISION	DATE

MISSISSIPPI DEPARTMENT OF TRANSPORTATION
ROADWAY DESIGN DIVISION
STANDARD PLAN

SUPERELEVATION TRANSITION ROTATION ABOUT CENTERLINE
(URBAN FACILITY, V≤45 mph)

ENGLISH

WORKING NUMBER SE-28

ISSUE DATE: OCTOBER 1, 1998

SHEET NUMBER 282

Notice to Bidders No. 6088 Contd.

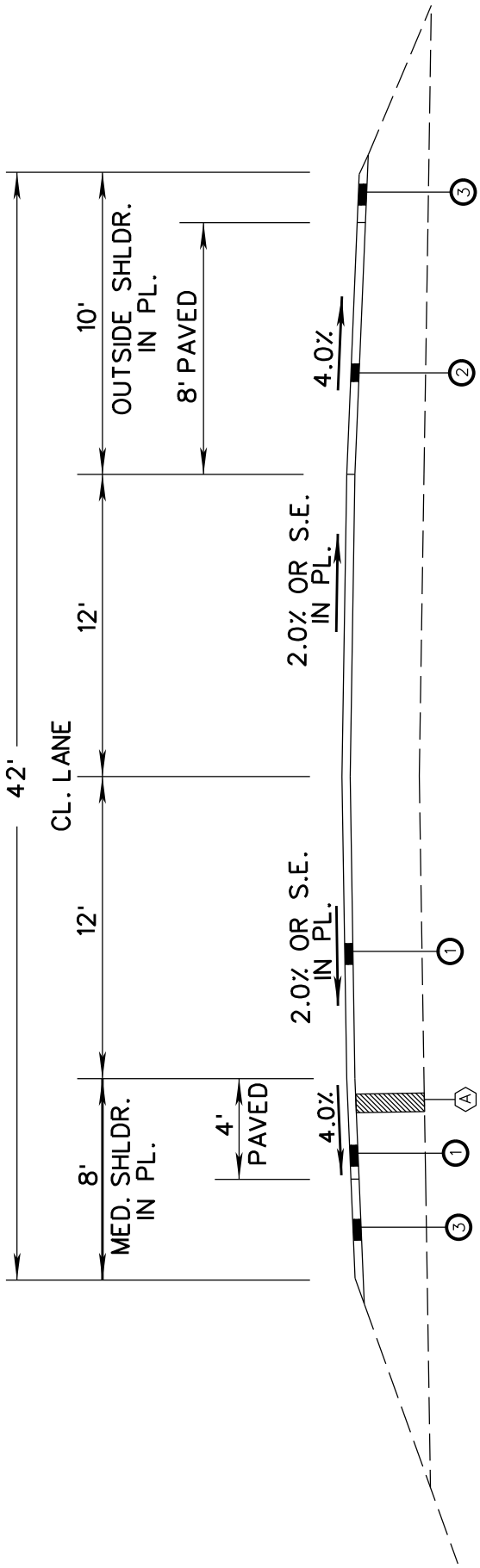

TYPICAL SECTION
LT. & RT LANES
(IN THE DIRECTION OF TRAFFIC)

1 1½" DEPTH 9.5 MM HT ASPHALT PAVEMENT
2 1½" DEPTH 9.5 MM ST ASPHALT PAVEMENT
3 1½" CRUSHED STONE SHOULDER MATERIAL

A VAR. DEPTH GRANULAR MATERIAL AND ASPHALT IN PLACE

MISSISSIPPI DEPARTMENT OF TRANSPORTATION

SECTION 904 - NOTICE TO BIDDERS NO. 6990 **CODE: (SP)**

DATE: **07/24/2025**

SUBJECT: **Plan Corrections**

PROJECT: **HSIP-0064-01(038) / 108634301, NHPP-0064-01(038) / 108634301100, & NHPP-0064-01(038) / 108634301200 -- Harrison County**

Bidders are hereby advised that the project contains multiple project numbers. The following pay items will be divided up equally between these projects, but should be bid as 1 Lump Sum in the proposal:

- 907-618-A001 Maintenance of Traffic
- 620-A001 Mobilization

Bidders are hereby advised that the plan sheets have various external project numbers and detail project numbers listed. Bidders are advised to bid the quantities in the proposal as the total of all projects.

MISSISSIPPI DEPARTMENT OF TRANSPORTATION

SPECIAL PROVISION NO. 907-626-12 **CODE: (IS)**

DATE: 06/17/2025

SUBJECT: Thermoplastic Traffic Markings

Section 626, Thermoplastic Traffic Markings, of the 2017 Edition of the Mississippi Standard Specifications for Road and Bridge Construction is hereby amended as follows.

Delete Section 626 on pages 492 thru 496, and substitute the following.

SECTION 626 - THERMOPLASTIC TRAFFIC MARKINGS

907-626.01--Description. This work consists of furnishing materials and placing thermoplastic pavement markings of the type specified in conformity with these specifications and the details shown on the plans or established. All hot-applied thermoplastic pavement markings shall be coated with a double-drop combination of optics.

This work may also consist of placing an audible bump or puck style marking system on the edge line that provides an audible and vibratory warning when driven over. The marking system shall be a road marking system of the dimensions indicated at regular and predetermined intervals.

This work may also consist of placing a profile or raised shape marking system on centerline or edge line that provides audible and vibratory warning when driven over. The marking system shall be a road marking system of the dimensions indicated and at regular and predetermined intervals. When placed on centerline, the markings system shall consist of an extruded black transverse thermoplastic bar of the dimensions indicated at regular and predetermined intervals.

This work may also consist of placing high contrast thermoplastic markings. High contrast thermoplastic markings shall consist of placing thermoplastic pavement markings over a black thermoplastic pavement marking to enhance the marking's visibility.

All pavement marking material, excluding lines over rumble strips, shall be applied using the extrusion/ribbon method. Lines placed over rumble strips shall be applied using the atomization/spray method, unless the extrusion/ribbon method can be demonstrated to perform adequately and is approved by the Engineer.

Permanent pavement marking tape (permanent cold plastic tape) may be used in lieu of hot applied thermoplastic markings. Substitution will only be allowed for pay items 907-626-A through H. Substituted pavement marking tape shall be of the same color and width as that required for the hot applied thermoplastic. Unless otherwise specified, the markings, whether hot applied or pavement marking tape, shall be of the same type of material for the entire project. Stop bars and crosswalks shall not be substituted with pavement marking tape and shall be alkyd hot-applied thermoplastic markings or heat-fused preformed pavement markings. Material and construction

requirements for substituted pavement marking tape shall meet the requirements of Special Provision 907-628. The layout and spacing for substituted pavement markings will remain as shown in the plans, or in the contract documents, for hot applied thermoplastic markings. Measurement of adhesive substituted pavement markings shall be made in accordance with Special Provision 907-628. Payment for adhesive substituted pavement markings shall be made at the unit price for the appropriate hot applied thermoplastic marking.

When thermoplastic pavement markings are used on bridge decks or concrete surfaces, the surface shall be sealed with an epoxy sealer prior to the application of thermoplastic.

907-626.02--Materials. All pavement marking materials shall meet the requirements of Special Provision 907-720.

907-626.02.1--Audible Bumps. Audible bumps shall have a profile such that the leading and trailing edges are sloped at a sufficient angle to create an audible and vibratory warning.

Audible bumps shall be at least 0.45 inches above the pavement surface at the highest point of the bump. The height shall be measured after the application of drop-on material. The bumps shall have a minimum dimension of two and one-half inches (2½") in both transverse and longitudinal directions. The bumps may have a drainage channel. The width of each drainage channel shall not exceed one-quarter of an inch (¼") at the bottom of the channel.

907-626.02.2--Audible Transverse Bars. The length of transverse bars is the measurement lateral to the direction of travel, also known as transverse width. The width of transverse bars is the measurement parallel to the travel way.

Transverse bars on centerline shall have a length of 10 inches, a width of three inches (3"), and a height of 350 mils. Transverse bars on centerline shall be placed on 2-foot centers through no-passing zones and 5-foot centers through passing zones. Transverse bars on centerline shall be placed in advance of permanent thermoplastic markings.

Transverse bars on edge lines shall have a length of six inches (6"), a width of three inches (3"), and a height of 350 mils. Transverse bars on edge lines shall be placed on 2-foot centers. Tolerance for the longitudinal and transverse measurements shall be one quarter of an inch (¼") and the tolerance for height shall be 50 mils. The above dimensions are based on 6-inch strip application.

Thermoplastic material for edge line transverse bars shall be as specified on the Plans and meet the requirements of Special Provision 907-720 or as specified on the plans. Thermoplastic material for centerline transverse bars shall be black and shall meet the requirements of Special Provision 907-720.

907-626.02.3--High Contrast Markings. High contrast markings shall be black with the pertinent marking color overlaid on top and shall meet the requirements of Special Provision 907-720.

907-626.03--Construction Requirements.

907-626.03.1--Equipment. Equipment for hot application shall be of sufficient size and stability to ensure smooth, uniform, properly aligned markings of the dimensions specified. The equipment shall be suitably equipped for heating and controlling the flow of the material. The equipment shall be constructed to provide continuous mixing and agitation of the material. The conveying parts of the equipment, between the main material reservoir and applicator, shall be so constructed as to prevent accumulation and clogging. The equipment shall be constructed so that all mixing and conveying parts, up to and including the applicator, maintain the material at the plastic temperature. The thermoplastic material shall be dispensed at a temperature recommended by the manufacturer. The applicator shall include a cutoff device remotely controlled to provide clean, square stripe ends and to provide a method for applying skip lines. The thermoplastic reservoir shall be insulated and equipped with an automatic thermostatic control to maintain the proper temperature of the material.

The application equipment shall be capable of automatic placement of intermittent and continuous line patterns in single or double line applications simultaneously. The intermittent timer mechanism shall provide a variable ratio of materials applied and variable cycle length such that accurate placement of new patterns, or replacement of existing patterns can be achieved.

The equipment shall also be capable of applying the top dressing of optics (beads) in a manner that firmly embeds them into the surface of the thermoplastic material for at least one half of the diameter of the larger gradation sizes of the optics. The dispensing equipment shall be equipped with an automatic cut-off control for the application of the optics that is synchronized with the cut-off of the thermoplastic material.

Optics applied to the surface of the completed stripe shall be applied by an automatic dispenser attached to the pavement marking equipment in such a manner that the optics are immediately dispensed upon the completed line. The dispenser shall be equipped with an automatic cutoff control, synchronized with the cutoff of the pavement marking equipment. The double-drop optics as defined in 907-720 shall be automatically applied at a uniform rate to achieve the minimum retroreflectivity requirements of 907-626.

907-626.03.2--Construction Details. The thermoplastic compound shall be screed or ribbon extruded to the pavement surface. Heat-fused, pre-formed pavement markings shall be fusible to asphalt surfaces by means of the normal heat of a propane weed-burner type of torch or other heating device as recommended by the manufacturer. Heat-fused, pre-formed pavement markings shall be instantly highly reflective without the application of additional optics.

Thermoplastic markings shall not be applied to the pavement surface when the pavement surface temperature is less than 55°F. The pavement surface shall be dry, to the satisfaction of the Engineer, before application will be permitted. Unless otherwise specified by the manufacturer, thermoplastic pavement marking material shall be applied to the surface between 400°F and 450°F with a recommended application temperature being 420°F.

Immediately before application, all areas to be marked shall be thoroughly cleaned. Cleaning may be done by rotary brooms, air blast, scrapers, or whatever combination of equipment is necessary to clean the pavement thoroughly without damage to the pavement surface. On areas of pavement

cured with compound, the membrane shall be removed completely by shot blasting, sand blasting or other approved method. Before edge striping, particular care shall be taken to remove all vegetation, loose soil, and the like from the area to be marked. Should other methods fail, the surface shall be wetted with a water jet and scrubbed as necessary to dislodge all foreign material. After washing, the surface shall be allowed to dry thoroughly, and all films of dried mud apparent after surface drying shall be removed before application of markings. Marking shall follow as closely as practicable after the surface has been cleaned and dried, but no markings shall be applied until the surface has been inspected and permission given to proceed. The cost for preparing the surface shall be included in the contract unit prices for the marking items.

Unless otherwise directed by the Engineer, traffic stripes that are conflicting with the thermoplastic stripe shall be removed prior to placement of the thermoplastic material. Removal of pavement markings shall be done by a means that will not gouge the surface of the pavement in a manner that requires patching to ensure the integrity of the pavement. Temporary paint stripe may be left in place when satisfactorily placed in the proper location. Any temporary stripe not covered shall be removed. Payment for removal of stripe, except temporary stripe, will be made under Section 202.

On newly constructed asphalt pavements, any sand, grit, or other surface contaminants shall be removed using compressed air and/or sweeping. Water blasting may be necessary to remove surface contaminants which cannot be removed by the use of compressed air and/or sweeping. This work is considered surface preparation.

The finished lines shall have well defined edges and the thickness of thermoplastic markings above the roadway surface shall be no less than 90 mils for edge lines, center lines, lane lines, barrier lines, and detail stripe including gore markings, and no less than 120 mils for crosswalks, stop lines, and railroad, word and symbol markings. The minimum thickness, as required above, will be measured in the center of the line when gauged. The minimum thickness one-half inch (½") from the edges shall not be less than 75% of the thickness required in the center.

Any thermoplastic traffic marking less than the required thickness shall be corrected by recapping at no additional costs to the Department. Although a thickness tolerance of 25 percent from center to edge is allowed, a consistent underrun of any amount in thickness as determined by the Engineer will not be acceptable.

The length and width of lines shall be within a tolerance of ±3 inches and ±1/8 inch, respectively. For skip markings, the tolerance for intervals shall not exceed the line length tolerance. On curves, unsightly variations from the normal curvature will not be permitted unless specifically shown on the plans or ordered by the Engineer.

Heat-fused, pre-formed pavement markings shall be supplied with a minimum average thickness of 90 mils before application on the roadway surface.

All newly applied thermoplastic material shall be protected from traffic until the material is sufficiently dry so as not to sustain damage from vehicle tires. Any material so damaged by traffic shall be repaired, and the thermoplastic material tracked onto the pavement shall be removed and

replaced.

907-626.03.3--Reflectivity Requirements. The longitudinal pavement markings shall meet the following retroreflectivity values when measured within 10 to 30 calendar days of placement, after removing loose beads.

Table 1. Minimum Dry Retroreflectivity

Color	All Stripe without Rumble $mcd/m^2/lx$	Rumble Stripe $mcd/m^2/lx$
White	375	250
Yellow	225	150

For projects with less than two miles between the BOP and EOP, retroreflectivity measurements will not be required.

907-626.03.3.1--Measuring Devices. Retroreflectivity measurements are required to be taken using a vehicle mounted mobile retroreflectometer using 30-meter geometry with video and mapping capabilities as per AASHTO T-398. The retroreflectometer and operator shall be certified by the manufacturer, authorized representative of the manufacturer, or an MDOT approved program such as the Texas A&M Transportation Institute (TTI) Mobile Retroreflectometer Certification Program. The Contractor shall provide copies of current certifications for the operator(s) and the device(s) to the Engineer.

907-626.03.3.2--Acceptance Procedure. Averages of the mobile measurements shall be provided for every 0.1 miles unless otherwise specified or approved. Take measurements on each section of roadway for each series of markings (i.e., edge line, center skip line, each line of a double line, etc.) and for each direction of traffic flow. Measure each line in both directions for centerlines on two-way roadways (i.e., measure both double solid line in both directions and measure all center skip lines in both directions). Furnish measurements in compliance with the below requirements. Use all equipment in accordance with the manufacturer's recommendations and directions. Inform the Engineer at least 24 hours before taking any measurements.

A marking meets the retroreflectivity requirements if:

- The combined average retroreflectivity value for a one-mile segment meets the minimum retroreflectivity values specified, and
- Within the one-mile segment, no more than three consecutive 0.1 mile intervals shall have an average retroreflectivity value below the minimum required value.

The one-mile segment will start from the beginning of the data collection and end after a mile worth of measurements have been taken; each subsequent mile of measurements will be a new segment. If the remainder is 0.5 miles or less, it shall be included in the previous mile segment, otherwise the remaining segment of greater than 0.5 mile shall be its own segment. Centerlines with 2 stripes (either solid or broken) will result in 2 miles of data for each mile segment. Each centerline stripe must be tested for compliance as a stand-alone stripe.

The Contractor may elect to restripe with a minimum of 0.060 in. (60 mils) at no cost to the Department each one-mile segment that failed to meet the minimum retroreflectivity requirements.

Measurements shall be retaken within 10 to 30 calendar days after the second application for the mile segment for that series of markings. If the markings do not meet minimum retroreflectivity after the second application, the Engineer may require removal of all existing markings, a new application as initially specified, and a repeat of the application process until minimum retroreflectivity requirements are met.

907-626.03.3.3--Mobile Retroreflectivity Data Collection. Mobile Retroreflectivity Data Collection (MRDC) shall be conducted on dry pavement only and when the ambient air temperature is greater than 40°F. Data shall be submitted to the Engineer no later than 3 working days after the day the data is collected. Submit all raw data collected in addition to all other data submitted. Provide data files in Microsoft Excel format or a format approved by the Engineer. The data file and video must contain the following information.

907-626.03.3.3.1--Data File. Data files shall be provided with the following:

- Date;
- District;
- County;
- Name of mobile retroreflectometer operator;
- Route number with reference markers or other reference information provided by the Engineer to indicate the location of beginning and end data collection points on that roadway;
- Cardinal direction;
- Line type (single solid, single broken, double solid, etc.);
- Line color;
- File name corresponding to video;
- Data for each centerline listed separately;
- Average reading taken for each 0.1-mi. interval (or interval designated by the Engineer);
- Accurate GPS coordinates (within 20 ft.) for each interval;
- Color-coding for each interval indicating passing or failing, unless otherwise directed by the Engineer (passing and failing thresholds provided by the Engineer);
- Graphical representation of the MRDC (y-axis showing retroreflectivity and x-axis showing intervals) corresponding with each data file;
- Distance in miles driven while measuring the pavement markings;
- Event codes (pre-approved by the Engineer) indicating problems with measurement;
- Upper validation threshold (may be included separately with the raw data but must be clearly identified with the data collected using that threshold).

907-626.03.3.3.2--Map. A map shall be provided in an electronic format approved by the Engineer with each MRDC submission that includes the following information:

- Date;
- District number;
- County;

- Color-coded 1-mi. intervals (or interval length designated by the Engineer) for passing and failing retroreflectivity values or retroreflectivity threshold values provided by the Engineer; and
- Percentage of passing and failing intervals, if required by the Engineer.

907-626.03.3.3.3--Video. A high-quality video file shall be provided with the following information:

- Date and corresponding data file name on label;
- District number;
- County;
- Route number with reference markers or other designated reference information to indicate the location of beginning and end collection points on that roadway; and
- Retroreflectivity values presented on the same screen with the following information:
    - Date;
    - Location;
    - Starting and ending mileage;
    - Total miles;
    - Retroreflectivity readings; and
    - Upper validation thresholds (may be included separately with the raw data but must be clearly identified with the data collected using that threshold).

907-626.03.4--Reflectivity Verification Testing. The Engineer or a third party may perform retroreflectivity verification testing on any project. At a minimum, each Contractor performing work for the Department will be verified on an annual basis. The Contractor-submitted retroreflectivity data will be compared to the verification test data to determine acceptability of the Contractor's mobile retroreflectometer data. Comparison of the data will result in one of the two scenarios below:

- Contractor's Data is Validated – If the difference between Contractor's and Engineer/third party data is 20% or less, then the Contractor's data is validated. The Contractor's data will be used for acceptance.
- Contractor's Data is not Validated – If the difference between the Contractor's and Engineer/third party data is more than 20%, then the Contractor's data is not validated. The Engineer/third party data will be used for acceptance and the Contractor will be required to take corrective action prior to additional Contractor data collection and may require re-certification of the mobile retroreflectometer.

907-626.04--Method of Measurement. Thermoplastic stripe completed in accordance with the plans and specifications will be measured by the mile or by the linear foot, as indicated, from end-to-end of individual stripes. In the case of skip lines the measurement will include skip intervals. The length used to measure centerline, lane lines, and edge stripes will be the horizontal length computed along the roadway.

Detail traffic stripe will be measured by the linear foot from end-to-end of individual stripes. Measurements will be made along the surface of each stripe and will exclude skip intervals where

skips are specified. Stripes more than six inches (6") in width will be converted to equivalent lengths of 6-inch stripe.

Hot-applied legend, which is to include railroad markings, pedestrian crosswalks, and stop lines, will be measured by the square foot or linear foot. Pay areas of individual letters and symbols will usually be shown on the plans and measured by the square foot. Transverse railroad bands, pedestrian crosswalks and stop lines will generally be measured by the linear foot, in which case, stripes more than six inches (6") in width will be converted to equivalent lengths of 6-inch widths.

Pre-formed legend which is to include railroad markings and pedestrian crosswalks will be measured and paid for by each.

The length measured for thermoplastic audible bump edge stripe will not include the permanent thermoplastic edge stripe. Permanent thermoplastic edge stripe will be measured for payment under a separate pay item.

Thermoplastic audible bar centerline skip stripe will be measured by the linear foot or mile. Measurements will be made along the surface from end-to-end of the stripe and will include skip intervals. The length used to measure audible bar centerline stripe will be the horizontal length computed along the roadway. The length measured for thermoplastic audible bar centerline skip stripe will not include the permanent centerline continuous or skip stripe. Permanent centerline continuous and skip stripe will be measured for payment under separate pay items.

Thermoplastic audible bar edge stripe will be measured by the linear foot or mile. Measurements will be made along the surface from end-to-end of the stripe. The length used to measure thermoplastic audible bar edge stripe will be the horizontal length computed along the roadway. The length measured for thermoplastic audible bar edge stripe will not include the permanent thermoplastic edge stripe. Permanent thermoplastic edge stripe will be measured for payment under a separate pay item.

907-626.05--Basis of Payment. Thermoplastic traffic markings will be paid for at the contract unit price per mile, linear foot, square foot or each as applicable. Any deductions for non-satisfactory material test results will be made after final testing has been performed.

Payment will be made under:

907-626-A:	6" Thermoplastic Traffic Stripe, Skip White	- per linear foot or mile
907-626-B:	6" Thermoplastic Traffic Stripe, Continuous White	- per linear foot or mile
907-626-C:	6" Thermoplastic Edge Stripe, Continuous White	- per linear foot or mile
907-626-D:	6" Thermoplastic Traffic Stripe, Skip Yellow	- per linear foot or mile
907-626-E:	6" Thermoplastic Traffic Stripe, Continuous Yellow	- per linear foot or mile

907-626-F:	6" Thermoplastic Edge Stripe, Continuous Yellow	- per linear foot or mile
907-626-G:	Thermoplastic Detail Stripe, Color *	- per linear foot
907-626-H:	Thermoplastic Legend, Color *	- per linear foot, square foot, or per each
907-626-Q:	Thermoplastic Audible Bump Edge Stripe	-per linear foot or mile
907-626-R:	Thermoplastic Detail Audible *** Stripe, Color **,	-per mile
907-626-AA:	6" High Contrast Thermoplastic Traffic Stripe, Skip White	- per linear foot or mile
907-626-BB:	6" High Contrast Thermoplastic Traffic Stripe, Continuous White	- per linear foot or mile
907-626-CC:	6" High Contrast Thermoplastic Edge Stripe, Continuous White	- per linear foot or mile
907-626-DD:	6" High Contrast Thermoplastic Traffic Stripe, Skip Yellow	- per linear foot or mile
907-626-EE:	6" High Contrast Thermoplastic Traffic Stripe, Continuous Yellow	- per linear foot or mile
907-626-FF:	6" High Contrast Thermoplastic Edge Stripe, Continuous Yellow	- per linear foot or mile
907-626-GG:	High Contrast Thermoplastic Detail Stripe, Color *	- per linear foot
907-626-HH:	High Contrast Thermoplastic Legend, Color *	- per linear foot, square foot, or each

* Indicate Blue - ADA if applicable
** Indicate White or Black
*** Indicate Centerline - Passing Zone, Centerline - No-Passing Zone, or Edge Line

MISSISSIPPI DEPARTMENT OF TRANSPORTATION

SPECIAL PROVISION NO. 907-720-4 **CODE: (IS)**

DATE: 06/17/2025

SUBJECT: Pavement Marking Materials

Section 720, Pavement Marking Materials, of the 2017 Edition of the Mississippi Standard Specifications for Road and Bridge Construction is hereby amended as follows.

Delete Section 720 on pages 840 thru 854, and substitute the following.

SECTION 720 - PAVEMENT MARKING MATERIALS

907-720.01--General. The Department reserves the right to perform sampling and testing of any materials at any time. Upon request of the Engineer, samples of the material shall be furnished.

907-720.02--Color Requirements. All pavement markings except raised pavement markers are required to meet the color requirements of ASTM D6628.

907-720.03--Optics. Optics used in thermoplastic pavement markings shall consist of a double-drop system of glass beads or advanced optics.

907-720.03.1--Glass Beads. The manufacturer shall furnish the Engineer with a certified test report indicating that the glass beads meet AASHTO M 247. AASHTO Type 4 beads shall be applied to the newly placed stripe first, followed by the application of AASHTO Type 1 or Type 2 beads. Type 1, 2, and 4 glass beads shall be transparent, clean, colorless glass, smooth and spherically shaped, free from milkiness, pits, or excessive air bubbles. Type 1, 2, and 4 glass beads shall be coated with a bead coating that is compatible with the traffic marking material to which the glass beads will be applied and will provide adequate moisture proofing, increased adhesion, and optimum embedment of the glass beads.

907-720.03.1.1--Acceptance Procedure. The Contractor shall furnish the Engineer with a copy of the manufacturer's certified test reports for the lot(s) of materials from which the shipment originated. The test report shall show all the test results for the material properties and characteristics as specified herein. The test report shall state that the material represented by the test results meets all the requirements of the contract. It shall be the Contractor's responsibility to furnish the manufacturer's test report to the Engineer for each shipment of material to the project.

Acceptance sampling and testing will be in accordance with the Materials Division Inspection, Testing, and Certification Manual (Materials Manual).

907-720.03.2--Advanced Optics. Advanced optics are materials that do not meet the specific requirements of AASHTO M 247 but produce a final drop-on optics system that meets or exceeds the reflectivity requirements in Special Provision 907-626. Advanced optics shall be a double-

drop system that is pre-approved and listed on the Department's Approved Products List.

907-720.03.2.1--Acceptance Procedure. The Contractor shall furnish the Engineer with a copy of the manufacturer's certified test reports for the lot(s) of materials from which the shipment originated. The test report shall show all the test results for the material properties and characteristics as specified herein. The test report shall state that the material represented by the test results meets all the requirements of the contract. It shall be the Contractor's responsibility to furnish the manufacturer's test report to the Engineer for each shipment of material to the project.

Acceptance sampling and testing may be conducted at the request of the Engineer.

907-720.04--Thermoplastic Marking Material. Thermoplastic marking material shall meet the color requirements of Subsection 907-720.02.

There shall be no obvious change in the color of the material if held at its plastic temperature for a period of four (4) hours nor by reason of four (4) re-heatings to its plastic temperature.

The pavement markings shall maintain its original dimension and placement. The material shall not be slippery when wet and it shall not lift from the pavement in freezing weather.

907-720.04.1--Extruded Thermoplastic Material. Extruded thermoplastic pavement marking material shall meet the requirements of AASHTO M 249, and shall meet the requirements of 907-720.04 with the following exceptions:

- Blue - ADA thermoplastic marking material shall meet the requirements of Subsection 907-720.04.2 with the exception that the color shall be Blue – ADA, and the Contractor may use hot applied thermoplastic materials meeting the satisfaction of the Engineer.

907-720.04.2--Spray-Applied Thermoplastic Material. Spray-applied thermoplastic pavement marking material shall meet the requirements of AASHTO M 249 and shall meet the requirements of 907-720.04.

907-720.04.3--Pre-formed Thermoplastic Material. Heat-fused, pre-formed thermoplastic pavement marking material shall meet the color requirements of 907-720.02.

907-720.04.4--Acceptance Procedure. The Contractor shall furnish the Engineer with a copy of the manufacturer's certified test reports for the lot(s) of materials from which the shipment originated. The test report shall show all the test results for the material properties and characteristics as specified herein. The test report shall state that the material represented by the test results meets all the requirements of the contract. It shall be the Contractor's responsibility to furnish the manufacturer's test report to the Engineer for each shipment of material to the project.

907-720.05--Pavement Marking Tape. Pavement marking tape shall be listed on the Department's Approved Lists.

907-720.05.1--Cold Plastic Pavement Markings (Permanent Pavement Marking Tape).

Pavement marking tape for use in roadway applications shall be designated on the Department's Approved Lists as permanent.

The prefabricated markings described shall consist of white or yellow pigmented plastic films with reflective optics uniformly distributed throughout their entire cross-sectional area, and be capable of being affixed by either a pressure sensitive pre-coated adhesive or a liquid contact cement. The markings shall be provided complete in a form that will facilitate rapid application and protect the markings in shipment and storage. The manufacturer shall identify proper solvents and/or adhesives to be applied at the time of application, all equipment necessary for proper application, and recommendations for application that will assure an effective performance life.

Prefabricated legends and symbols shall conform to the applicable shapes and sizes as outlined in the current "Manual on Uniform Traffic Control Devices."

907-720.05.1.1--Specific Requirements. Unless otherwise indicated on the plans, the patterned material without adhesive shall have a minimum caliper of 0.065 inch at the thickest portion of the patterned cross-section and a minimum caliper of 0.020 inch at the thinnest portion of the cross-section. The material shall be a pliant polymer film with 50±15% of the surface are raised and presenting a near vertical face angle of 0° to 60° to traffic from any direction. The channels between the raised areas shall be substantially free of exposed optics or particles.

The size and quality of the optics will be such that performance requirements of Subsection 907-720.02 for the retroreflective pliant polymer film shall be met. The pigments shall be selected and blended to provide a marking film that is white or yellow conforming to the performance requirements of Subsection 907-720.02 through the expected life of the film.

907-720.05.1.2--Conformability and Resealing. The marking shall be capable of conforming to pavement contours, breaks, faults, etc. through the action of traffic at normal pavement temperatures.

The marking shall have resealing characteristics that allows it to be capable of fusing with itself and previously applied marking of the same composition under normal conditions of use. The marking shall be capable of use for patching worn areas of the same type in accordance with manufacturer's instructions.

907-720.05.1.3--Tensile Strength and Elongation. The material shall have a minimum tensile strength of 40 pounds per square inch of cross section when tested according to ASTM D 638. A 6-inch x 1-inch x 0.06-inch sample shall be tested at a temperature between 70°F and 80°F using a jaw speed of 12 inches per minute.

The material shall have a minimum elongation of 75% at break when tested according to ASTM D 638 using a jaw speed of 12 inches per minute.

907-720.05.1.4--Skid Resistance. The surface of the material shall provide a minimum skid resistance value of 45 BPN when tested according to ASTM E 303 except values will be taken at downweb and at a 45-degree angle from downweb. These two values will then be averaged to

find the skid resistance of the patterned surface.

907-720.05.1.5--Effective Performance Life and Warranty. When applied according to the recommendations of the manufacturer the pavement marking tape shall provide a neat and durable marking that will not flow or distort due to temperature if the pavement surface remains stable. The film shall be weather resistant and through normal traffic wear shall show no appreciable fading, lifting, or shrinkage throughout the useful life of the marking, nor shall it show significant tearing, roll back, or other signs of poor adhesion.

All manufacturer's standard warranties and guarantees on pavement marking tape, which are provided as customary trade practice, shall be delivered to the Engineer at the final inspection. All warranties and guarantees shall be made out to the Department.

907-720.05.1.6--Acceptance Procedure. The Contractor shall furnish the Engineer with a copy of the manufacturer's certified test reports for the lot(s) of materials from which the shipment originated. The test report shall show all the test results for the material properties and characteristics as specified herein. The test report shall state that the material represented by the test results meets all the requirements of the contract. It shall be the Contractor's responsibility to furnish the manufacturer's test report to the Engineer for each shipment of material to the project.

Acceptance sampling and testing will be in accordance with the Materials Division Inspection, Testing, and Certification Manual (Materials Manual). Samples of the material shall be furnished and shall be provided at no cost to the State.

907-720.05.2--Preformed Pavement Markings for Construction Zones. Preformed pavement markings for construction zones shall be designated Department’s Approved Lists as temporary. Retroreflective preformed pavement markings for construction zones shall be as specified on the plans or in the contract documents.

The markings shall be provided in specified widths and shapes. Preformed words and symbols shall conform to the applicable shapes and sizes as outlined in the current "Manual on Uniform Traffic Control Devices for Streets and Highways," or as modified.

The materials shall be packaged in accordance with accepted commercial standards and when stored indoors in a cool dry place, shall be suitable for use one year after date of purchase.

907-720.05.2.1--Specific Requirements. Preformed markings shall consist of retroreflective materials on a conformable backing and shall meet the performance requirements of Subsection 907-720.02. The markings shall consist of a mixture of high-quality polymeric materials, pigments, and optics with a reflective layer of optics bonded to the top surface. The markings shall be pre-coated with a pressure sensitive adhesive capable of adhering to pavement in accordance with the manufacturer's instructions without the use of heat, solvents, or other additional adhesives. The markings and/or adhesive shall not require any curing time after application. A coated non-metallic medium shall be incorporated with the pressure sensitive adhesive to facilitate removal.

907-720.05.2.2--Acceptance Procedure. The Contractor shall furnish the Engineer with a copy

of the manufacturer's certified test reports for the lot(s) of materials from which the shipment originated. The test report shall show all the test results for the material properties and characteristics as specified herein. The test report shall state that the material represented by the test results meets all the requirements of the contract. It shall be the Contractor's responsibility to furnish the manufacturer's test report to the Engineer for each shipment of material to the project.

907-720.06--Raised Pavement Markers. Pavement markers shall be listed on the Department's Approved Lists and shall conform to ASTM D 4280.

907-720.06.1--Packaging. Shipments shall be made in containers acceptable to common carriers and packaged in such a manner as to ensure delivery in perfect condition. All damaged shipments shall be replaced by the Contractor. Each package shall be clearly marked as to the name of the manufacturer, type, quantity enclosed, lot number, and date of manufacture.

907-720.06.2--Non-Reflective Pavement Markers. Non-reflective pavement markers are occasionally referred to as "jiggle markers". Non-reflective markers consisting of a heat-fired, vitreous, ceramic base, and a heat-fired, opaque, glazed surface are permitted for use; the bottom of the marker shall not be glazed. Ceramic markers shall be produced from any suitable combination of intimately mixed clays, shales, talcs, flints, feldspars, or other inorganic material. Ceramic markers shall be thoroughly and evenly matured, and all non-reflective pavement markers shall be free from defects which affect appearance or serviceability.

Ceramic non-reflective markers shall conform to the following finish and testing requirements in Table 2 below.

Table 2

Ceramic Non-Reflective Marker Requirements	
Glaze Thickness	0.005 inch, minimum
Mohs Hardness	6, minimum
Autoclave	Glaze shall not spall, craze, or peel.
Compressive Strength	750 psi, minimum
Water Absorption	2.0%, maximum

907-720.06.3--Acceptance Procedure. The Contractor shall furnish the Engineer with a copy of the manufacturer's certified test reports for the lot(s) of materials from which the shipment originated. The test report shall show all the test results for the material properties and characteristics as specified herein. The test report shall state that the material represented by the test results meets all the requirements of the contract. It shall be the Contractor's responsibility to furnish the manufacturer's test report to the Engineer for each shipment of material to the project.

907-720.07--Adhesive for Pavement Markers. The adhesive shall be listed on the Department's Approved Lists and shall be an asphaltic material suitable for bonding pavement markers to surfaces when the road surface and marker temperatures are in the range of 50°F to 160°F. The composition of the adhesive must be such that its properties will not deteriorate when heated to and applied at temperatures up to 425°F. Samples may be submitted in the form of an adhesive testing package from each batch or material obtained from a package shipped to the project.

907-720.07.1--Packaging and Labeling. The adhesive shall be packaged in self-releasing cardboard containers that will stack properly. The label shall show the manufacturer, quantity, and lot or batch number. "Adhesive for Pavement Markers" or "Adhesive for Traffic Markers" shall be printed in bold lettering on the label.

907-720.07.2--Bituminous Adhesive. The asphaltic adhesive material shall be flexible type.

907-720.07.2.1--Flexible Bituminous Adhesive. Flexible bituminous adhesive shall be designated on the Department's Approved Lists as flexible and shall comply with requirements of Table 3 below.

Table 3

Flexible Bituminous Adhesive Properties			
	Min	Max	Test Method
Penetration @ 77°F	-	25	ASTM D 5
Softening Point, °F	200	-	ASTM D 36
Brookfield Viscosity @ 400°F, cp.	-	10,000	ASTM D 3236
Ductility @ 77°F, 5 cm/min	15	-	ASTM D 113
Ductility @ 39.2°F, 1 cm/min	5	-	ASTM D 113
Asphalt Compatibility	Pass		ASTM D 5329
Flexibility @ 20°F	Pass		Per Subsection

907-720.07.3--Samples of the material shall be furnished and shall be provided at no cost to the State.

Safety Improvements on MS 67 from US 49 to the I-10 "Superstreets" Corridor, known as Federal Aid Project Nos. NHPP-0064-01(038) / 1086343011, HSIP-0064-01(038) / 108634301 & NHPP-0064-01(038) / 1086343012 in Harrison County.

Line No.	Item Code	Adj Code	Quantity	Units	Description [Fixed Unit Price]
				Roadway Items	
0010	201-A001		1	Lump Sum	Clearing and Grubbing
0012	202-A001		1	Lump Sum	Removal of Obstructions
0020	202-B006		55,169	Square Yard	Removal of Asphalt Paved Shoulders, All Depths
0030	202-B007		65,034	Square Yard	Removal of Asphalt Pavement, All Depths
0040	202-B059		700	Square Yard	Removal of Concrete Median & Island Pavement, All Depths
0050	202-B063		1,618	Square Yard	Removal of Concrete Paved Ditch
0060	202-B088		2,380	Linear Feet	Removal of Curb & Gutter, All Types
0070	202-B092		270	Linear Feet	Removal of Curb, All Types
0080	202-B129		17	Each	Removal of Flared End Section, All Sizes
0090	202-B135		27	Each	Removal of Guard Post
0100	202-B150		6,375	Linear Feet	Removal of Guard Rail Including Post, Blockouts & Hardware
0110	202-B162		1	Each	Removal of Impact Attenuator
0120	202-B164		77	Each	Removal of Inlet and Junction Box, All Types & Sizes
0130	202-B170		10	Each	Removal of Junction Box
0140	202-B176		1	Each	Removal of Lighting Controllers
0150	202-B179		19	Each	Removal of Low Mast Lighting Foundation
0160	202-B191		273	Linear Feet	Removal of Pipe, 8" And Above
0170	202-B195		19	Each	Removal of Pull Box
0172	202-B240		13,200	Linear Feet	Removal of Traffic Stripe
0180	202-B278		171	Each	Removal & Replacement of Edge Drain Outlet
0190	203-A001	(E)	70,062	Cubic Yard	Unclassified Excavation, FM, AH
0200	203-EX018	(E)	8,751	Cubic Yard	Borrow Excavation, AH, FME, Class B7-6
0210	203-G001	(E)	10,615	Cubic Yard	Excess Excavation, FM, AH
0220	206-A001	(S)	1,655	Cubic Yard	Structure Excavation
0230	206-B001	(E)	5	Cubic Yard	Select Material for Undercuts, Contractor Furnished, FM
0240	209-A005		285,500	Square Yard	Geotextile Stabilization, Type V, Non-Woven
0250	211-B001	(E)	29,203	Cubic Yard	Topsoil for Slope Treatment, Contractor Furnished
0260	213-C001		55	Ton	Superphosphate
0270	216-A001		2,804	Square Yard	Solid Sodding
0280	217-A001		10,082	Square Yard	Ditch Liner
0290	219-A001		56	Thousand Gallon	Watering [$20.00]
0300	220-A001		109	Acre	Insect Pest Control [$30.00]

Line No.	Item Code	Adj Code	Quantity	Units	Description [Fixed Unit Price]
0310	221-A001	(S)	380	Cubic Yard	Concrete Paved Ditch
0320	223-A001		109	Acre	Mowing [$50.00]
0330	225-A001		109	Acre	Grassing
0340	225-B001		326	Ton	Agricultural Limestone
0350	225-C001		217	Ton	Mulch, Vegetative Mulch
0360	226-A001		109	Acre	Temporary Grassing
0370	229-A001		5,112	Square Yard	Erosion Mat
0380	237-A002		13,016	Linear Feet	Wattles, 20"
0390	246-B001		22,431	Each	Rockbags
0400	249-A001		715	Ton	Riprap for Erosion Control
0410	406-D001		47,224	Square Yard	Fine Milling of Bituminous Pavement, All Depths
0420	407-A001	(A2)	181,457	Gallon	Asphalt for Tack Coat
0430	423-A001		67	Mile	Rumble Strips, Ground In
0440	503-C010		141,194	Linear Feet	Saw Cut, Full Depth
0450	601-A001	(S)	63	Cubic Yard	Class "B" Structural Concrete
0460	601-B001	(S)	193	Cubic Yard	Class "B" Structural Concrete, Minor Structures
0470	602-A001	(S)	22,650	Pounds	Reinforcing Steel
0480	603-CA012	(S)	3,700	Linear Feet	18" Reinforced Concrete Pipe, Class III, Rubber Type Gaskets
0490	603-CA027	(S)	32	Linear Feet	24" Reinforced Concrete Pipe, Class III, Rubber Type Gaskets
0500	603-CA041	(S)	16	Linear Feet	30" Reinforced Concrete Pipe, Class III, Rubber Type Gaskets
0510	603-CA056	(S)	8	Linear Feet	36" Reinforced Concrete Pipe, Class III, Rubber Type Gaskets
0520	603-CA067	(S)	8	Linear Feet	42" Reinforced Concrete Pipe, Class III, Rubber Type Gaskets
0530	603-CA077	(S)	8	Linear Feet	48" Reinforced Concrete Pipe, Class III, Rubber Type Gaskets
0540	603-CA088	(S)	32	Linear Feet	54" Reinforced Concrete Pipe, Class III, Rubber Type Gaskets
0550	603-CB003	(S)	14	Each	18" Reinforced Concrete End Section
0560	603-CB004	(S)	3	Each	24" Reinforced Concrete End Section
0570	603-CB005	(S)	2	Each	30" Reinforced Concrete End Section
0580	603-CB006	(S)	1	Each	36" Reinforced Concrete End Section
0590	603-CB007	(S)	1	Each	42" Reinforced Concrete End Section
0600	603-CB008	(S)	1	Each	48" Reinforced Concrete End Section
0610	603-CB009	(S)	3	Each	54" Reinforced Concrete End Section
0620	603-CE003	(S)	5,116	Linear Feet	22" x 13" Concrete Arch Pipe, Class A III, Flexible Plastic Gaskets
0630	603-CF002	(S)	62	Each	22" x 13" Concrete Arch Pipe End Section

Line No.	Item Code	Adj Code	Quantity	Units	Description [Fixed Unit Price]
0640	603-SB004	(S)	2	Each	18" Branch Connections, Stub into 54" Concrete Pipe
0650	604-A001		1,594	Pounds	Castings
0660	604-B001		24,150	Pounds	Gratings
0670	606-B003		3,500	Linear Feet	Guard Rail, Class A, Type 1, 'W' Beam, Metal Post
0680	606-D001		24	Each	Guard Rail, Bridge End Section
0690	606-E001		24	Each	Guard Rail, Terminal End Section
0700	609-B003	(S)	3,430	Linear Feet	Concrete Curb, Special Design for Slotted Curb
0710	609-D003	(S)	17,933	Linear Feet	Combination Concrete Curb and Gutter Type 2
0720	609-D012	(S)	27,438	Linear Feet	Combination Concrete Curb and Gutter Type 3A Modified
0730	612-A001		23	Cubic Yard	Flowable Fill, Excavatable
0740	616-A001	(S)	22,788	Square Yard	Concrete Median and/or Island Pavement, 10-inch
0750	616-A004	(S)	4,320	Square Yard	Concrete Median and/or Island Pavement, 4-inch
0760	619-A1001		42	Mile	Temporary Traffic Stripe, Continuous White
0770	619-A1002		7,402	Linear Feet	Temporary Traffic Stripe, Continuous White
0780	619-A2001		38	Mile	Temporary Traffic Stripe, Continuous Yellow
0790	619-A2002		4,320	Linear Feet	Temporary Traffic Stripe, Continuous Yellow
0800	619-A3001		45	Mile	Temporary Traffic Stripe, Skip White
0810	619-A5001		541,194	Linear Feet	Temporary Traffic Stripe, Detail
0820	619-A6001		16,159	Square Feet	Temporary Traffic Stripe, Legend
0830	619-A6002		9,515	Linear Feet	Temporary Traffic Stripe, Legend
0840	619-D1001		328	Square Feet	Standard Roadside Construction Signs, Less than 10 Square Feet
0850	619-D2001		2,304	Square Feet	Standard Roadside Construction Signs, 10 Square Feet or More
0860	619-G4005		72	Linear Feet	Barricades, Type III, Single Faced
0870	619-G7001		8	Each	Warning Lights, Type "B"
0880	620-A001		1	Lump Sum	Mobilization
0890	629-A005		1	Each	Vehicular Impact Attenuator, 70 MPH
0900	630-A001		642	Square Feet	Standard Roadside Signs, Sheet Aluminum, 0.080" Thickness
0910	630-A003		4,001	Square Feet	Standard Roadside Signs, Sheet Aluminum, 0.125" Thickness
0920	630-C001		883	Linear Feet	Square Tube Posts, 4.0 lb/ft
0930	630-C005		6,552	Linear Feet	Square Tube Posts, 2.0 lb/ft
0940	630-E005		250	Pounds	Structural Steel Angles & Bars, Aluminum Unistrut
0950	630-F006		115	Each	Delineators, Guard Rail, White
0960	630-F007		88	Each	Delineators, Guard Rail, Yellow

Line No.	Item Code	Adj Code	Quantity	Units	Description [Fixed Unit Price]
0970	630-G005		26	Each	Type 3 Object Markers, OM-3R or OM-3L, Post Mounted
0980	635-A059		24	Each	Traffic Signal Head, Type 1
0990	635-A060		12	Each	Traffic Signal Head, Type 1A
1000	635-A061		18	Each	Traffic Signal Head, Type 2
1010	635-A063		18	Each	Traffic Signal Head, Type 2R
1020	635-A069		6	Each	Traffic Signal Head, Type 2U
1030	638-A003		12	Each	Flashing Assembly, Be Prepared to Stop When Flashing
1040	647-A001		1	Lump Sum	Removal of Existing Traffic Signal Equipment
1050	682-A039		6,350	Linear Feet	Underground Branch Circuit, AWG 8, 3 Conductor
1060	682-D003		46	Each	Underground Pull Box
1070	682-E002		10	Each	Underground Junction Box
1080	682-F001		1	Each	Secondary Power Controller
1090	683-B005		46	Each	Lighting Assembly, Low Mast, LED, Type 40-1-8-213
1100	684-A003		48	Cubic Yard	Pole Foundation, 24" Diameter
1110	685-D001		1	Each	Service Pole
1120	699-A001		1	Lump Sum	Roadway Construction Stakes
1130	815-A007	(S)	279	Ton	Loose Riprap, Size 300
1140	815-E001	(S)	370	Square Yard	Geotextile under Riprap
1150	815-F002	(S)	108	Ton	Sediment Control Stone
1160	907-234-A001		57,820	Linear Feet	Temporary Silt Fence
1170	907-234-D001		125	Each	Inlet Siltation Guard
1180	907-234-E001		125	Each	Reset Inlet Siltation Guard
1190	907-403-A002	(BA1)	28,611	Ton	12.5-mm, MT, Asphalt Pavement
1200	907-403-A005	(BA1)	26,048	Ton	19-mm, MT, Asphalt Pavement
1210	907-403-A006	(BA1)	31,947	Ton	19-mm, ST, Asphalt Pavement
1220	907-403-A013	(BA1)	64,775	Ton	9.5-mm, HT, Asphalt Pavement
1230	907-403-A014	(BA1)	22,595	Ton	9.5-mm, MT, Asphalt Pavement
1240	907-403-A015	(BA1)	23,628	Ton	9.5-mm, ST, Asphalt Pavement
1250	907-413-E001		384	Linear Feet	Sawing and Sealing Transverse Joints in Asphalt Pavement
1260	907-420-A001		36,000	Pounds	Undersealing
1270	907-604-PP001		18	Each	Modify Existing Inlet, Per Plans
1280	907-618-A001		1	Lump Sum	Maintenance of Traffic
1290	907-618-M2001		2,000	Hours	Work Zone Law Enforcement [$60.00]

Line No.	Item Code	Adj Code	Quantity	Units	Description [Fixed Unit Price]
1300	907-619-E3001		4	Each	Changeable Message Sign
1310	907-626-A007		45	Mile	6" Thermoplastic Double Drop Traffic Stripe, Skip White
1320	907-626-C012		42	Mile	6" Thermoplastic Double Drop Edge Stripe, Continuous White
1330	907-626-C011		7,402	Linear Feet	6" Thermoplastic Double Drop Edge Stripe, Continuous White
1340	907-626-F003		38	Mile	6" Thermoplastic Double Drop Edge Stripe, Continuous Yellow
1350	907-626-E004		4,320	Linear Feet	6" Thermoplastic Double Drop Traffic Stripe, Continuous Yellow
1380	907-626-G006		362,176	Linear Feet	Thermoplastic Double Drop Detail Stripe, White
1390	907-626-G007		179,018	Linear Feet	Thermoplastic Double Drop Detail Stripe, Yellow
1400	907-626-H006		17,863	Square Feet	Thermoplastic Double Drop Legend, White
1410	907-626-H007		9,515	Linear Feet	Thermoplastic Double Drop Legend, White
1440	907-627-J001		177	Each	Two-Way Clear Reflective High Performance Raised Markers
1450	907-627-K001		12,317	Each	Red-Clear Reflective High Performance Raised Markers
1460	907-627-L001		2,372	Each	Two-Way Yellow Reflective High Performance Raised Markers
1470	907-627-M001		800	Each	One-Way Clear Reflective High Performance Raised Markers
1480	907-627-N001		800	Each	One-Way Yellow Reflective High Performance Raised Markers
1490	907-628-G003		1,146	Linear Feet	6" High Performance Cold Plastic Traffic Stripe, Skip White
1500	907-628-H005		6,027	Linear Feet	6" High Performance Cold Plastic Traffic Stripe, Continuous White
1510	907-628-J003		6,027	Linear Feet	6" High Performance Cold Plastic Traffic Stripe, Continuous Yellow
1520	907-630-PP002		228	Square Feet	Roadside Directional Signs, Sheet Aluminum, 0.125" Thickness, Ground Mounted
1530	907-632-A007		6	Each	Solid State Traffic Cabinet Assembly, Type III Cabinet, Type 1 Controller
1540	907-632-J001		6	Each	Power Service Pedestal
1550	907-634-A041		1	Each	Traffic Signal Equipment Pole, Type II(L), 30' Shaft, 25' Arm
1560	907-634-A042		2	Each	Traffic Signal Equipment Pole, Type II(L), 30' Shaft, 30' Arm
1570	907-634-A043		1	Each	Traffic Signal Equipment Pole, Type II(L), 30' Shaft, 35' Arm
1580	907-634-A044		4	Each	Traffic Signal Equipment Pole, Type II(L), 30' Shaft, 40' Arm
1590	907-634-A045		2	Each	Traffic Signal Equipment Pole, Type II(L), 30' Shaft, 45' Arm
1600	907-634-A224		1	Each	Traffic Signal Equipment Pole, Type III(L), 30' Shaft, 25' & 45' Arm
1610	907-634-A226		2	Each	Traffic Signal Equipment Pole, Type III(L), 30' Shaft, 25' & 55' Arm
1620	907-634-A227		1	Each	Traffic Signal Equipment Pole, Type III(L), 30' Shaft, 25' & 60' Arm
1630	907-634-A230		1	Each	Traffic Signal Equipment Pole, Type III(L), 30' Shaft, 30' & 40' Arm
1640	907-634-A232		1	Each	Traffic Signal Equipment Pole, Type III(L), 30' Shaft, 30' & 50' Arm
1650	907-634-A254		1	Each	Traffic Signal Equipment Pole, Type III(L), 30' Shaft, 40' & 40' Arm
1660	907-634-A426		2	Each	Traffic Signal Equipment Pole, Type III, 30' Shaft, 25' & 55' Arm

Line No.	Item Code	Adj Code	Quantity	Units	Description [Fixed Unit Price]
1670	907-634-A539		16	Each	Traffic Signal Equipment Pole, Type V, 10' Shaft
1680	907-634-B001		3	Each	Traffic Signal Equipment Pole Shaft Extension, 10'
1690	907-634-C002		84	Cubic Yard	Pole Foundations, Class "DS" Concrete
1700	907-634-D003		285	Linear Feet	Slip Casing, 36" Diameter
1710	907-636-B003		6,818	Linear Feet	Electric Cable, Underground in Conduit, IMSA 20-1, AWG 10, 2 Conductor
1720	907-636-B013		9,496	Linear Feet	Electric Cable, Underground in Conduit, IMSA 20-1, AWG 14, 4 Conductor
1730	907-636-B016		31,041	Linear Feet	Electric Cable, Underground in Conduit, IMSA 20-1, AWG 14, 8 Conductor
1740	907-636-B028		1,827	Linear Feet	Electric Cable, Underground in Conduit, IMSA 20-1, AWG 8, 3 Conductor
1750	907-636-B040		3,137	Linear Feet	Electric Cable, Underground in Conduit, THHN, AWG #12, 3 Conductor
1760	907-637-A002		53	Each	Pullbox Enclosure, Type 2
1770	907-637-A003		9	Each	Pullbox Enclosure, Type 3
1780	907-637-C028		13,534	Linear Feet	Traffic Signal Conduit, Underground, Type 4, 2"
1790	907-637-C030		5,201	Linear Feet	Traffic Signal Conduit, Underground, Type 4, 3"
1800	907-637-D003		3,426	Linear Feet	Traffic Signal Conduit, Underground Drilled or Jacked, Rolled Pipe, 3"
1810	907-637-D009		1,160	Linear Feet	Traffic Signal Conduit, Underground Drilled or Jacked, Type 4, 2"
1820	907-641-A002		24	Each	Signal Stop Bar Radar Vehicle Detection Sensor, Type 2
1830	907-641-B002		6	Each	Signal Advanced Radar Vehicle Detection Sensor, Type 2
1840	907-641-D001		18,614	Linear Feet	Radar Vehicle Detection Cable
1850	907-641-F002		6	Each	Signal Radar Vehicle Detection Processor, Type 2
1860	907-650-A002		2	Each	On Street Video Equipment, Fixed Type
1870	907-650-A003		2	Each	On Street Video Equipment, PTZ Type
1880	907-650-A004		3	Each	On Street Video Equipment, PTZ Type, Signal Monitoring
1890	907-653-A001		351	Square Feet	Traffic Sign
1900	907-653-B001		150	Square Feet	Street Name Sign
1910	907-659-A001		1	Lump Sum	Traffic Management Center Modifications
1912	907-661-B002		3,403	Linear Feet	Fiber Optic Drop Cable, 12 SM
1914	907-663-A002		3	Each	Network Switch, Type B
1920	907-662-D001		2	Each	Radio Interconnect, Broadband, Long Range
1930	907-662-D002		3	Each	Radio Interconnect, Broadband, Short Range
1940	907-663-A006		2	Each	Network Switch, Type F
1950	907-672-A003		5	Each	Remove and Reset Traffic Signal Equipment
1960	907-906001		520	Hours	Trainees [$5.00]

ALTERNATE GROUP AA NUMBER 1

Line No.	Item Code	Adj Code	Quantity	Units	Description [Fixed Unit Price]
1970	304-F001	(GT)	220,607	Ton	3/4" and Down Crushed Stone Base
			ALTERNATE GROUP AA NUMBER 2		
1980	304-F002	(GT)	220,607	Ton	Size 610 Crushed Stone Base
			ALTERNATE GROUP AA NUMBER 3		
1990	304-F003	(GT)	220,607	Ton	Size 825B Crushed Stone Base

ADDENDUM

	SUMMARY OF REVISIONS						
REV. NO.	DATE	1st ORDER	ADDENDUM	2nd ORDER	BY	SHEET ID	DESCRIPTION
	06/17/2025	X			TWB	1	ADDED EXTERNAL DETAIL FOR 108634/301100 & 301200 (NHPP-0064-01(038)).
	06/17/2025	X			TWB	2	UPDATED SUMMARY OF REVISIONS SHEET.
	06/17/2025	X			TWB	3-6	ADDED SUMMARY OF QUANTITIES SHEET FOR 108634/301200 DETAIL AND UPDATED ALL APPLICABLE ROADWAY SHEET NUMBERS AND TOTALS.
	06/17/2025	X			TWB	9-12, 14-17	REMOVED PAVEMENT MARKING LEGEND SYMBOL AND DIRECTION ARROW.
	06/17/2025	X			TWB	21, 26	ADDED PAY ITEM 202-A001 AND REMOVED A FOOTNOTE ON PAY ITEM 202-B179.
1	06/17/2025	X			TWB	21-28, 28.1, 28.2	ADDED SUMMARY OF QUANTITIES SHEET FOR 108634/301200 DETAIL AND UPDATED SHEETS TO REVISE NECESSARY PAY ITEMS, QUANTITIES, AND TOTALS. REVISED TITLE BLOCK FOR CORRECT FMS AND PROJECT NUMBERS. REVISED WHITE LEGEND AND DETAIL STRIPING QUANTITY FOR 301100 DETAIL.
	06/17/2025	X			TWB	36	REVISED WHITE LEGEND AND DETAIL STRIPING QUANTITY FOR 301100 DETAIL.
	06/17/2025	X			CEM	36, 309-333	REMOVED PAVEMENT MARKING LEGEND AS NECESSARY AND UPDATED ASSOCIATED QUANTITY.
	06/17/2025	X			TWB	357, 391	REMOVED FOOTNOTE.
	06/17/2025	X			CEM	1001-1025, 2001-2006	REMOVED PAVEMENT MARKING LEGEND AS NECESSARY.
	06/17/2025	X			JKS	4003	REMOVED PAVEMENT MARKING LEGEND AS NECESSARY.
	07/23/2025		X		TWB	2	UPDATED SUMMARY OF REVISIONS SHEET.
	07/23/2025		X		TWB	11-13	REVISED OR ADDED OUTSIDE LOON DETAIL AND INCLUDED CORRESPONDING FOOTNOTE.
2	07/23/2025		X		TWB	23, 24, 28.1, 28.2	ADDED PAY ITEMS 907-661-B002 AND 907-663-A002 AND UPDATED QUANTITIES FOR MODIFIED PHASING AND RADIO INTERCONNECT UPDATES. REVISED FOOTNOTE FOR PAY ITEM 907-663-A006.
	07/23/2025		X		MDOT	25-27	ADDED PAY ITEM 202-B240 AND REVISED QUANTITY FOR PAY ITEM 907-403-A015.
	07/23/2025		X		CEM	40, 2001-2006	REVISED PLANS AND UPDATED QUANTITIES FOR MODIFIED PHASING AND RADIO INTERCONNECT UPDATES.

07/23/25 ROADWAY — 06/17/25 STRUCTURES — 07/23/25 TRAFFIC — 06/17/25 LIGHTING

MISSISSIPPI DEPARTMENT OF TRANSPORTATION

DESIGNED BY: GARVER
DETAILED BY: RDL IV
CHECKED BY: TWB
DATE: JUL 2025

FMS CON: 108634/301000, 301100, & 301200
PROJECT NO.: HSIP-0064-01(038) NHPP-0064-01(038)
COUNTY: HARRISON

SUMMARY OF REVISIONS

SHEET ID REV-1

SHEET NO. 2

PLAN SHEET

DATE 4:56:56 PM REV.dgn

ADDENDUM

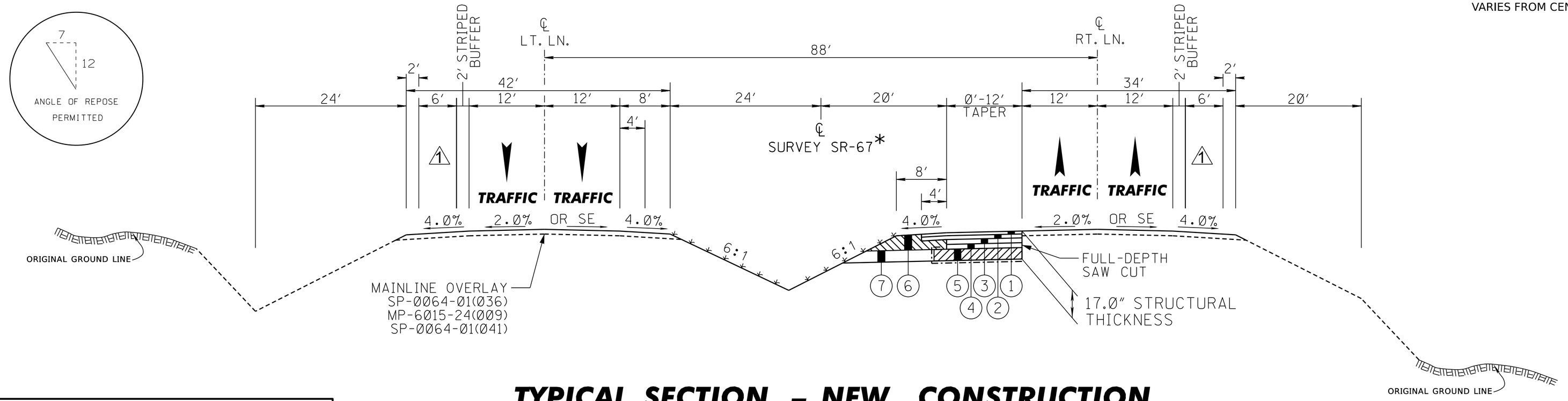

* CENTERLINE SURVEY LOCATION VARIES FROM CENTERLINE MEDIAN

TYPICAL SECTION – NEW CONSTRUCTION

NORTHBOUND SR 67 MUT WITHIN TAPER LIMITS

STA. 90+73.98 - STA. 93+53.22
STA. 223+62.81 - STA. 227+40.73
STA. 279+21.86 - STA. 283+00.98
STA. 334+50.88 - STA. 338+30.00
STA. 388+43.37 - STA. 392+22.50
STA. 457+48.87 - STA. 461+29.59
STA. 516+98.39 - STA. 520+77.51
STA. 586+85.77 - STA. 590+79.89
STA. 699+70.40 - STA. 703+50.73
STA. 790+65.01 - STA. 794+44.14
STA. 871+98.39 - STA. 875+76.74
STA. 954+70.47 - STA. 958+50.75
STA. 1015+51.00 - STA. 1019+29.02
STA. 1080+97.67 - STA. 1084+76.79
STA. 140+20.50 - STA. 143+99.63
STA. 241+78.97 - STA. 245+58.10
STA. 295+61.78 - STA. 299+53.51
STA. 355+08.11 - STA. 358+87.23
STA. 419+98.91 - STA. 424+98.03
STA. 478+59.28 - STA. 482+38.39
STA. 543+09.68 - STA. 546+93.80
STA. 668+36.88 - STA. 672+16.01
STA. 722+60.93 - STA. 726+40.93
STA. 822+85.80 - STA. 826+64.93
STA. 899+05.00 - STA. 902+84.12
STA. 982+98.37 - STA. 986+79.16
STA. 1034+24.98 - STA. 1038+3.94
STA. 1108+36.66 - STA. 1112+15.78
STA. 203+51.84 - STA. 207+29.77
STA. 259+73.26 - STA. 263+52.38
STA. 313+50.88 - STA. 317+30.00
STA. 371+53.24 - STA. 375+32.35
STA. 438+35.00 - STA. 442+15.26
STA. 495+50.61 - STA. 499+29.73
STA. 561+51.69 - STA. 565+30.07
STA. 682+39.27 - STA. 686+19.48
STA. 750+98.79 - STA. 754+76.93
STA. 851+12.04 - STA. 854+91.16
STA. 925+20.58 - STA. 929+00.72
STA. 999+84.12 - STA. 1003+63.24
STA. 1058+59.81 - STA. 1062+48.93

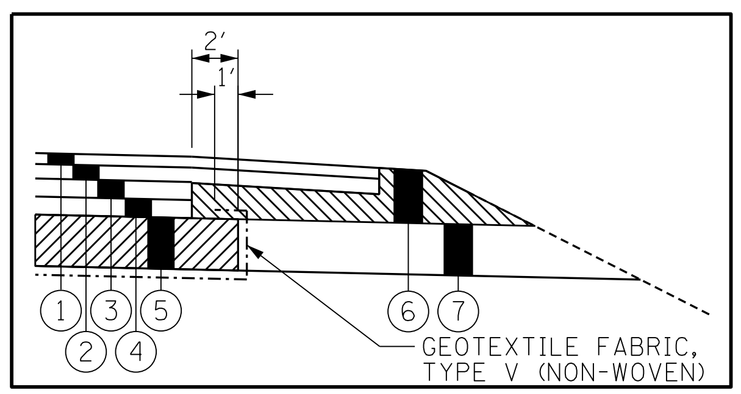

GEOTEXTILE FABRIC DETAIL

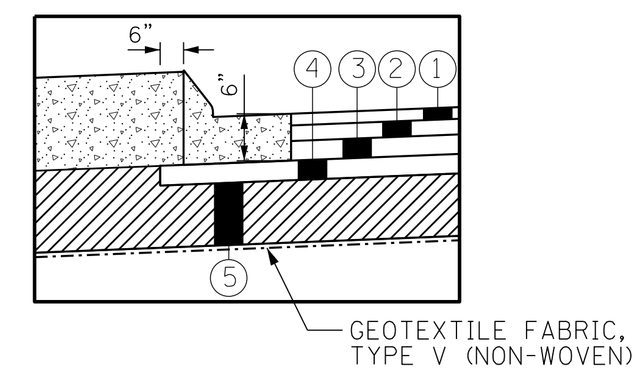

TYPE 2 C & G & GUTTER DETAIL

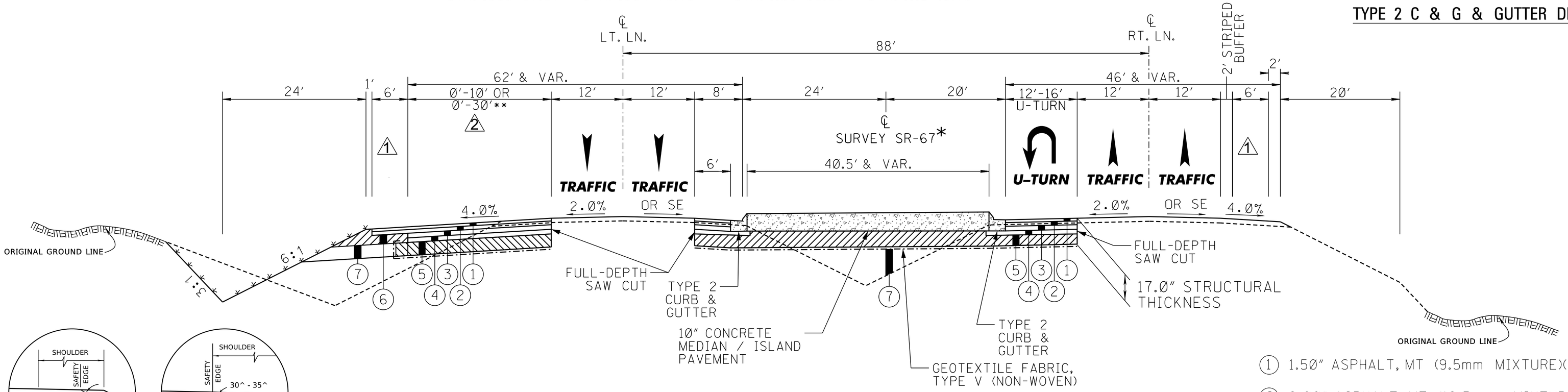

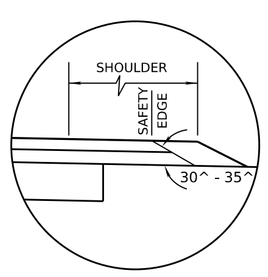

SAFETY EDGE REQ'D
2 LIFTS ONLY
(NOT A PAY ITEM)
NEW CONSTRUCTION
FULL-WIDTH PAVED

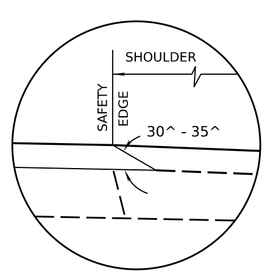

SAFETY EDGE REQ'D
(NOT A PAY ITEM)
OVERLAY 11' OR 12' PAV'MT.
WITHOUT TRENCH

** SEE INTERSECTION DETAIL SHEETS FOR ADDITIONAL INFORMATION INCLUDING TYPE (10' STANDARD OR 30' BULB OUT) AND LOCATION OF OUTSIDE LOON WHERE APPLICABLE.

TYPICAL SECTION – NEW CONSTRUCTION

NORTHBOUND SR 67 MUT WITHIN ISLAND LIMITS WITH OUTSIDE LOON**

STA. 94+11.88
STA. 565+90.60
STA. 726+96.58
STA. 876+32.05
STA. 959+06.48
STA. 144+55.57
STA. 591+41.10
STA. 794+98.50
STA. 903+39.54
STA. 1038+59.51
STA. 425+52.30
STA. 704+06.47
STA. 827+19.75
STA. 929+56.47
STA. 1085+32.20

1. 1.50" ASPHALT, MT (9.5mm MIXTURE)(1 @ 1.5")
2. 2.00" ASPHALT, MT (12.5 mm MIXTURE)(1 @ 2")
3. 2.50" ASPHALT, MT (19 mm MIXTURE)(1 @ 2.50")
4. 3.00" ASPHALT, ST (19 mm MIXTURE)(1 @ 3.00")
5. 8.00" & VAR. CRUSHED STONE W/ GEOTEXTILE FABRIC, TYPE V (NON-WOVEN)
6. 9.00" & VAR. CRUSHED STONE SHOULDER
7. FILL MATERIAL

INDICATES AREA TO BE TREATED IN ACCORDANCE WITH THE VEGETATION SCHEDULE. SEE WK. SH. NO. VS-1

TRAVIS WAYNE BLACK LICENSED PROFESSIONAL ENGINEER 19727 STATE OF MISSISSIPPI
07/23/25

MDOT MISSISSIPPI DEPARTMENT OF TRANSPORTATION

DESIGNED BY: GARVER
DETAILED BY: RDL IV
CHECKED BY: TWB
DATE: JUL 2025

FMS CON: 108634/301000
PROJECT NO.: HSIP-0064-01(038)
COUNTY: HARRISON

TYPICAL SECTIONS
SR 67
NORTHBOUND MUT TAPER & ISLAND W/ 10' OUTSIDE LOON

SHEET ID
TS-3

SHEET NO.
11

PLAN SHEET
DATE 4:57:15 PM TS.dgn

ADDENDUM

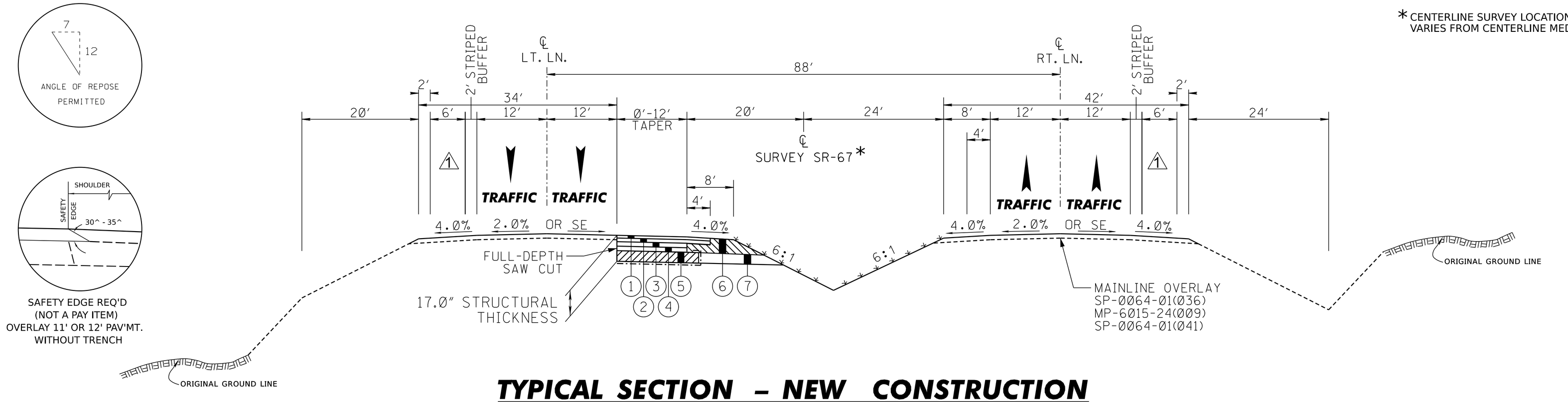

* CENTERLINE SURVEY LOCATION VARIES FROM CENTERLINE MEDIAN

TYPICAL SECTION – NEW CONSTRUCTION

SOUTHBOUND SR 67 MUT WITHIN TAPER LIMITS

STA. 125+68.00 - STA. 128+35.12
STA. 228+80.67 - STA. 232+60.66
STA. 284+40.99 - STA. 288+20.11
STA. 339+70.00 - STA. 343+59.12
STA. 393+62.50 - STA. 397+41.62
STA. 462+70.06 - STA. 466+49.21
STA. 522+17.49 - STA. 525+96.61
STA. 650+76.05 - STA. 654+56.60
STA. 733+48.94 - STA. 737+28.03
STA. 805+64.01 - STA. 809+43.14
STA. 881+99.03 - STA. 885+78.89
STA. 967+61.10 - STA. 971+40.02
STA. 1021+68.94 - STA. 1024+49.53
STA. 1095+85.59 - STA. 1099+64.71

STA. 188+19.81 - STA. 191+99.84
STA. 246+98.10 - STA. 250+77.22
STA. 300+95.44 - STA. 304+91.31
STA. 360+27.23 - STA. 364+6.36
STA. 428+13.84 - STA. 431+93.59
STA. 483+78.38 - STA. 487+57.50
STA. 548+33.79 - STA. 552+12.91
STA. 673+56.00 - STA. 677+34.66
STA. 756+17.01 - STA. 759+97.20
STA. 837+99.00 - STA. 841+78.13
STA. 908+45.00 - STA. 912+24.12
STA. 988+19.17 - STA. 991+97.08
STA. 1043+31.65 - STA. 1047+17.25

STA. 208+69.73 - STA. 212+49.74
STA. 264+92.38 - STA. 268+71.51
STA. 318+70.00 - STA. 322+49.12
STA. 376+72.31 - STA. 380+51.42
STA. 443+55.65 - STA. 450+00.05
STA. 500+69.72 - STA. 504+48.84
STA. 573+45.00 - STA. 577+24.37
STA. 687+59.56 - STA. 691+42.68
STA. 776+01.94 - STA. 779+82.09
STA. 856+31.17 - STA. 860+10.30
STA. 942+27.74 - STA. 946+05.93
STA. 1005+03.24 - STA. 1008+82.36
STA. 1063+88.93 - STA. 1067+68.05

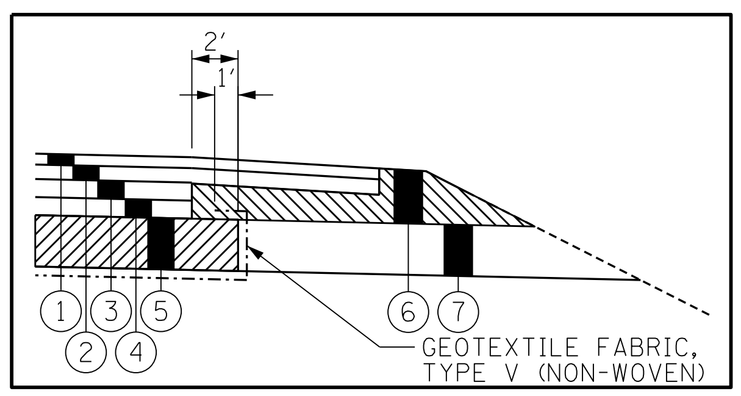

GEOTEXTILE FABRIC DETAIL

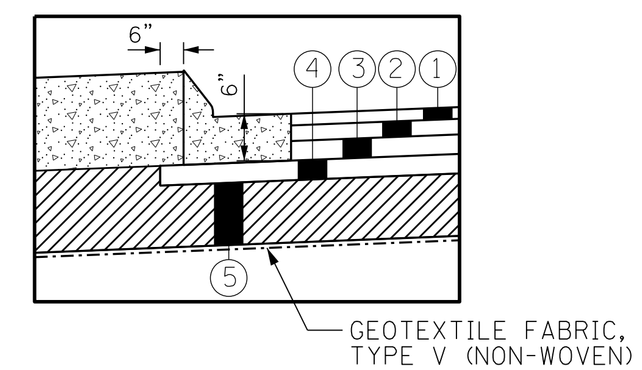

TYPE 2 C & G & GUTTER DETAIL

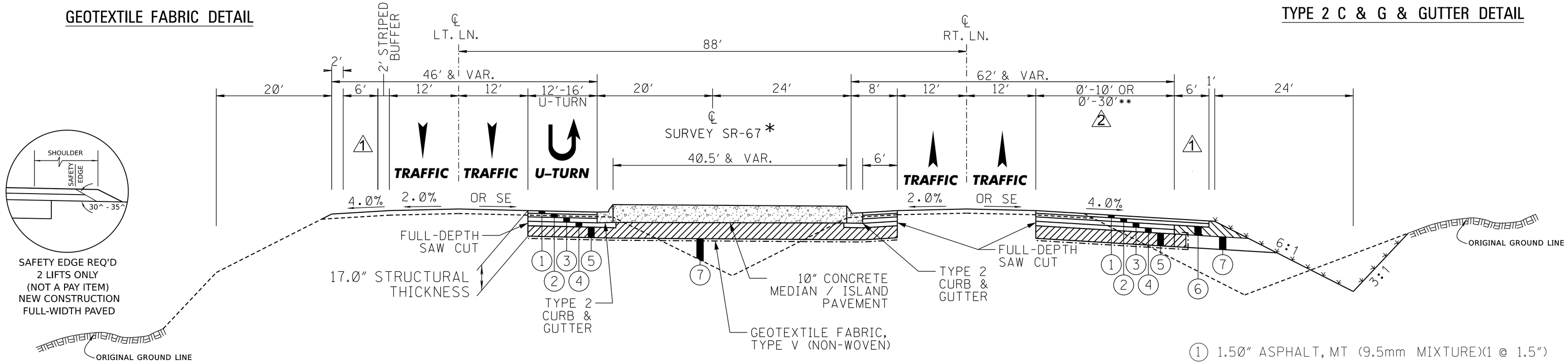

TYPICAL SECTION – NEW CONSTRUCTION

SOUTHBOUND SR 67 MUT WITHIN ISLAND LIMITS WITH OUTSIDE LOON** 2

STA. 125+18.68
STA. 573+08.06
STA. 775+47.00
STA. 881+45.94
STA. 967+07.89

STA. 187+66.81
STA. 650+22.19
STA. 805+09.91
STA. 907+91.99
STA. 1042+78.88

STA. 427+59.32
STA. 732+95.49
STA. 837+45.46
STA. 941+75.06
STA. 1095+32.58

2

** SEE INTERSECTION DETAIL SHEETS FOR ADDITIONAL INFORMATION INCLUDING TYPE (10' STANDARD OR 30' BULB OUT) AND LOCATION OF OUTSIDE LOON WHERE APPLICABLE.

INDICATES AREA TO BE TREATED IN ACCORDANCE WITH THE VEGETATION SCHEDULE. SEE WK. SH. NO. VS-1

1. 1.50" ASPHALT, MT (9.5mm MIXTURE)(1 @ 1.5")
2. 2.00" ASPHALT, MT (12.5 mm MIXTURE)(1 @ 2")
3. 2.50" ASPHALT, MT (19 mm MIXTURE)(1 @ 2.50")
4. 3.00" ASPHALT, ST (19 mm MIXTURE)(1 @ 3.00")
5. 8.00" & VAR. CRUSHED STONE W/ GEOTEXTILE FABRIC, TYPE V (NON-WOVEN)
6. 9.00" & VAR. CRUSHED STONE SHOULDER
7. FILL MATERIAL

TRAVIS WAYNE BLACK LICENSED PROFESSIONAL ENGINEER 19727 STATE OF MISSISSIPPI
07/23/25

MDOT MISSISSIPPI DEPARTMENT OF TRANSPORTATION

DESIGNED BY: GARVER
DETAILED BY: RDL IV
CHECKED BY: TWB
DATE: JUL 2025

FMS CON: 108634/301000
PROJECT NO.: HSIP-0064-01(038)
COUNTY: HARRISON

TYPICAL SECTIONS
SR 67
SOUTHBOUND MUT TAPER &
ISLAND W/ 30' BULB OUT LOON

SHEET ID
TS-4

SHEET NO.
12

PLAN SHEET
DATE 4:57:16 PM TS.dgn

ADDENDUM

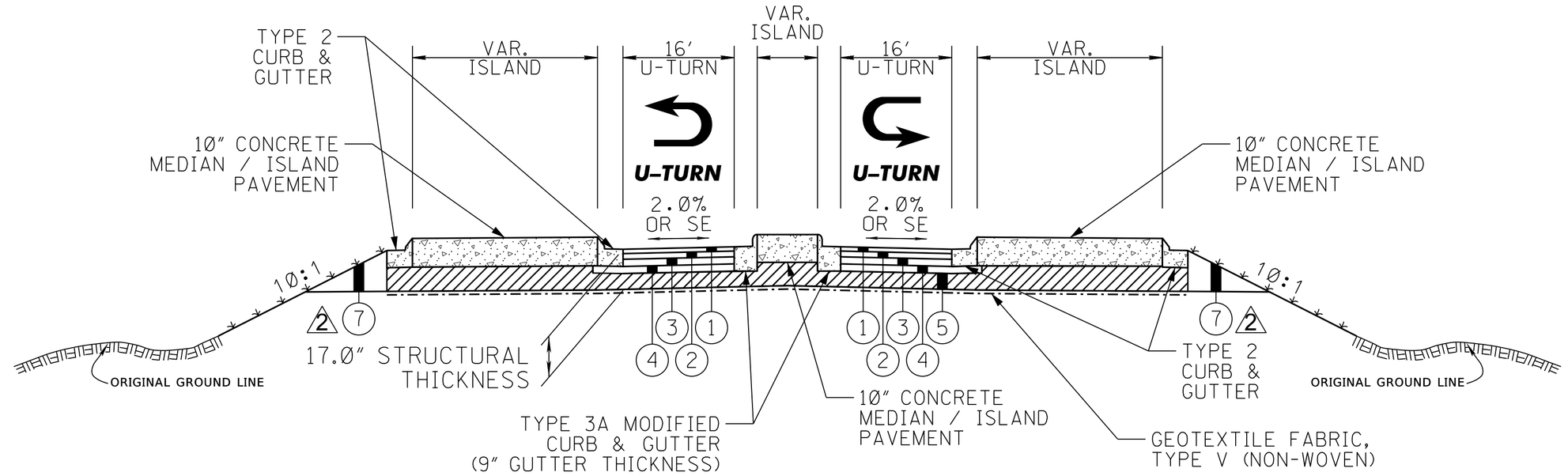

2 * SEE INTERSECTION DETAIL SHEETS FOR ADDITIONAL INFORMATION INCLUDING TYPE (10' STANDARD) AND LOCATION OF OUTSIDE LOON WHERE APPLICABLE.

TYPICAL SECTION – NEW CONSTRUCTION

NORTHBOUND & SOUTHBOUND SR 67 MUT WITHIN ISLAND LIMITS (SEE SECTION A–A)

STA. 208+01.82	STA. 228+13.01	STA. 246+15.05
STA. 264+09.55	STA. 283+73.65	STA. 300+24.85
STA. 318+0.93	STA. 339+00.93	STA. 359+58.16
STA. 376+2.75	STA. 392+92.50	STA. 442+89.10
STA. 462+08.17	STA. 483+16.94	STA. 500+7.99
STA. 521+55.39	STA. 547+71.25	STA. 672+86.01
STA. 686+90.18	STA. 755+46.02	STA. 855+61.91
STA. 987+49.84	STA. 1004+34.17	STA. 1020+0.16
STA. 1063+19.86		

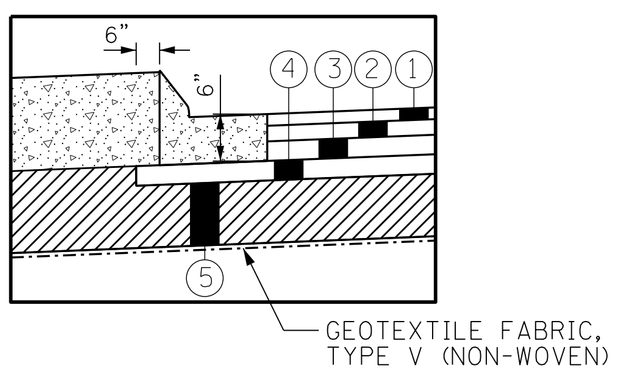

TYPE 2 C & G & GUTTER DETAIL

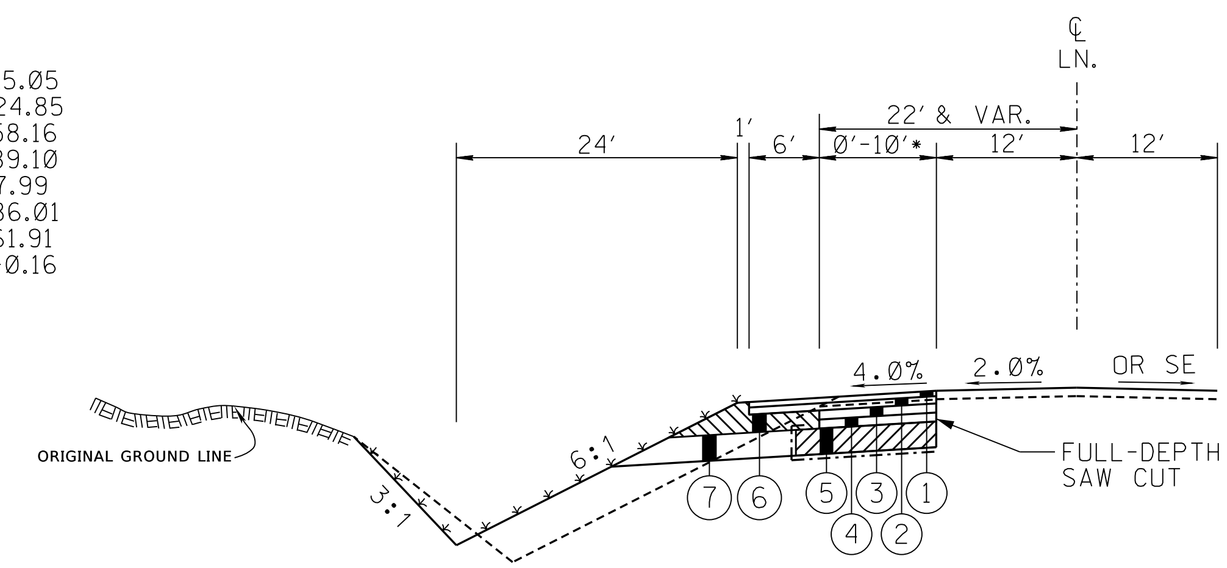

OUTSIDE LOON DETAIL

2

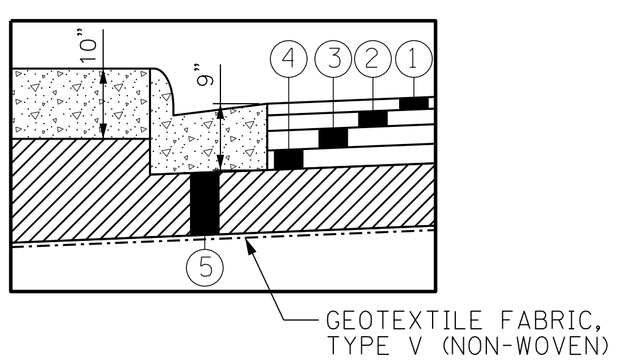

TYPE 3A MODIFIED C & G & GUTTER DETAIL

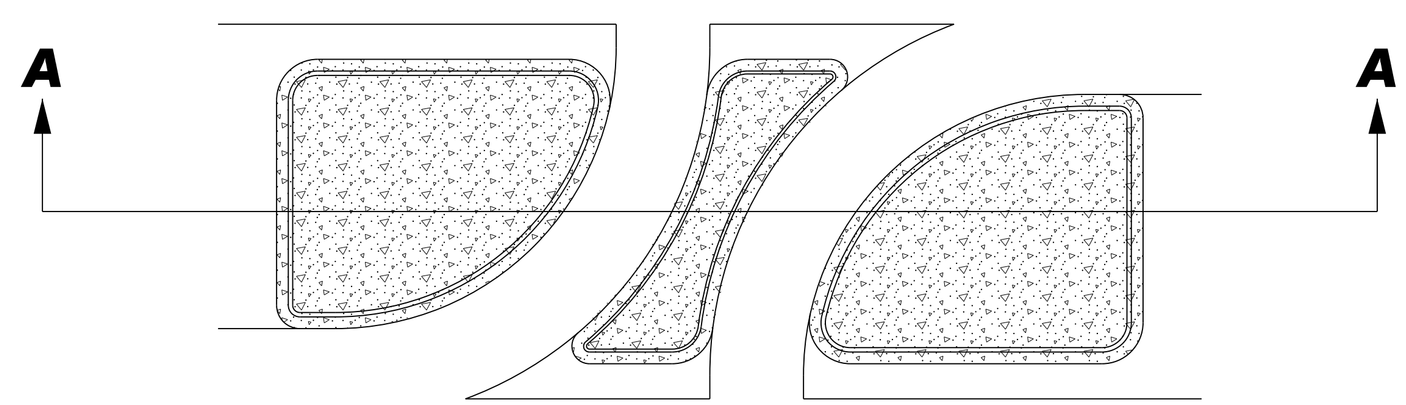

SECTION A–A

MUT DETAIL

1. 1.50″ ASPHALT, MT (9.5mm MIXTURE)(1 @ 1.5″)
2. 2.00″ ASPHALT, MT (12.5 mm MIXTURE)(1 @ 2″)
3. 2.50″ ASPHALT, MT (19 mm MIXTURE)(1 @ 2.50″)
4. 3.00″ ASPHALT, ST (19 mm MIXTURE)(1 @ 3.00″)
5. 8.00″ & VAR. CRUSHED STONE W/ GEOTEXTILE FABRIC, TYPE V (NON-WOVEN)
6. 2 9.00″ & VAR. CRUSHED STONE SHOULDER
7. 2 FILL MATERIAL

INDICATES AREA TO BE TREATED IN ACCORDANCE WITH THE VEGETATION SCHEDULE. SEE WK. SH. NO. VS-1

PLAN SHEET

DATE 4:57:17 PM TS.dgn

TRAVIS WAYNE BLACK LICENSED PROFESSIONAL ENGINEER 19727 STATE OF MISSISSIPPI
07/23/25

MDOT MISSISSIPPI DEPARTMENT OF TRANSPORTATION

DESIGNED BY: GARVER
DETAILED BY: RDL IV
CHECKED BY: TWB
DATE: JUL 2025

FMS CON: 108634/301000
PROJECT NO.: HSIP-0064-01(038)
COUNTY: HARRISON

TYPICAL SECTIONS
SR 67
NORTHBOUND & SOUTHBOUND MUT DETAIL

SHEET ID TS-5

SHEET NO. 13

ADDENDUM

SUMMARY OF QUANTITIES (SHEET 4)

PAY ITEM NO.	PAY ITEM	UNIT	HARRISON : 108634-301100 Prelim	Final	
907-626-G007	Thermoplastic Double Drop Detail Stripe, Yellow	LF	89,243		
907-626-H006	Thermoplastic Double Drop Legend, White	SF	14,700		1
907-626-H007	Thermoplastic Double Drop Legend, White	LF	4,320		
907-627-J001	Two-Way Clear Reflective High Performance Raised Markers	EA	27		
907-627-K001	Red-Clear Reflective High Performance Raised Markers	EA	5,760		
907-627-L001	Two-Way Yellow Reflective High Performance Raised Markers	EA	104		
630-A001	Standard Roadside Signs, Sheet Aluminum, 0.080" Thickness	SF	642		
630-A003	Standard Roadside Signs, Sheet Aluminum, 0.125" Thickness	SF	4,001		
630-C001	Square Tube Posts, 4.0 lb/ft	LF	883		
630-C005	Square Tube Posts, 2.0 lb/ft	LF	6,552		
630-E005	Structural Steel Angles & Bars, Aluminum Unistrut	LBS	250		
907-630-PP002	Roadside Directional Signs, Sheet Aluminum, 0.125" Thickness, Ground Mounted	SF	228		
907-632-A007	Solid State Traffic Cabinet Assembly, Type III Cabinet, Type 1 Controller	EA	6		
907-632-J001	Power Service Pedestal	EA	6		
907-634-A041	Traffic Signal Equipment Pole, Type II(L), 30' Shaft, 25' Arm	EA	1		
907-634-A042	Traffic Signal Equipment Pole, Type II(L), 30' Shaft, 30' Arm	EA	2		
907-634-A043	Traffic Signal Equipment Pole, Type II(L), 30' Shaft, 35' Arm	EA	1		
907-634-A044	Traffic Signal Equipment Pole, Type II(L), 30' Shaft, 40' Arm	EA	4		
907-634-A045	Traffic Signal Equipment Pole, Type II(L), 30' Shaft, 45' Arm	EA	2		
907-634-A224	Traffic Signal Equipment Pole, Type III(L), 30' Shaft, 25' & 45' Arm	EA	1		
907-634-A226	Traffic Signal Equipment Pole, Type III(L), 30' Shaft, 25' & 55' Arm	EA	2		
907-634-A227	Traffic Signal Equipment Pole, Type III(L), 30' Shaft, 25' & 60' Arm	EA	1		
907-634-A230	Traffic Signal Equipment Pole, Type III(L), 30' Shaft, 30' & 40' Arm	EA	1		
907-634-A232	Traffic Signal Equipment Pole, Type III(L), 30' Shaft, 30' & 50' Arm	EA	1		
907-634-A254	Traffic Signal Equipment Pole, Type III(L), 30' Shaft, 40' & 40' Arm	EA	1		
907-634-A426	Traffic Signal Equipment Pole, Type III, 30' Shaft, 25' & 55' Arm	EA	2		
907-634-A539	Traffic Signal Equipment Pole, Type V, 10' Shaft	EA	16		
907-634-B001	Traffic Signal Equipment Pole Shaft Extension, 10'	EA	3		2
907-634-C002	Pole Foundations, Class "DS" Concrete	CY	84		
907-634-D003	Slip Casing, 36" Diameter	LF	285		
635-A059	Traffic Signal Head, Type 1	EA	24		2
635-A060	Traffic Signal Head, Type 1A	EA	12		
635-A061	Traffic Signal Head, Type 2	EA	18		
635-A063	Traffic Signal Head, Type 2R	EA	18		2
635-A069	Traffic Signal Head, Type 2U	EA	6		2
907-636-B003	Electric Cable, Underground in Conduit, IMSA 20-1, AWG 10, 2 Conductor	LF	6,818		3 6
907-636-B013	Electric Cable, Underground in Conduit, IMSA 20-1, AWG 14, 4 Conductor	LF	9,496		3
907-636-B016	Electric Cable, Underground in Conduit, IMSA 20-1, AWG 14, 8 Conductor	LF	31,041		3
907-636-B028	Electric Cable, Underground in Conduit, IMSA 20-1, AWG 8, 3 Conductor	LF	1,827		3 7
907-636-B040	Electric Cable, Underground in Conduit, THHN, AWG #12, 3 Conductor	LF	3,137		1 3
907-637-A002	Pullbox Enclosure, Type 2	EA	53		
907-637-A003	Pullbox Enclosure, Type 3	EA	9		
907-637-C028	Traffic Signal Conduit, Underground, Type 4, 2"	LF	13,534		4
907-637-C030	Traffic Signal Conduit, Underground, Type 4, 3"	LF	5,201		2
907-637-D003	Traffic Signal Conduit, Underground Drilled or Jacked, Rolled Pipe, 3"	LF	3,426		
907-637-D009	Traffic Signal Conduit, Underground Drilled or Jacked, Type 4, 2"	LF	1,160		5

1. To be used for radar detector power at the u-turn intersections in conjunction with radar detector cable.
2. Traffic signal heads shall be reflectorized as per TSD-2.
3. Includes all cabling in conduit, mast arms, and poles.
4. Includes 7,714 LF for Traffic Signal Conduit and 5,820 LF for Lighting Conduit
5. For Lighting Conduit
6. To be used for luminaire cabling denoted as "LUM" on traffic signal plan sheets.
7. To be used for power cabling denoted as "POW" on traffic signal plan sheets.

TRAVIS WAYNE BLACK LICENSED PROFESSIONAL ENGINEER 19727 STATE OF MISSISSIPPI
07/23/25

MDOT MISSISSIPPI DEPARTMENT OF TRANSPORTATION

DESIGNED BY: GARVER
DETAILED BY: RDL IV
CHECKED BY: TWB
DATE: JUL 2025

FMS CON: 108634/301100
PROJECT NO.: NHPP-0064-01(038)
COUNTY: HARRISON

SUMMARY OF QUANTITIES 1

SHEET ID SQ-4

SHEET NO. 23

PLAN SHEET

DATE 4:57:25 PM SQ.dgn

ADDENDUM

SUMMARY OF QUANTITIES (SHEET 5)

PAY ITEM NO.	PAY ITEM	UNIT	HARRISON : 108634-301100		
			Prelim	Final	
638-A003	Flashing Assembly, Be Prepared to Stop When Flashing	EA	12		
907-641-A002	Signal Stop Bar Radar Vehicle Detection Sensor, Type 2	EA	24		(2) △2
907-641-B002	Signal Advanced Radar Vehicle Detection Sensor, Type 2	EA	6		(2) △2
907-641-D001	Radar Vehicle Detection Cable	LF	18,614		(3)
907-641-F002	Signal Radar Vehicle Detection Processor, Type 2	EA	6		
647-A001	Removal of Existing Traffic Signal Equipment	LS	1		(1)
907-650-A002	On Street Video Equipment, Fixed Type	EA	2		(7)
907-650-A003	On Street Video Equipment, PTZ Type	EA	2		(7)
907-650-A004	On Street Video Equipment, PTZ Type, Signal Monitoring	EA	3		(6)
907-653-A001	Traffic Sign	SF	351		
907-653-B001	Street Name Sign	SF	150		
907-659-A001	Traffic Management Center Modifications	LS	1		
907-661-B002	Fiber Optic Drop Cable, 12 SM	LF	3,403		△2
907-662-D001	Radio Interconnect, Broadband, Long Range	EA	2		(9)
907-662-D002	Radio Interconnect, Broadband, Short Range	EA	3		(8) △2
907-663-A002	Network Switch, Type B	EA	3		△2
907-663-A006	Network Switch, Type F	EA	2		(5) △2
907-672-A003	Remove and Reset Traffic Signal Equipment	EA	5		(4)
682-A039	Underground Branch Circuit, AWG 8, 3 Conductor	LF	6,350		
682-D003	Underground Pull Box	EA	46		
682-E002	Underground Junction Box	EA	10		
682-F001	Secondary Power Controller	EA	1		
683-B005	Lighting Assembly, Low Mast, LED, Type 40-1-8-213	EA	46		
684-A003	Pole Foundation, 24" Diameter	CY	48		
685-D001	Service Pole	EA	1		
699-A001	Roadway Construction Stakes	LS	1		
815-A007	Loose Riprap, Size 300	TON	279		
815-E001	Geotextile under Riprap	SY	370		
815-F002	Sediment Control Stone	TON	108		

(1) At MS 67 at Lickskillet Road, traffic signal equipment shall be salvaged to the City of Biloxi. At MS 67 at Shriners Blvd/Lamey Bridge Road, existing traffic signal cabinet and contents shall be salvaged and delivered to MDOT.

(2) The manufacturer's representative shall be on site during installation and testing and shall provide onsite training on the setup, operation, and maintenance of the system.

(3) Radar detection cable shall be size and specification as recommended by manufacturer.

(4) Remove and reset existing radio, PTZ camera, fixed camera, and pole shaft extension from existing signal pole in southwest corner to proposed Signal Pole D at MS 67 at Lickskillet Road. Remove and reset existing network switch from existing controller to proposed traffic signal controller at MS 67 at Lickskillet Road.

△2 (5) Located at both Shriner's Blvd and Traditions Parkway. Type F network switches shall be shipped to Kerby McFarland with MDOT IS Division for configuration.

(6) Cost of cabling is to be absorbed. May be relocated to a different pole at the direction of the project engineer. Camera location shall provide optimal sight distance.

(7) Located at Shriners Boulevard and Traditions Parkway. Cost of cabling is to be absorbed.

(8) Located at Shriners Boulevard and Traditions Parkway.

(9) Long Range Broadband Radio Interconnect to be installed at Maple Street Water Tower in Biloxi, MS and Lyman Communication Tower at MDOT Gulf Region Office in Lyman, MS. All cost for a complete and operable system including cable, mounting hardware, and device configuration shall be included.

TRAVIS WAYNE BLACK
LICENSED PROFESSIONAL ENGINEER
19727
STATE OF MISSISSIPPI
07/23/25

MDOT
MISSISSIPPI DEPARTMENT OF TRANSPORTATION

DESIGNED BY: GARVER
DETAILED BY: RDL IV
CHECKED BY: TWB
DATE: JUL 2025

FMS CON: 108634/301100
PROJECT NO.: NHPP-0064-01(038)
COUNTY: HARRISON

SUMMARY OF QUANTITIES △1

SHEET ID
SQ-5

SHEET NO.
24

PLAN SHEET

DATE 4:57:30 PM SQ.dgn

ADDENDUM

SUMMARY OF QUANTITIES (SHEET 6)

PAY ITEM NO.	PAY ITEM	UNIT	HARRISON : 108634-301200		
			Prelim	Final	
202-B150	Removal of Guard Rail Including Post, Blockouts & Hardware	LF	6,375		1
202-B162	Removal of Impact Attenuator	EA	1		
202-B240	Removal of Traffic Stripe	LF	13,200		2
304-F001	3/4" and Down Crushed Stone Base	TON	25,257		
	OR				
304-F002	Size 610 Crushed Stone Base	TON	25,257		
	OR				
304-F003	Size 825B Crushed Stone Base	TON	25,257		
907-403-A013	9.5-mm, HT, Asphalt Pavement	TON	64,775		
907-403-A015	9.5-mm, ST, Asphalt Pavement	TON	23,628		2
406-D001	Fine Milling of Bituminous Pavement, All Depths	SY	43,120		
407-A001	Asphalt for Tack Coat	GAL	132,559		
907-413-E001	Sawing and Sealing Transverse Joints in Asphalt Pavement	LF	384		
907-420-A001	Undersealing	LBS	36,000		
423-A001	Rumble Strips, Ground In	MI	67		
606-B003	Guard Rail, Class A, Type 1, 'W' Beam, Metal Post	LF	3,500		
606-D001	Guard Rail, Bridge End Section	EA	24		
606-E001	Guard Rail, Terminal End Section	EA	24		
907-618-M2001	Work Zone Law Enforcement	HRS	2,000		
619-A1001	Temporary Traffic Stripe, Continuous White	MI	42		
619-A2001	Temporary Traffic Stripe, Continuous Yellow	MI	38		
619-A3001	Temporary Traffic Stripe, Skip White	MI	45		
619-A5001	Temporary Traffic Stripe, Detail	LF	222,875		
619-A6002	Temporary Traffic Stripe, Legend	LF	5,195		
907-626-A007	6" Thermoplastic Double Drop Traffic Stripe, Skip White	MI	45		
907-626-C012	6" Thermoplastic Double Drop Edge Stripe, Continuous White	MI	42		
907-626-F003	6" Thermoplastic Double Drop Edge Stripe, Continuous Yellow	MI	38		
907-626-G006	Thermoplastic Double Drop Detail Stripe, White	LF	133,100		
907-626-G007	Thermoplastic Double Drop Detail Stripe, Yellow	LF	89,775		
907-626-H006	Thermoplastic Double Drop Legend, White	SF	3,163		
907-626-H007	Thermoplastic Double Drop Legend, White	LF	5,195		
907-627-J001	Two-Way Clear Reflective High Performance Raised Markers	EA	150		
907-627-K001	Red-Clear Reflective High Performance Raised Markers	EA	6,557		
907-627-L001	Two-Way Yellow Reflective High Performance Raised Markers	EA	2,268		
907-627-M001	One-Way Clear Reflective High Performance Raised Markers	EA	800		
907-627-N001	One-Way Yellow Reflective High Performance Raised Markers	EA	800		
907-628-G003	6" High Performance Cold Plastic Traffic Stripe, Skip White	LF	1,146		
907-628-H005	6" High Performance Cold Plastic Traffic Stripe, Continuous White	LF	6,027		
907-628-J003	6" High Performance Cold Plastic Traffic Stripe, Continuous Yellow	LF	6,027		
629-A005	Vehicular Impact Attenuator, 70 MPH	EA	1		
630-F006	Delineators, Guard Rail, White	EA	115		
630-F007	Delineators, Guard Rail, Yellow	EA	88		
630-G005	Type 3 Object Markers, OM-3R or OM-3L, Post Mounted	EA	26		

1 Includes removal of Bridge End Section, Guard Rail, Terminal End Sections, Post, Blockouts, and Hardware.

DEPARTMENT OF TRANSPORTATION MISSISSIPPI

MDOT MISSISSIPPI DEPARTMENT OF TRANSPORTATION

DESIGNED BY: MDOT
DETAILED BY: MDOT
CHECKED BY: MDOT
DATE: JUL 2025

FMS CON: 108634/301200
PROJECT NO.: NHPP-0064-01(038)
COUNTY: HARRISON

SUMMARY OF QUANTITIES 1

SHEET ID
SQ-6

SHEET NO.
25

PLAN SHEET

7/23/2025 4:57:33 PM SQ.dgn

ADDENDUM

SUMMARY OF QUANTITIES (SHEET 7)

PAY ITEM NO.	PAY ITEM	UNIT	Total Amount Prelim	Total Amount Final	
201-A001	Clearing and Grubbing	LS	1		
202-A001	Removal of Obstructions	LS	1		△1
202-B006	Removal of Asphalt Paved Shoulders, All Depths	SY	55,169		
202-B007	Removal of Asphalt Pavement, All Depths	SY	65,034		
202-B059	Removal of Concrete Median & Island Pavement, All Depths	SY	700		
202-B063	Removal of Concrete Paved Ditch	SY	1,618		
202-B088	Removal of Curb & Gutter, All Types	LF	2,380		
202-B092	Removal of Curb, All Types	LF	270		1
202-B129	Removal of Flared End Section, All Sizes	EA	17		
202-B135	Removal of Guard Post	EA	27		9
202-B150	Removal of Guard Rail Including Post, Blockouts & Hardware	LF	6,375		11
202-B162	Removal of Impact Attenuator	EA	1		
202-B164	Removal of Inlet and Junction Box, All Types & Sizes	EA	77		8
202-B170	Removal of Junction Box	EA	10		10
202-B176	Removal of Lighting Controllers	EA	1		10
202-B179	Removal of Low Mast Lighting Foundation	EA	19		10 △1
202-B191	Removal of Pipe, 8" And Above	LF	273		5
202-B195	Removal of Pull Box	EA	19		10
202-B240	Removal of Traffic Stripe	LF	13,200		△2
202-B278	Removal & Replacement of Edge Drain Outlet	EA	171		2
203-A001	Unclassified Excavation, FM, AH	CY	70,062		
203-EX018	Borrow Excavation, AH, FME, Class B7-6	CY	8,751		
203-G001	Excess Excavation, FM, AH	CY	10,615		
206-A001	Structure Excavation	CY	1,655		3
206-B001	Select Material for Undercuts, Contractor Furnished, FM	CY	5		
209-A005	Geotextile Stabilization, Type V, Non-Woven	SY	285,500		
211-B001	Topsoil for Slope Treatment, Contractor Furnished	CY	29,203		
213-C001	Superphosphate	TON	55		
216-A001	Solid Sodding	SY	2,804		7
217-A001	Ditch Liner	SY	10,082		
219-A001	Watering	KGAL	56		
220-A001	Insect Pest Control	ACRE	109		
221-A001	Concrete Paved Ditch	CY	380		6
223-A001	Mowing	ACRE	109		
225-A001	Grassing	ACRE	109		
225-B001	Agricultural Limestone	TON	326		
225-C001	Mulch, Vegetative Mulch	TON	217		
226-A001	Temporary Grassing	ACRE	109		
229-A001	Erosion Mat	SY	5,112		
907-234-A001	Temporary Silt Fence	LF	57,820		
907-234-D001	Inlet Siltation Guard	EA	125		
907-234-E001	Reset Inlet Siltation Guard	EA	125		
237-A002	Wattles, 20"	LF	13,016		
246-B001	Rockbags	EA	22,431		
249-A001	Riprap for Erosion Control	TON	715		
304-F001	3/4" and Down Crushed Stone Base	TON	220,607		4

1. Removal of quick curb with snap back delineators.
2. See sheet EDD-1 & EDD-2 for details.
3. Includes 1,643 CY for pipe culverts and 12 CY for box culverts.
4. Includes a 20% increase from calculated quantity and 21,700 TONS to be used as directed by the project engineer.
5. Cost of cutting pipe for new inlet and junction box locations to be absorbed in removal of pipe pay item.
6. Includes 214 CY for paved ditches, 159 CY for paved flumes, and 6.834 CY for paved aprons.
7. Includes 1,084 SY for ditches, 1,524 SY for paved flumes, and 196 SY for curb & gutter.
8. Includes removal of 77 inlets.
9. For removal of timber guard posts located in median at Big John Road.
10. See lighting demolition plan on sheet LR-1 for locations.
11. Includes removal of Bridge End Section, Guard Rail, Terminal End Sections, Post, Blockouts, and Hardware.

TRAVIS WAYNE BLACK LICENSED PROFESSIONAL ENGINEER 19727 STATE OF MISSISSIPPI
07/23/25

MDOT MISSISSIPPI DEPARTMENT OF TRANSPORTATION

DESIGNED BY: GARVER
DETAILED BY: RDL IV
CHECKED BY: TWB
DATE: JUL 2025

FMS CON: 108634/301000, 301100, & 301200
PROJECT NO.: HSIP-0064-01(038) NHPP-0064-01(038)
COUNTY: HARRISON

SUMMARY OF QUANTITIES △1

SHEET ID SQ-7
SHEET NO. 26

PLAN SHEET
7/23/2025 4:57:37 PM SQ.dgn

ADDENDUM

SUMMARY OF QUANTITIES (SHEET 8)

PAY ITEM NO.	PAY ITEM	UNIT	Total Amount Prelim	Total Amount Final	
	OR				
304-F002	Size 610 Crushed Stone Base	TON	220,607		1
	OR				
304-F003	Size 825B Crushed Stone Base	TON	220,607		1
907-403-A002	12.5-mm, MT, Asphalt Pavement	TON	28,611		
907-403-A005	19-mm, MT, Asphalt Pavement	TON	26,048		
907-403-A006	19-mm, ST, Asphalt Pavement	TON	31,947		
907-403-A013	9.5-mm, HT, Asphalt Pavement	TON	64,775		
907-403-A014	9.5-mm, MT, Asphalt Pavement	TON	22,595		
907-403-A015	9.5-mm, ST, Asphalt Pavement	TON	23,628		2
406-D001	Fine Milling of Bituminous Pavement, All Depths	SY	47,224		
407-A001	Asphalt for Tack Coat	GAL	181,457		
907-413-E001	Sawing and Sealing Transverse Joints in Asphalt Pavement	LF	384		
907-420-A001	Undersealing	LBS	36,000		
423-A001	Rumble Strips, Ground In	MI	67		
503-C010	Saw Cut, Full Depth	LF	141,194		
601-A001	Class "B" Structural Concrete	CY	63		
601-B001	Class "B" Structural Concrete, Minor Structures	CY	193		2
602-A001	Reinforcing Steel	LBS	22,650		3
603-CA012	18" Reinforced Concrete Pipe, Class III, Rubber Type Gaskets	LF	3,700		
603-CA027	24" Reinforced Concrete Pipe, Class III, Rubber Type Gaskets	LF	32		
603-CA041	30" Reinforced Concrete Pipe, Class III, Rubber Type Gaskets	LF	16		
603-CA056	36" Reinforced Concrete Pipe, Class III, Rubber Type Gaskets	LF	8		
603-CA067	42" Reinforced Concrete Pipe, Class III, Rubber Type Gaskets	LF	8		
603-CA077	48" Reinforced Concrete Pipe, Class III, Rubber Type Gaskets	LF	8		
603-CA088	54" Reinforced Concrete Pipe, Class III, Rubber Type Gaskets	LF	32		
603-CB003	18" Reinforced Concrete End Section	EA	14		
603-CB004	24" Reinforced Concrete End Section	EA	3		
603-CB005	30" Reinforced Concrete End Section	EA	2		
603-CB006	36" Reinforced Concrete End Section	EA	1		
603-CB007	42" Reinforced Concrete End Section	EA	1		
603-CB008	48" Reinforced Concrete End Section	EA	1		
603-CB009	54" Reinforced Concrete End Section	EA	3		
603-CE003	22" x 13" Concrete Arch Pipe, Class A III, Flexible Plastic Gaskets	LF	5,116		
603-CF002	22" x 13" Concrete Arch Pipe End Section	EA	62		
603-SB004	18" Branch Connections, Stub into 54" Concrete Pipe	EA	2		
604-A001	Castings	LBS	1,594		
604-B001	Gratings	LBS	24,150		
907-604-PP001	Modify Existing Inlet, Per Plans	EA	18		4
606-B003	Guard Rail, Class A, Type 1, 'W' Beam, Metal Post	LF	3,500		
606-D001	Guard Rail, Bridge End Section	EA	24		
606-E001	Guard Rail, Terminal End Section	EA	24		
609-B003	Concrete Curb, Special Design for Slotted Curb	LF	3,430		
609-D003	Combination Concrete Curb and Gutter Type 2	LF	17,933		
609-D012	Combination Concrete Curb and Gutter Type 3A Modified	LF	27,438		
612-A001	Flowable Fill, Excavatable	CY	23		

1. Includes a 20% increase from calculated quantity and 21,700 TONS to be used as directed by the project engineer.
2. Includes 148.88 CY for minor structures, 38.54 CY for junction boxes, and 5.50 CY for sign footings.
3. Includes 10,363 LBS for minor structures, 3,951 LBS for junction boxes, and 8,336 LBS for box culverts.
4. Refer to sheet DD-1 for drainage details and locations.

TRAVIS WAYNE BLACK LICENSED PROFESSIONAL ENGINEER 19727 STATE OF MISSISSIPPI
07/23/25

MDOT MISSISSIPPI DEPARTMENT OF TRANSPORTATION

DESIGNED BY: GARVER
DETAILED BY: RDL IV
CHECKED BY: TWB
DATE: JUL 2025

FMS CON: 108634/301000, 301100, & 301200
PROJECT NO.: HSIP-0064-01(038) NHPP-0064-01(038)
COUNTY: HARRISON

SUMMARY OF QUANTITIES 1

SHEET ID SQ-8
SHEET NO. 27

PLAN SHEET
7/23/2025 4:57:41 PM SQ.dgn

ADDENDUM

SUMMARY OF QUANTITIES (SHEET 10)

PAY ITEM NO.	PAY ITEM	UNIT	Total Amount Prelim	Total Amount Final	
907-632-J001	Power Service Pedestal	EA	6		
907-634-A041	Traffic Signal Equipment Pole, Type II(L), 30' Shaft, 25' Arm	EA	1		
907-634-A042	Traffic Signal Equipment Pole, Type II(L), 30' Shaft, 30' Arm	EA	2		
907-634-A043	Traffic Signal Equipment Pole, Type II(L), 30' Shaft, 35' Arm	EA	1		
907-634-A044	Traffic Signal Equipment Pole, Type II(L), 30' Shaft, 40' Arm	EA	4		
907-634-A045	Traffic Signal Equipment Pole, Type II(L), 30' Shaft, 45' Arm	EA	2		
907-634-A224	Traffic Signal Equipment Pole, Type III(L), 30' Shaft, 25' & 45' Arm	EA	1		
907-634-A226	Traffic Signal Equipment Pole, Type III(L), 30' Shaft, 25' & 55' Arm	EA	2		
907-634-A227	Traffic Signal Equipment Pole, Type III(L), 30' Shaft, 25' & 60' Arm	EA	1		
907-634-A230	Traffic Signal Equipment Pole, Type III(L), 30' Shaft, 30' & 40' Arm	EA	1		
907-634-A232	Traffic Signal Equipment Pole, Type III(L), 30' Shaft, 30' & 50' Arm	EA	1		
907-634-A254	Traffic Signal Equipment Pole, Type III(L), 30' Shaft, 40' & 40' Arm	EA	1		
907-634-A426	Traffic Signal Equipment Pole, Type III, 30' Shaft, 25' & 55' Arm	EA	2		
907-634-A539	Traffic Signal Equipment Pole, Type V, 10' Shaft	EA	16		
907-634-B001	Traffic Signal Equipment Pole Shaft Extension, 10'	EA	3		2
907-634-C002	Pole Foundations, Class "DS" Concrete	CY	84		
907-634-D003	Slip Casing, 36" Diameter	LF	285		
635-A059	Traffic Signal Head, Type 1	EA	24		4
635-A060	Traffic Signal Head, Type 1A	EA	12		
635-A061	Traffic Signal Head, Type 2	EA	18		
635-A063	Traffic Signal Head, Type 2R	EA	18		4
635-A069	Traffic Signal Head, Type 2U	EA	6		4
907-636-B003	Electric Cable, Underground in Conduit, IMSA 20-1, AWG 10, 2 Conductor	LF	6,818		8 11
907-636-B013	Electric Cable, Underground in Conduit, IMSA 20-1, AWG 14, 4 Conductor	LF	9,496		8
907-636-B016	Electric Cable, Underground in Conduit, IMSA 20-1, AWG 14, 8 Conductor	LF	31,041		8
907-636-B028	Electric Cable, Underground in Conduit, IMSA 20-1, AWG 8, 3 Conductor	LF	1,827		8 12
907-636-B040	Electric Cable, Underground in Conduit, THHN, AWG #12, 3 Conductor	LF	3,137		2 8
907-637-A002	Pullbox Enclosure, Type 2	EA	53		
907-637-A003	Pullbox Enclosure, Type 3	EA	9		
907-637-C028	Traffic Signal Conduit, Underground, Type 4, 2"	LF	13,534		9
907-637-C030	Traffic Signal Conduit, Underground, Type 4, 3"	LF	5,201		2
907-637-D003	Traffic Signal Conduit, Underground Drilled or Jacked, Rolled Pipe, 3"	LF	3,426		
907-637-D009	Traffic Signal Conduit, Underground Drilled or Jacked, Type 4, 2"	LF	1,160		10
638-A003	Flashing Assembly, Be Prepared to Stop When Flashing	EA	12		
907-641-A002	Signal Stop Bar Radar Vehicle Detection Sensor, Type 2	EA	24		3 2
907-641-B002	Signal Advanced Radar Vehicle Detection Sensor, Type 2	EA	6		3 2
907-641-D001	Radar Vehicle Detection Cable	LF	18,614		5
907-641-F002	Signal Radar Vehicle Detection Processor, Type 2	EA	6		
647-A001	Removal of Existing Traffic Signal Equipment	LS	1		1
907-650-A002	On Street Video Equipment, Fixed Type	EA	2		7
907-650-A003	On Street Video Equipment, PTZ Type	EA	2		7
907-650-A004	On Street Video Equipment, PTZ Type, Signal Monitoring	EA	3		6
907-653-A001	Traffic Sign	SF	351		
907-653-B001	Street Name Sign	SF	150		
907-659-A001	Traffic Management Center Modifications	LS	1		
907-661-B002	Fiber Optic Drop Cable, 12 SM	LF	3,403		2

1. At MS 67 at Lickskillet Road, traffic signal equipment shall be salvaged to the City of Biloxi. At MS 67 at Shriners Blvd/Lamey Bridge Road, existing traffic signal cabinet and contents shall be salvaged and delivered to MDOT.
2. To be used for radar detector power at the u-turn intersections in conjunction with radar detector cable.
3. The manufacturer's representative shall be on site during installation and testing and shall provide onsite training on the setup, operation, and maintenance of the system.
4. Traffic signal heads shall be reflectorized as per TSD-2.
5. Radar detection cable shall be size and specification as recommended by manufacturer.
6. Cost of cabling is to be absorbed. May be relocated to a different pole at the direction of the project engineer. Camera location shall provide optimal sight distance.
7. Located at Shriners Boulevard and Traditions Parkway. Cost of cabling is to be absorbed.
8. Includes all cabling in conduit, mast arms, and poles.
9. Includes 7,714 LF for Traffic Signal Conduit and 5,820 LF for Lighting Conduit
10. For Lighting Conduit
11. To be used for luminaire cabling denoted as "LUM" on traffic signal plan sheets.
12. To be used for power cabling denoted as "POW" on traffic signal plan sheets.

TRAVIS WAYNE BLACK LICENSED PROFESSIONAL ENGINEER 19727 STATE OF MISSISSIPPI
07/23/25

MDOT MISSISSIPPI DEPARTMENT OF TRANSPORTATION

DESIGNED BY: GARVER
DETAILED BY: RDL IV
CHECKED BY: TWB
DATE: JUL 2025

FMS CON: 108634/301000, 301100, & 301200
PROJECT NO.: HSIP-0064-01(038) NHPP-0064-01(038)
COUNTY: HARRISON

SUMMARY OF QUANTITIES 1

SHEET ID SQ-10
SHEET NO. 28.1

PLAN SHEET
7/23/2025 4:57:45 PM SQ.dgn

ADDENDUM

SUMMARY OF QUANTITIES (SHEET 11)

PAY ITEM NO.	PAY ITEM	UNIT	Total Amount Prelim	Total Amount Final	
907-662-D001	Radio Interconnect, Broadband, Long Range	EA	2		4
907-662-D002	Radio Interconnect, Broadband, Short Range	EA	3		3 △2
907-663-A002	Network Switch, Type B	EA	3		△2
907-663-A006	Network Switch, Type F	EA	2		2 △2
907-672-A003	Remove and Reset Traffic Signal Equipment	EA	5		1
682-A039	Underground Branch Circuit, AWG 8, 3 Conductor	LF	6,350		
682-D003	Underground Pull Box	EA	46		
682-E002	Underground Junction Box	EA	10		
682-F001	Secondary Power Controller	EA	1		
683-B005	Lighting Assembly, Low Mast, LED, Type 40-1-8-213	EA	46		
684-A003	Pole Foundation, 24" Diameter	CY	48		
685-D001	Service Pole	EA	1		
699-A001	Roadway Construction Stakes	LS	1		
815-A007	Loose Riprap, Size 300	TON	279		
815-E001	Geotextile under Riprap	SY	370		
815-F002	Sediment Control Stone	TON	108		

1. Remove and reset existing radio, PTZ camera, fixed camera, and pole shaft extension from existing signal pole in southwest corner to proposed Signal Pole D at MS 67 at Lickskillet Road. Remove and reset existing network switch from existing controller to proposed traffic signal controller at MS 67 at Lickskillet Road.
2. △2 Located at both Shriner's Blvd and Traditions Parkway. Type F network switches shall be shipped to Kerby McFarland with MDOT IS Division for configuration.
3. Located at Shriners Boulevard and Traditions Parkway.
4. Long Range Broadband Radio Interconnect to be installed at Maple Street Water Tower in Biloxi, MS and Lyman Communication Tower at MDOT Gulf Region Office in Lyman, MS. All cost for a complete and operable system including cable, mounting hardware, and device configuration shall be included.

TRAVIS WAYNE BLACK
LICENSED PROFESSIONAL ENGINEER
19727
STATE OF MISSISSIPPI
07/23/25

MDOT
MISSISSIPPI DEPARTMENT OF TRANSPORTATION

DESIGNED BY: GARVER
DETAILED BY: RDL IV
CHECKED BY: TWB
DATE: JUL 2025

FMS CON: 108634/301000, 301100, & 301200
PROJECT NO.: HSIP-0064-01(038) NHPP-0064-01(038)
COUNTY: HARRISON

SUMMARY OF QUANTITIES △1

SHEET ID
SQ-11

SHEET NO.
28.2

ADDENDUM

TRAFFIC SIGNALS

WORKING DRAWING NUMBER	LOCATION	SOLID STATE TRAFFIC CABINET ASSEMBLY, TYPE III CABINET, TYPE I CONTROLLER	POWER SERVICE PEDESTAL	TRAFFIC SIGNAL EQUIPMENT POLES														POLE FOUNDATION CLASS "DS" CONCRETE	SLIP CASING	TRAFFIC SIGNAL HEADS				
				TYPE II(L)					TYPE III(L)						TYPE III	TYPE V	POLE SHAFT EXTENSION							
				30' SHAFT											30' SHAFT	10' SHAFT								
				25' ARM	30' ARM	35' ARM	40' ARM	45' ARM	25' & 45' ARM	25' & 55' ARM	25' & 60' ARM	30' & 40' ARM	30' & 50' ARM	40' & 40' ARM	25' & 55' ARM		10'		36" DIAM.	TYPE 1	TYPE 1A	TYPE 2	TYPE 2R	TYPE 2U
		EA	EA	EA					EA						EA	EA	EA	CY	LF	EA				
TSI-1	Lickskillet Rd Matchlines														2	2		9	30	4		4		2
TSI-2	Lickskillet Rd	2	2		1	1		2								6	1	19	60	4	4	2	6	
TSI-3	Shriners Blvd Matchlines									1	1					2		9	30	4		4		2
TSI-4	Shriners Blvd	2	2	1			1		1					1		2	1	17	60	4	4	2	6	
TSI-5	Tradition Pkwy Matchlines									1			1			2		9	30	4		4		2
TSI-6	Tradition Pkwy	2	2		1		3					1				2	1	21	75	4	4	2	6	
	TOTAL	6	6	1	2	1	4	2	1	2	1	1	1	1	2	16	3	84	285	24	12	18	18	6

2

TRAFFIC SIGNALS CONT'D.

WORKING DRAWING NUMBER	LOCATION	ELECTRIC CABLE, UNDERGROUND IN CONDUIT					PULL BOX ENCLOSURE		TRAFFIC SIGNAL CONDUIT (UNDERGROUND)			FLASHING ASSEMBLY, BE PREPARED TO STOP WHEN FLASHING	SIGNAL STOP BAR RADAR VEHICLE DETECTION SENSOR, TYPE 2	SIGNAL ADVANCED RADAR VEHICLE DETECTION SENSOR, TYPE 2	RADAR VEHICLE DETECTION CABLE	SIGNAL RADAR VEHICLE DETECTION PROCESSOR, TYPE 2	REMOVAL OF EXISTING TRAFFIC SIGNAL EQUIPMENT	ON STREET VIDEO EQUIPMENT, FIXED TYPE	ON STREET VIDEO EQUIPMENT, PTZ TYPE	ON STREET VIDEO EQUIPMENT, PTZ TYPE, SIGNAL MONITORING	TRAFFIC SIGN	STREET NAME SIGN	TRAFFIC MANAGEMENT CENTER MODIFICATION	FIBER OPTIC DROP CABLE, 12 SM	RADIO INTERCONNECT, BROADBAND, LONG RANGE	RADIO INTERCONNECT, BROADBAND, SHORT RANGE	NETWORK SWITCH, TYPE B	NETWORK SWITCH, TYPE F	REMOVE AND RESET TRAFFIC SIGNAL EQUIPMENT
		IMSA-20-1 AWG 10	IMSA-20-1 AWG 14	IMSA-20-1 AWG 14	IMSA-20-1 AWG 8	THHN AWG 12			TYPE 4		ROLLED PIPE																			
		2C	4C	8C	3C	3C	TYPE 2	TYPE 3	2"	3"	3"																			
		LF					EA		LF			EA	EA	EA	LF	EA	LS	EA	EA	EA	SF	SF	LS	LF	EA	EA	EA	EA	EA
TSI-1	Lickskillet Rd Matchlines	0	2877	3435	0	981	10		1800	995	311	4	2	2	2302						51.00	19.50							
TSI-2	Lickskillet Rd	1463	144	8420	829	159	9	3	702	1064	789		6		4191	2	0.33			1	66.00	32.00		1256		1	1		5
TSI-3	Shriners Blvd Matchlines	527	2760	1847	0	437	10		2182	176	663	4	2	2	1224						51.00	19.50							
TSI-4	Shriners Blvd	1722	310	6805	679	325	7	3	535	1061	747		6		4186	2	0.33	1	1	1	66.00	38.00		1156	1	1	1	1	
TSI-5	Tradition Pkwy Matchlines	1087	3185	3258	0	997	11		2115	832	377	4	2	2	2264						51.00	19.50							
TSI-6	Tradition Pkwy	2019	220	7276	319	238	6	3	380	1073	539		6		4447	2	0.33	1	1	1	66.00	21.00		991	1	1	1	1	
	TOTAL	6818	9496	31041	1827	3137	53	9	7714	5201	3426	12	24	6	18614	6	1.00	2	2	3	351.00	149.5	1.00	3403	2	3	3	2	5

2 2 2 2 2 2

PLAN SHEET

DATE 4:58:01 PM EQ-SIGNALS.dgn

CLAIRE E. MCKINNEY LICENSED PROFESSIONAL ENGINEER 28988 STATE OF MISSISSIPPI
07/23/25

MDOT MISSISSIPPI DEPARTMENT OF TRANSPORTATION

DESIGNED BY: GARVER
DETAILED BY: AS
CHECKED BY: NDT
DATE: JUL 2025

FMS CON: 108634/301000
PROJECT NO.: HSIP-0064-01(038)
COUNTY: HARRISON

ESTIMATED QUANTITIES
TRAFFIC SIGNAL ITEMS

SHEET ID
EQ-12

SHEET NO.
40

ADDENDUM

POLE SCHEDULE

POLE NO.	POLE TYPE	SHAFT LENGTH	MAST ARM LENGTH	DIRECTION	SPACING	STREET NAME SIGN LEGEND	* FOUNDATION
K	III	30′	55′	SOUTHBOUND	37, 44, 46, 48, 50	-	36″ X 15′ W/ SLIP CASING
			25′	WESTBOUND	4, 8, 12, 18, 22	MS Hwy 67	
L	V	10′	-	NORTHBOUND	-	-	24″ X 5′
M	V	10′	-	SOUTHBOUND	-	-	24″ X 5′
N	III	30′	55′	NORTHBOUND	40, 46, 48, 50, 52	-	36″ X 15′ W/ SLIP CASING
			25′	EASTBOUND	4, 8, 12, 20, 24	MS Hwy 67	

NOTE: COST OF SERVICE POLE TO BE ABSORBED
* FOUNDATION DIAMETERS MAY NEED TO BE ADJUSTED TO ACCOMMODATE SIGNAL POLE BOLT CIRCLES. CONTRACTOR TO PROVIDE ADEQUATE COVER TO ANCHOR BOLTS, AS DICTATED BY ANCHOR BOLTS CIRCLES PROVIDED BY POLE MANUFACTURER.

2024 PROJECTED TURNING MOVEMENTS

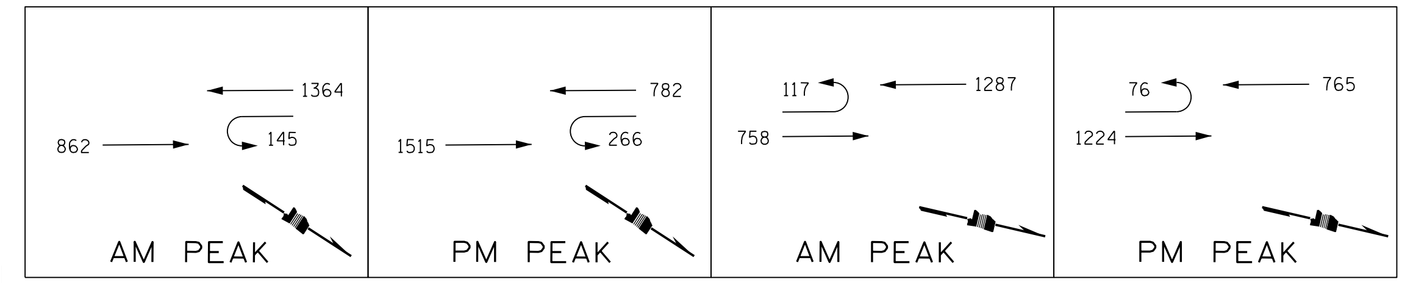

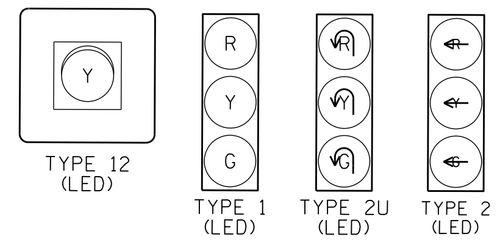

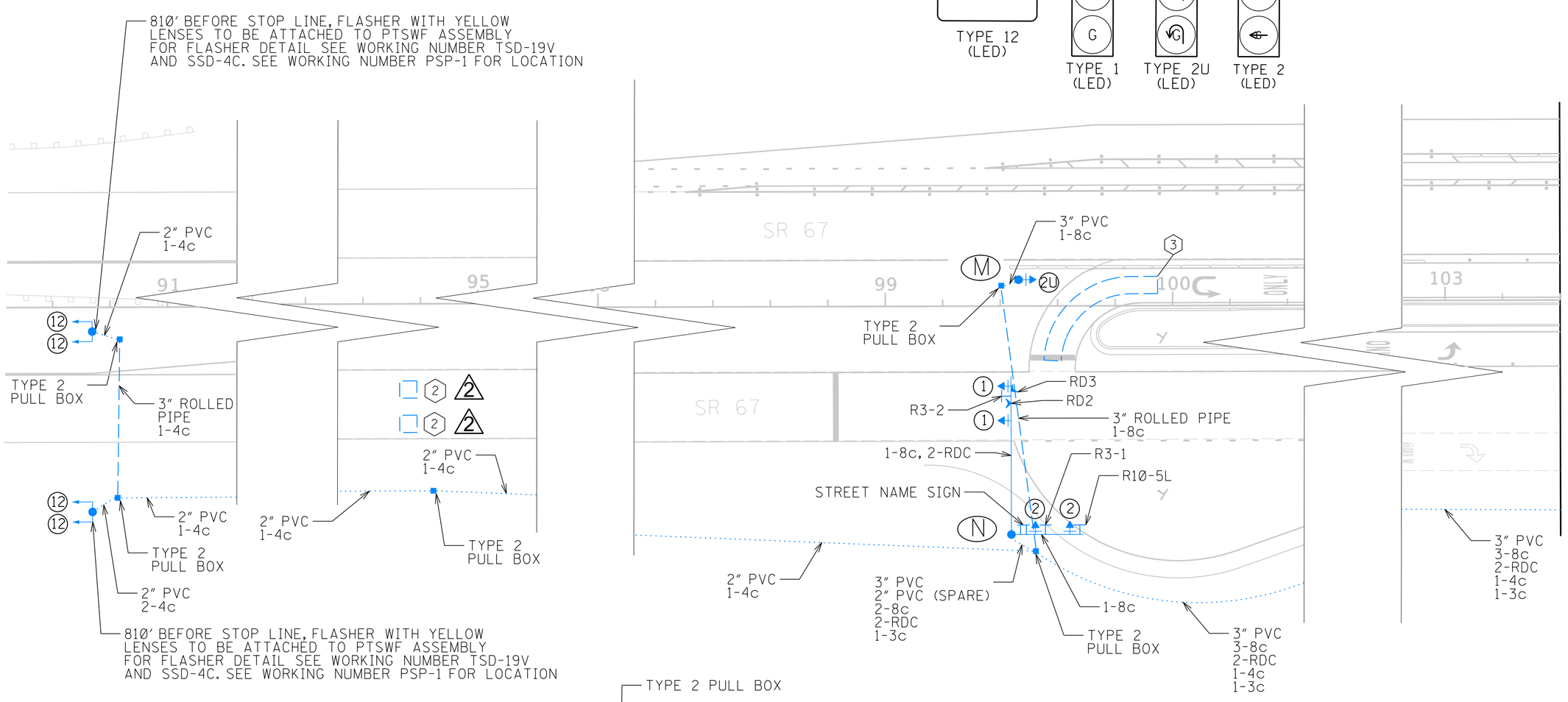

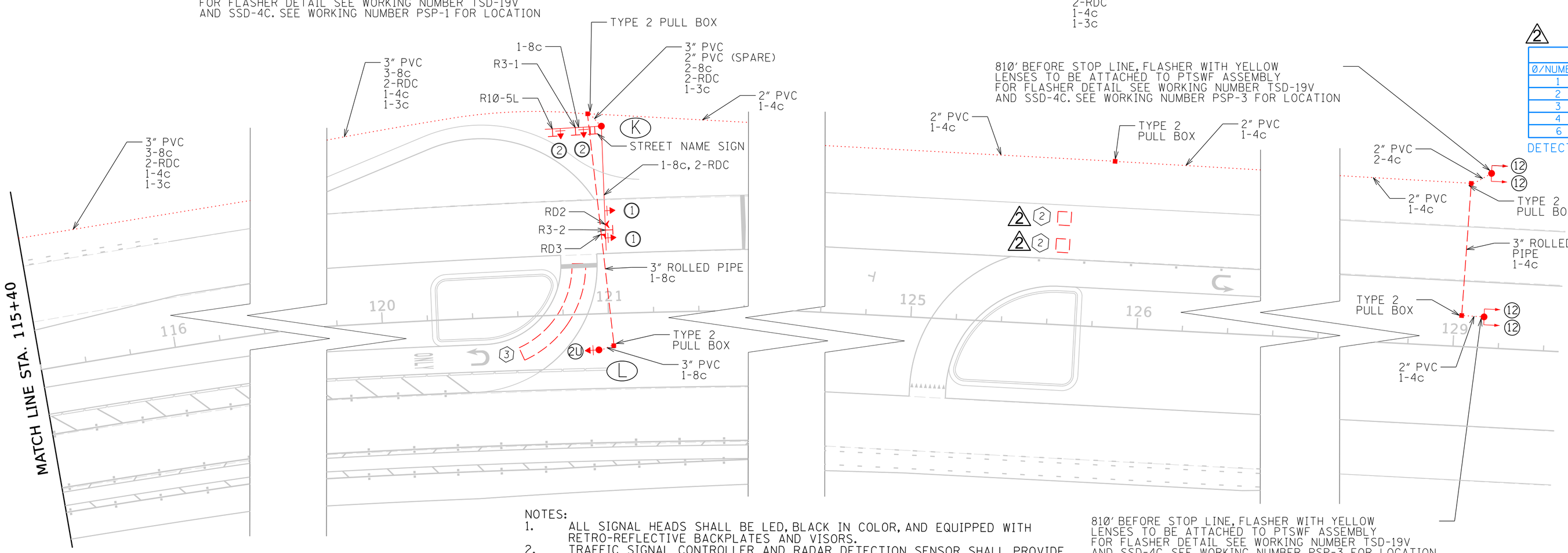

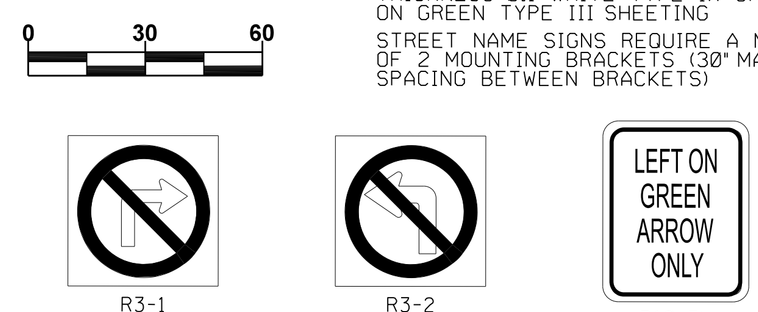

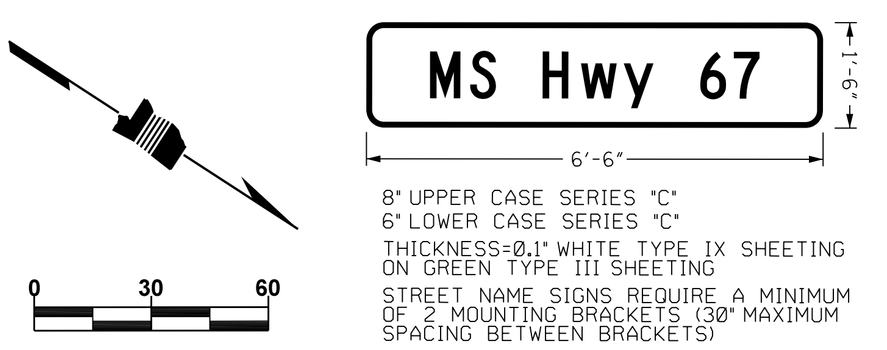

8″ UPPER CASE SERIES "C"
6″ LOWER CASE SERIES "C"
THICKNESS=0.1″ WHITE TYPE IX SHEETING ON GREEN TYPE III SHEETING
STREET NAME SIGNS REQUIRE A MINIMUM OF 2 MOUNTING BRACKETS (30″ MAXIMUM SPACING BETWEEN BRACKETS)

R3-1
(36″ X 36″)

R3-2
(36″ X 36″)

R10-5L
(30″ X 36″)

2

CONTROLLER/CABINET "SB"		
Ø/NUMBER	DETECTOR/AMP-CHANNEL	LOCATION
1	RD1	PRESENCE
2	RD2	PRIORITY/DARE PER TSD-9R
3	RD3	PRESENCE
4	RD4	PRESENCE
6	RD5	PRESENCE

DETECTOR NUMBER CORRESPONDS WITH INPUT PHASE NUMBER.

2

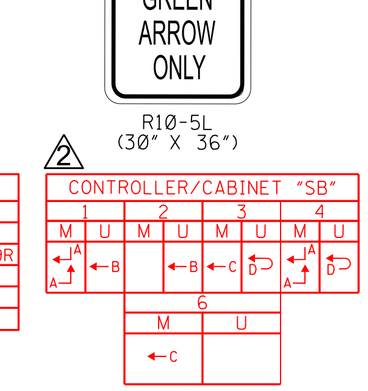

M: MAIN INTERSECTION
U: U-TURN INTERSECTION
OLA = Ø1 + Ø4
OLB = Ø1 + Ø2
OLC = Ø3 + Ø6
OLD = Ø3 + Ø4
100 s CYCLE LENGTH
Ø s OFFSET
Ø2 REFERENCE PHASE

2

CONTROLLER/CABINET "NB"		
Ø/NUMBER	DETECTOR/AMP-CHANNEL	LOCATION
1	RD1	PRESENCE
2	RD2	PRIORITY/DARE PER TSD-9R
3	RD3	PRESENCE
4	RD4	PRESENCE
6	RD5	PRESENCE

DETECTOR NUMBER CORRESPONDS WITH INPUT PHASE NUMBER.

2

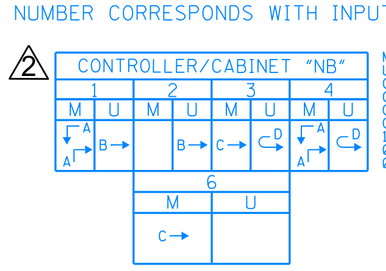

M: MAIN INTERSECTION
U: U-TURN INTERSECTION
OLA = Ø1 + Ø4
OLB = Ø1 + Ø2
OLC = Ø3 + Ø6
OLD = Ø3 + Ø4
100 s CYCLE LENGTH
Ø s OFFSET
Ø2 REFERENCE PHASE

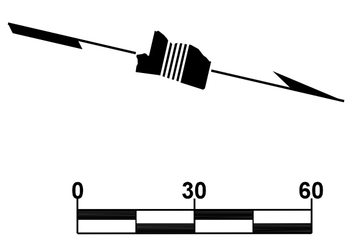

NOTES:
1. ALL SIGNAL HEADS SHALL BE LED, BLACK IN COLOR, AND EQUIPPED WITH RETRO-REFLECTIVE BACKPLATES AND VISORS.
2. TRAFFIC SIGNAL CONTROLLER AND RADAR DETECTION SENSOR SHALL PROVIDE DYNAMIC ALL RED EXTENSION (DARE) COLLISION ADVANCE FUNCTIONALITY ON SR 67. ALL EQUIPMENT, LABOR, AND OTHER INCIDENTAL MATERIALS REQUIRED FOR DARE FUNCTIONALITY SHALL BE COST ABSORBED AS PER TSD-9R.
3. DARE SHALL BE OPERATIONAL PRIOR TO SIGNAL BEING PLACED IN OPERATION.
4. SEE PAVEMENT MARKING DETAIL SHEETS FOR LOCATIONS OF STOP BARS.

SR 67 @ LICKSKILLET RD/OLD HWY 67

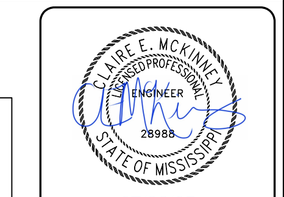

07/23/25

MDOT MISSISSIPPI DEPARTMENT OF TRANSPORTATION

DESIGNED BY: GARVER
DETAILED BY: AS
CHECKED BY: NDT
DATE: JUL 2025

FMS CON: 108634/301000
PROJECT NO.: HSIP-0064-01(038)
COUNTY: HARRISON

TRAFFIC SIGNAL INSTALLATION
SIGNAL LAYOUT
SR 67 @ LICKSKILLET RD / OLD HWY 67

1

SHEET ID
TSI-1

SHEET NO.
2001

PLAN SHEET

7/23/2025 8:37:10 PM TSI-1.dgn

ADDENDUM

2

CONTROLLER/CABINET "SB"		
Ø/NUMBER	DETECTOR/AMP-CHANNEL	LOCATION
1	RD1	PRESENCE
2	RD2	PRIORITY/DARE PER TSD-9R
3	RD3	PRESENCE
4	RD4	PRESENCE
6	RD5	PRESENCE

DETECTOR NUMBER CORRESPONDS WITH INPUT PHASE NUMBER.

2

CONTROLLER/CABINET "SB"							
1		2		3		4	
M	U	M	U	M	U	M	U
←A, A↑	←B		←B	←C	↩D	←A, A↑	↩D
6							
M	U						
←C							

M: MAIN INTERSECTION
U: U-TURN INTERSECTION
OLA = Ø1 + Ø4
OLB = Ø1 + Ø2
OLC = Ø3 + Ø6
OLD = Ø3 + Ø4
100 S CYCLE LENGTH
0 S OFFSET
02 REFERENCE PHASE

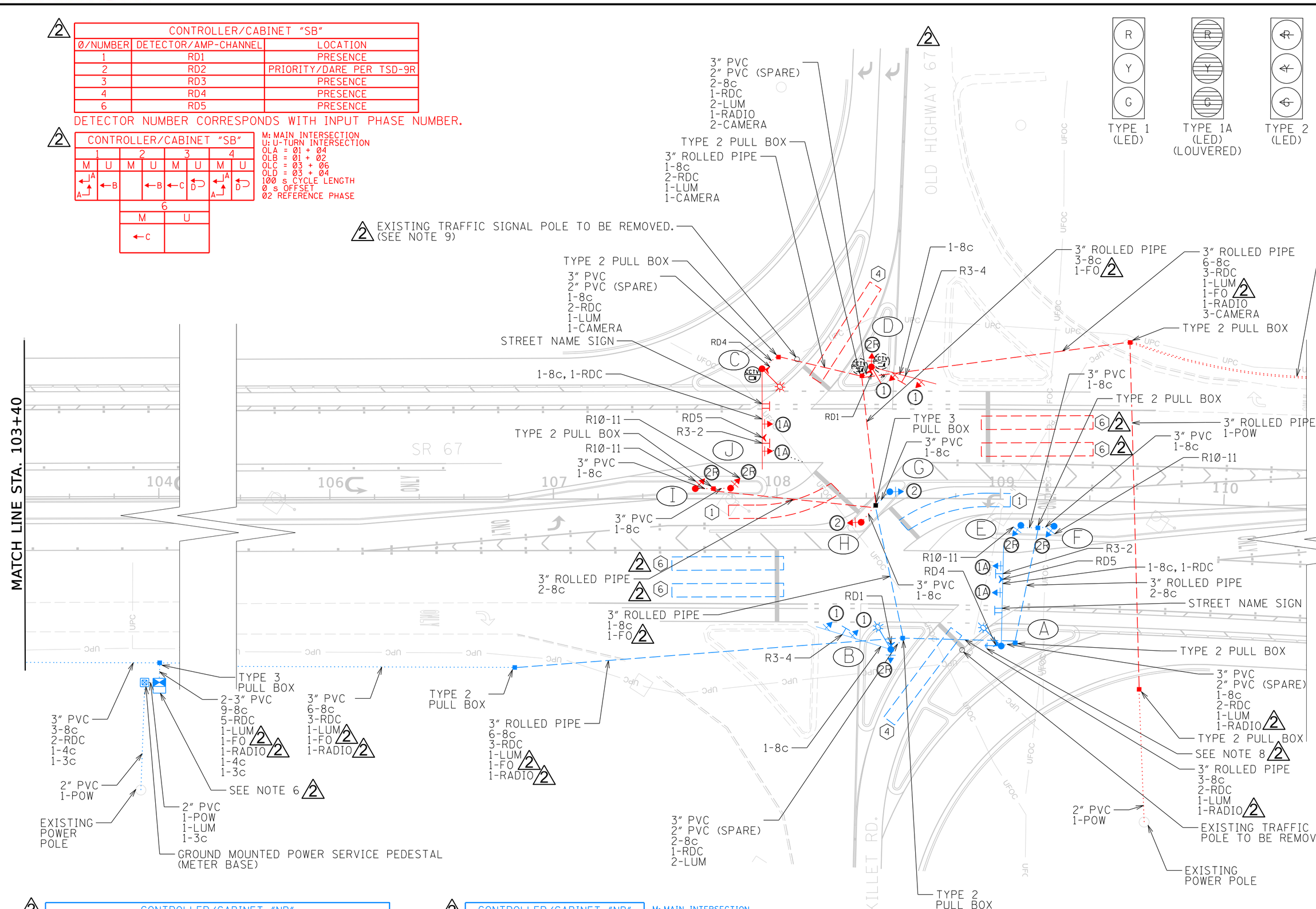

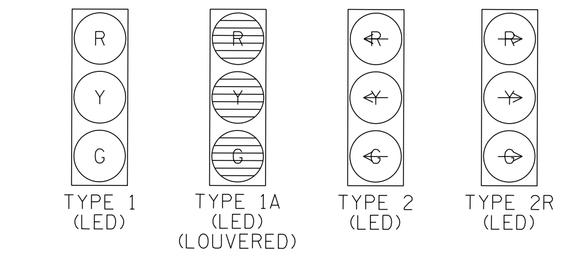

2024 PROJECTED TURNING MOVEMENTS

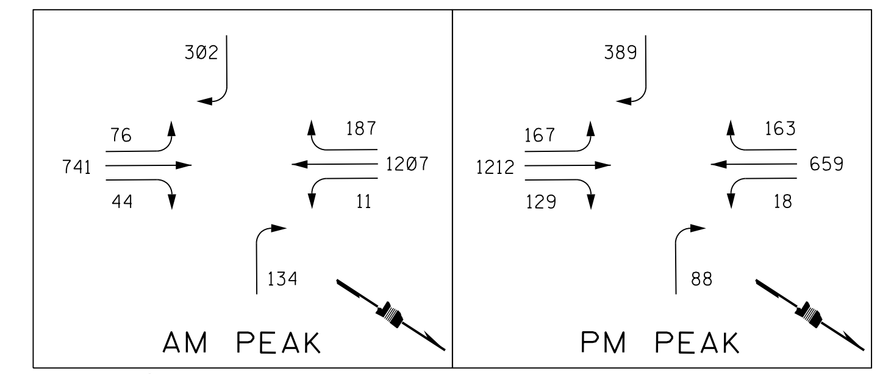

2

CONTROLLER/CABINET "NB"		
Ø/NUMBER	DETECTOR/AMP-CHANNEL	LOCATION
1	RD1	PRESENCE
2	RD2	PRIORITY/DARE PER TSD-9R
3	RD3	PRESENCE
4	RD4	PRESENCE
6	RD5	PRESENCE

DETECTOR NUMBER CORRESPONDS WITH INPUT PHASE NUMBER.

2

CONTROLLER/CABINET "NB"							
1		2		3		4	
M	U	M	U	M	U	M	U
←A, A↓	B→		B→	C→	↪D	←A, A↓	↪D
6							
M	U						
C→							

M: MAIN INTERSECTION
U: U-TURN INTERSECTION
OLA = Ø1 + Ø4
OLB = Ø1 + Ø2
OLC = Ø3 + Ø6
OLD = Ø3 + Ø4
100 S CYCLE LENGTH
0 S OFFSET
02 REFERENCE PHASE

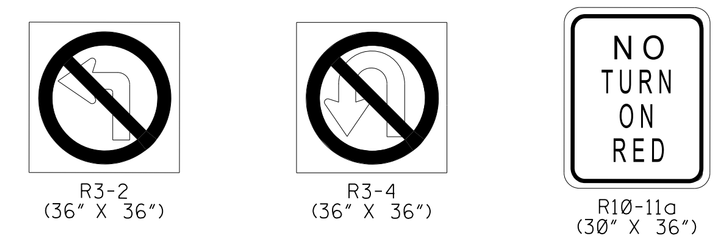

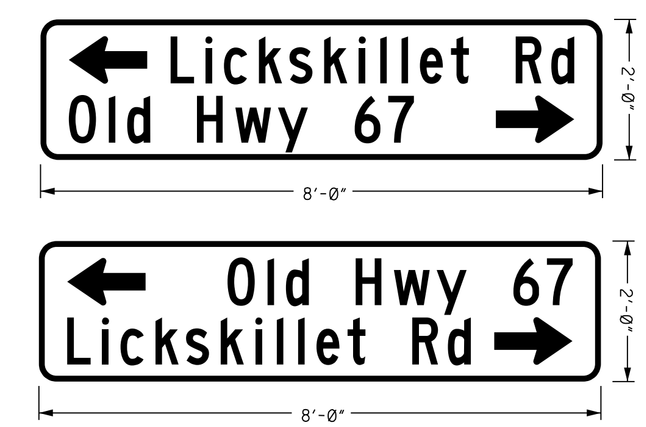

8" UPPER CASE SERIES "C"
6" LOWER CASE SERIES "C"
THICKNESS=0.1" WHITE TYPE IX SHEETING ON GREEN TYPE III SHEETING
STREET NAME SIGNS REQUIRE A MINIMUM OF 2 MOUNTING BRACKETS (30" MAXIMUM SPACING BETWEEN BRACKETS)

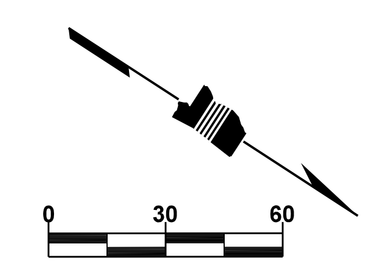

POLE SCHEDULE

POLE NO.	POLE TYPE	SHAFT LENGTH	MAST ARM LENGTH	DIRECTION	SPACING	STREET NAME SIGN LEGEND	FOUNDATION
A	II (L)	2 40'**	45'	NORTHBOUND	10, 16, 24, 30, 32, 36	OLD HWY 67/LICKSKILLET RD.	36" X 15' W/ SLIP CASING
B	II (L)	30'	35'	EASTBOUND	19, 23, 31	-	36" X 15' W/ SLIP CASING
C	II (L)	30'	45'	SOUTHBOUND	17, 25, 31, 33, 37	LICKSKILLET RD. /OLD HWY 67	36" X 15' W/ SLIP CASING
D	II (L)	2 40'***	30'	WESTBOUND	12, 16, 24	-	36" X 15' W/ SLIP CASING
E	V	10'	-	NORTHBOUND	-	-	24" X 5'
F	V	10'	-	NORTHBOUND	-	-	24" X 5'
G	V	10'	-	SOUTHBOUND	-	-	24" X 5'
H	V	10'	-	NORTHBOUND	-	-	24" X 5'
I	V	10'	-	SOUTHBOUND	-	-	24" X 5'
J	V	10'	-	SOUTHBOUND	-	-	24" X 5'

NOTE: COST OF SERVICE POLE TO BE ABSORBED
* FOUNDATION DIAMETERS MAY NEED TO BE ADJUSTED TO ACCOMMODATE SIGNAL POLE BOLT CIRCLES. CONTRACTOR TO PROVIDE ADEQUATE COVER TO ANCHOR BOLTS, AS DICTATED BY ANCHOR BOLTS CIRCLES PROVIDED BY POLE MANUFACTURER.
2** POLE A SHAFT LENGTH CONSISTS OF THE 30' TRAFFIC SIGNAL POLE SHAFT AND THE 10' POLE SHAFT EXTENSION AS MENTIONED IN NOTE 8.
2*** POLE D SHAFT LENGTH CONSISTS OF THE 30' TRAFFIC SIGNAL POLE SHAFT AND THE 10' POLE SHAFT EXTENSION THAT IS TO BE REMOVED AND RESET FROM THE EXISTING SIGNAL POLE TO POLE D AS MENTIONED IN NOTE 9.

NOTES:
1. ALL SIGNAL HEADS SHALL BE LED, BLACK IN COLOR, AND EQUIPPED WITH RETRO-REFLECTIVE BACKPLATES AND VISORS.
2. DESIGN WIND SPEED FOR TRAFFIC SIGNAL POLES SHALL BE 140 MPH. ACCORDING TO 2013 AASHTO SPECIFICATIONS. USE FATIGUE CATEROGY II. USE 50 YEAR DESIGN SERVICE LIFE, AND DO NOT CONSIDER GALLOPING OR TRUCK-INDUCED GUSTS. ICE LOADS INCLUDED. TRAFFIC SIGNAL POLES SHALL BE HOT DIPPED GALVANIZED.
3. TRAFFIC SIGNAL CONTROLLER AND RADAR DETECTION SENSOR SHALL PROVIDE DYNAMIC ALL RED EXTENSION (DARE) COLLISION ADVANCE FUNCTIONALITY ON SR 67. ALL EQUIPMENT, LABOR, AND OTHER INCIDENTAL MATERIALS REQUIRED FOR DARE FUNCTIONALITY SHALL BE COST ABSORBED AS PER TSD-9R.
4. DARE SHALL BE OPERATIONAL PRIOR TO SIGNAL BEING PLACED IN OPERATION.
5. EXISTING ITS CAMERA AND FIXED TYPE PTZ TO BE MOUNTED ON SIGNAL POLE SHAFT EXTENSION ON POLE D. PROPOSED TRAFFIC SIGNAL MONITORING CAMERA TO BE MOUNTED ON POLE C SHAFT.
6. EXISTING NETWORK SWITCH FROM EXISTING CONTROLLER SHALL BE REMOVED AND RESET TO BE INSTALLED IN PROPOSED CONTROLLER.
7. SEE PAVEMENT MARKING DETAIL SHEETS FOR LOCATIONS OF STOP BARS.
2 8. SHORT RANGE RADIO TO COMMUNICATE WITH EXISTING LONG RANGE RADIO INSTALLED ON POPP'S FERRY RD. (30.446698°, -88.893928°). SHORT RANGE RADIO TO BE MOUNTED ON 10' SIGNAL POLE SHAFT EXTENSION ON POLE A.
2 9. EXISTING RADIO, PTZ CAMERA, FIXED CAMERA, AND POLE SHAFT EXTENSION SHALL BE REMOVED AND RESET ON POLE D. COMMUNICATION OF THESE DEVICES TO MDOT NETWORK SHALL BE MAINTAINED.

SR 67 @ LICKSKILLET RD/OLD HWY 67

CLAIRE E. MCKINNEY
LICENSED PROFESSIONAL ENGINEER
28988
STATE OF MISSISSIPPI
07/23/25

MISSISSIPPI DEPARTMENT OF TRANSPORTATION

DESIGNED BY: GARVER
DETAILED BY: AS
CHECKED BY: NDT
DATE: JUL 2025

FMS CON: 108634/301000
PROJECT NO.: HSIP-0064-01(038)
COUNTY: HARRISON

TRAFFIC SIGNAL INSTALLATION
SIGNAL LAYOUT
SR 67 @ LICKSKILLET RD / OLD HWY 67

SHEET ID
TSI-2

SHEET NO.
2002

PLAN SHEET
TSI-2.dgn
8:37:26 PM
DATE

ADDENDUM

2

CONTROLLER/CABINET "NB"		
Ø/NUMBER	DETECTOR/AMP-CHANNEL	LOCATION
1	RD1	PRESENCE
2	RD2	PRIORITY/DARE PER TSD-9R
3	RD3	PRESENCE
4	RD4	PRESENCE
6	RD5	PRESENCE

DETECTOR NUMBER CORRESPONDS WITH INPUT PHASE NUMBER.

2

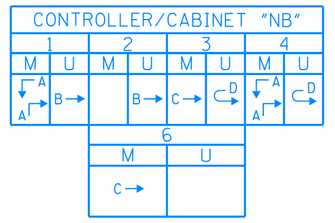

M: MAIN INTERSECTION
U: U-TURN INTERSECTION
OLA = Ø1 + Ø4
OLB = Ø1 + Ø2
OLC = Ø3 + Ø6
OLD = Ø3 + Ø4
100 s CYCLE LENGTH
Ø s OFFSET
Ø2 REFERENCE PHASE

2024 PROJECTED TURNING MOVEMENTS

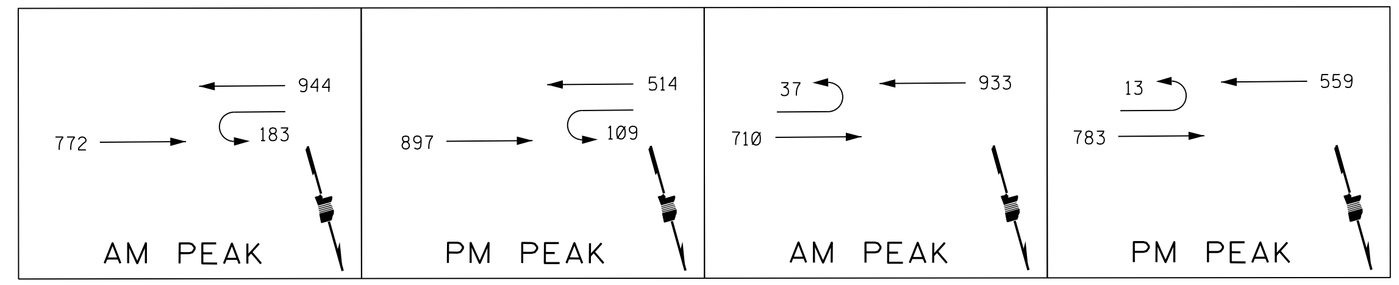

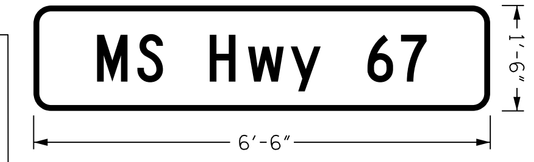

8" UPPER CASE SERIES "C"
6" LOWER CASE SERIES "C"
THICKNESS=0.1" WHITE TYPE IX SHEETING ON GREEN TYPE III SHEETING
STREET NAME SIGNS REQUIRE A MINIMUM OF 2 MOUNTING BRACKETS (30" MAXIMUM SPACING BETWEEN BRACKETS)

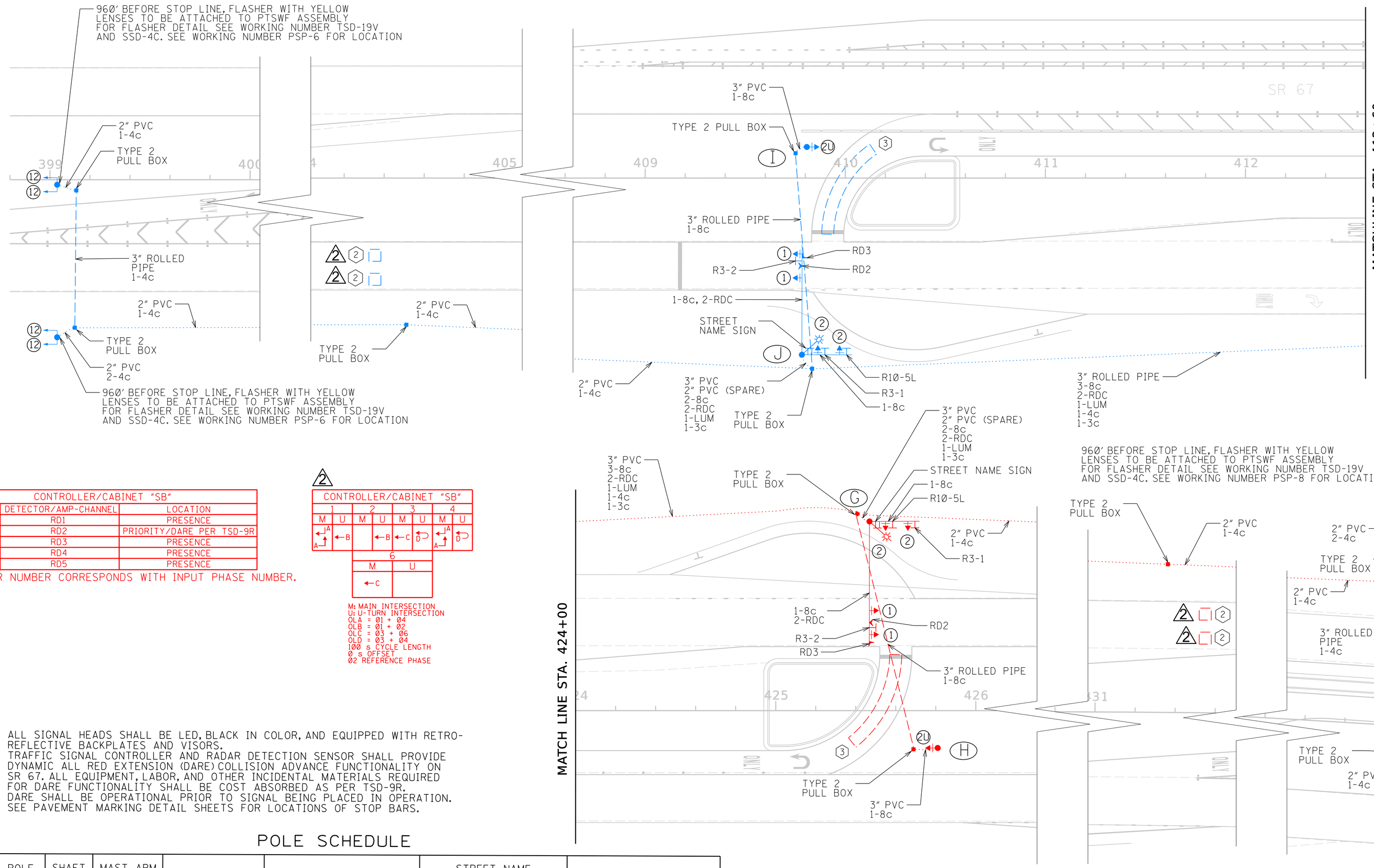

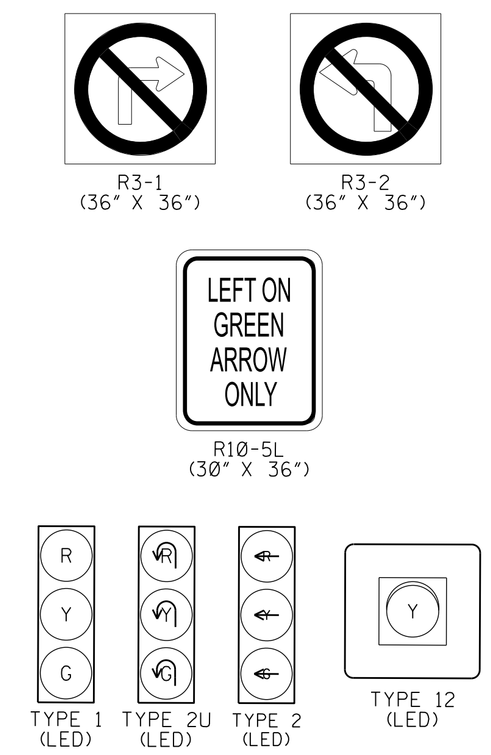

2

CONTROLLER/CABINET "SB"		
Ø/NUMBER	DETECTOR/AMP-CHANNEL	LOCATION
1	RD1	PRESENCE
2	RD2	PRIORITY/DARE PER TSD-9R
3	RD3	PRESENCE
4	RD4	PRESENCE
6	RD5	PRESENCE

DETECTOR NUMBER CORRESPONDS WITH INPUT PHASE NUMBER.

2

M: MAIN INTERSECTION
U: U-TURN INTERSECTION
OLA = Ø1 + Ø4
OLB = Ø1 + Ø2
OLC = Ø3 + Ø6
OLD = Ø3 + Ø4
100 s CYCLE LENGTH
Ø s OFFSET
Ø2 REFERENCE PHASE

NOTE:
1. ALL SIGNAL HEADS SHALL BE LED, BLACK IN COLOR, AND EQUIPPED WITH RETRO-REFLECTIVE BACKPLATES AND VISORS.
2. TRAFFIC SIGNAL CONTROLLER AND RADAR DETECTION SENSOR SHALL PROVIDE DYNAMIC ALL RED EXTENSION (DARE) COLLISION ADVANCE FUNCTIONALITY ON SR 67. ALL EQUIPMENT, LABOR, AND OTHER INCIDENTAL MATERIALS REQUIRED FOR DARE FUNCTIONALITY SHALL BE COST ABSORBED AS PER TSD-9R.
3. DARE SHALL BE OPERATIONAL PRIOR TO SIGNAL BEING PLACED IN OPERATION.
4. SEE PAVEMENT MARKING DETAIL SHEETS FOR LOCATIONS OF STOP BARS.

POLE SCHEDULE

POLE NO.	POLE TYPE	SHAFT LENGTH	MAST ARM LENGTH	DIRECTION	SPACING	STREET NAME SIGN LEGEND	*FOUNDATION
I	V	10'	-	EASTBOUND	-	-	24" X 5'
J	III (L)	30'	55'	WESTBOUND	38, 44, 47, 48, 50	-	36" X 15' W/ SLIP CASING
			25'	NORTHBOUND	4, 8, 12, 19, 22	MS HWY 67	
G	III (L)	30'	60'	EASTBOUND	45, 51, 53, 57, 60	-	36" X 15' W/ SLIP CASING
			25'	SOUTHBOUND	4, 8, 12, 19, 23	MS HWY 67	
H	V	10'	-	WESTBOUND	-	-	24" x 5'

NOTE: COST OF SERVICE POLE TO BE ABSORBED
*FOUNDATION DIAMETERS MAY NEED TO BE ADJUSTED TO ACCOMMODATE SIGNAL POLE BOLT CIRCLES. CONTRACTOR TO PROVIDE ADEQUATE COVER TO ANCHOR BOLTS, AS DICTATED BY ANCHOR BOLTS CIRCLES PROVIDED BY POLE MANUFACTURER.

0 30 60

SR 67 @ SHRINERS BLVD/LAMEY BRIDGE RD

CLAIRE E. MCKINNEY
LICENSED PROFESSIONAL ENGINEER
28988
STATE OF MISSISSIPPI
07/23/25

MDOT
MISSISSIPPI DEPARTMENT OF TRANSPORTATION

DESIGNED BY: GARVER
DETAILED BY: AS
CHECKED BY: NDT
DATE: JUL 2025

FMS CON: 108634/301000
PROJECT NO.: HSIP-0064-01(038)
COUNTY: HARRISON

TRAFFIC SIGNAL INSTALLATION
SIGNAL LAYOUT
SR 67 @ SHRINERS BLVD / LAMEY BRIDGE RD

SHEET ID
TSI-3

SHEET NO.
2003

PLAN SHEET
TSI-3.dgn
8:37:40 PM
DATE

ADDENDUM

2

CONTROLLER/CABINET "SB"		
Ø/NUMBER	DETECTOR/AMP-CHANNEL	LOCATION
1	RD1	PRESENCE
2	RD2	PRIORITY/DARE PER TSD-9R
3	RD3	PRESENCE
4	RD4	PRESENCE
6	RD5	PRESENCE

DETECTOR NUMBER CORRESPONDS WITH INPUT PHASE NUMBER.

2

M: MAIN INTERSECTION
U: U-TURN INTERSECTION
OLA = Ø1 + Ø4
OLB = Ø1 + Ø2
OLC = Ø3 + Ø6
OLD = Ø3 + Ø4
100 s CYCLE LENGTH
0 s OFFSET
Ø2 REFERENCE PHASE

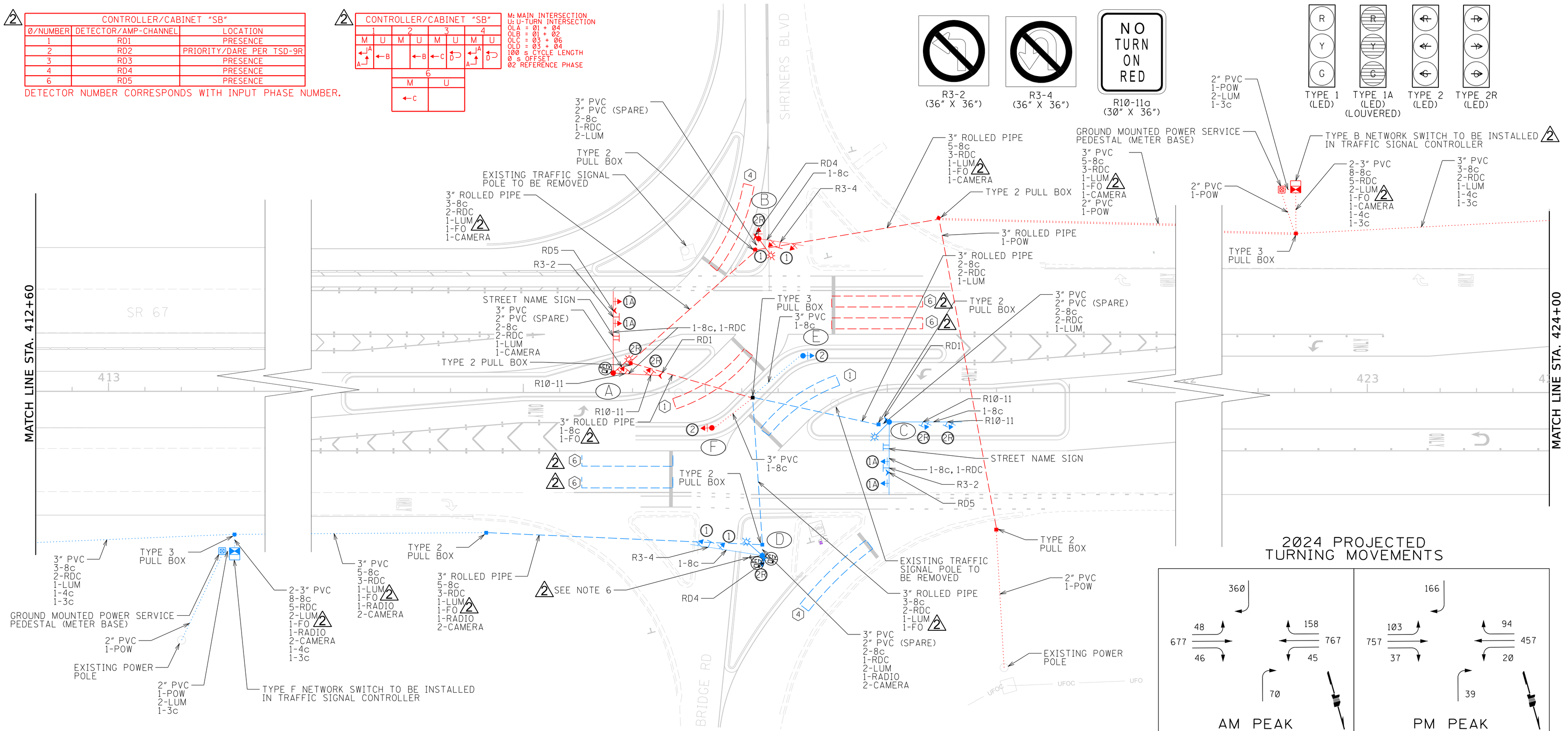

2

CONTROLLER/CABINET "NB"		
Ø/NUMBER	DETECTOR/AMP-CHANNEL	LOCATION
1	RD1	PRESENCE
2	RD2	PRIORITY/DARE PER TSD-9R
3	RD3	PRESENCE
4	RD4	PRESENCE
6	RD5	PRESENCE

DETECTOR NUMBER CORRESPONDS WITH INPUT PHASE NUMBER.

2

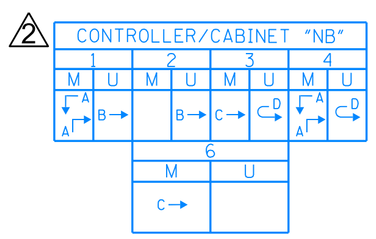

M: MAIN INTERSECTION
U: U-TURN INTERSECTION
OLA = Ø1 + Ø4
OLB = Ø1 + Ø2
OLC = Ø3 + Ø6
OLD = Ø3 + Ø4
100 s CYCLE LENGTH
0 s OFFSET
Ø2 REFERENCE PHASE

POLE SCHEDULE

POLE NO.	POLE TYPE	SHAFT LENGTH	MAST ARM LENGTH	DIRECTION	SPACING	STREET NAME SIGN LEGEND	*FOUNDATION
A	III (L)	30'	45'	EASTBOUND	19, 27, 31, 34, 39	LAMEY BRIDGE RD./ SHRINERS BLVD.	36" X 15' W/ SLIP CASING
			25'	NORTHBOUND	3, 6, 18, 21, 25	-	
B	II (L)	30'	25'	SOUTHBOUND	9, 12, 21	-	36" X 15' W/ SLIP CASING
C	III (L)	30'	40'	WESTBOUND	14, 22, 25, 28, 34	SHRINERS BLVD./ LAMEY BRIDGE RD.	36" X 15' W/ SLIP CASING
			40'	SOUTHBOUND	19, 22, 32, 35	-	
D	II (L)	2 40'**	40'	NORTHBOUND	14, 24, 30, 36	-	36" X 15' W/ SLIP CASING
E	V	10'	-	EASTBOUND	-	-	24" X 5'
F	V	10'	-	WESTBOUND	-	-	24" x 5'

NOTE: COST OF SERVICE POLE TO BE ABSORBED
*FOUNDATION DIAMETERS MAY NEED TO BE ADJUSTED TO ACCOMMODATE SIGNAL POLE BOLT CIRCLES. CONTRACTOR TO PROVIDE ADEQUATE COVER TO ANCHOR BOLTS, AS DICTATED BY ANCHOR BOLTS CIRCLES PROVIDED BY POLE MANUFACTURER.
2 **POLE D SHAFT LENGTH CONSISTS OF THE 30' TRAFFIC SIGNAL POLE SHAFT AND THE 10' POLE SHAFT EXTENSION AS MENTIONED IN NOTE 6.

2024 PROJECTED TURNING MOVEMENTS

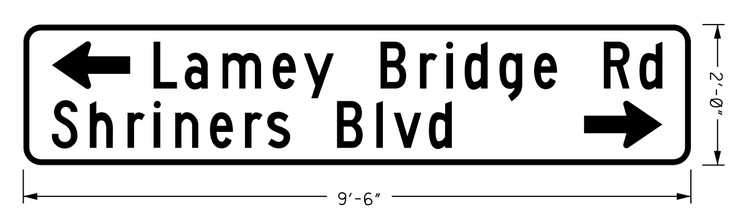

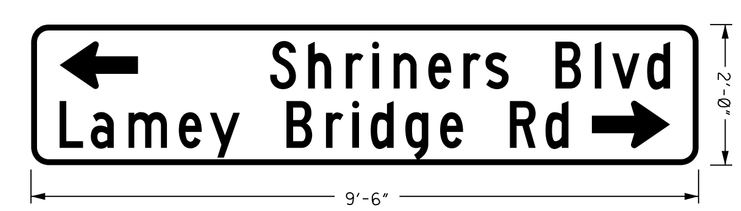

8" UPPER CASE SERIES "C"
6" LOWER CASE SERIES "C"
THICKNESS=0.1" WHITE TYPE IX SHEETING ON GREEN TYPE III SHEETING
STREET NAME SIGNS REQUIRE A MINIMUM OF 2 MOUNTING BRACKETS (30" MAXIMUM SPACING BETWEEN BRACKETS)

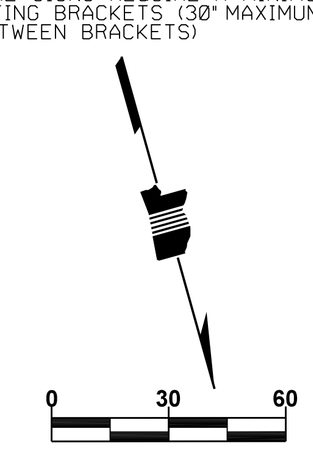

NOTES:
1. ALL SIGNAL HEADS SHALL BE LED, BLACK IN COLOR, AND EQUIPPED WITH RETRO-REFLECTIVE BACKPLATES AND VISORS.
2. DESIGN WIND SPEED FOR TRAFFIC SIGNAL POLES SHALL BE 140 MPH. ACCORDING TO 2013 AASHTO SPECIFICATIONS. USE FATIGUE CATEROGY II. USE 50 YEAR DESIGN SERVICE LIFE, AND DO NOT CONSIDER GALLOPING OR TRUCK-INDUCED GUSTS. ICE LOADS INCLUDED. TRAFFIC SIGNAL POLES SHALL BE HOT DIPPED GALVANIZED.
3. TRAFFIC SIGNAL CONTROLLER AND RADAR DETECTION SENSOR SHALL PROVIDE DYNAMIC ALL RED EXTENSION (DARE) COLLISION ADVANCE FUNCTIONALITY ON SR 67. ALL EQUIPMENT, LABOR, AND OTHER INCIDENTAL MATERIALS REQUIRED FOR DARE FUNCTIONALITY SHALL BE COST ABSORBED AS PER TSD-9R.
4. DARE SHALL BE OPERATIONAL PRIOR TO SIGNAL BEING PLACED IN OPERATION.
5. ITS CAMERA AND FIXED TYPE PTZ TO BE MOUNTED ON SIGNAL POLE SHAFT EXTENSION ON POLE D. TRAFFIC SIGNAL MONITORING CAMERA TO BE MOUNTED ON POLE A SHAFT.
2 6. SHORT RANGE RADIO TO COMMUNICATE WITH LONG RANGE RADIO TO BE INSTALLED ON LYMAN TOWER (30.528399°, -88.111985°). SHORT RANGE RADIO TO BE MOUNTED ON 10' TRAFFIC SIGNAL POLE SHAFT EXTENSION ON POLE D.
7. SEE PAVEMENT MARKING DETAIL SHEETS FOR LOCATIONS OF STOP BARS.

SR 67 @ SHRINERS BLVD/LAMEY BRIDGE RD

CLAIRE E. MCKINNEY REGISTERED PROFESSIONAL ENGINEER 28988 STATE OF MISSISSIPPI
07/23/25

MDOT MISSISSIPPI DEPARTMENT OF TRANSPORTATION

DESIGNED BY: GARVER
DETAILED BY: AS
CHECKED BY: NDT
DATE: JUL 2025

FMS CON: 108634/301000
PROJECT NO.: HSIP-0064-01(038)
COUNTY: HARRISON

TRAFFIC SIGNAL INSTALLATION
SIGNAL LAYOUT
SR 67 @ SHRINERS BLVD / LAMEY BRIDGE RD

SHEET ID TSI-4
SHEET NO. 2004

PLAN SHEET TSI-4.dgn 8:37:55 PM DATE

ADDENDUM

2024 PROJECTED TURNING MOVEMENTS

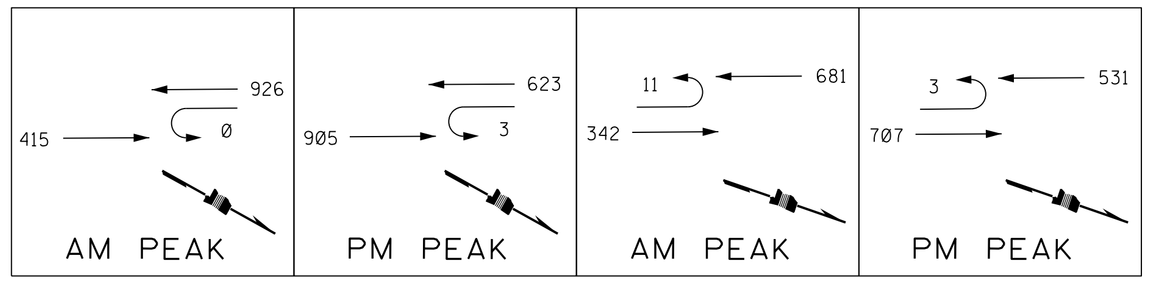

NOTES:
1. ALL SIGNAL HEADS SHALL BE LED, BLACK IN COLOR, AND EQUIPPED WITH RETRO-REFLECTIVE BACKPLATES AND VISORS.
2. TRAFFIC SIGNAL CONTROLLER AND RADAR DETECTION SENSOR SHALL PROVIDE DYNAMIC ALL RED EXTENSION (DARE) COLLISION ADVANCE FUNCTIONALITY ON SR 67. ALL EQUIPMENT, LABOR, AND OTHER INCIDENTAL MATERIALS REQUIRED FOR DARE FUNCTIONALITY SHALL BE COST ABSORBED AS PER TSD-9R.
3. DARE SHALL BE OPERATIONAL PRIOR TO SIGNAL BEING PLACED IN OPERATION.
4. SEE PAVEMENT MARKING DETAIL SHEETS FOR LOCATIONS OF STOP BARS.

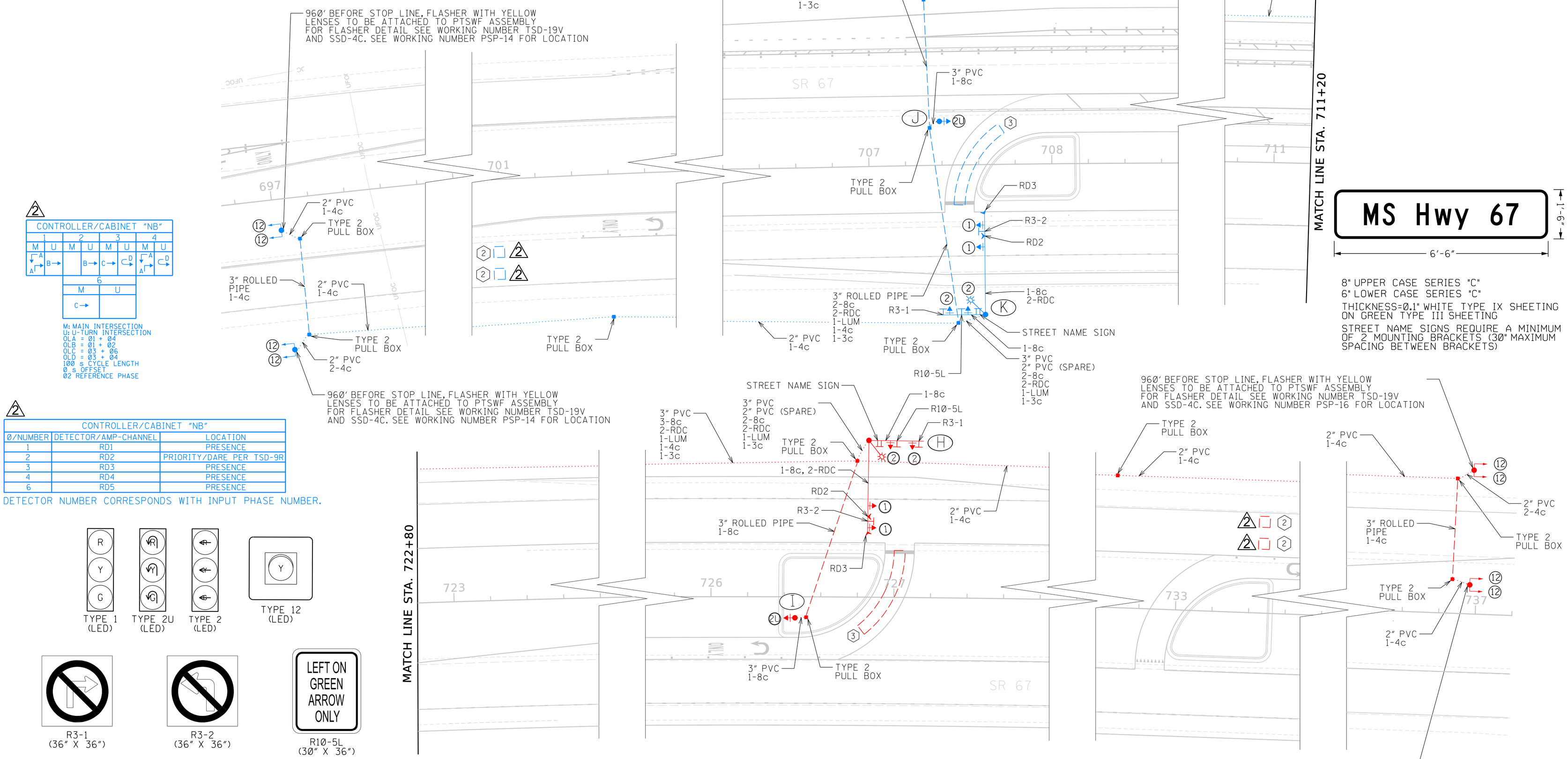

2

CONTROLLER/CABINET "NB"							
1		2		3		4	
M	U	M	U	M	U	M	U
A→ A→	B→		B→	C→	C→ D	A→ A→	C→ D
6							
M		U					
C→							

M: MAIN INTERSECTION
U: U-TURN INTERSECTION
OLA = Ø1 + Ø4
OLB = Ø1 + Ø2
OLC = Ø3 + Ø6
OLD = Ø3 + Ø4
100 s CYCLE LENGTH
Ø s OFFSET
Ø2 REFERENCE PHASE

2

CONTROLLER/CABINET "NB"		
Ø/NUMBER	DETECTOR/AMP-CHANNEL	LOCATION
1	RD1	PRESENCE
2	RD2	PRIORITY/DARE PER TSD-9R
3	RD3	PRESENCE
4	RD4	PRESENCE
6	RD5	PRESENCE

DETECTOR NUMBER CORRESPONDS WITH INPUT PHASE NUMBER.

POLE SCHEDULE

POLE NO.	POLE TYPE	SHAFT LENGTH	MAST ARM LENGTH	DIRECTION	SPACING	STREET NAME SIGN LEGEND	* FOUNDATION
H	III (L)	30'	50'	SOUTHBOUND	36, 42, 44, 48, 50	-	36" X 15' W/ SLIP CASING
			30'	WESTBOUND	6, 12, 15, 24, 27	MS HWY 67	
I	V	10'	-	NORTHBOUND	-	-	24" X 5'
J	V	10'	-	SOUTHBOUND	-	-	24" X 5'
K	III (L)	30'	55'	NORTHBOUND	37, 43, 45, 49, 55	-	36" X 15' W/ SLIP CASING
			25'	EASTBOUND	4, 10, 13, 20, 23	MS HWY 67	

NOTE: COST OF SERVICE POLE TO BE ABSORBED
* FOUNDATION DIAMETERS MAY NEED TO BE ADJUSTED TO ACCOMMODATE SIGNAL POLE BOLT CIRCLES. CONTRACTOR TO PROVIDE ADEQUATE COVER TO ANCHOR BOLTS, AS DICTATED BY ANCHOR BOLTS CIRCLES PROVIDED BY POLE MANUFACTURER.

2

CONTROLLER/CABINET "SB"		
Ø/NUMBER	DETECTOR/AMP-CHANNEL	LOCATION
1	RD1	PRESENCE
2	RD2	PRIORITY/DARE PER TSD-9R
3	RD3	PRESENCE
4	RD4	PRESENCE
6	RD5	PRESENCE

DETECTOR NUMBER CORRESPONDS WITH INPUT PHASE NUMBER.

2

CONTROLLER/CABINET "SB"							
1		2		3		4	
M	U	M	U	M	U	M	U
A→ A→	←B		←B	←C	D→	A→ A→	D→
6							
M		U					
←C							

M: MAIN INTERSECTION
U: U-TURN INTERSECTION
OLA = Ø1 + Ø4
OLB = Ø1 + Ø2
OLC = Ø3 + Ø6
OLD = Ø3 + Ø4
100 s CYCLE LENGTH
Ø s OFFSET
Ø2 REFERENCE PHASE

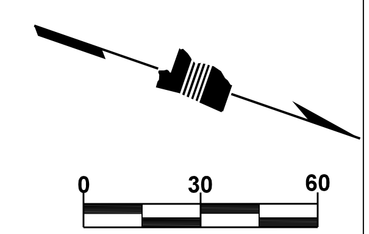

SR 67 @ TRADITION PKWY

CLAIRE E. MCKINNEY LICENSED PROFESSIONAL ENGINEER 28988 STATE OF MISSISSIPPI
07/23/25

MDOT MISSISSIPPI DEPARTMENT OF TRANSPORTATION

DESIGNED BY: GARVER
DETAILED BY: AS
CHECKED BY: NDT
DATE: JUL 2025

FMS CON: 108634/301000
PROJECT NO.: HSIP-0064-01(038)
COUNTY: HARRISON

TRAFFIC SIGNAL INSTALLATION
SIGNAL LAYOUT
SR 67 @ TRADITIONS PKWY

SHEET ID
TSI-5

SHEET NO.
2005

PLAN SHEET TSI-5.dgn 8:38:12 PM DATE

ADDENDUM

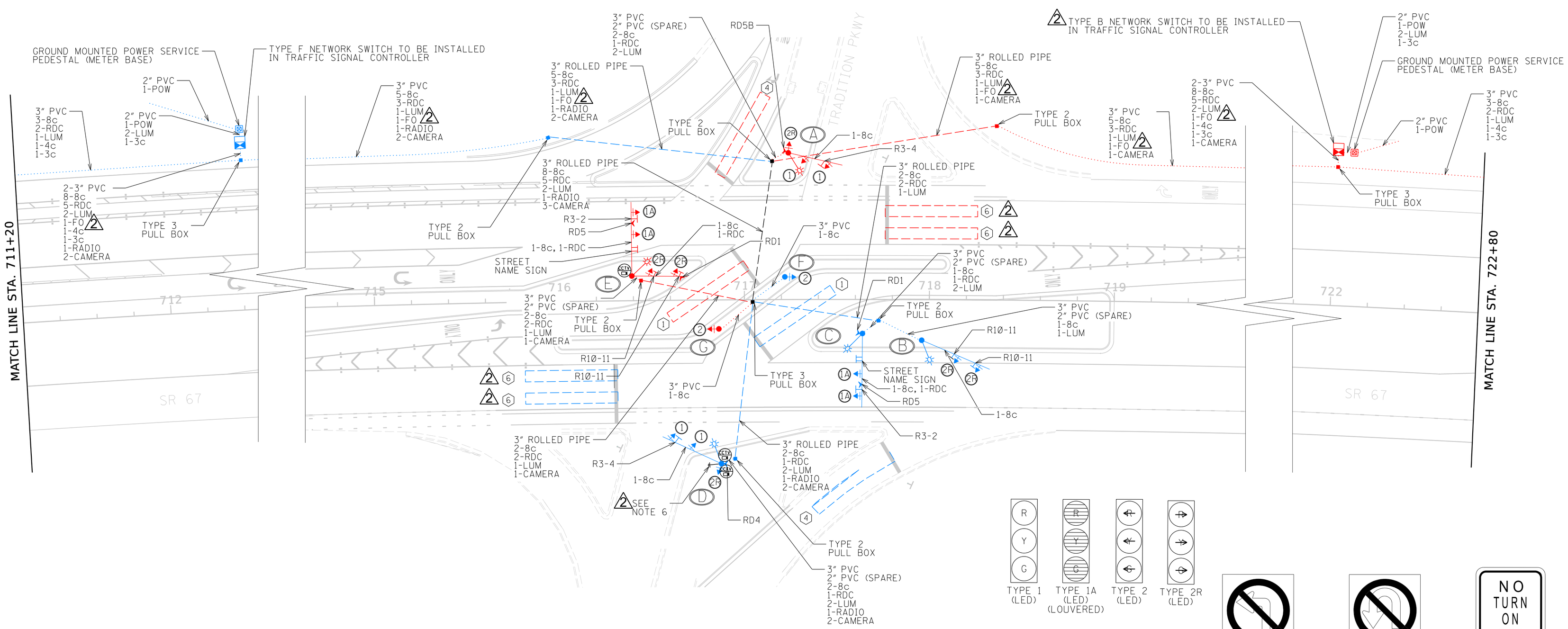

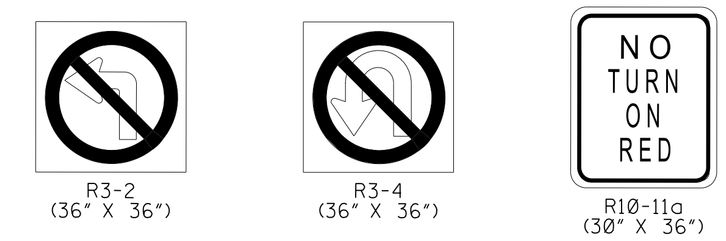

2

CONTROLLER/CABINET "SB"		
Ø/NUMBER	DETECTOR/AMP-CHANNEL	LOCATION
1	RD1	PRESENCE
2	RD2	PRIORITY/DARE PER TSD-9R
3	RD3	PRESENCE
4	RD4	PRESENCE
6	RD5	PRESENCE

DETECTOR NUMBER CORRESPONDS WITH INPUT PHASE NUMBER.

2

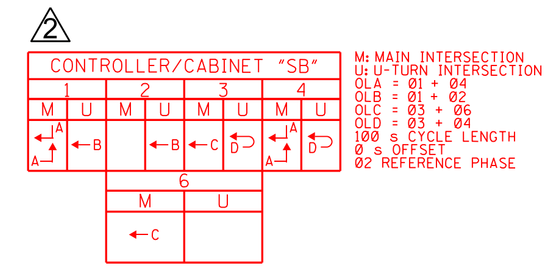

2

CONTROLLER/CABINET "NB"		
Ø/NUMBER	DETECTOR/AMP-CHANNEL	LOCATION
1	RD1	PRESENCE
2	RD2	PRIORITY/DARE PER TSD-9R
3	RD3	PRESENCE
4	RD4	PRESENCE
6	RD5	PRESENCE

DETECTOR NUMBER CORRESPONDS WITH INPUT PHASE NUMBER.

2

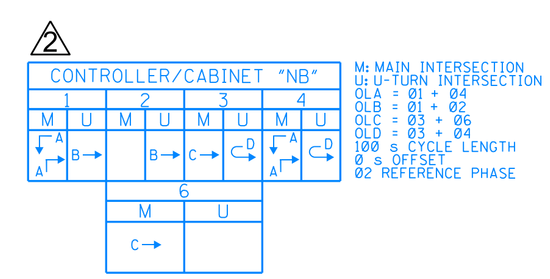

8" UPPER CASE SERIES "C"
6" LOWER CASE SERIES "C"
THICKNESS=0.1" WHITE TYPE IX SHEETING ON GREEN TYPE III SHEETING
STREET NAME SIGNS REQUIRE A MINIMUM OF 2 MOUNTING BRACKETS (30" MAXIMUM SPACING BETWEEN BRACKETS)

2024 PROJECTED TURNING MOVEMENTS

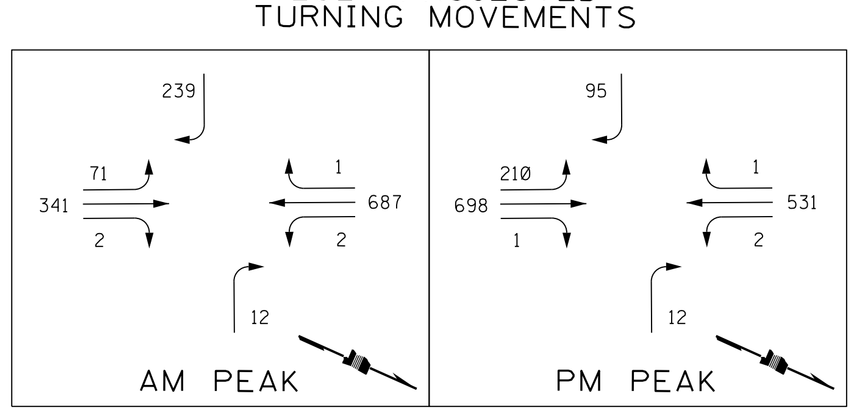

NOTES:

1. ALL SIGNAL HEADS SHALL BE LED, BLACK IN COLOR, AND EQUIPPED WITH RETRO-REFLECTIVE BACKPLATES AND VISORS.
2. DESIGN WIND SPEED FOR TRAFFIC SIGNAL POLES SHALL BE 140 MPH. ACCORDING TO 2013 AASHTO SPECIFICATIONS. USE FATIGUE CATEROGY II. USE 50 YEAR DESIGN SERVICE LIFE, AND DO NOT CONSIDER GALLOPING OR TRUCK-INDUCED GUSTS. ICE LOADS INCLUDED. TRAFFIC SIGNAL POLES SHALL BE HOT DIPPED GALVANIZED.
3. TRAFFIC SIGNAL CONTROLLER AND RADAR DETECTION SENSOR SHALL PROVIDE DYNAMIC ALL RED EXTENSION (DARE) COLLISION ADVANCE FUNCTIONALITY ON SR 67. ALL EQUIPMENT, LABOR, AND OTHER INCIDENTAL MATERIALS REQUIRED FOR DARE FUNCTIONALITY SHALL BE COST ABSORBED AS PER TSD-9R.
4. DARE SHALL BE OPERATIONAL PRIOR TO SIGNAL BEING PLACED IN OPERATION.
5. ITS CAMERA AND FIXED TYPE PTZ TO BE MOUNTED ON SIGNAL POLE SHAFT EXTENSION ON POLE D. TRAFFIC SIGNAL MONITORING CAMERA TO BE MOUNTED ON POLE E SHAFT.
2 6. SHORT RANGE RADIO TO COMMUNICATE WITH LONG RANGE RADIO TO BE INSTALLED ON MAPLE STREET RADIO SITE (30.403089°, -88.865498°). SHORT RANGE RADIO TO BE MOUNTED ON 10' TRAFFIC SIGNAL POLE SHAFT EXTENSION ON POLE D.
7. SEE PAVEMENT MARKING DETAIL SHEETS FOR LOCATIONS OF STOP BARS.

POLE SCHEDULE

POLE NO.	POLE TYPE	SHAFT LENGTH	MAST ARM LENGTH	DIRECTION	SPACING	STREET NAME SIGN LEGEND	*FOUNDATION
A	II (L)	30'	30'	WESTBOUND	11, 20, 24	-	36" X 15' W/ SLIP CASING
B	II (L)	30'	40'	WESTBOUND	19, 22, 32, 35	-	36" X 15' W/ SLIP CASING
C	II (L)	30'	40'	NORTHBOUND	14, 22, 27, 30, 34	TRADITION PKWY.	36" X 15' W/ SLIP CASING
D	II (L)	2 40'**	40'	EASTBOUND	19, 28, 31	-	36" X 15' W/ SLIP CASING
E	III (L)	30'	40'	SOUTHBOUND	14, 22, 28, 31, 34	TRADITION PKWY.	36" X 15' W/ SLIP CASING
			30'	EASTBOUND	9, 12, 23, 26, 27	-	
F	V	10'	-	SOUTHBOUND	-	-	24" X 5'
G	V	10'	-	NORTHBOUND	-	-	24" X 5'

NOTE: COST OF SERVICE POLE TO BE ABSORBED
*FOUNDATION DIAMETERS MAY NEED TO BE ADJUSTED TO ACCOMMODATE SIGNAL POLE BOLT CIRCLES. CONTRACTOR TO PROVIDE ADEQUATE COVER TO ANCHOR BOLTS, AS DICTATED BY ANCHOR BOLTS CIRCLES PROVIDED BY POLE MANUFACTURER.
2 **POLE D SHAFT LENGTH CONSISTS OF THE 30' TRAFFIC SIGNAL POLE SHAFT AND THE 10' POLE SHAFT EXTENSION AS MENTIONED IN NOTE 6.

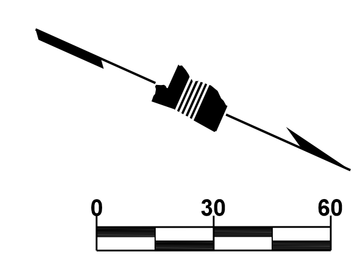

SR 67 @ TRADITION PKWY

CLAIRE E. MCKINNEY
LICENSED PROFESSIONAL ENGINEER
28988
STATE OF MISSISSIPPI
07/23/25

MDOT
MISSISSIPPI DEPARTMENT OF TRANSPORTATION

DESIGNED BY: GARVER
DETAILED BY: AS
CHECKED BY: NDT
DATE: JUL 2025

FMS CON: 108634/301000
PROJECT NO.: HSIP-0064-01(038)
COUNTY: HARRISON

1
TRAFFIC SIGNAL INSTALLATION
SIGNAL LAYOUT
SR 67 @ TRADITIONS PKWY

SHEET ID
TSI-6

SHEET NO.
2006

PLAN SHEET
TSI-6.dgn
8:38:26 PM
DATE