SECTION 905 -- PROPOSAL (CONTINUED)

I (We) hereby certify by digital signature and electronic submission via Bid Express of the Section 905 proposal below, that all certifications, disclosures and affidavits incorporated herein are deemed to be duly executed in the aggregate, fully enforceable and binding upon delivery of the bid proposal. I (We) further acknowledge that this certification shall not extend to the bid bond or alternate security which must be separately executed for the benefit of the Commission. This signature does not cure deficiencies in any required certifications, disclosures and/or affidavits. I (We) also acknowledge the right of the Commission to require full and final execution on any certification, disclosure or affidavit contained in the proposal at the Commission's election upon award. Failure to so execute at the Commission's request within the time allowed in the Standard Specifications for execution of all contract documents will result in forfeiture of the bid bond or alternate security.

Bidder acknowledges receipt of and has added to and made a part of the proposal and contract documents the following addendum (addenda):

ADDENDUM NO.	1	DATED	1/21/2026	ADDENDUM NO.		DATED	
ADDENDUM NO		DATED		ADDENDUM NO.		DATED	
ADDENDUM NO		DATED		ADDENDUM NO.		DATED	

Number	Description
1	Revised Table of Contents; Deleted NTB No. 5750; Revised Wage Rates; Added SP 907-225-1; Revised Bid Items; Revised or Added Plan Sheet Nos. REV-1, 6051, 6304, 6306, 6314, 6317-6318, 6351, 6356, 6358, 6363, 6366, 8002-8007 & 8009; Amendment EBSx Download Required.

TOTAL ADDENDA: 1
(Must agree with total addenda issued prior to opening of bids)

Respectfully Submitted,

DATE _____

_____
Contractor

BY _____
Signature

TITLE _____

ADDRESS _____

CITY, STATE, ZIP _____

PHONE _____

FAX _____

E-MAIL _____

(To be filled in if a corporation)

Our corporation is chartered under the Laws of the State of _____ and the names, titles and business addresses of the executives are as follows:

_____
President — Address

_____
Secretary — Address

_____
Treasurer — Address

The following is my (our) itemized proposal.

STBG-9585-00(001)/ 109082301000

Neshoba County(ies)

Revised 01/26/2016

For Informational Purposes Only

MISSISSIPPI DEPARTMENT OF TRANSPORTATION
TABLE OF CONTENTS

PROJECT: STBG-9585-00(001)/109082301 - Neshoba

Section 901 - Advertisement

Section 904 - Notice to Bidders

#1	Governing Specification, w/ Supplement
#2	Status of ROW, w/ Attachments
#3	Final Cleanup
#24	Exposure to Severe Sulfate Areas At or Near Ground Level
#296	Reduced Speed Limit Signs
#445	Mississippi Agent or Qualified Nonresident Agent
#516	Errata and Modifications to the 2017 Standard Specifications
#1225	Early Notice to Proceed
#1226	Material Storage Under Bridges
#1241	Fuel and Material Adjustments
#1963	Guardrail Pads
#2206	MASH Compliant Devices
#2273	Mississippi Special Fuel Tax Law
#2895	Exploratory Joint Cleanout
#2954	Reflective Sheeting for Signs
#3676	Asphalt Gyratory Compactor Internal Angle Calibration
#3963	Super Silt Fence
#4113	Unique Entity ID Requirement For Federal Funded Projects
#4702	App for Traffic Control Report
#5086	Detail of Square Tube Sign Posts
#5551	Federal Bridge Formula
#5570	Special Provisions Related to Concrete
#7480	Contract Time
#7481	Specialty Items
#7483	Underground Utilities
#7484	Temporary Construction Signs
#7485	Pile Driving Operations
#7486	Haul Roads
#7578	Obligation Date
#7580	Milestone Completion Date
#7581	Incentive Disincentive

906 Required Federal Contract Provisions -- FHWA 1273, w/Supplements

Section 907 - Special Provisions

907-101-1	Definitions and Terms
907-102-2	Bidding Requirements and Conditions
907-104-2	Minor Alterations to the Contract
907-105-2	Control of Work
907-106-4	Control of Materials
907-108-4	Subletting of Contract
907-108-6	Default and Termination of Contract

907-109-5	Measurement and Payment
907-225-1	Grassing
907-234-1	Silt Fence
907-401-2	Asphalt Pavements - General
907-403-4	Asphalt Pavements
907-413-2	Cleaning and Sealing Joints and Cracks
907-502-1	Concrete Bridge End Pavement
907-601-1	Structural Concrete
907-605-1	Underdrains
907-618-12	Traffic Control Management
907-619-5	Traffic Control for Construction Zones
907-626-12	Thermoplastic Traffic Markings
907-627-1	Raised Pavement Markings
907-700-2	Materials and Tests w/Attachment
907-701-4	Hydraulic Cement, w/ Supplement
907-702-4	Bituminous Materials
907-703-2	Gradation
907-705-1	Stone Riprap
907-707-3	Joint Materials
907-711-2	Plain Steel Wire
907-712-1	Fence and Guardrail
907-714-4	Miscellaneous Materials
907-718-1	Timber and Dimension Lumber
907-720-4	Pavement Marking Materials
907-721-4	Materials for Signing
907-799-1	Hydraulic Cement Mixtures
907-803-5	Test Piles, w/ Supplement
907-803-6	Deep Foundations
907-804-13	Concrete Bridges and Structures w/ Supplement
907-807-2	Ultra High Performance Concrete
907-823-8	Preformed Joint Seal
907-828-6	Hybrid Polymer Concrete Overlay

Section 905 - Proposal, Proposal Bid Items, Combination Bid Proposal
Certification of Performance - Prior Federal-Aid Contracts
Certification Regarding Non-Collusion, Debarment and Suspension
SAM.GOV Registration and Unique Entity ID
Section 902 - Contract Form
Section 903 - Contract Bond Forms

Pile and Driving Equipment Data Form

(REVISIONS TO THE ABOVE WILL BE INDICATED ON THE SECOND SHEET
OF SECTION 905 AS ADDENDA)

01/21/2026 07:27 AM

"General Decision Number: MS20260104 01/02/2026

Superseded General Decision Number: MS20250104

State: Mississippi

Construction Type: Highway

County: Neshoba County in Mississippi.

HIGHWAY CONSTRUCTION PROJECTS

Modification Number	Publication Date
0	01/02/2026

ELEC0917-006 12/01/2024

	Rates	Fringes
ELECTRICIAN	$ 32.45	11.05

SUMS2010-027 08/04/2014

	Rates	Fringes
CARPENTER (Form Work Only)	$ 13.02	0.00
CARPENTER, Excludes Form Work	$ 14.21	0.00
CEMENT MASON/CONCRETE FINISHER	$ 13.45	0.00
HIGHWAY/PARKING LOT STRIPING: Truck Driver (Line Striping Truck)	$ 11.23	0.00
INSTALLER - GUARDRAIL	$ 11.68	0.00
INSTALLER - SIGN	$ 12.46	0.00
IRONWORKER, REINFORCING	$ 15.28	0.00
LABORER: Asphalt, Includes Raker, Shoveler, Spreader and Distributor	$ 10.79	0.00
LABORER: Common or General	$ 10.20	0.00
LABORER: Flagger	$ 10.00	0.00
LABORER: Grade Checker	$ 10.88	0.00
LABORER: Mason Tender - Cement/Concrete	$ 11.30	0.00
LABORER: Pipelayer	$ 12.27	0.00
LABORER: Laborer-Cones/ Barricades/Barrels - Setter/Mover/Sweeper	$ 10.85	0.00
OPERATOR: Asphalt Spreader	$ 15.33	0.00
OPERATOR: Backhoe/Excavator/Trackhoe	$ 13.49	0.00

OPERATOR: Broom/Sweeper.....$ 10.17 0.00

OPERATOR: Bulldozer.....$ 14.46 0.00

OPERATOR: Concrete Saw.....$ 14.37 0.00

OPERATOR: Crane.....$ 18.35 0.00

OPERATOR: Distributor.....$ 12.00 0.00

OPERATOR: Drill.....$ 19.22 0.00

OPERATOR: Grader/Blade.....$ 15.20 0.00

OPERATOR: Loader.....$ 14.31 0.00

OPERATOR: Mechanic.....$ 15.40 0.00

OPERATOR: Milling Machine.....$ 14.96 0.00

OPERATOR: Mixer.....$ 12.42 0.00

OPERATOR: Oiler.....$ 12.33 0.48

OPERATOR: Paver (Asphalt,
Aggregate, and Concrete).....$ 12.75 0.00

OPERATOR: Piledriver.....$ 15.13 0.00

OPERATOR: Roller (All Types)....$ 11.41 0.00

OPERATOR: Scraper.....$ 12.63 0.00

OPERATOR: Tractor.....$ 9.25 0.00

OPERATOR: Trencher.....$ 13.75 0.00

SURVEYOR (Staking, Marking
and Brush Clearing).....$ 12.34 0.00

TRUCK DRIVER: Flatbed Truck.....$ 13.29 0.00

TRUCK DRIVER: Lowboy Truck.....$ 11.00 0.00

TRUCK DRIVER: Mechanic.....$ 12.00 0.00

TRUCK DRIVER: Off the Road
Truck.....$ 12.31 0.00

TRUCK DRIVER: Water Truck.....$ 9.63 0.00

TRUCK DRIVER: Dump Truck (All
Types).....$ 10.34 0.00

TRUCK DRIVER: Semi/Trailer
Truck.....$ 12.50 0.00

WELDERS - Receive rate prescribed for craft performing
operation to which welding is incidental.

==========

Note: Executive Order (EO) 13706, Establishing Paid Sick Leave

for Federal Contractors applies to all contracts subject to the Davis-Bacon Act for which the contract is awarded (and any solicitation was issued) on or after January 1, 2017. If this contract is covered by the EO, the contractor must provide employees with 1 hour of paid sick leave for every 30 hours they work, up to 56 hours of paid sick leave each year. Employees must be permitted to use paid sick leave for their own illness, injury or other health-related needs, including preventive care; to assist a family member (or person who is like family to the employee) who is ill, injured, or has other health-related needs, including preventive care; or for reasons resulting from, or to assist a family member (or person who is like family to the employee) who is a victim of, domestic violence, sexual assault, or stalking. Additional information on contractor requirements and worker protections under the EO is available at
https://www.dol.gov/agencies/whd/government-contracts.

Note: Executive Order 13658 generally applies to contracts subject to the Davis-Bacon Act that were awarded on or between January 1, 2015 and January 29, 2022, and that have not been renewed or extended on or after January 30, 2022. Executive Order 13658 does not apply to contracts subject only to the Davis-Bacon Related Acts regardless of when they were awarded. If a contract is subject to Executive Order 13658, the contractor must pay all covered workers at least $13.30 per hour (or the applicable wage rate listed on this wage determination, if it is higher) for all hours spent performing on the contract in 2025. The applicable Executive Order minimum wage rate will be adjusted annually. Additional information on contractor requirements and worker protections under Executive Order 13658 is available at
www.dol.gov/whd/govcontracts.

Unlisted classifications needed for work not included within the scope of the classifications listed may be added after award only as provided in the labor standards contract clauses (29CFR 5.5 (a) (1) (iii)).

The body of each wage determination lists the classifications and wage rates that have been found to be prevailing for the type(s) of construction and geographic area covered by the wage determination. The classifications are listed in alphabetical order under rate identifiers indicating whether the particular rate is a union rate (current union negotiated rate), a survey rate, a weighted union average rate, a state adopted rate, or a supplemental classification rate.

Union Rate Identifiers

A four-letter identifier beginning with characters other than ""SU"", ""UAVG"", ?SA?, or ?SC? denotes that a union rate was prevailing for that classification in the survey. Example: PLUM0198-005 07/01/2024. PLUM is an identifier of the union whose collectively bargained rate prevailed in the survey for this classification, which in this example would be Plumbers. 0198 indicates the local union number or district council number where applicable, i.e., Plumbers Local 0198. The next number, 005 in the example, is an internal number used in processing the wage determination. The date, 07/01/2024 in the example, is the effective date of the most current negotiated rate.

Union prevailing wage rates are updated to reflect all changes over time that are reported to WHD in the rates in the collective bargaining agreement (CBA) governing the classification.

Union Average Rate Identifiers

The UAVG identifier indicates that no single rate prevailed for those classifications, but that 100% of the data reported for the classifications reflected union rates. EXAMPLE: UAVG-OH-0010 01/01/2024. UAVG indicates that the rate is a weighted union average rate. OH indicates the State of Ohio. The next number, 0010 in the example, is an internal number used in producing the wage determination. The date, 01/01/2024 in the example, indicates the date the wage determination was updated to reflect the most current union average rate.

A UAVG rate will be updated once a year, usually in January, to reflect a weighted average of the current rates in the collective bargaining agreements on which the rate is based.

Survey Rate Identifiers

The ""SU"" identifier indicates that either a single non-union rate prevailed (as defined in 29 CFR 1.2) for this classification in the survey or that the rate was derived by computing a weighted average rate based on all the rates reported in the survey for that classification. As a weighted average rate includes all rates reported in the survey, it may include both union and non-union rates. Example: SUFL2022-007 6/27/2024. SU indicates the rate is a single non-union prevailing rate or a weighted average of survey data for that classification. FL indicates the State of Florida. 2022 is the year of the survey on which these classifications and rates are based. The next number, 007 in the example, is an internal number used in producing the wage determination. The date, 6/27/2024 in the example, indicates the survey completion date for the classifications and rates under that identifier.

?SU? wage rates typically remain in effect until a new survey is conducted. However, the Wage and Hour Division (WHD) has the discretion to update such rates under 29 CFR 1.6(c)(1).

State Adopted Rate Identifiers

The ""SA"" identifier indicates that the classifications and prevailing wage rates set by a state (or local) government were adopted under 29 C.F.R 1.3(g)-(h). Example: SAME2023-007 01/03/2024. SA reflects that the rates are state adopted. ME refers to the State of Maine. 2023 is the year during which the state completed the survey on which the listed classifications and rates are based. The next number, 007 in the example, is an internal number used in producing the wage determination. The date, 01/03/2024 in the example, reflects the date on which the classifications and rates under the ?SA? identifier took effect under state law in the state from which the rates were adopted.

WAGE DETERMINATION APPEALS PROCESS

1) Has there been an initial decision in the matter? This can be:

a) a survey underlying a wage determination
b) an existing published wage determination
c) an initial WHD letter setting forth a position on
a wage determination matter
d) an initial conformance (additional classification
and rate) determination

On survey related matters, initial contact, including requests for summaries of surveys, should be directed to the WHD Branch of Wage Surveys. Requests can be submitted via email to davisbaconinfo@dol.gov or by mail to:

Branch of Wage Surveys
Wage and Hour Division
U.S. Department of Labor
200 Constitution Avenue, N.W.
Washington, DC 20210

Regarding any other wage determination matter such as conformance decisions, requests for initial decisions should be directed to the WHD Branch of Construction Wage Determinations. Requests can be submitted via email to BCWD-Office@dol.gov or by mail to:

Branch of Construction Wage Determinations
Wage and Hour Division
U.S. Department of Labor
200 Constitution Avenue, N.W.
Washington, DC 20210

2) If an initial decision has been issued, then any interested party (those affected by the action) that disagrees with the decision can request review and reconsideration from the Wage and Hour Administrator (See 29 CFR Part 1.8 and 29 CFR Part 7). Requests for review and reconsideration can be submitted via email to dba.reconsideration@dol.gov or by mail to:

Wage and Hour Administrator
U.S. Department of Labor
200 Constitution Avenue, N.W.
Washington, DC 20210

The request should be accompanied by a full statement of the interested party's position and any information (wage payment data, project description, area practice material, etc.) that the requestor considers relevant to the issue.

3) If the decision of the Administrator is not favorable, an interested party may appeal directly to the Administrative Review Board (formerly the Wage Appeals Board). Write to:

Administrative Review Board
U.S. Department of Labor
200 Constitution Avenue, N.W.
Washington, DC 20210.

==========

END OF GENERAL DECISION
"

MISSISSIPPI DEPARTMENT OF TRANSPORTATION

SPECIAL PROVISION NO. 907-225-1 **CODE: (SP)**

DATE: **12/16/2025**

SUBJECT: **Grassing**

Section 225, Grassing, of the 2017 Edition of the Mississippi Standard Specifications for Road and Bridge Construction is hereby amended as follows.

907-225.04--Method of Measurement. Delete the first sentence of Subsection 225.04 on page 157 and replace with the following.

Grassing will be measured by the acre or the square yard.

907-225.05--Basis of Payment. Delete the first sentence of Subsection 225.05 on page 157 and replace with the following.

Grassing, measured as prescribed above, will be paid for at the contract unit price per acre or square yard, which will be full compensation for all required materials including seeding and fertilizers other than limestone, ground preparation, equipment, labor, testing and all work necessary to establish a satisfactory growth of grass.

Add the following to the list of pay items on page 157.

907-225-A: Grassing - square yard

Bridge Replacement on SR 486 (Bridge No. 1.0), known as Federal Aid Project No. STBG-9585-00(001) / 109082301 in Neshoba County.

Line No.	Item Code	Adj Code	Quantity	Units	Description [Fixed Unit Price]
				Roadway Items	
0010	201-A001		1	Lump Sum	Clearing and Grubbing
0020	202-B007		987	Square Yard	Removal of Asphalt Pavement, All Depths
0030	202-B023		1	Each	Removal of Bridge
0040	202-B052		168	Square Yard	Removal of Concrete Driveways, All Depths
0050	202-B158		200	Linear Feet	Removal of Guard Rail, Including Rails, Posts and Terminal Ends
0060	202-B191		72	Linear Feet	Removal of Pipe, 8" And Above
0070	202-B215		1	Each	Removal of Sign Including Post & Footing
0080	203-A002	(E)	208	Cubic Yard	Unclassified Excavation, LVM, AH
0090	203-G002	(E)	414	Cubic Yard	Excess Excavation, LVM, AH
0100	209-A005		856	Square Yard	Geotextile Stabilization, Type V, Non-Woven
0110	211-B001	(E)	106	Cubic Yard	Topsoil for Slope Treatment, Contractor Furnished
0120	213-C001		1	Ton	Superphosphate
0130	216-A001		36	Square Yard	Solid Sodding
0140	217-A001		222	Square Yard	Ditch Liner
0150	219-A001		1	Thousand Gallon	Watering [$20.00]
0160	220-A001		1	Acre	Insect Pest Control [$30.00]
0170	221-A001	(S)	8	Cubic Yard	Concrete Paved Ditch
0180	223-A001		1	Acre	Mowing [$70.00]
0190	224-A001		111	Square Yard	Soil Reinforcing Mat
0200	225-B001		1	Ton	Agricultural Limestone
0210	225-C001		1	Ton	Mulch, Vegetative Mulch
0220	226-A001		1	Acre	Temporary Grassing
0230	227-A001		1	Acre	Hydroseeding
0240	237-A002		37	Linear Feet	Wattles, 20"
0250	246-B001		15	Each	Rockbags
0260	249-A001		20	Ton	Riprap for Erosion Control
0270	304-B003	(GT)	72	Ton	Granular Material, Class 5, Group C
0280	304-D002	(GT)	30	Ton	Granular Material, Crushed Stone
0290	406-D001		866	Square Yard	Fine Milling of Bituminous Pavement, All Depths
0300	407-A001	(A2)	113	Gallon	Asphalt for Tack Coat
0310	501-K001		19	Square Yard	Transverse Grooving
0320	602-A001	(S)	1,178	Pounds	Reinforcing Steel
0330	603-ALT006	(S)	24	Linear Feet	24" Type A Alternate Pipe

Line No.	Item Code	Adj Code	Quantity	Units	Description [Fixed Unit Price]
0340	603-ALT009	(S)	48	Linear Feet	30" Type A Alternate Pipe
0350	605-AA001	(S)	40	Square Yard	Geotextile for Subsurface Drainage, Type III
0360	605-O002	(S)	69	Linear Feet	4" Perforated Sewer Pipe for Underdrains, SDR 23.5
0370	605-P002	(S)	5	Linear Feet	4" Non-perforated Sewer Pipe for Underdrains, SDR 23.5
0380	605-W001	(GY)	3	Cubic Yard	Filter Material for Combination Storm Drain and/or Underdrains,Type A, FM
0390	606-B001		150	Linear Feet	Guard Rail, Class A, Type 1
0400	606-D022		4	Each	Guard Rail, Bridge End Section, Type I
0410	606-E007		4	Each	Guard Rail, Terminal End Section, Non-Flared
0420	614-B001	(S)	130	Square Yard	Concrete Driveway, With Reinforcement
0430	615-A024	(S)	40	Linear Feet	Concrete Bridge End Barrier, 37.5"
0440	619-A1002		1,300	Linear Feet	Temporary Traffic Stripe, Continuous White
0450	619-A2002		1,300	Linear Feet	Temporary Traffic Stripe, Continuous Yellow
0460	619-D1001		150	Square Feet	Standard Roadside Construction Signs, Less than 10 Square Feet
0470	619-D2001		361	Square Feet	Standard Roadside Construction Signs, 10 Square Feet or More
0480	619-G4001		204	Linear Feet	Barricades, Type III, Double Faced
0490	619-G5001		20	Each	Free Standing Plastic Drums
0500	619-G7001		18	Each	Warning Lights, Type "B"
0510	620-A001		1	Lump Sum	Mobilization
0520	630-A001		12	Square Feet	Standard Roadside Signs, Sheet Aluminum, 0.080" Thickness
0530	630-A003		18	Square Feet	Standard Roadside Signs, Sheet Aluminum, 0.125" Thickness
0540	630-C005		66	Linear Feet	Square Tube Posts, 2.0 lb/ft
0550	630-F006		16	Each	Delineators, Guard Rail, White
0560	630-G004		4	Each	Type 3 Object Markers, OM-3R or OM-3L
0570	699-A001		1	Lump Sum	Roadway Construction Stakes
0580	815-B001	(S)	62	Square Yard	Grouted Riprap
0590	815-F002	(S)	20	Ton	Sediment Control Stone
0600	907-225-A001		1,550	Square Yard	Grassing
0610	907-234-A001		900	Linear Feet	Temporary Silt Fence
0620	907-234-C001		150	Linear Feet	Super Silt Fence
0630	907-403-A003	(BA1)	96	Ton	12.5-mm, ST, Asphalt Pavement
0640	907-403-A006	(BA1)	130	Ton	19-mm, ST, Asphalt Pavement
0650	907-403-A015	(BA1)	141	Ton	9.5-mm, ST, Asphalt Pavement
0660	907-403-B012	(BA1)	66	Ton	9.5-mm, ST, Asphalt Pavement, Leveling

Line No.	Item Code	Adj Code	Quantity	Units	Description [Fixed Unit Price]
0670	907-403-C003	(BA1)	20	Ton	19-mm, ST, Asphalt Pavement, Trench Widening
0680	907-413-E001		54	Linear Feet	Sawing and Sealing Transverse Joints in Asphalt Pavement
0690	907-502-A001	(C)	130	Square Yard	Reinforced Cement Concrete Bridge End Pavement
0700	907-601-B001	(S)	18	Cubic Yard	Class "B" Structural Concrete, Minor Structures
0710	907-618-A001		1	Lump Sum	Maintenance of Traffic
0720	907-619-E3001		4	Each	Changeable Message Sign
0730	907-626-C011		1,300	Linear Feet	6" Thermoplastic Double Drop Edge Stripe, Continuous White
0740	907-626-E004		1,300	Linear Feet	6" Thermoplastic Double Drop Traffic Stripe, Continuous Yellow
0750	907-627-L001		18	Each	Two-Way Yellow Reflective High Performance Raised Markers
			ALTERNATE GROUP AA NUMBER 1		
0760	304-F001	(GT)	329	Ton	3/4" and Down Crushed Stone Base
			ALTERNATE GROUP AA NUMBER 2		
0770	304-F002	(GT)	329	Ton	Size 610 Crushed Stone Base
			ALTERNATE GROUP AA NUMBER 3		
0780	304-F003	(GT)	329	Ton	Size 825B Crushed Stone Base
			ALTERNATE GROUP BB NUMBER 1		
0790	605-W002	(GY)	44	Cubic Yard	Filter Material for Combination Storm Drain and/or Underdrains,Type B, FM
			ALTERNATE GROUP BB NUMBER 2		
0800	605-W003	(GY)	44	Cubic Yard	Filter Material for Combination Storm Drain and/or Underdrains,Type C, FM
			Bridge Items		
0810	803-D004	(S)	825	Linear Feet	HP 12 x 84 Steel Piling
0820	803-D007	(S)	1,375	Linear Feet	HP 14 x 89 Steel Piling
0830	804-C275	(S)	224	Linear Feet	25' Prestressed Concrete Beam, Type NEXT 18D
0840	805-A001	(S)	10,149	Pounds	Reinforcement
0850	813-A004	(S)	150	Linear Feet	Concrete Railing, 36"
0860	815-A007	(S)	497	Ton	Loose Riprap, Size 300
0870	815-E001	(S)	458	Square Yard	Geotextile under Riprap
0880	907-803-B001	(S)	1	Each	Conventional Static Pile Load Test [$5,000.00]
0890	907-803-I003	(S)	2	Each	PDA Test Pile, HP Steel Pile
0900	907-803-J001	(S)	2	Each	Pile Restrike
0910	907-804-A002	(S)	53	Cubic Yard	Bridge Concrete, Class AA
0920	907-807-A001		3	Cubic Yard	Ultra-High Performance Concrete
0930	907-823-A001		114	Linear Feet	Preformed Joint Seal, Type I
0940	907-828-A001	(S)	6	Cubic Yard	Hybrid Polymer Concrete Overlay

SUMMARY OF REVISIONS

REV. NO.	DATE	1ST ORDER	ADDENDUM	2ND ORDER	INITIALS	SHEET ID.	DESCRIPTION
1	11/20/2025	X			DMB	SQS-2	ADJUSTED QUANTITY
2	12/9/2025	X			DMB	SQS-1	ADDED FOOTNOTE
3	12/15/2025	X			DMB	TITLE, SQS-1	CHANGED STORM WATER PERMIT BLOCK AND ADDED PAY ITEM
4	1/13/2026		X		TG	PM-1, SN-3A, SN-4, SN-8,	UPDATED STANDARDS
						SN-8C, SN-9, TCP-1, TCP-6.	
						TCP-8, TCP-13, TCP-16	

ADDENDUM

DESIGNED BY:

DETAILED BY:

CHECKED BY:

DATE:

FMS CON: 109082/301000

PROJECT NO.: STBG-9585-00(001)

COUNTY: NESHOBA

SUMMARY OF REVISIONS

SHEET ID
REV-1

SHEET NO.

STATE	PROJECT NO.
MISS.	

ADDENDUM

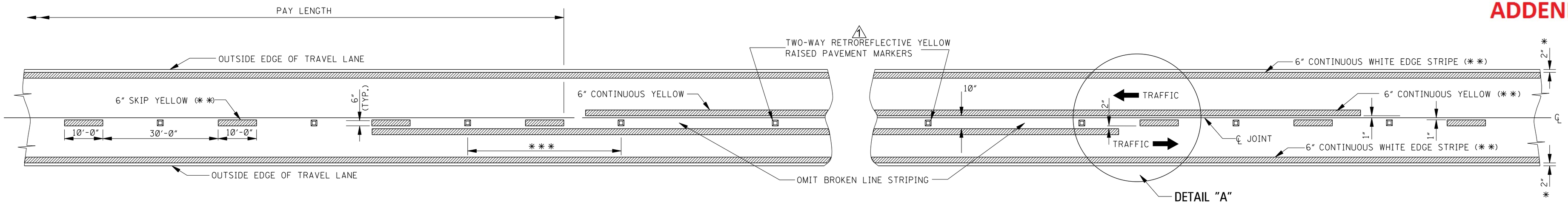

TWO–WAY TRAFFIC
(ASPHALT OR CONCRETE PAVEMENT)

NOTE: THE CRITERIA FOR NO-PASSING ZONES CAN BE FOUND IN THE MDOT ROADWAY DESIGN MANUAL, SECTION 11-1.01.

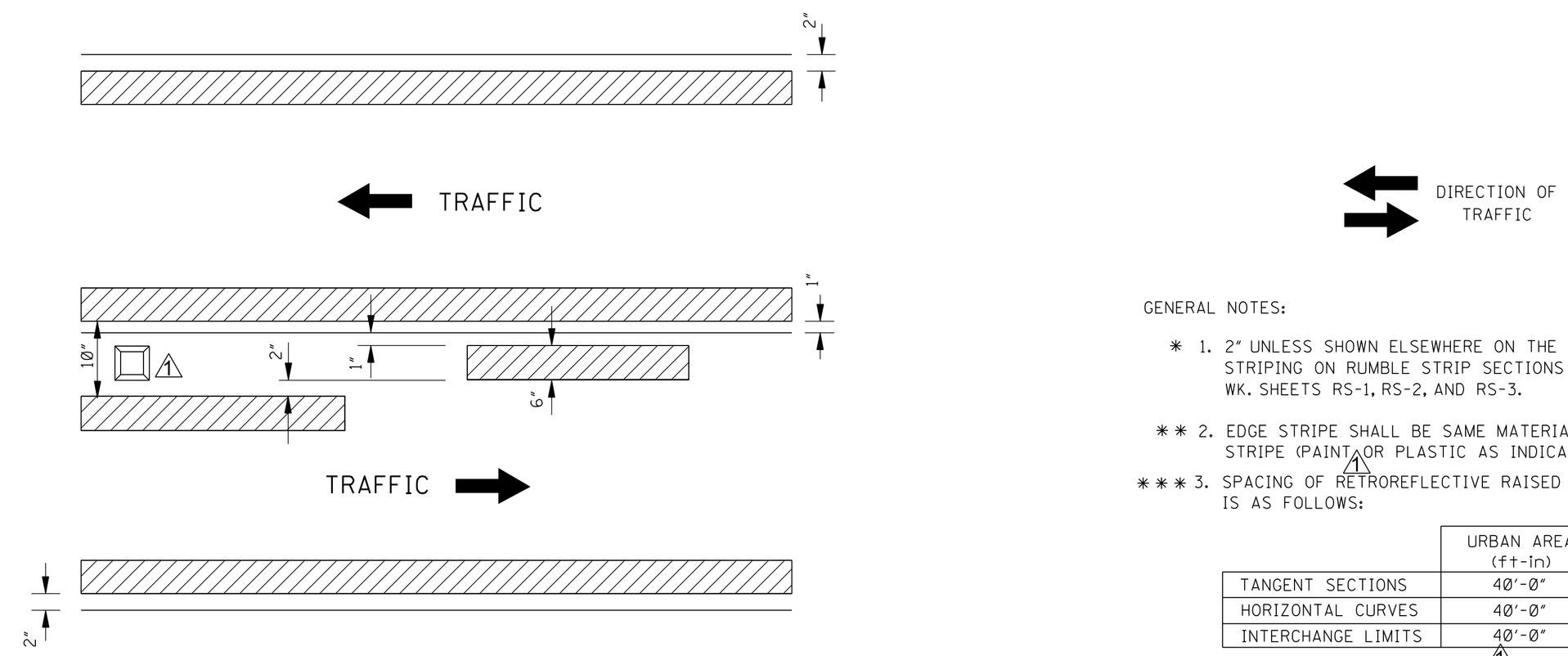

DETAIL "A"

GENERAL NOTES:

* 1. 2" UNLESS SHOWN ELSEWHERE ON THE PLANS. FOR STRIPING ON RUMBLE STRIP SECTIONS REFER TO WK. SHEETS RS-1, RS-2, AND RS-3.

** 2. EDGE STRIPE SHALL BE SAME MATERIAL AS LANE-LINE STRIPE (PAINT OR PLASTIC AS INDICATED IN PAY ITEMS).

*** 3. SPACING OF RETROREFLECTIVE RAISED PAVEMENT MARKERS IS AS FOLLOWS:

	URBAN AREA (ft-in)	RURAL AREA (ft-in)
TANGENT SECTIONS	40'-0"	80'-0"
HORIZONTAL CURVES	40'-0"	40'-0"
INTERCHANGE LIMITS	40'-0"	† 40'-0"

† NOTE: ON THE MAIN FACILITY, RETROREFLECTIVE RED-CLEAR RAISED PAVEMENT MARKERS ON A 40'-0" SPACING WILL BE REQUIRED ON LANE-LINE(S) THROUGH ALL INTERCHANGE AREAS BEGINNING 1000' IN ADVANCE (IN DIRECTION OF TRAFFIC) OF THE EXIT RAMP TAPER AND CONTINUING THROUGH THE INTERCHANGE TO THE END OF THE ENTRANCE RAMP TAPER.

4. PAVEMENT MARKERS SHALL BE HIGH PERFORMANCE RETROREFLECTIVE RAISED PAVEMENT MARKERS AS LISTED IN THE MDOT "APPROVED PRODUCTS LIST."

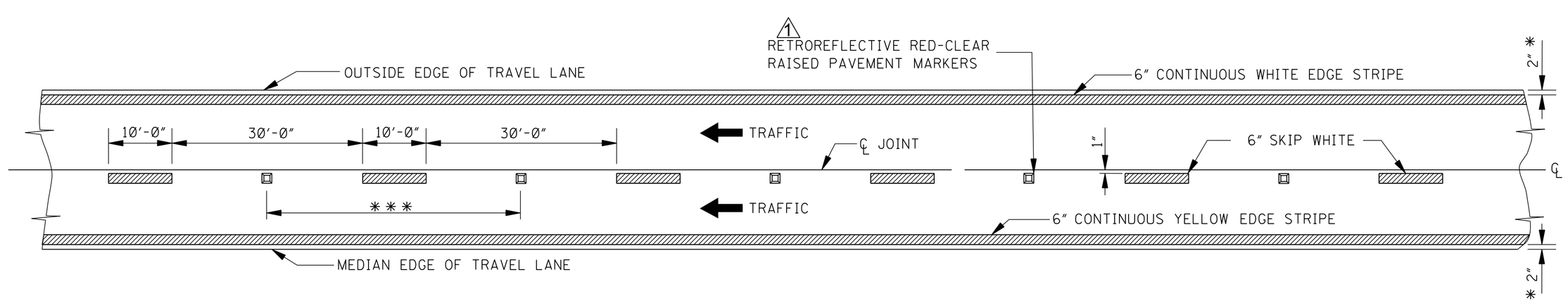

4–LANE WITH ONE–WAY TRAFFIC

DATE	REVISION	BY	STN
12/11/25	REVISE RPMS AND TEXT		

MISSISSIPPI DEPARTMENT OF TRANSPORTATION
ROADWAY DESIGN DIVISION
STANDARD PLAN

PAVEMENT MARKING DETAILS FOR 2–LANE AND 4–LANE DIVIDED ROADWAYS

MDOT MISSISSIPPI DEPARTMENT OF TRANSPORTATION

WORKING NUMBER PM-1

ISSUE DATE: AUGUST 01, 2017

SHEET NUMBER 6051

ADDENDUM

STATE	PROJECT NO.
MISS.	

SIGN NUMBER	R1-1		R1-2			R2-1			R2-4a	R3-1		R3-2		R3-4		R3-5	R4-3	
ALUMINUM (6061-T6) SIGN BLANK THICKNESS	0.100″	0.125″	0.080″	0.100″	0.125″	0.080″	0.100″	0.125″	0.125″	0.080″	0.100″	0.080″	0.100″	0.080″	0.100″	0.080″	0.100″	0.125″
LEGEND	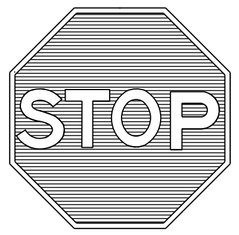		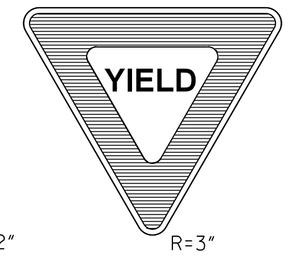 R=2″ R=3″		R=4″	R=1½″	R=2¼″	R=3″	R=3″	R=1½″	R=2¼″	R=1½″	R=2¼″	R=1½″	R=2¼″	R=1⅞″	R=2¼″ R=3″	
LETTER & NUMERAL SERIES	12″ SERIES"C"	16″ SERIES"C"	3″ SERIES "C"		5″ SERIES "C"	4″ SERIES "E" 4″ SERIES "E" 10″ SERIES "E"	6″ SERIES "E" 6″ SERIES "E" 14″ SERIES "E"	8″ SERIES "E" 8″ SERIES "E" 16″ SERIES "E"	8″ SERIES "E" 16″ SERIES "E" 8″ SERIES "C" 14″ SERIES "D"							6″ SERIES "D"	6″ SERIES "D"	8″ SERIES "D"
WIDTH OF BORDER INSIDE OUTSIDE	⅞″ WHITE	1¼″ WHITE	5″ RED ¾″ WHITE	6″ RED 1″ WHITE	8″ RED 1½″ WHITE	⅝″ BLACK ⅜″ WHITE	⅞″ BLACK ⅝″ WHITE	1¼″ BLACK ¾″ WHITE	⅞″ BLACK ¾″ WHITE	⅝″ BLACK ⅜″ WHITE	⅞″ BLACK ⅝″ WHITE	⅝″ BLACK ⅜″ WHITE	⅞″ BLACK ⅝″ WHITE	⅝″ BLACK ⅜″ WHITE	⅞″ BLACK ⅝″ WHITE	¾″ BLACK ½″ WHITE	⅞″ BLACK ⅝″ WHITE	1¼″ BLACK ¾″ WHITE
SIZE (WIDTH X HEIGHT)	36″ OCTAGON	48″ OCTAGON	36″ EQUIL. TRIANGLE	48″ EQUIL. TRIANGLE	60″ EQUIL. TRIANGLE	24″ X 30″	36″ X 48″	48″ X 60″	48″ X 96″	24″ X 24″	36″ X 36″	24″ X 24″	36″ X 36″	24″ X 24″	36″ X 36″	30″ X 36″	36″ X 48″	48″ X 60″
COLORS COPY BACKGROUND	WHITE RED	WHITE RED	RED WHITE	RED WHITE	RED WHITE	BLACK WHITE	BLACK WHITE	BLACK WHITE	BLACK WHITE	BLACK & RED WHITE	BLACK & RED WHITE	BLACK & RED WHITE	BLACK & RED WHITE	BLACK & RED WHITE	BLACK & RED WHITE	BLACK WHITE	BLACK WHITE	BLACK WHITE
REFLECTORIZATION	ALL	ALL	ALL	ALL	ALL	B'GROUND	B'GROUND	B'GROUND	BACKGROUND	BACKGROUND, CIRCLE, & DIAG.	BACKGROUND, CIRCLE, & DIAG.	BACKGROUND, CIRCLE, & DIAG.	BACKGROUND, CIRCLE, & DIAG.	BACKGROUND, CIRCLE, & DIAG.	BACKGROUND, CIRCLE, & DIAG.	BACKGROUND	BACKGROUND	BACKGROUND
NUMBER OF POSTS FOR MOUNTING	1	1	1	1	1	1	1	1	1	1	1	1	1	1	1	1	1	1
NUMBER OF HOLES TO BE PUNCHED (⅜″ DIA.)	2	4	2	4	4	2	4	6	10	2	2	2	2	2	2	2	4	6
PUNCHING DISTANCE FROM EACH VERTICAL EDGE	18″ (VERT. CENTER)	9″	18″ (VERT. CENTER)	12″ (FROM CENTER)	15″ (FROM CENTER)	12″ (VERT. CENTER)	3″	9″	9″	12″ (VERT. CENTER)	18″ (VERT. CENTER)	12″ (VERT. CENTER)	18″ (VERT. CENTER)	12″ (VERT. CENTER)	18″ (VERT. CENTER)	15″ (VERT. CENTER)	3″	9″
PUNCHING DISTANCE FROM TOP EDGE	3″; 33″	9″; 39″	3″; 27″	3″; 15″	3″; 21″	3″; 27″	9″; 39″	4″; 30″; 56″	4″; 28″; 52″; 60″; 92″	3″; 21″	6″; 30″	3″; 21″	6″; 30″	3″; 21″	6″; 30″	6″; 30″	9″; 39″	4″; 30″; 56″

SIGN NUMBER	R4-7			R6-3	R5-1		R5-1a	R6-1L, R6-1R	R6-2L, R6-2R	R8-4		R11-1	
ALUMINUM (6061-T6) SIGN BLANK THICKNESS	0.080″	0.125″		0.080″	0.100″	0.125″	0.100″	0.080″	0.080″	0.080″	0.100″	0.125″	0.125″
LEGEND	R=1½″	R=2¼″	R=3″	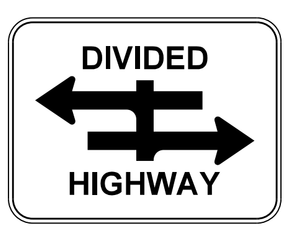	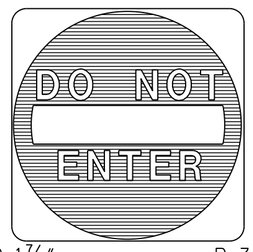 R=1⅞″	R=3″	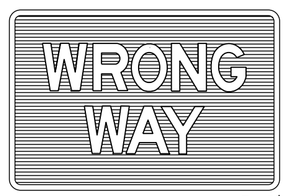 R=2¼″	R=1½″	R=1½″	R=2¼″		R=3″	
LETTER & NUMERAL SERIES					4″ SERIES "D"	6″ SERIES "D"	8″ SERIES "D"	4″ SERIES "D"	6″ SERIES "D"	4″ SERIES "D"	6″ SERIES "D"	8″ SERIES "C"	10″ SERIES "C"
WIDTH OF BORDER INSIDE OUTSIDE	⅝″ BLACK ⅜″ WHITE	⅞″ BLACK ⅝″ WHITE	1¼″ BLACK ¾″ WHITE	⅝″ BLACK ⅜″ WHITE	WHITE OUT-SIDE BORDER	WHITE OUT-SIDE BORDER	1″ WHITE	½″ WHITE	⅝″ BLACK ⅜″ WHITE	⅝″ BLACK ⅜″ WHITE	⅞″ BLACK ⅝″ WHITE	⅞″ BLACK ⅝″ WHITE	1¼″ BLACK ¾″ WHITE
SIZE (WIDTH X HEIGHT)	24″ X 30″	36″ X 48″	48″ X 60″	30″ X 24″	36″ X 36″	48″ X 48″	42″ X 30″	36″ X 12″	24″ X 30″	30″ X 24″	48″ X 36″	36″ X 48″	48″ X 60″
COLORS COPY BACKGROUND	BLACK WHITE	BLACK WHITE	BLACK WHITE	BLACK WHITE	WHITE RED	WHITE RED	WHITE RED	BLACK (WHITE ARROW) BLACK	BLACK WHITE	BLACK WHITE	BLACK WHITE	BLACK WHITE	BLACK WHITE
REFLECTORIZATION	BACKGROUND	BACKGROUND	BACKGROUND	BACKGROUND	ALL	ALL	ALL	ARROW & BORDER	BACKGROUND	BACKGROUND	BACKGROUND	BACKGROUND	BACKGROUND
NUMBER OF POSTS FOR MOUNTING	1	1	1	1	1	1	1	1	1	1	2	1	1
NUMBER OF HOLES TO BE PUNCHED (⅜″ DIA.)	2	4	6	2	2	4	4	2	2	2	4	4	6
PUNCHING DISTANCE FROM EACH VERTICAL EDGE	12″ (VERT. CENTER)	3″	9″	15″ (VERT. CENTER)	18″ (VERT. CENTER)	9″	9″	18″ (VERT. CENTER)	12″ (VERT. CENTER)	15″ (VERT. CENTER)	9″	3″	9″
PUNCHING DISTANCE FROM TOP EDGE	3″; 27″	9″; 39″	4″; 30″; 56″	3″; 21″	6″; 30″	4″; 44″	3″; 27″	1½″; 10½″	3″; 27″	3″; 21″	3″; 33″	9″; 39″	4″; 30″; 56″

GENERAL NOTES:

1. THE QUANTITIES LISTED ON THE SUMMARY OF QUANTITIES SHEET FOR THE SIGNS SHOWN ON THIS SHEET WILL BE USED AS THE BASIS FOR FINAL PAYMENT, EXCEPT WHERE SIGNS ARE MODIFIED FROM THAT SHOWN.

2. THE SPEED LIMITS REQUIRED ON SIGNS R2-1 AND R2-4a WILL BE SHOWN ON INDIVIDUAL PLAN SHEETS.

△1 3. THE DESIGN OF ALL STANDARD ROADSIDE SIGNS SHALL CONFORM TO THE CRITERIA IN THE LATEST VERSION OF THE STANDARD HIGHWAY SIGNS MANUAL IN CONJUNCTION WITH THE LATEST VERSION OF THE MUTCD.

DATE	REVISION	BY
12/11/25	REVISED TEXT	STN

MISSISSIPPI DEPARTMENT OF TRANSPORTATION
ROADWAY DESIGN DIVISION
STANDARD PLAN

STANDARD ROADSIDE SIGNS

MDOT MISSISSIPPI DEPARTMENT OF TRANSPORTATION

WORKING NUMBER SN-3A

ISSUE DATE: AUGUST 01, 2017

SHEET NUMBER 6304

ADDENDUM

STATE	PROJECT NO.
MISS.	

ROADSIDE SIGN IN RURAL AREA

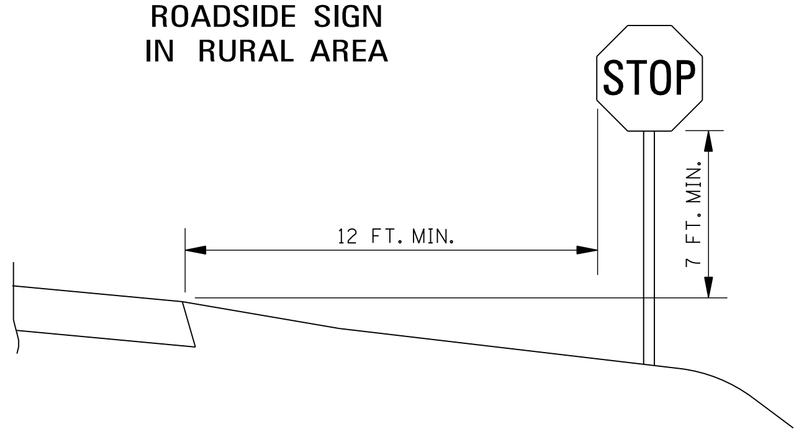

ROADSIDE SIGN IN RURAL AREA

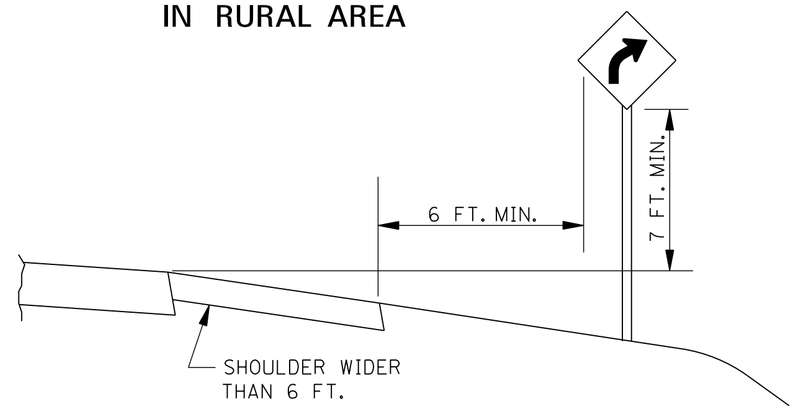

ROADSIDE SIGN IN BUSINESS, COMMERCIAL, OR RESIDENTIAL AREA

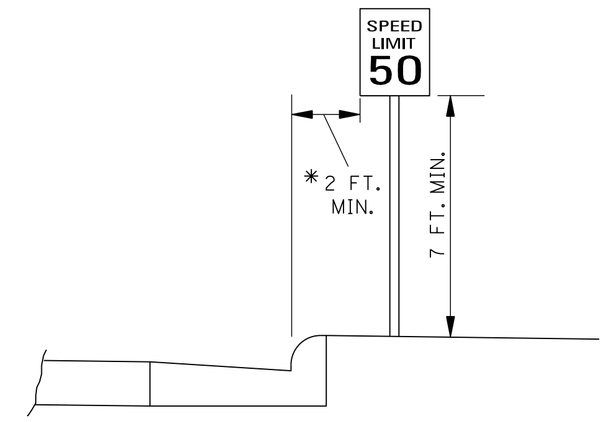

△1 * THE 2 FT. MINIMUM OFFSET APPLIES ONLY TO STANDARD SIGNS MOUNTED ON U-POSTS OR SQUARE TUBE POSTS. ALL STANDARD SIGNS MOUNTED ON PIPE WILL BE OFFSET A MINIMUM OF 4 FT FROM FACE OF CURB. RAMP DESTINATION SIGNS WILL BE OFFSET 4 FT. FROM THE SHOULDER BREAK.

WARNING SIGN WITH ADVISORY SPEED PLAQUE IN RURAL AREA

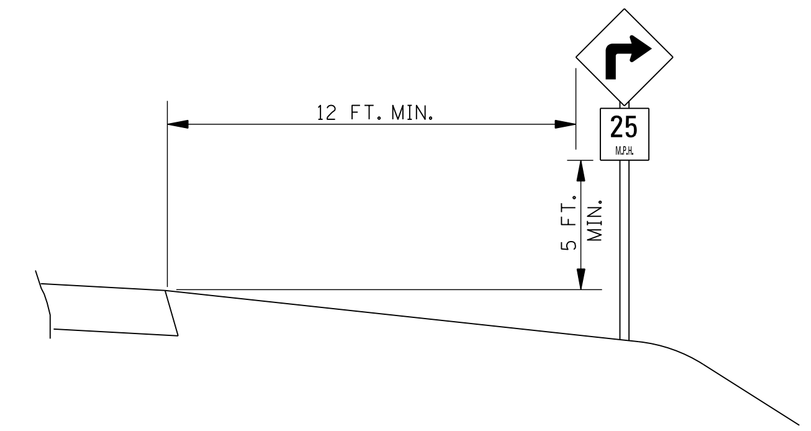

ROADSIDE ASSEMBLY IN RURAL AREA

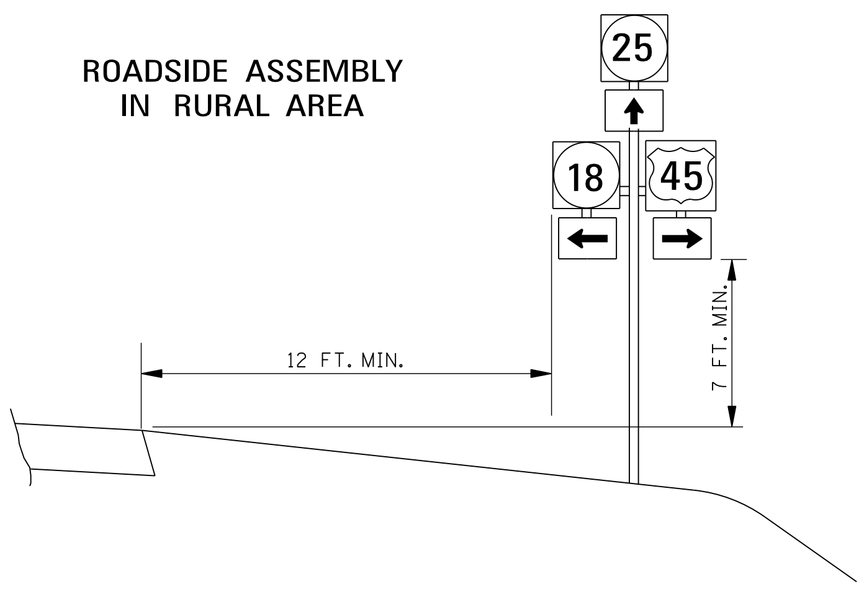

INTERSTATE OR FREEWAY SIGN WITH SECONDARY SIGN

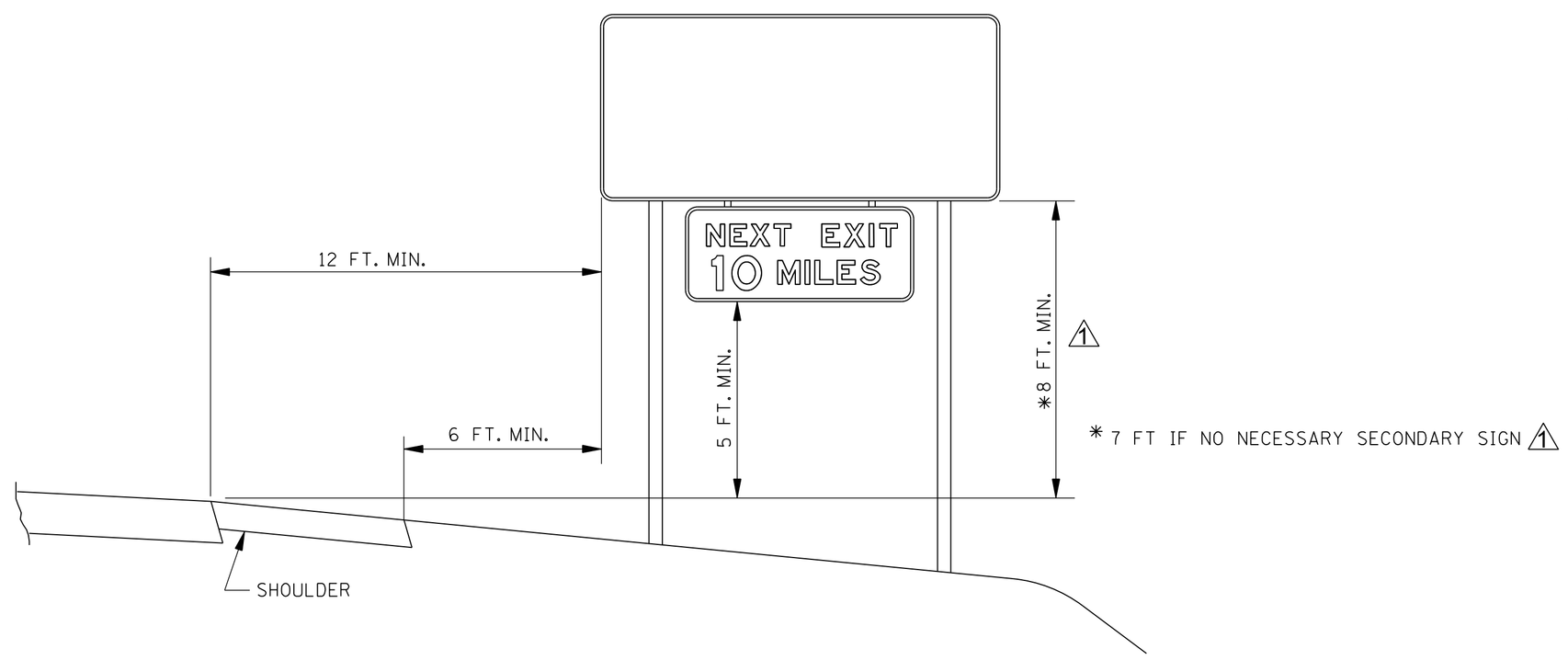

OVERHEAD SIGN

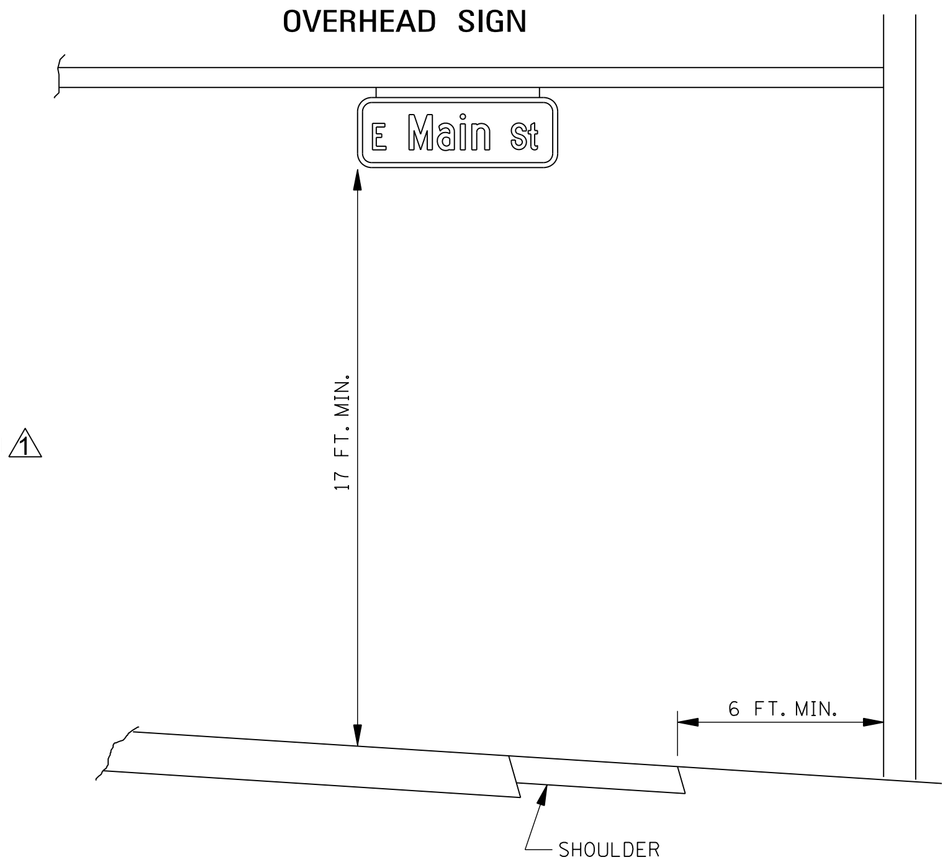

SIGN ON NOSE OF MEDIAN

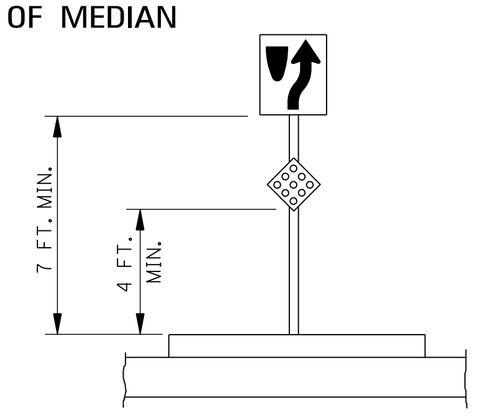

SIGNS IN ISLANDS OR BEHIND CURB USING U-POSTS OR PIPE POSTS

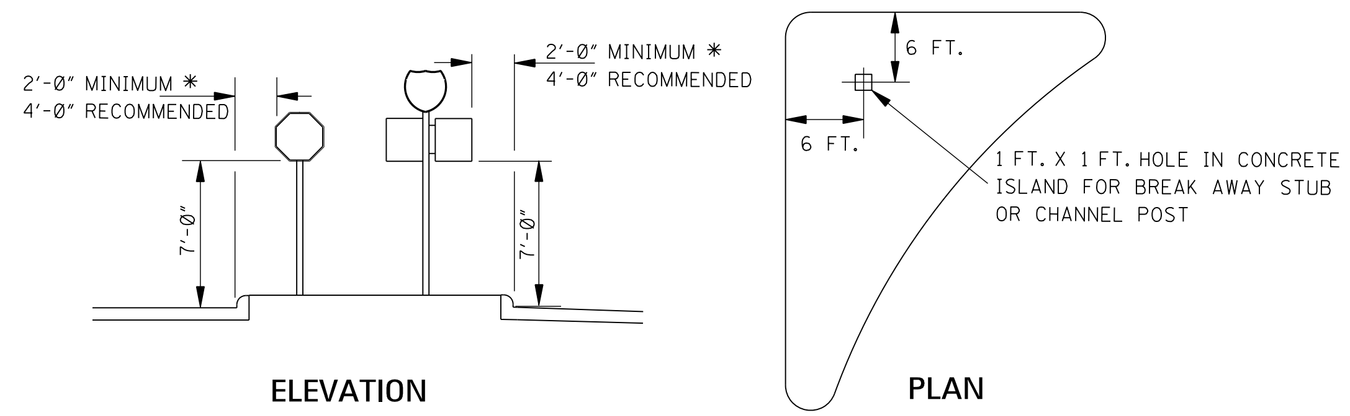

△1 * THE 2 FT. MINIMUM OFFSET APPLIES ONLY TO STANDARD SIGNS MOUNTED ON U-POSTS. ALL STANDARD SIGNS MOUNTED ON PIPE WILL BE OFFSET A MINIMUM OF 4 FT. RAMP DESTINATION SIGNS WILL BE OFFSET 4 FT. FROM THE SHOULDER BREAK.

GENERAL NOTES:

△1 1. SEE SECTION 2A-16 OF THE MUTCD FOR REDUCED LATERAL OFFSET DISTANCES THAT MAY BE USED IN AREAS WHERE LATERAL OFFSETS ARE LIMITED, AND IN BUSINESS, COMMERCIAL, OR RESIDENTIAL AREAS WHERE SIDEWALK WIDTH IS LIMITED OR WHERE EXISTING POLES ARE CLOSE TO THE CURB.

2. SIGNS SHALL BE LOCATED OUTSIDE THE CLEAR ZONE UNLESS PLACED ON A BREAKAWAY OR YIELDING SUPPORT.

△1	12/11/25	REVISED TEXT	STN
	DATE	REVISION	BY

MISSISSIPPI DEPARTMENT OF TRANSPORTATION
ROADWAY DESIGN DIVISION
STANDARD PLAN

STANDARD ROADSIDE SIGN ASSEMBLY AND INSTALLATION

MDOT MISSISSIPPI DEPARTMENT OF TRANSPORTATION

WORKING NUMBER SN-4

ISSUE DATE: AUGUST 01, 2017

SHEET NUMBER 6306

STATE	PROJECT NO.
MISS.	

ADDENDUM

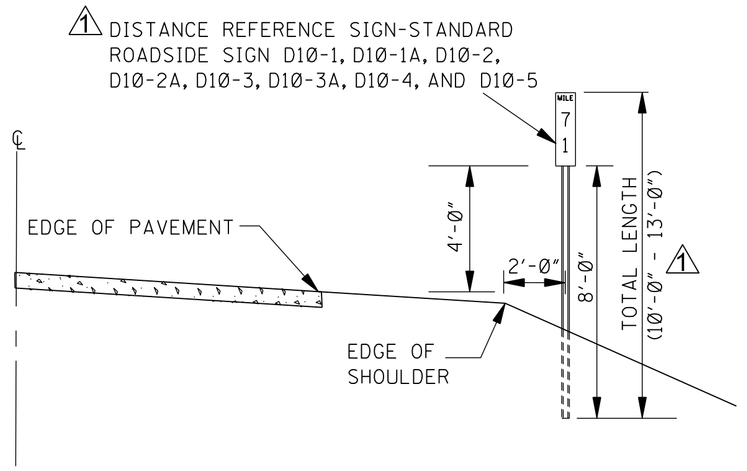

DISTANCE REFERENCE SIGN MOUNTING ON OUTSIDE SHOULDER ALONG MAIN FACILITY

NOTE: SIGN MOUNTING ON LEFT LANE SHOULDER SHALL BE 90° OPPOSITE THE RIGHT LANE STATION. IF CONDITIONS ARE SUCH THAT MILE SIGN CANNOT BE LOCATED WITHIN 50 FEET OF ITS TRUE LOCATION, IT SHALL BE OMITTED ENTIRELY.

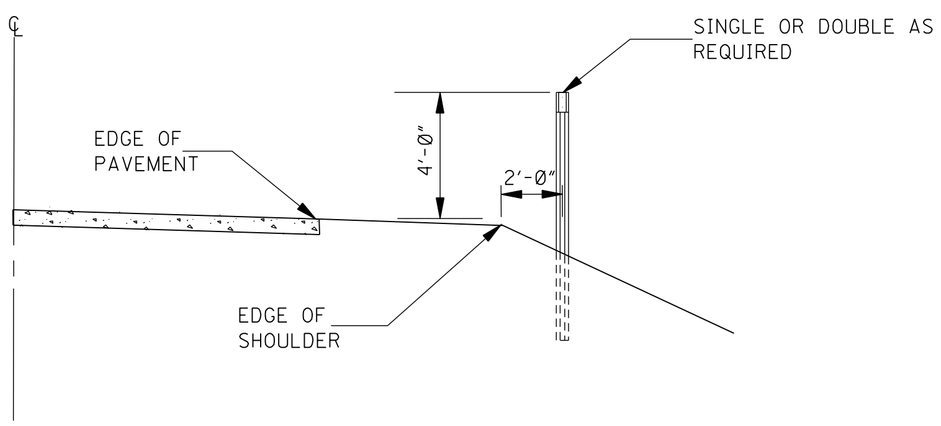

DELINEATOR MOUNTING ON OUTSIDE SHOULDER ALONG MAIN FACILITY OR RAMP

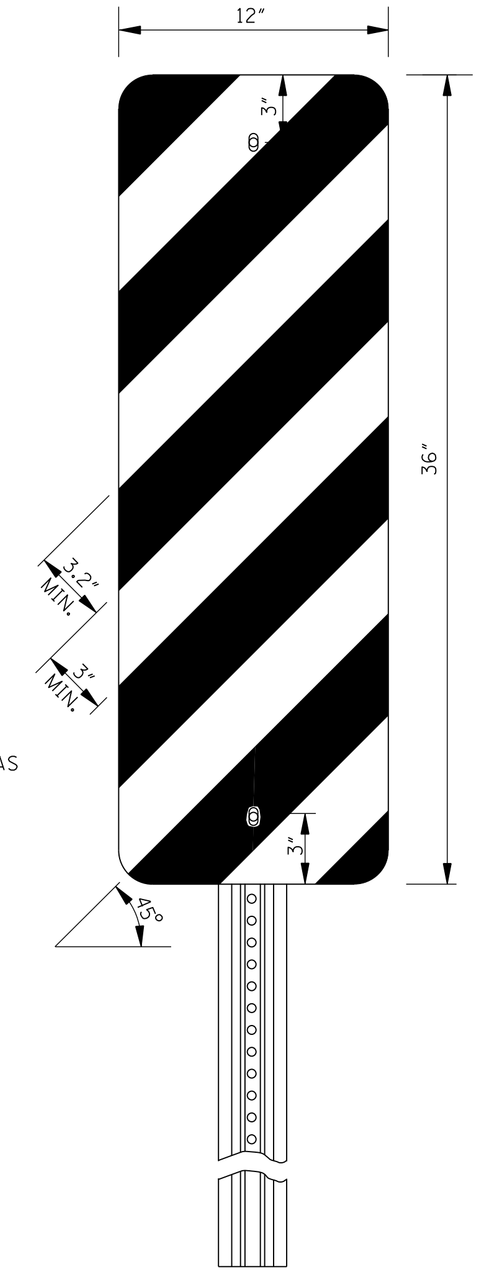

DETAIL OF TYPE 3 OBJECT MARKER

NOTE: COLORS- BLACK AND YELLOW. STRIPING SHOWN ABOVE FOR RIGHT SIDE ONLY. STRIPES SLANT DOWNWARD TO THE RIGHT FOR LEFT SIDE OF BRIDGE END. SEE DETAIL BELOW.

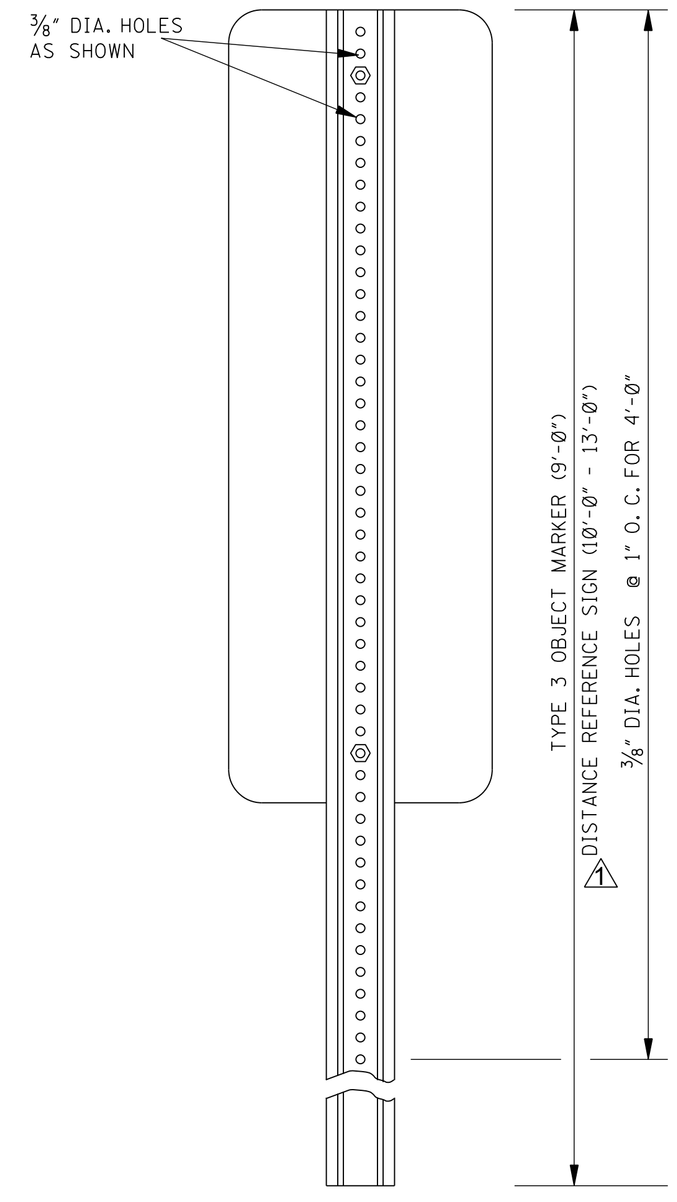

REAR VIEW OF TYPE 3 OBJECT MARKER OR DISTANCE REFERENCE SIGN ASSEMBLY

NOTE: TYPE 3 OBJECT MARKER AND DISTANCE REFERENCE SIGNS SHALL BE FASTENED TO U-SECTION POSTS WITH 5/16" DIA. BLIND FASTENERS OF THE COLLAR TYPE.

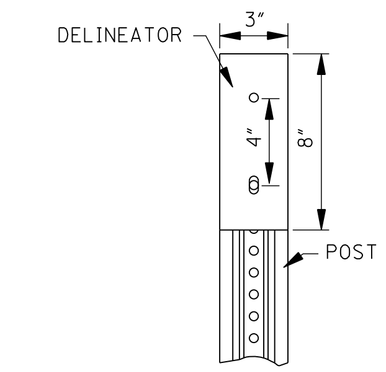

DETAIL OF SINGLE WHITE OR SINGLE YELLOW DELINEATOR

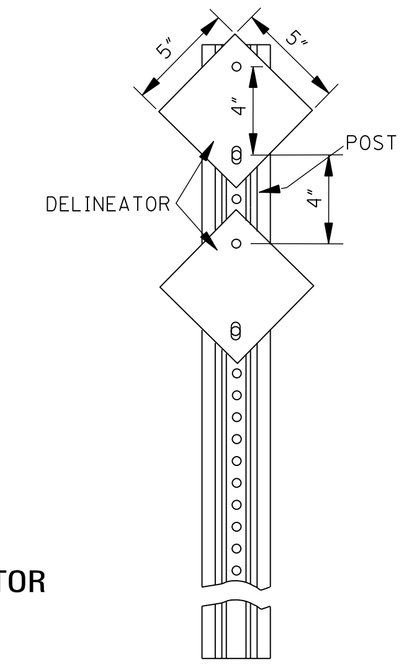

DETAIL OF DOUBLE WHITE OR DOUBLE YELLOW DELINEATOR

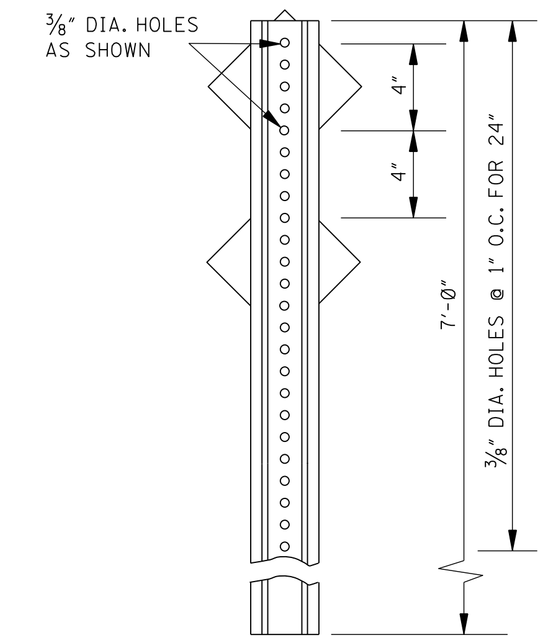

REAR VIEW OF DELINEATOR ASSEMBLY

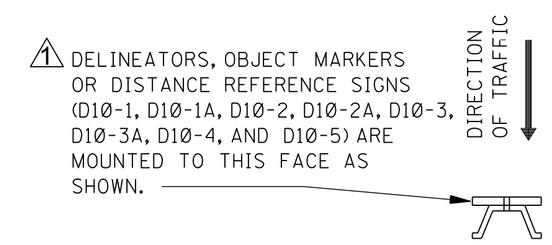

MOUNTING DETAIL

NOTE: DELINEATORS SHALL BE FASTENED TO U-SECTION POSTS WITH 1/4" DIA. BLIND FASTENERS OF THE COLLAR TYPE.

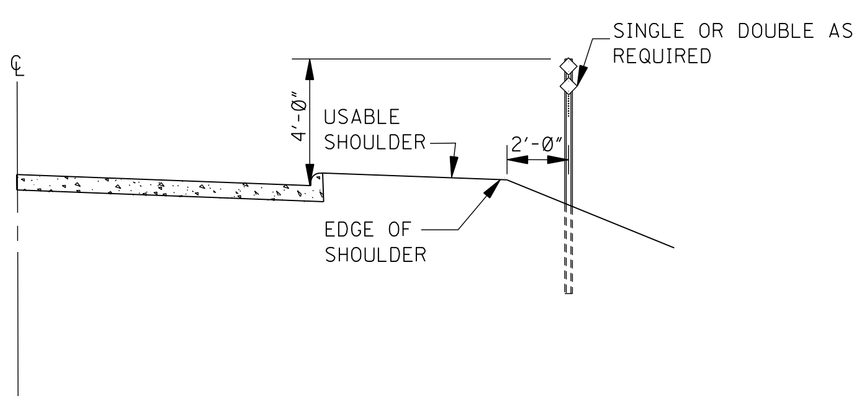

DELINEATOR MOUNTING ON OUTSIDE SHOULDER WITH MOUNTABLE CURB ALONG MAIN FACILITY OR RAMP

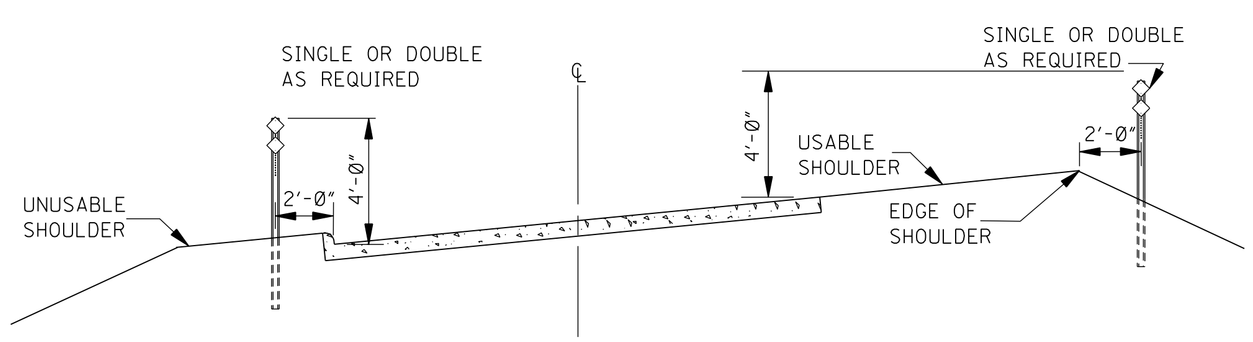

DELINEATOR MOUNTING ON INTERCHANGE LOOPS WITH UNMOUNTABLE CURB ON INSIDE

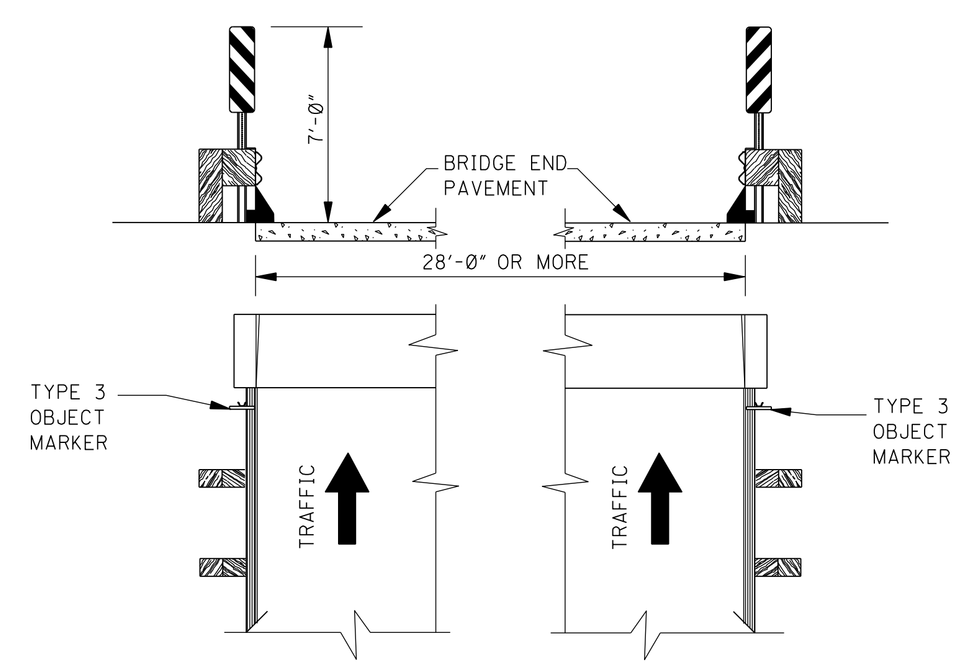

DETAIL OF TYPE 3 OBJECT MARKER INSTALLATION

GENERAL NOTES:

1. DELINEATORS AND TYPE 3 OBJECT MARKER SHALL BE RETROREFLECTIVE SHEETING ON 0.080" THICK ALUMINUM SHEET OR 14 GAGE GALVANIZED SHEET STEEL.
2. DELINEATOR, TYPE 3 OBJECT MARKER AND DISTANCE REFERENCE SIGN POSTS SHALL BE GALVANIZED STEEL. THE POSTS SHALL BE FABRICATED BEFORE THE METAL IS GALVANIZED.
3. WEIGHT WITHOUT GROUND PLATES:
   A. DELINEATOR POST 7'-0" - 2.0 lb/ft TO 2.5 lb/ft
   B. TYPE 3 OBJECT MARKER POST 9'-0" - 2.5 lb/ft TO 3.0 lb/ft
   C. DISTANCE REFERENCE SIGN POST 10'-0", 11'-0", & 12'-0" - 3.0 lb/ft TO 3.5 lb/ft
4. UNIT PRICE OF DELINEATORS AND TYPE 3 OBJECT MARKERS SHALL INCLUDE COST OF POST. DISTANCE REFERENCE SIGN POST WILL BE PAID FOR PER FOOT.
5. RADIUS IN BENDS OF POST CROSS SECTION NOT TO EXCEED 13/32 FOR HOT ROLLED SECTION.
6. GROUND PLATE NOT REQUIRED ON U-SECTION POST.

DATE	REVISION	BY
12/11/25	REVISED TEXT	STN

MISSISSIPPI DEPARTMENT OF TRANSPORTATION
ROADWAY DESIGN DIVISION
STANDARD PLAN

TYPICAL INSTALLATION AND DETAILS OF DELINEATORS AND DISTANCE REFERENCE SIGNS

MDOT

WORKING NUMBER SN-8

SHEET NUMBER 6314

ISSUE DATE: AUGUST 01, 2017

STATE	PROJECT NO.
MISS.	

ADDENDUM

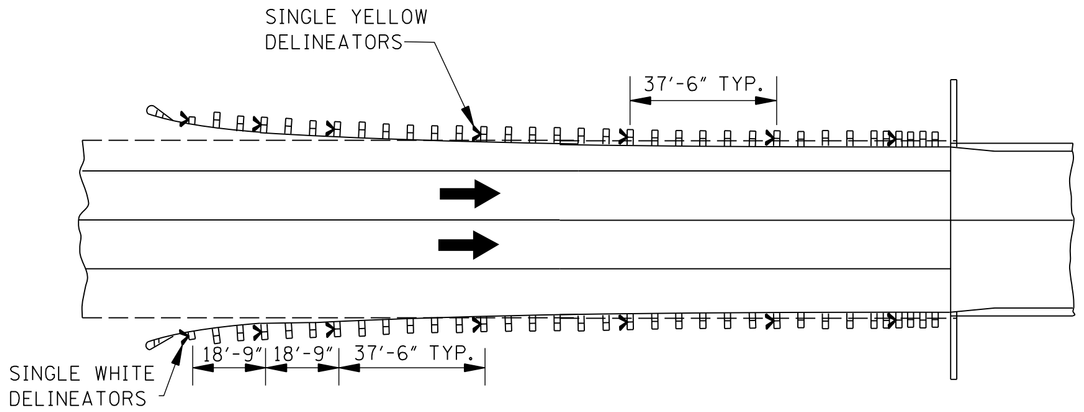

BRIDGE APPROACH INSTALLATION
(ONE-WAY TRAFFIC)

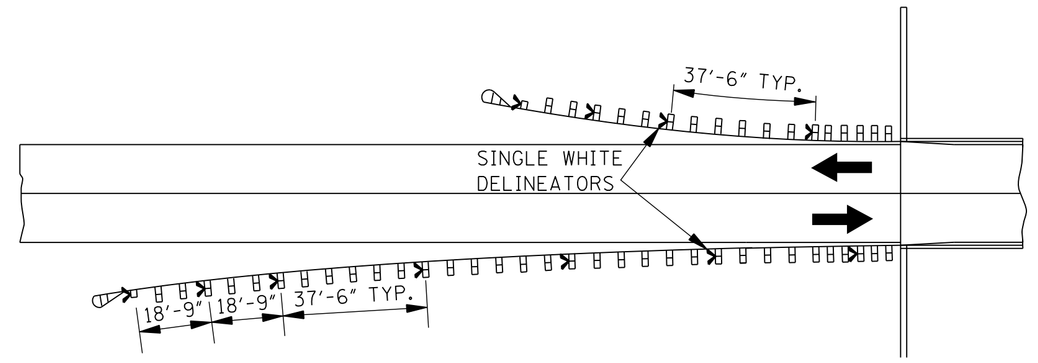

BRIDGE APPROACH INSTALLATION
(TWO-WAY TRAFFIC)

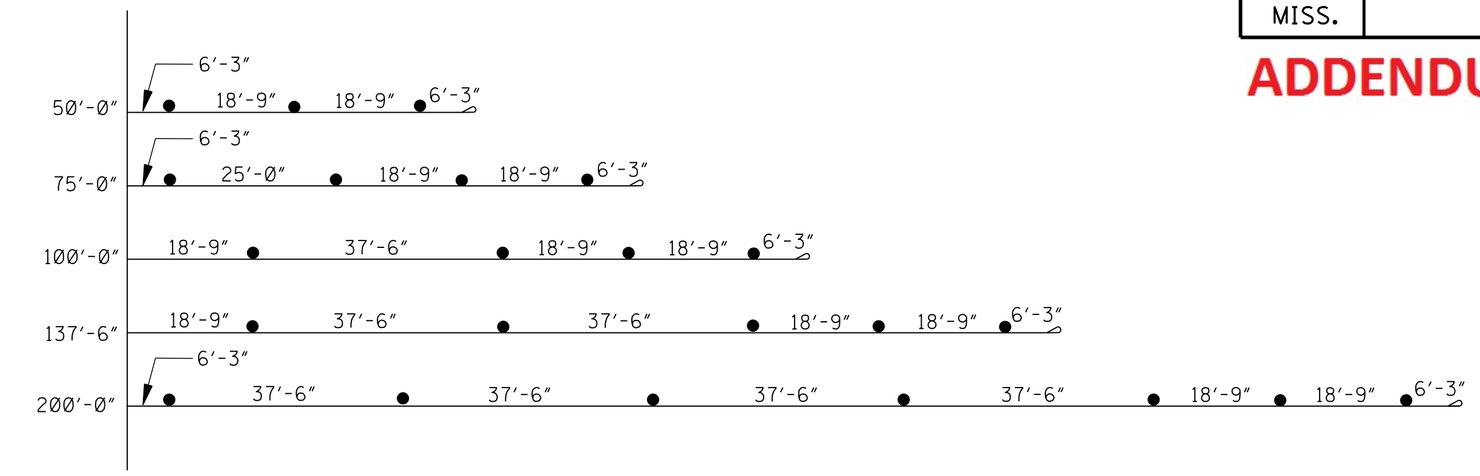

GRAPHIC SHOWING SPACINGS OF GUARDRAIL DELINEATORS
AT SOME COMMONLY USED BRIDGE APPROACHES

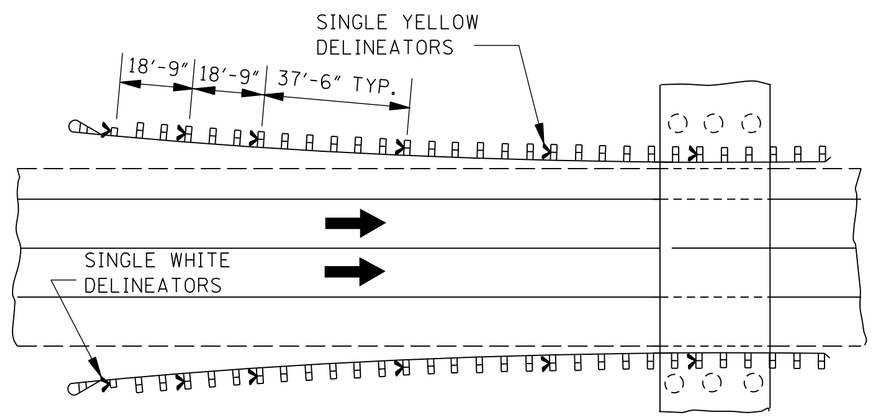

ROADSIDE OBSTACLE INSTALLATION–LENGTH 250' OR LESS
(ONE-WAY TRAFFIC)

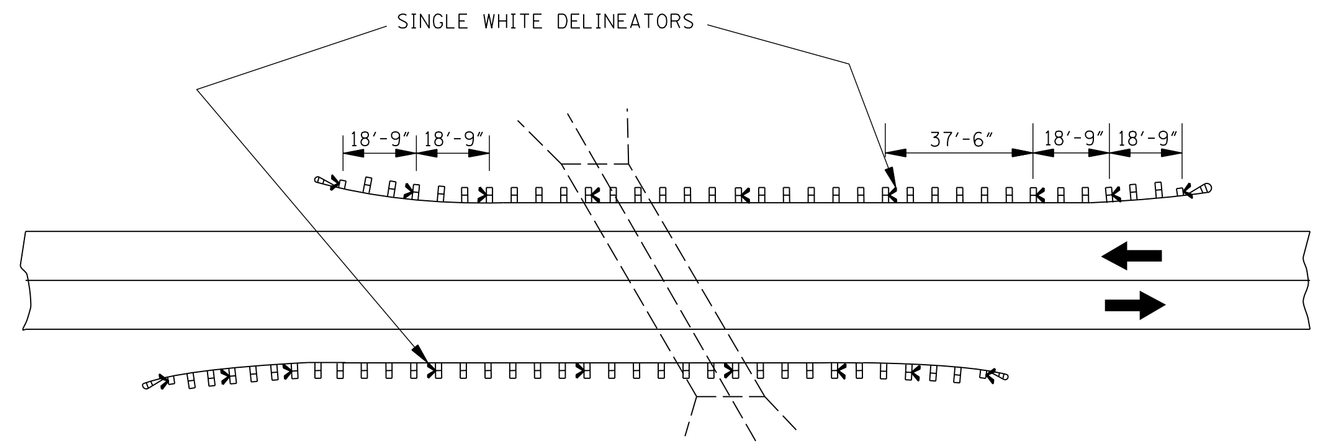

ROADSIDE OBSTACLE INSTALLATION–LENGTH 250' OR LESS
(TWO-WAY TRAFFIC)

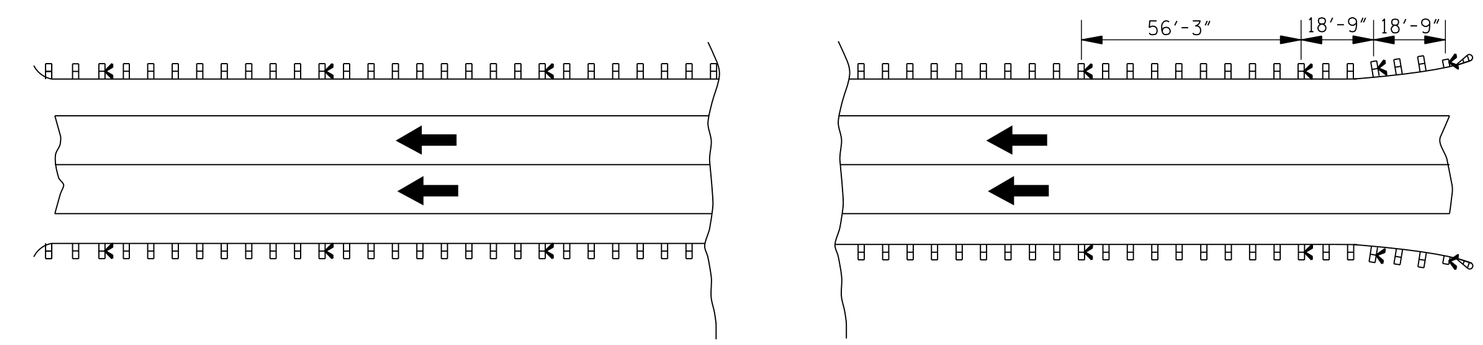

EMBANKMENT OR ROADSIDE OBSTACLE INSTALLATION–LENGTH GREATER THAN 250'
(ONE-WAY TRAFFIC)

NOTE: ONE-WAY TRAFFIC SHOWN. DELINEATOR SPACING FOR TWO-WAY TRAFFIC SIMILAR. DELINEATOR COLOR WILL BE THE SAME AS THE ADJACENT PAVEMENT EDGE MARKING. THE FIRST THREE (3) MARKERS WILL FACE TRAFFIC IN OFF LANE FOR TWO-WAY TRAFFIC AS SHOWN IN DRAWING FOR OBSTACLE INSTALLATION FOR TWO-WAY TRAFFIC.

GENERAL NOTES:

1. THE UNIT PRICE OF DELINEATOR INCLUDES: COST(S) OF DELINEATOR FACE(S), POST, HARDWARE AND INSTALLATION.

△1 2. DELINEATORS SHALL CONSIST OF RETROREFLECTIVE DEVICES THAT ARE CAPABLE OF CLEARLY RETROREFLECTING LIGHT UNDER NORMAL ATMOSPHERIC CONDITIONS FROM A DISTANCE OF 1000 FEET WHEN ILLUMINATED BY THE HIGH BEAMS OF STANDARD AUTOMOBILE LIGHTS.

△1 3. FOR THE SPACING OF DELINEATORS IN HORIZONTAL CURVES ON ROADWAYS OR BRIDGES, SEE TABLE 3G-1, MUTCD 11th EDITION, FOR SPACING REQUIREMENTS.

△1 4. DELINEATORS FOR GUARDRAIL SHALL BE MOUNTED ON FLEXIBLE POSTS AS FOLLOWS:

THE DELINEATOR POSTS WILL BE FROM MDOT'S "APPROVED PRODUCTS LIST" AND WILL BE FASTENED TO GUARDRAIL POST IN ACCORDANCE WITH THE MANUFACTURER'S RECOMMENDATION.

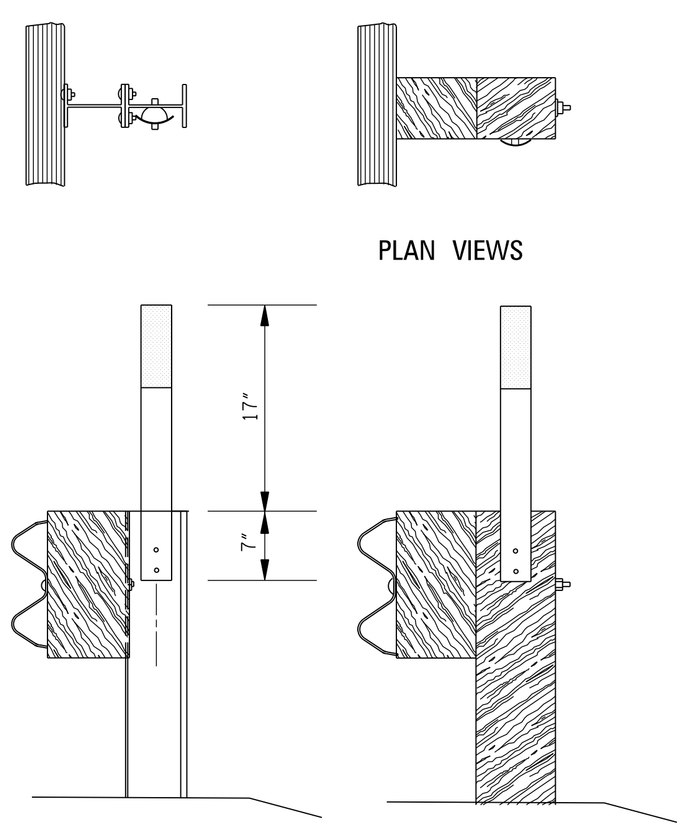

PLAN VIEWS

TYPICAL FLEXIBLE POST DELINEATOR
GUARDRAIL INSTALLATION

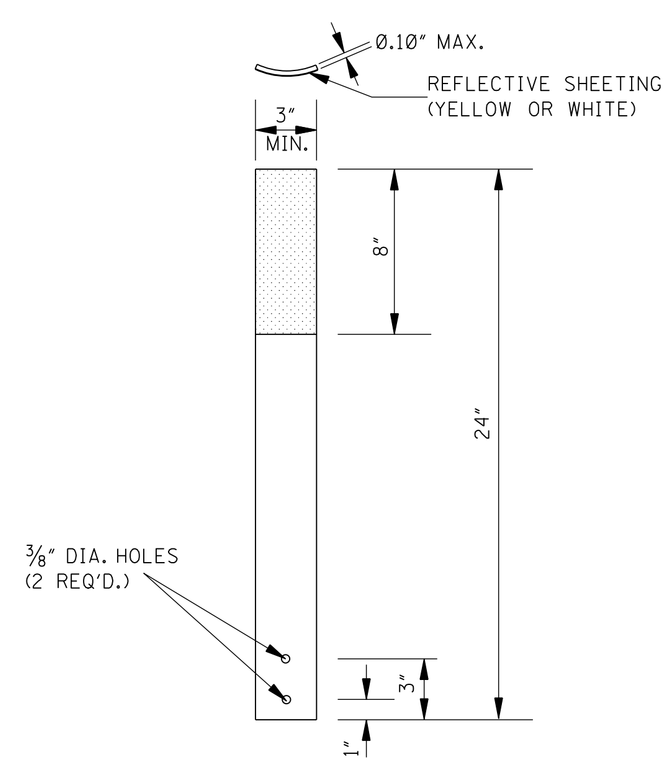

DETAIL OF FLEXIBLE
GUARDRAIL DELINEATOR

DATE	REVISION	BY
12/11/25	REVISED TEXT	STN

MISSISSIPPI DEPARTMENT OF TRANSPORTATION
ROADWAY DESIGN DIVISION
STANDARD PLAN

TYPICAL GUARDRAIL DELINEATION

MDOT MISSISSIPPI DEPARTMENT OF TRANSPORTATION

WORKING NUMBER
SN-8C

ISSUE DATE: AUGUST 01, 2017

SHEET NUMBER
6317

STATE	PROJECT NO.
MISS.	

ADDENDUM

DRAWING NOT INTENDED TO REPRESENT PAVEMENT MARKING DETAILS

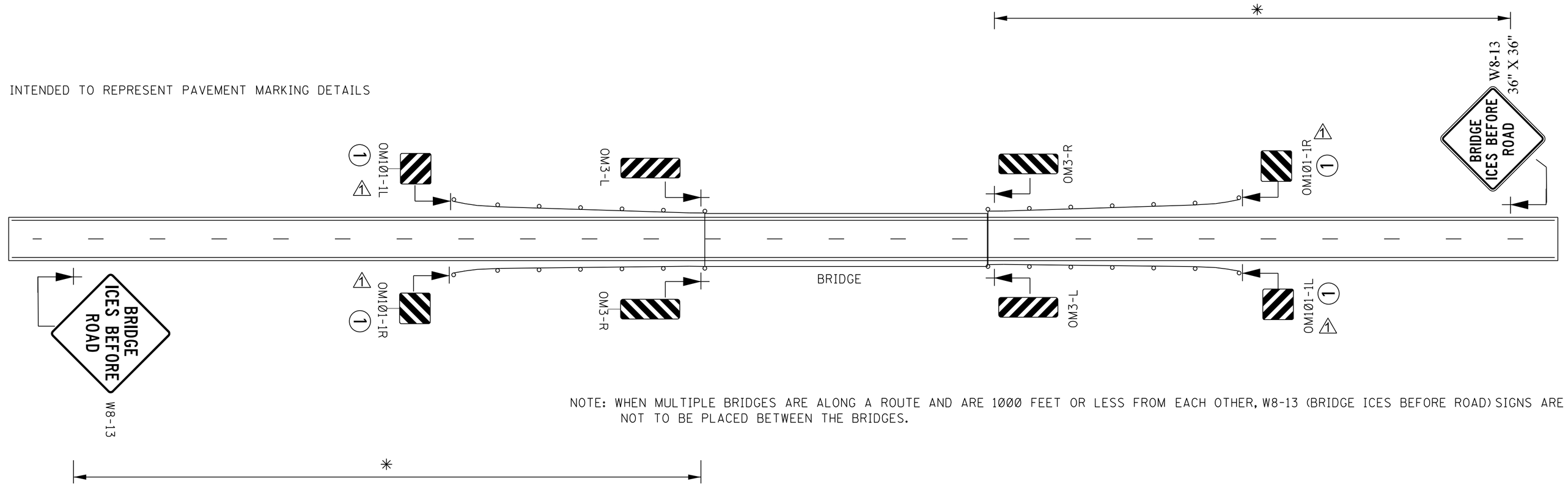

NOTE: WHEN MULTIPLE BRIDGES ARE ALONG A ROUTE AND ARE 1000 FEET OR LESS FROM EACH OTHER, W8-13 (BRIDGE ICES BEFORE ROAD) SIGNS ARE NOT TO BE PLACED BETWEEN THE BRIDGES.

UNDIVIDED HIGHWAY DETAIL

SIGN QUANTITES FOR UNDIVIDED HIGHWAY (PER SIGN)					
MUTCD NUMBER	STANDARD ROAD SIGNS SHEET ALUMINUM 0.080" THICKNESS	STANDARD ROAD SIGNS SHEET ALUMINUM 0.125" THICKNESS	SQUARE FEET 0.080" THICKNESS	SQUARE FEET 0.125" THICKNESS	U-SECTION POST (3-P)
OM3-L	12" X 36"		3 SF		9 LF
OM3-R	12" X 36"		3 SF		9 LF
W8-13		36" X 36"		9 SF	15 LF

⚠ (1) RETROREFLECTIVE ADHESIVE SHEETING WITH ALTERNATING BLACK AND YELLOW STRIPES (SLOPING DOWNWARD) (OM101-1L, OM101-1R) AT AN ANGLE OF 45 DEGREES (IN THE DIRECTION TRAFFIC IS TO PASS) IS REQUIRED ON THE END OF THE TERMINAL END SECTION. NOT A SEPARATE PAY ITEM. COST TO BE ABSORBED IN GUARD RAIL.

* TABLE 2C-3 MUTCD		
SPEED (MPH)	MINIMUM PLACEMENT (FEET)	
35	250	⚠
40	305	⚠
45	360	⚠
50	425	⚠
55	495	⚠
60	570	⚠
65	645	⚠
70	730	⚠

SIGN QUANTITES FOR DIVIDED HIGHWAY (PER SIGN)								
MUTCD NUMBER	STANDARD ROAD SIGNS SHEET ALUMINUM 0.080" THICKNESS	STANDARD ROAD SIGNS SHEET ALUMINUM 0.125" THICKNESS	SQUARE FEET 0.080" THICKNESS	SQUARE FEET 0.125" THICKNESS	U-SECTION POST (3-P)	STANDARD 4" PIPE	STRUCTURAL BARS 7/8" X 2½"	FOOTING CLASS "B" CONCRETE
OM3-L	12" X 36"		3 SF		9 LF			
OM3-R	12" X 36"		3 SF		9 LF			
W8-13		48" X 48"		16 SF		16.5 LF	19.35 LB (2@2'-7")	0.13 CY

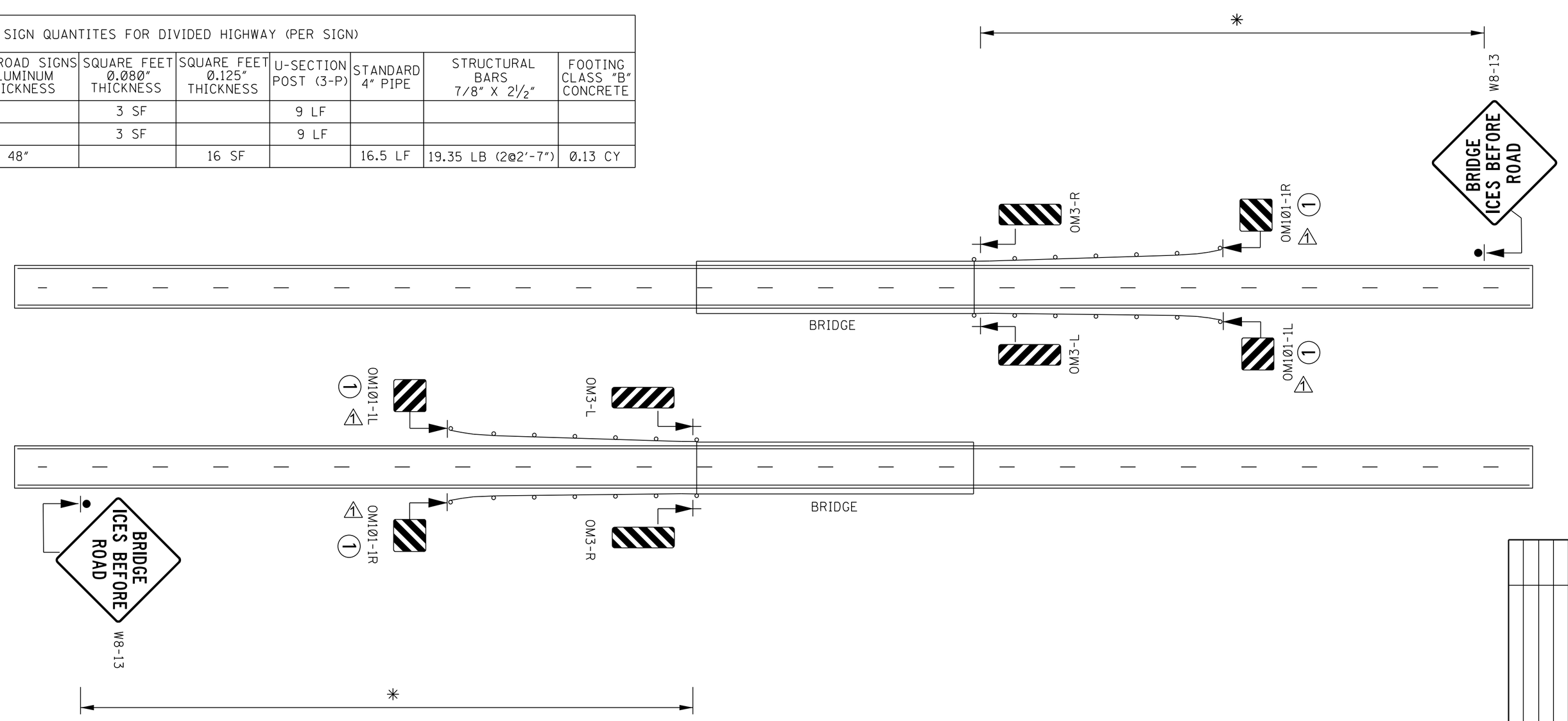

DIVIDED HIGHWAY DETAIL

12/11/25	REVISED TEXT	STN	
DATE	REVISION	BY	

MISSISSIPPI DEPARTMENT OF TRANSPORTATION
ROADWAY DESIGN DIVISION
STANDARD PLAN

SIGNING DETAILS FOR BRIDGE APPROACHES

ISSUE DATE: AUGUST 01, 2017

WORKING NUMBER SN-9

SHEET NUMBER 6318

STATE	PROJECT NO.
MISS.	

ADDENDUM

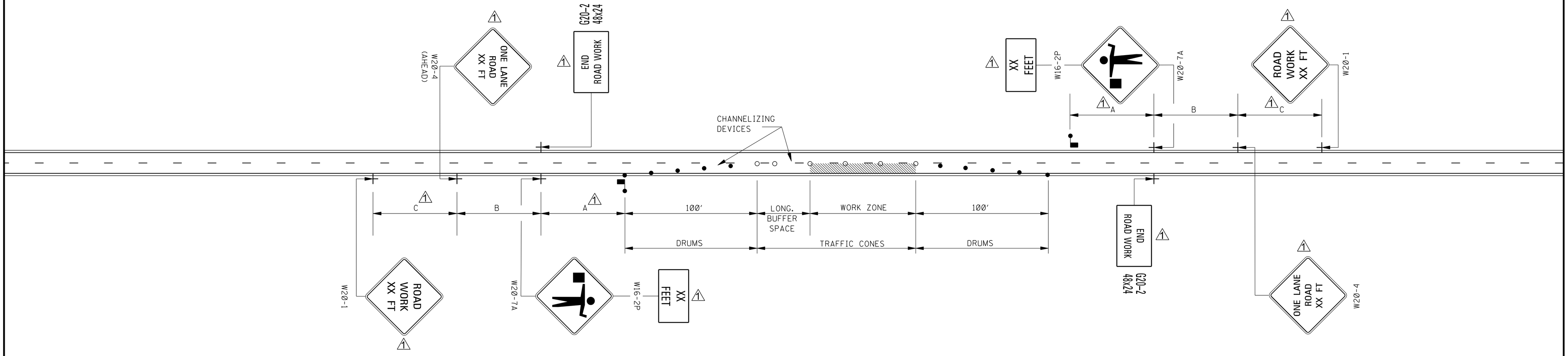

LEGEND

- FLAGGER
- ● RETROREFLECTIVE FREE-STANDING PLASTIC DRUMS
- ○ TRAFFIC CONES (28" HEIGHT MINIMUM)

GENERAL NOTES:

1. THE LOCATION OF CHANNELIZING DEVICES AND THE WORK AREA LAYOUT SHALL BE BASED ON THE CRITERIA IN THE FOLLOWING TABLE. FLAGGER STATIONS SHALL BE LOCATED SUCH THAT APPROACHING VEHICLES WILL HAVE SUFFICIENT DISTANCE TO STOP. VALUES IN STOPPING SIGHT DISTANCE COLUMN MAY BE USED AS A MINIMUM FOR THIS DISTANCE.

POSTED SPEED AND/OR DESIGN SPEED AND/OR ANTICIPATED OPERATING SPEED (1)	MAXIMUM CHANNELIZING DEVICE SPACING (ft)		LONGITUDINAL BUFFER SPACE (ft) †	STOPPING SIGHT DISTANCE
mph	TAPER	ALONG LANE LINE & WORK ZONE		
25	20	50	55	155
30	20	60	85	200
35	20	70	120	250
40	20	80	170	305
45	20	90	220	360
50	20	100	280	425
55	20	110	335	495
60	20	120	415	570
65	20	130	485	645

† NOTE: BUFFER SPACE MAY BE ADJUSTED AS NEEDED ACCORDING TO ROADWAY GEOMETRY TO MEET SIGHT DISTANCE REQUIREMENTS, AS DIRECTED BY THE ENGINEER.

2. ALL CHANNELIZING DEVICES SHALL BE A MINIMUM OF 28" IN HEIGHT.

3. DIAMOND SHAPED TRAFFIC CONTROL SIGNS SHALL BE A MINIMUM OF 36" x 36" AND BLACK COPY ON FLUORESCENT ORANGE SHEETING.

4. WHEN WORK ZONE IS NO LONGER NEEDED, ALL SIGNS SHALL BE COVERED OR REMOVED AND ALL CHANNELIZING DEVICES SHALL BE MOVED TO THE SHOULDER EDGE.

5. ADDITIONAL FLAGGERS MAY BE NEEDED AS DIRECTED BY THE ENGINEER.

(1) 6. WHEN WORK IS REQUIRED AT NIGHT, FLAGGER STATIONS SHALL BE ILLUMINATED EXCEPT IN EMERGENCIES.

7. CHANNELIZING DEVICE TYPES FOR:
   A. APPROACH AND EXIT TAPERS- RETROREFLECTIVE PLASTIC DRUMS
   B. ALONG LANE LINE AND WORK ZONE- TRAFFIC CONES (28" HEIGHT)

8. ALL TRAFFIC CONTROL ITEMS SHOWN ON THIS SHEET WILL NOT BE MEASURED FOR SEPARATE PAYMENT. THIS WORK SHALL BE INCLUDED IN THE PRICE BID FOR MAINTENANCE OF TRAFFIC.

(1) 9. AN OPTIONAL FLAGGER (W20-7A) WORD MESSAGE IS SHOWN IN THE "STANDARD HIGHWAY SIGNS" PUBLICATION.

DISTANCE BETWEEN SIGNS

ROAD TYPE	A	B	C
URBAN (35 MPH OR LESS)	100 FT.	100 FT.	100 FT.
URBAN (40 - 70 MPH)	350 FT.	350 FT.	350 FT.
RURAL	500 FT.	500 FT.	500 FT.
EXPRESSWAY / FREEWAY	1000 FT.	1500 FT.	2640 FT.

DATE	REVISION	BY
12/11/25	REVISED TEXT	STN

MISSISSIPPI DEPARTMENT OF TRANSPORTATION
ROADWAY DESIGN DIVISION
STANDARD PLAN

TRAFFIC CONTROL PLAN WITH FLAGGER
(ONE-LANE CLOSURE OF TWO-WAY TRAFFIC)

MDOT MISSISSIPPI DEPARTMENT OF TRANSPORTATION

WORKING NUMBER: TCP-1

ISSUE DATE: AUGUST 01, 2017

SHEET NUMBER: 6351

STATE	PROJECT NO.
MISS.	

ADDENDUM

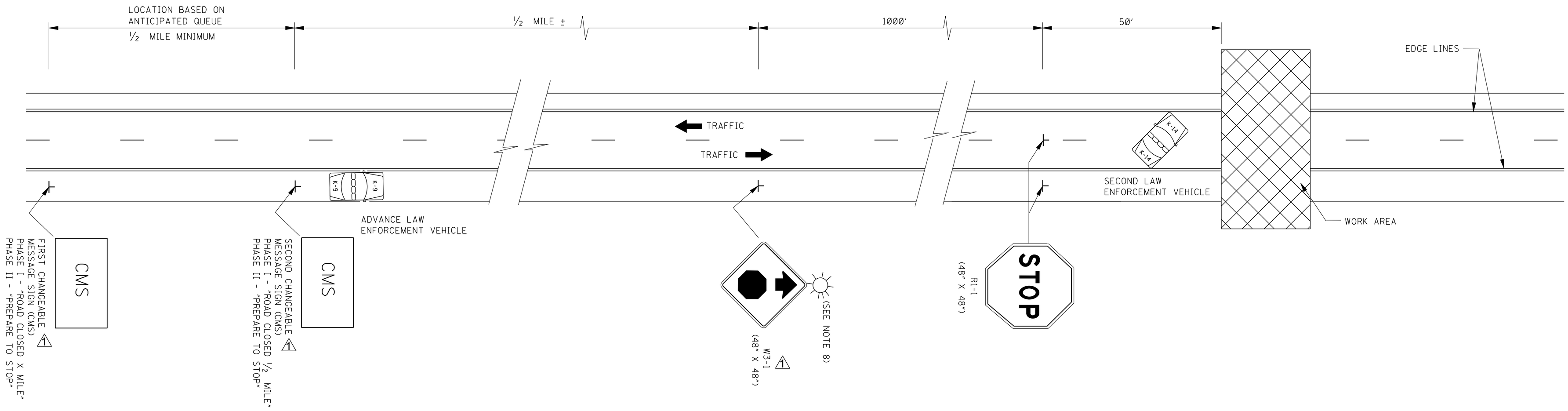

GENERAL NOTES:

1. THIS TYPE OF HIGHWAY CLOSURE SHOULD ONLY BE USED FOR CONSTRUCTION OPERATIONS WHEN THE DURATION OF CLOSURE WILL NOT EXCEED 30 MINUTES. AFTER THE HIGHWAY HAS BEEN CLOSED AND REOPENED VIA THIS PROCEDURE, A MINIMUM PERIOD OF 30 MINUTES SHOULD ELAPSE BEFORE ANOTHER SHORT DURATION CLOSURE, EXCEPT WITH THE APPROVAL OF THE ENGINEER.

2. AT LEAST TWO LAW ENFORCEMENT OFFICERS AND TWO LAW ENFORCEMENT VEHICLES SHOULD BE PROVIDED ON EACH APPROACH TO THE CLOSURE. EACH LAW ENFORCEMENT VEHICLE SHOULD HAVE A ROOF MOUNTED OPERATING FLASHING BLUE LIGHT OR LIGHT BAR.

3. RESTRICTIONS ON ROAD CLOSURES ARE SPECIFIED IN THE CONTRACT DOCUMENT.

4. THE ADVANCE LAW ENFORCEMENT VEHICLE SHOULD BE MOVED BACK AS REQUIRED BY THE QUEUING OF STOPPED VEHICLES.

5. IF QUEUE EXCEEDS THE FIRST CHANGEABLE MESSAGE SIGN (CMS) AT ANY TIME DURING A CLOSURE; THE TRAFFIC CONTROL PLAN SHOULD BE ADJUSTED AS NECESSARY, WITH APPROVAL OF THE ENGINEER.

6. TRAFFIC CONTROL FOR THE CLOSURE SHOULD BE ACCOMPLISHED IN THE FOLLOWING ORDER:
   A. FIRST CHANGEABLE MESSAGE SIGN (CMS)
   B. SECOND CHANGEABLE MESSAGE SIGN (CMS)
   C. ADVANCE LAW ENFORCEMENT VEHICLE, LIGHTS AND FLASHERS ON.
   D. "W3-1 (48" X 48") (ORANGE/BLACK TYPE XI RETROREFLECTIVE SHEETING)" SIGNS ERECTED.
   E. "R1-1 (48" X 48")" SIGNS ERECTED OR INSTALLED ON TEMPORARY STANDS TO STOP TRAFFIC. THE ORDER OF ERECTION SHOULD BE IN THE FOLLOWING ORDER: RIGHT SHOULDER THEN CENTER.
   F. SECOND LAW ENFORCEMENT VEHICLE, LIGHTS AND FLASHERS ON.

7. TRAFFIC CONTROL SHOULD BE REMOVED IN THE FOLLOWING ORDER:
   A. WITH TRAFFIC STOPPED REMOVE THE "R1-1 (48" X 48")" SIGNS TOWARD THE RIGHT SHOULDER IN THE FOLLOWING ORDER: CENTER THEN SIGN ON THE RIGHT SHOULDER. SECOND LAW ENFORCEMENT VEHICLE LEADS TRAFFIC THROUGH WORK AREA.
   B. AFTER ALL STOPPED VEHICLES HAVE STARTED MOVING, THE "W3-1 (48" X 48)" SIGNS SHALL BE REMOVED. THESE SIGNS MAY BE COVERED IF RE-USE IS IMMINENT.
   C. AFTER ALL VEHICLES HAVE RESUMED APPROXIMATELY NORMAL SPEED, THE CHANGEABLE MESSAGE SIGNS SHALL BE TURNED OFF.

8. UNILLUMINATED SECTIONS OF HIGHWAYS SHOULD NOT BE CLOSED DURING HOURS OF DARKNESS EXCEPT FOR EMERGENCIES OR WITH THE APPROVAL OF THE ENGINEER. WHEN THE HIGHWAY MUST BE CLOSED DURING HOURS OF DARKNESS, A TYPE B HIGH INTENSITY FLASHING BARRICADE WARNING LIGHT SHALL BE USED ON EACH W3-1 SIGN.

9. IF AN ENTRANCE RAMP IS LOCATED BETWEEN THE SECOND CMS AND R1-1, THE CMS AND W3-1 SIGNS SHALL ALSO BE ERECTED ON THE RAMP SHOULDER.

10. THE ABOVE DURATION WILL APPLY TO EACH APPROACH TO THE CLOSURE.

11. ALL TRAFFIC CONTROL ITEMS SHOWN ON THIS SHEET WILL NOT BE MEASURED FOR SEPARATE PAYMENT. THIS WORK SHALL BE INCLUDED IN THE PRICE BID FOR MAINTENANCE OF TRAFFIC, INCLUDING SECURING LAW ENFORCEMENT SERVICES.

DATE	REVISION	BY
12/11/25	REVISED TEXT.	STN

MISSISSIPPI DEPARTMENT OF TRANSPORTATION
ROADWAY DESIGN DIVISION
STANDARD PLAN

SHORT DURATION CLOSING OF TWO-LANE TWO-WAY HIGHWAYS

MDOT MISSISSIPPI DEPARTMENT OF TRANSPORTATION

WORKING NUMBER
TCP-6

ISSUE DATE: AUGUST 01, 2017

SHEET NUMBER
6356

STATE	PROJECT NO.
MISS.	

ADDENDUM

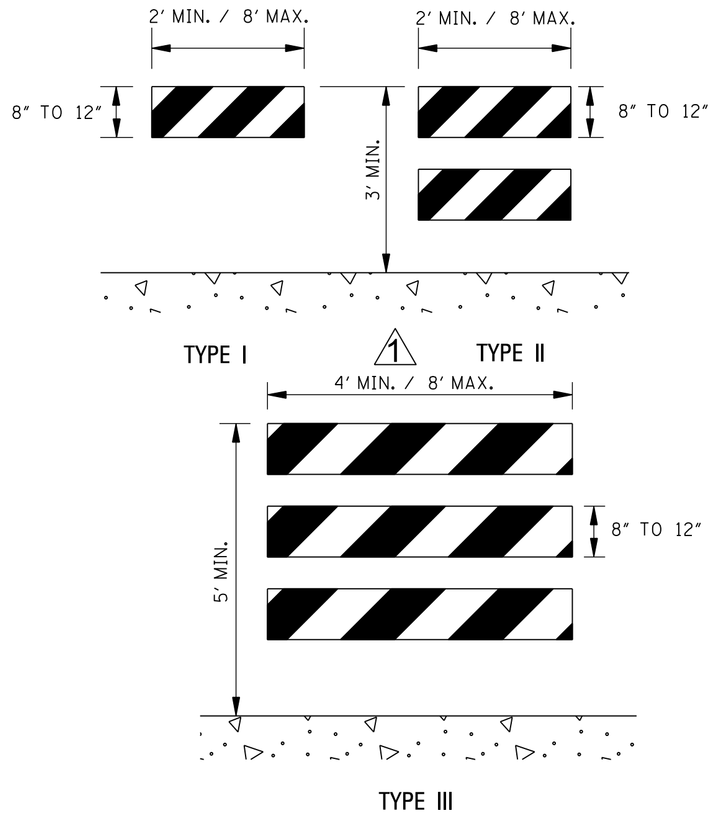

STANDARD BARRICADES

1 1. THE RETROREFLECTIVE MARKING FOR BARRICADE RAILS SHALL BE ORANGE AND WHITE (SLOPING DOWNWARD AT AN ANGLE OF 45° IN THE DIRECTION THAT TRAFFIC IS TO PASS).

2. RAIL STRIPE SHOULD BE 6 INCHES, EXCEPT THAT 4-INCH WIDE STRIPES MAY BE USED IF RAIL LENGTHS ARE LESS THAN 36 INCHES.

3. DO NOT PLACE SANDBAGS OR OTHER DEVICES ON BARRICADE RAILS TO PROVIDE MASS SANDBAGS, HOWEVER, MAY BE PLACES AS BALLAST TO THE LOWER PARTS OF THE FRAME OR THE STAYS TO BARRICADES.

4. FOR ADDITIONAL INFORMATION OR DETAILS, SEE MUTCD, LATEST EDITION.

1 5. BARRICADES ARE CLASSIFIED BY FHWA AS CATEGORY II WORK ZONE DEVICES. A LIST OF CRASHWORTHY BARRICADES AND OTHER CATEGORY II DEVICES CAN BE FOUND ON FHWA'S WEBSITE: http://highways.dot.gov/safety/RwD/reduce-crash-severity

1 6. WHERE ROAD USERS INCLUDE PEDESTRIANS, THE PROVISION OF SUPPLEMENTAL AUDIBLE INFORMATION OR DETECTABLE BARRIERS OR BARRICADES SHOULD BE PROVIDED FOR PEOPLE WITH VISION DISABILITIES.

1 7. BARRICADE RAIL SUPPORTS SHOULD NOT PROJECT INTO PEDESTRIAN CIRCULATION ROUTES MORE THAN 4 INCHES FOR THE SUPPORTS LOCATED BETWEEN 27 INCHES TO 80 INCHES ABOVE THE EXISTING SURFACE.

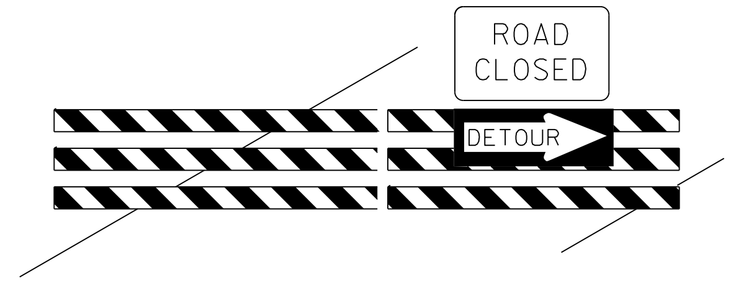

BARRICADE CLOSING A ROAD

BARRICADE CHARACTERISTICS

	I	II	III
WIDTH OF RAIL ✱✱	8" MIN. - 12" MAX.	8" MIN. - 12" MAX.	8" MIN. - 12" MAX.
LENGTH OF RAIL ✱✱	24" MIN. / 96" MAX.	24" MIN. /96" MAX.	48" MIN. / 96" MAX. 1
WIDTH OF STRIPE ✱	6"	6"	6"
HEIGHT	36" MIN.	36" MIN.	60" MIN.
NUMBER OF RETROREFLECTORIZED RAIL FACES	2 (ONE EACH DIRECTION)	4 (TWO EACH DIRECTION)	3 IF FACING TRAFFIC IN ONE DIRECTION 6 IF FACING TRAFFIC IN TWO DIRECTIONS

✱ 1. FOR RAILS LESS THAN 36" LONG, 4" WIDE STRIPES MAY BE USED.

✱✱ 2. BARRICADES INTENDED FOR USE ON EXPRESSWAYS, FREEWAYS AND OTHER HIGH SPEED ROADWAYS, SHALL HAVE A MINIMUM OF 270 in^2 OF REFLECTIVE AREA FACING TRAFFIC.

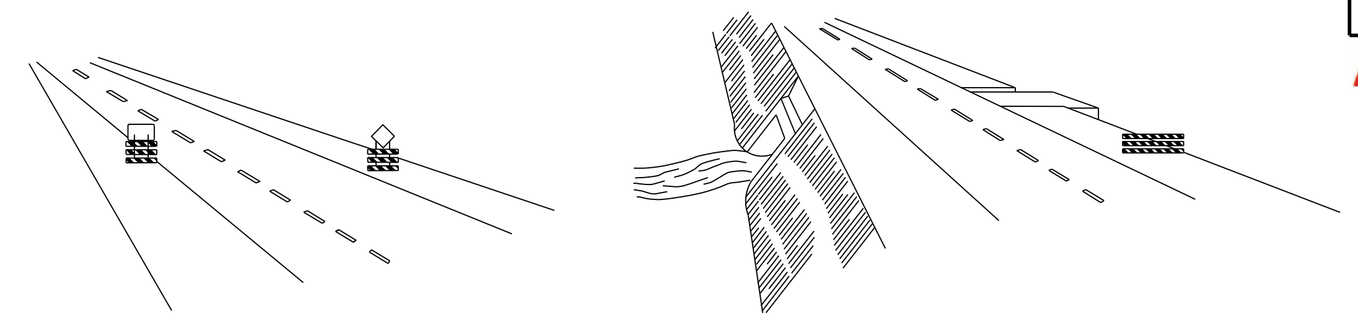

WING BARRICADES

1. WING BARRICADES ARE TYPE III BARRICADES ERECTED ON THE SHOULDER ON ONE OR BOTH SIDES OF THE PAVEMENT TO GIVE THE SENSATION OF A NARROWING OR RESTRICTED ROADWAY. WING BARRICADES MAY BE USED AS A MOUNTING FOR THE ADVANCE WARNING SIGNS OR FLASHERS.

2. WING BARRICADES SHOULD BE USED:
   A. IN ADVANCE OF A CONSTRUCTION PROJECT EVEN WHEN NO PART OF THE ROADWAY IS ACTUALLY CLOSED.
   B. IN ADVANCE OF ALL BRIDGE OR CULVERT WIDENING OPERATIONS.

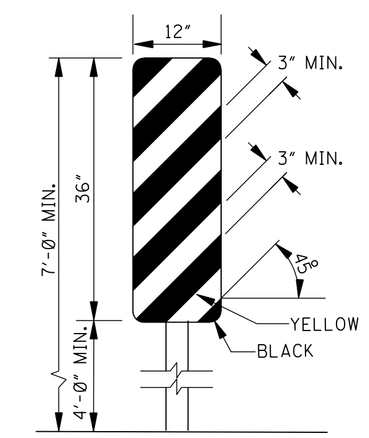

TYPE 3 OBJECT MARKER
(OM3-R)

1. TYPE 3 OBJECT MARKERS SHALL BE USED AT ALL EXPOSED BRIDGE ABUTMENTS AND AT OTHER LOCATIONS AS DEEMED NECESSARY BY THE ENGINEER.

2. THE OM3-R IS SHOWN. THE OM3-L IS SIMILAR EXCEPT THE STRIPES SLOPE DOWNWARD FROM THE UPPER LEFT SIDE TO THE LOWER RIGHT SIDE AND SHALL BE PLACED ON THE LEFT SIDE OF THE OBJECT.

3. THE INSIDE EDGE OF THE MARKER SHALL BE IN LINE WITH THE INNER EDGE OF THE OBSTRUCTION.

1 4. THE STRIPING SHALL CONSIST OF ALTERNATING BLACK AND RETOREFLECTIVE YELLOW SLOPING DOWNWARD TOWARD THE SIDE ON WHICH TRAFFIC IS THE PASS.

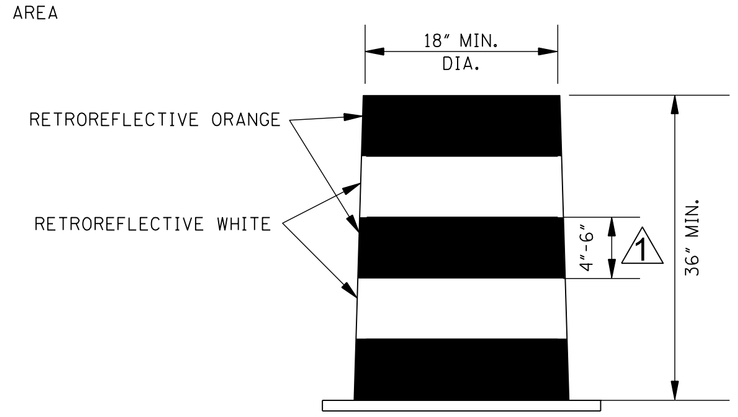

1 PLASTIC DRUM DETAIL

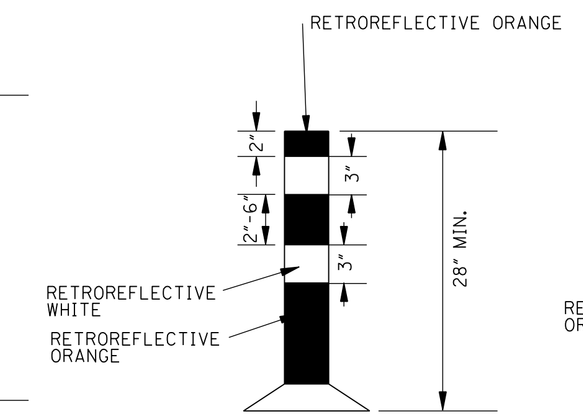

1 TUBULAR MARKER DETAIL

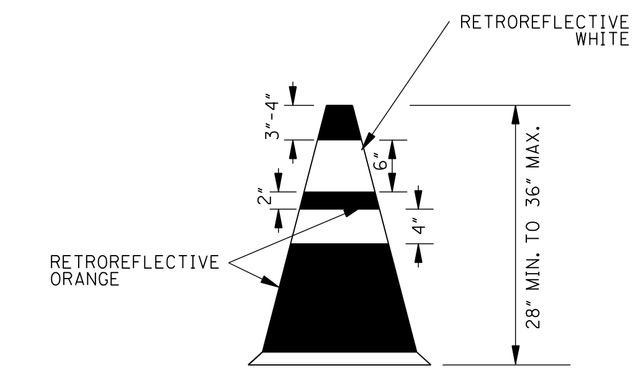

1 PLASTIC CONE DETAIL
(28" – 36")

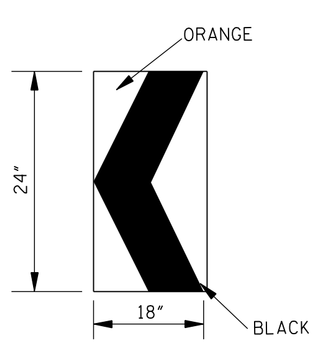

1 RETROREFLECTIVE CHEVRON ALIGNMENT SIGN DETAIL
(W1–8)

1. A CHEVRON SIGN CONSISTS OF A BLACK CHEVRON TYPE MARKING ON AN ORANGE BACKGROUND AND SHALL POINT IN THE DIRECTION OF TRAFFIC FLOW.

2. THE CHEVRON SIGN SHALL BE MOUNTED ON CRASHWORTHY SUPPORT.

3. CHEVRON SIGNS MAY BE USED TO SUPPLEMENT OTHER STANDARD DEVICES WHERE ONE OR MORE LANES ARE CLOSED FOR CONSTRUCTION OR MAINTENANCE. THEY SHOULD BE PLACED APPROXIMATELY 2'-0" BEHIND THE LANE TRANSITION STRIPE.

4. CHEVRON SIGNS SHALL BE INSTALLED AT A MINIMUM HEIGHT OF 4 FEET MEASURED VERTICALLY FROM THE BOTTOM OF THE SIGN TO THE ELEVATION OF THE NEAR EDGE OF THE TRAVELWAY.

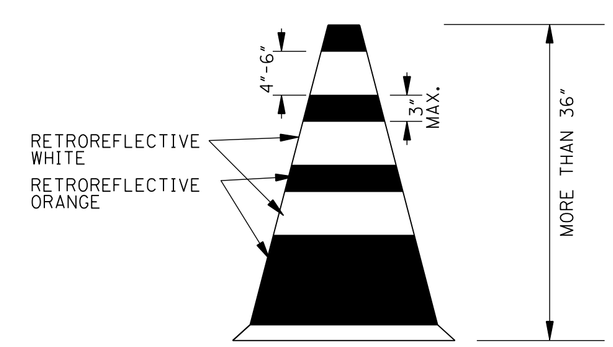

1 PLASTIC CONE DETAIL
(36" OR GREATER)

1 1. PLASTIC DRUMS, TUBULAR MARKERS, OR PLASTIC CONES SHALL BE ON END AND USED AS AN EXPEDIENT METHOD FOR TRAFFIC CHANNELIZATION. THE COLOR AND MARKING OF THE DEVICE USED SHALL BE CONSISTENT WITH MARKING STANDARDS FOR BARRICADE. THE PREDOMINANT COLOR ON THE DEVICE USED SHALL BE ORANGE WITH RETROREFLECTIVE, HORIZONTAL, CIRCUMFERENTIAL WHITE STRIPES AS SHOWN ON THE DETAILS.

1 2. DRUMS, TUBULAR MARKERS, OR PLASTIC CONES SHOULD NEVER BE PLACED IN THE ROADWAY WITHOUT WARNING SIGNS.

1 3. WHERE PRACTICAL PLASTIC DRUMS, TUBULAR MARKERS, OR PLASTIC CONES SHOULD BE PLACED NO CLOSER THAN 3'-0" FROM THE EDGE OF TRAVELED LANE.

4. BALLAST SHALL NOT BE PLACED ON THE TOP OF THE DRUM.

DATE	REVISION	BY
12/11/25	REVISED TEXT AND DETAILS.	STN

MISSISSIPPI DEPARTMENT OF TRANSPORTATION
ROADWAY DESIGN DIVISION
STANDARD PLAN

HIGHWAY SIGN AND BARRICADE DETAILS FOR CONSTRUCTION PROJECTS

MDOT MISSISSIPPI DEPARTMENT OF TRANSPORTATION

WORKING NUMBER
TCP-8

ISSUE DATE: AUGUST 01, 2017

SHEET NUMBER
6358

STATE	PROJECT NO.
MISS.	

ADDENDUM

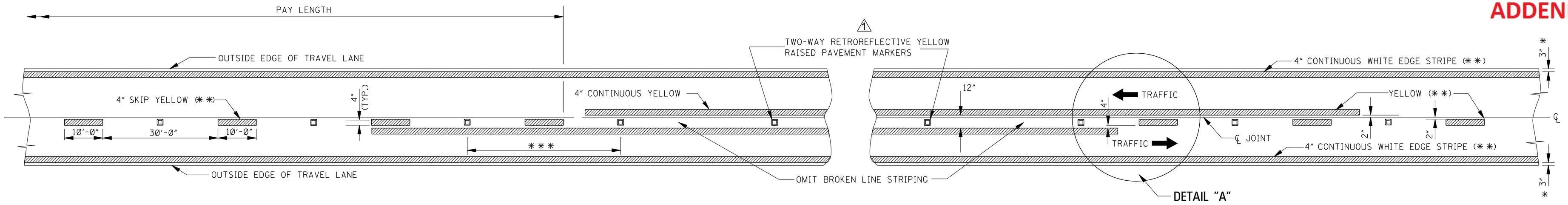

TWO–WAY TRAFFIC
(ASPHALT OR CONCRETE PAVEMENT)

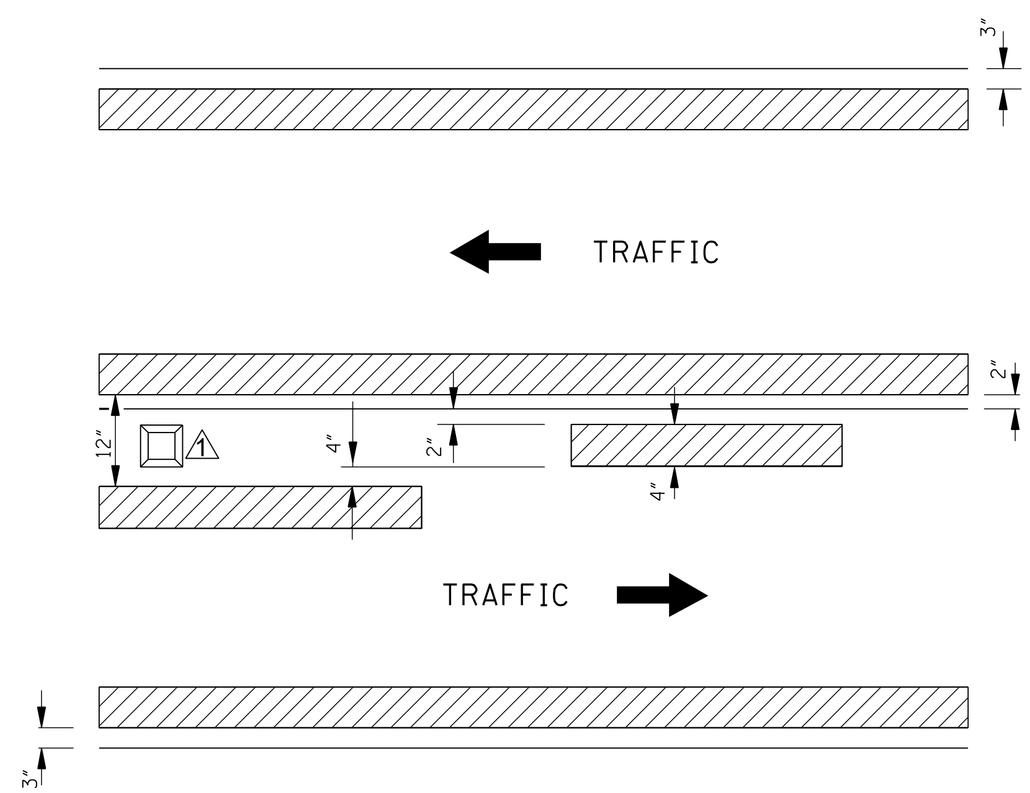

DETAIL "A"

DIRECTION OF TRAFFIC

GENERAL NOTES:

✱ 1. 3" UNLESS SHOWN ELSEWHERE ON THE PLANS.

✱✱ 2. EDGE STRIPE SHALL BE SAME MATERIAL AS LANE-LINE STRIPE (PAINT OR TAPE AS INDICATED IN PAY ITEMS).

△1 3. RETROREFLECTIVE RAISED PAVEMENT MARKERS TO BE USED IF TEMPORARY MARKINGS ARE TO REMAIN IN PLACE OVER 3 MONTHS

△1✱✱✱ 4. SPACING OF RETROREFLECTIVE RAISED PAVEMENT MARKERS IS AS FOLLOWS:

	URBAN AREA (ft-in)	RURAL AREA (ft-in)
TANGENT SECTIONS	40'-0"	80'-0"
HORIZONTAL CURVES	40'-0"	40'-0"
INTERCHANGE LIMITS	40'-0"	† 40'-0"

△1† NOTE: ON THE MAIN FACILITY, RETROREFLECTIVE RED-CLEAR RAISED PAVEMENT MARKERS ON A 40'-0" SPACING WILL BE REQUIRED ON LANE-LINE(S) THROUGH ALL INTERCHANGE AREAS BEGINNING 1000' IN ADVANCE (IN DIRECTION OF TRAFFIC) OF THE EXIT RAMP TAPER AND CONTINUING THROUGH THE INTERCHANGE TO THE END OF THE ENTRANCE RAMP TAPER.

△1 5. PAVEMENT MARKERS SHALL BE HIGH PERFORMANCE RETROREFLECTIVE RAISED PAVEMENT MARKERS FROM THE MDOT "APPROVED PRODUCTS LIST".

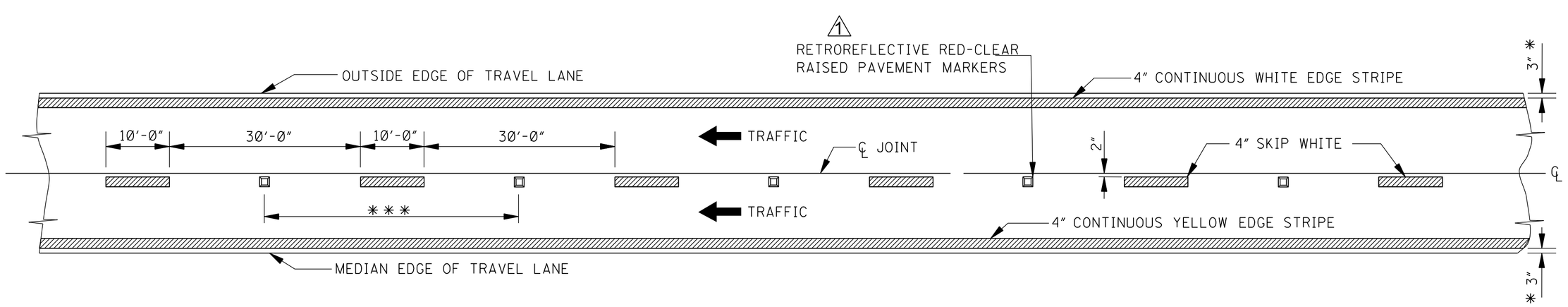

4–LANE WITH ONE–WAY TRAFFIC

DATE	REVISION	BY
12/11/25	REVISED TEXT	STN

MISSISSIPPI DEPARTMENT OF TRANSPORTATION
ROADWAY DESIGN DIVISION
STANDARD PLAN

TEMPORARY STRIPING FOR TRAFFIC CONTROL 2–LANE AND 4–LANE DIVIDED HIGHWAYS

MDOT MISSISSIPPI DEPARTMENT OF TRANSPORTATION

WORKING NUMBER TCP-13

ISSUE DATE: AUGUST 01, 2017

SHEET NUMBER 6363

STATE	PROJECT NO.
MISS.	

ADDENDUM

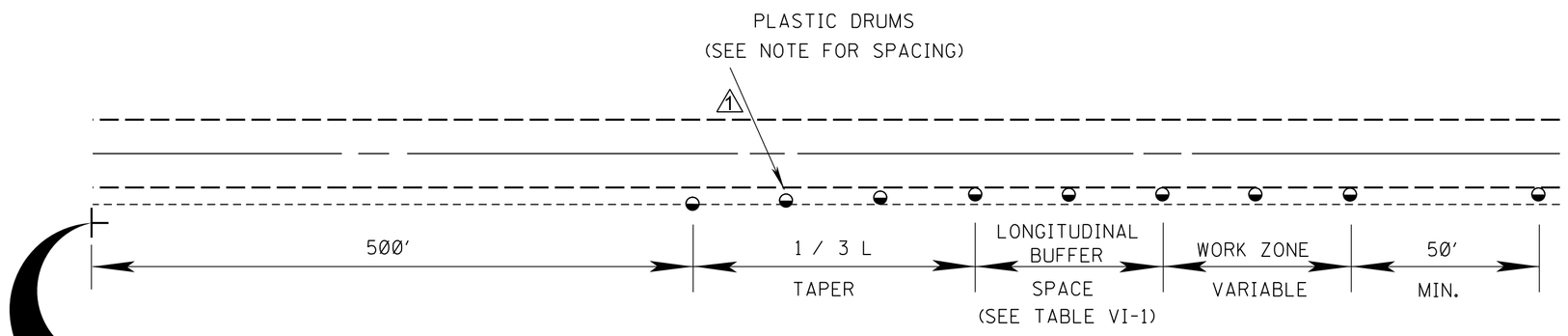

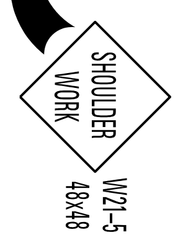

TYPICAL SHOULDER CLOSURE

(1) TO BE USED WITH EIGHT (8) FOOT OR GREATER WIDTH IMPROVED SHOULDER.
(2) TO BE USED WHEN CONSTRUCTION VEHICLES (EQUIPMENT) ENCROACHES ON OR WITHIN TWO (2) FEET OF THE SHOULDER BREAK.
△1 (3) FOR SHORT DURATION OPERATIONS OF 60 MINUTES OR LESS, ALL SIGNS AND CHANNELIZING DEVICES MAY BE ELIMINATED IF A VEHICLE WITH ACTIVATED HIGH-INTENSITY ROTATING, FLASHING, OSCILLATING, OR STROBE LIGHTS IS USED.

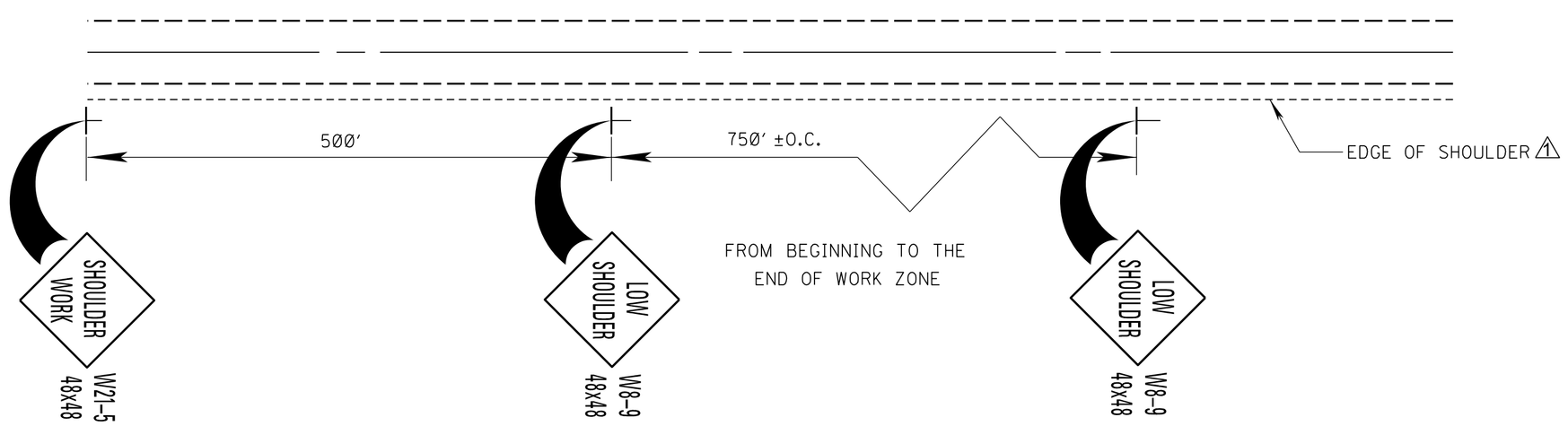

TYPICAL SHOULDER WORK #1
(SEE NOTE A–1 THIS SHEET)

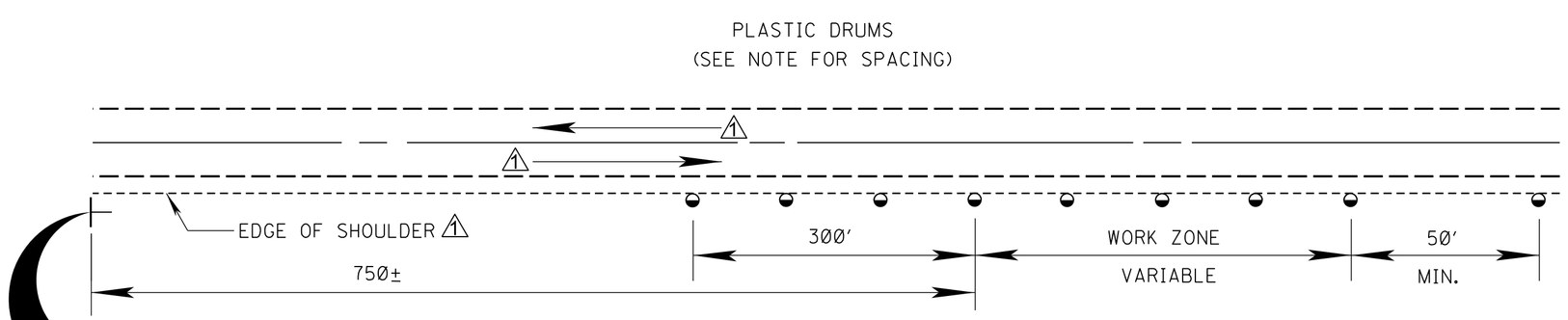

OR

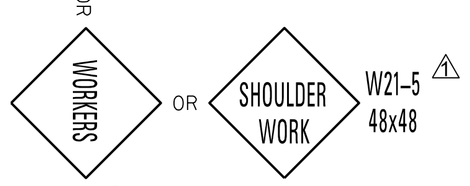

TYPICAL SHOULDER WORK #2

NOTE:
WORK OUTSIDE TWO (2) FOOT AND WITHIN TEN (10) FEET OF THE SHOULDER BREAK MAY BE PROTECTED BY PLACING DRUMS ALONG THE SHOULDER EDGE, 300 FEET PRIOR TO AND 50 FEET BEYOND THE WORK AREA, OR SEE NOTE A-3 THIS SHEET.

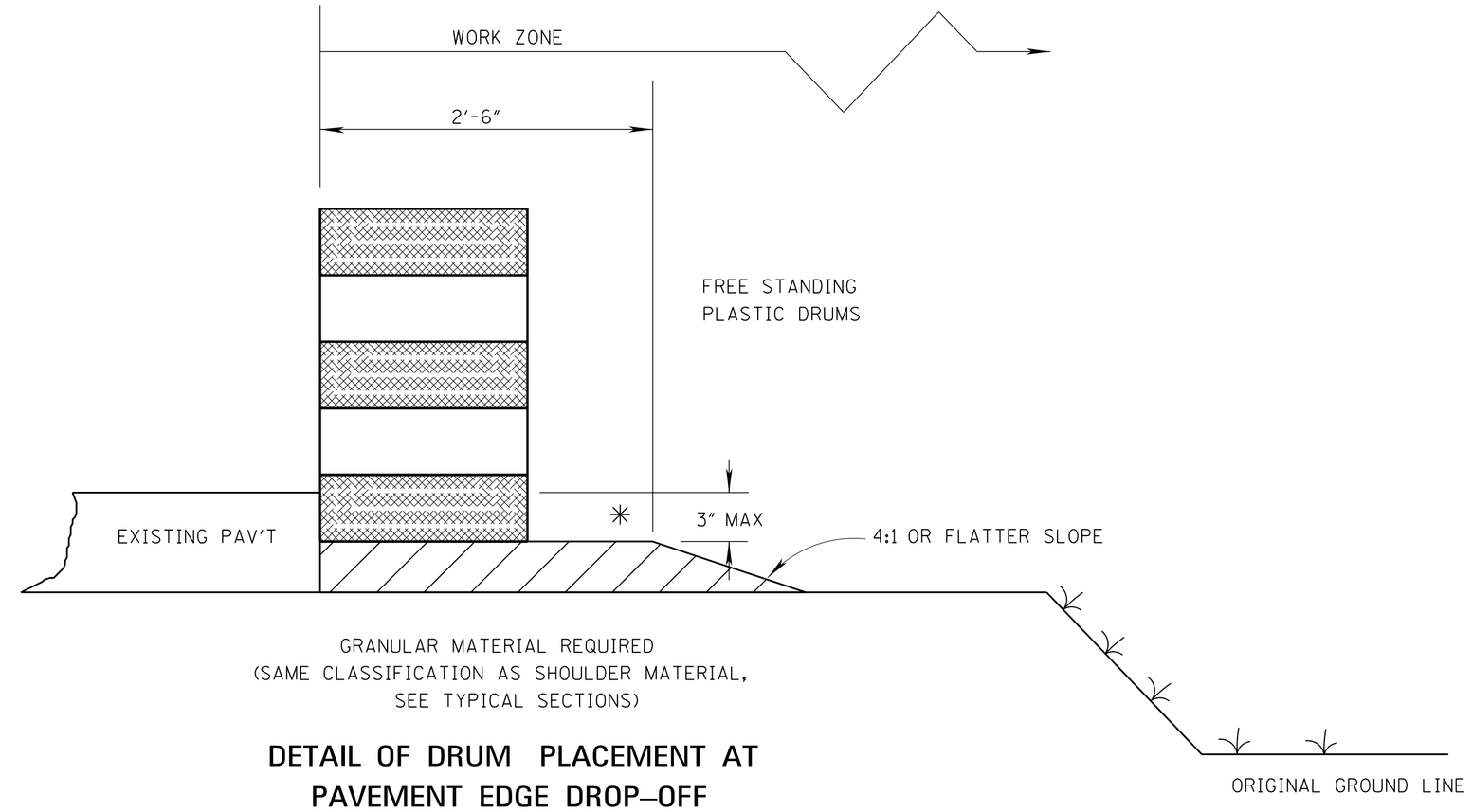

DETAIL OF DRUM PLACEMENT AT PAVEMENT EDGE DROP–OFF

NOTES:

✳ A. PAVEMENT EDGE DROP-OFF

1. IF LESS THAN TWO AND ONE QUARTER (2.25) INCHES-NO PROTECTION REQUIRED. PLACE A SHOULDER WORK SIGN (W21-5) 500 FEET IN ADVANCE OF WORK ZONE SHOULDER AND A LOW SHOULDER SIGN (W8-9) AT THE BEGINNING AND THROUGHOUT THE WORK ZONE @ (750′+O.C.).

△1 2. TWO AND ONE QUARTER TO THREE INCHES-PLACE DRUMS, VERTICAL PANELS OR BARRICADES EVERY 100 FEET ON TANGENT SECTIONS FOR SPEEDS OF 50 MILES PER HOUR OR GREATER. CONES MAY BE USED IN PLACE OF DRUMS, PANELS, AND BARRICADES DURING DAYLIGHT HOURS. FOR TANGENT SECTIONS WITH SPEEDS LESS THAN 50 MILES PER HOUR AND FOR CURVES, DEVICES SHOULD BE PLACED EVERY 50 FEET. SPACING FOR TAPERS SHOULD BE IN ACCORDANCE WITH THE MUTCD (1 / 3 L, WHERE L IS THE TAPER LENGTH IN FEET.)

3. GREATER THAN THREE (3) INCHES-POSITIVE SEPARATION OR WEDGE WITH 4:1 OR FLATTER SLOPE NEEDED. IF THERE IS EIGHT (8) FEET OR MORE DISTANCE BETWEEN THE EDGE OF TRAVEL LANE AND DROP-OFF, THEN DRUMS, PANELS OR BARRICADES MAY BE USED.

4. FOR TEMPORARY CONDITIONS, DROP-OFFS GREATER THAN THREE (3) INCHES MAY BE PROTECTED WITH DRUMS, VERTICAL PANELS OR BARRICADES FOR SHORT DISTANCES DURING DAYLIGHT HOURS WHILE WORK IS BEING DONE IN THE DROP-OFF AREA.

5. LESSER TREATMENTS THAN THOSE DESCRIBED ABOVE MAY BE CONSIDERED FOR LOW-VOLUME LOCAL STREETS.

△1 B. DRUM, VERTICAL PANEL, OR BARRICADE SPACING

1. TANGENTS = 2 X S
2. TAPERS = L / 3
   WHERE L = S X W
   L = TAPER LENGTH IN FEET
   △1 S = SPEED IN MPH (POSTED OR ANTICIPATED OPERATING SPEED)
   W = WIDTH OF OFFSET IN FEET

C. ALL TRAFFIC CONTROL ITEMS SHOWN ON THIS SHEET SHALL BE PAID FOR UNDER MAINTENANCE OF TRAFFIC.

TABLE VI-1. GUIDELINES FOR LENGTH OF LONGITUDINAL BUFFER SPACE

✳✳ SPEED (MPH)	LENGTH (FEET)	
20	115	△1
25	155	△1
30	200	△1
35	250	△1
40	305	△1
45	360	△1
50	425	△1
55	495	△1
60	570	△1
65	645	△1

✳✳ POSTED SPEED, OFF-PEAK 85 PERCENTILE SPEED PRIOR TO WORK STARTING, OR THE ANTICIPATED OPERATING SPEED IN MPH.

DATE	REVISION	BY
12/11/25	REVISED TEXT	STN

MISSISSIPPI DEPARTMENT OF TRANSPORTATION
ROADWAY DESIGN DIVISION
STANDARD PLAN

TRAFFIC CONTROL DETAILS DRUM PLACEMENT AND SHOULDER CLOSURE

MDOT MISSISSIPPI DEPARTMENT OF TRANSPORTATION

WORKING NUMBER TCP-16

ISSUE DATE: AUGUST 01, 2017

SHEET NUMBER 6366

SUMMARY OF REVISIONS (BRIDGE)						
DATE	1st ORDER	ADDENDUM	2nd ORDER	BY	SHEET(S)	DESCRIPTION
11/21/2025	X			JAF	8004 & 8005	Revised Riprap Placement Plan & Adjusted Quantities
11/21/2025	X			BJJ	8003	Revised Quantities
12/3/2025		X		JAF	8004-8007, 8009	Changed End Bent Pile Type
12/3/2025		X		BJJ	8003	Revised Quantities

ADDENDUM

DESIGNED BY: JACOB FRIESS
DETAILED BY: JACOB FRIESS
CHECKED BY: ALEX HAWKINS
DATE: 2026-01-27

FMS CON: 109082/301000
PROJECT NO.: STBG-9585-00(001)
COUNTY: NESHOBA

BRIDGE AT STA. 26+10.00
PLAN REVISIONS (BRIDGE)

DIR OF STRUCTURES, STATE BRIDGE ENGINEER - SCOTT WESTERFIELD, P.E.
DEP. DIR OF STRUCTURES, ASST. STATE BRIDGE ENGINEER - MICAH DEW, P.E.

WK. NO.
PRS-1

SHEET NO.
8002

SUMMARY OF QUANTITIES

PAY ITEM NO.	PAY ITEM	UNIT	QUANTITIES		
	Bridge Summary		PRELIMINARY	FINAL	
907-803-B001	Conventional Static Pile Load Test	EA	1		
803-D007	HP 14 x 89 Steel Piling	LF	1,375		2
907-803-I003	PDA Test Pile, HP Steel Pile	EA	2		
907-803-J001	Pile Restrike	EA	2		
907-804-A002	Bridge Concrete, Class AA	CY	53		
804-C275	25' Prestressed Concrete Beam, Type NEXT 18D	LF	224		
805-A001	Reinforcement	LBS	10,149		
907-807-A001	Ultra-High Performance Concrete	CY	3		
813-A004	Concrete Railing, 36"	LF	150		
815-A007	Loose Riprap, Size 300	TON	497		1
815-E001	Geotextile under Riprap	SY	458		1
907-823-A001	Preformed Joint Seal, Type I	LF	114		
907-828-A001	Hybrid Polymer Concrete Overlay	CY	6		

ADDENDUM

DESIGNED BY: *Barbara Jones, PE*

DETAILED BY:

CHECKED BY:

DATE: *2026-01-27*

FMS CON: */109082-301000*

PROJECT NO.: *STBG-9585-00(001)*

COUNTY: *NESHOBA*

MISSISSIPPI DEPARTMENT OF TRANSPORTATION
SUMMARY OF QUANTITIES
(BRIDGE ITEMS)

WK. NO.
SQ-BR-1

SHEET NO.
8003

ESTIMATED QUANTITIES

Item / Location	Conventional Static Pile Load Test (Each)	2 HP14x89 Steel H-Pile (L.F.)	PDA Test Pile (Each)	Pile Restrike (Each)	Class AA Bridge Concrete (C.Y.)	25 Ft. Prest. Conc. Beam NEXT 18D (L.F.)	Reinforce-ment (LBS)	Class UHPC Bridge Concrete (C.Y.)	Concrete Railing (L.F.)	1 Loose Riprap (300#) (Ton)	1 Geotextile Under Riprap (S.Y.)	Preformed Joint Seal, Type I (L.F.)	Hybrid Polymer Conc. Overlay (C.Y.)
Spans						224.25		3	150			114	6
End Bents		715	1	1	21.03		5,710.87			497	458		
Int. Bents	1	660	1	1	31.67		4,437.82						
Total	1	1375	2	2	52.70	224.25	10,148.69	3	150	497	458	114	6

REQUIRED ULTIMATE PILE BEARING CAPACITY AND TIP ELEVATION SCHEDULE

Bent No.	Pile Type	Req'd Bearing (Tons)	2 Pile Size	2 Estimated Length (ft.)	Min. Tip Elev.	LRFD Resistance Factor	Controlling Limit State
1	Steel H-Pile	53	HP14x89	45	411.5	0.65	Strength I
2	Steel H-Pile	66	HP14x89	60	396.0	0.65	Strength I
3	Steel H-Pile	66	HP14x89	60	396.0	0.65	Strength I
4	Steel H-Pile	53	HP14x89	50	411.5	0.65	Strength I

2 PDA TEST PILE SCHEDULE

Bent No.	Min. Length (ft.)	Tip Elevation
1	55	378.2152
2	70	363.2147

GENERAL NOTES:

Mississippi Standard Specifications for Road and Bridge Construction, 2017.
No change of plans will be permitted except by written approval of the Director of Structures, State Bridge Engineer. Minor changes in detail of design or construction procedure may be authorized by the Director of Structures, State Bridge Engineer provided such changes will not be cause for contract price adjustment.
Bridge concrete shall be class "AA" or Class "UHPC" as indicated in plans.
Railing expansion joint material shall be bituminous fiber type unless otherwise noted.
No payment will be allowed for excavation incidental to the construction of end bents.
Bar bending details shall be in accordance with "Manual of Standard Practice for Detailing Reinforced Concrete Structures" (ACI 315R-18).
Reinforcement order lists and required placing plans shall be furnished in accordance with Section 805 of the Mississippi Standard Specifications. Partial submittals are not acceptable.
Shop drawings of prestressed beams, including an erection plan, shall be submitted in duplicate to the Director of Structures, State Bridge Engineer for approval prior to the manufacture of beams.
The Fabricator shall provide camber data at release and immediately prior to shipping.
Concrete surfaces shall receive a Class 2 rubbed or spray finish in accordance with the specifications.
Reinforcing steel shall be ASTM A615, Grade 60, unless otherwise noted.
Work for which no pay item is provided in the proposal will not be paid for directly and compensation therefor will be included in the prices and payments for bid items.

PILE NOTES:

Test piles shall be driven as permanent piles at the location shown in the PDA TEST PILE SCHEDULE and will be paid for as test piles only.
The Director of Structures, State Bridge Engineer may authorize test piles driven outside the structural limits.
Test piles shall be driven as a continuous operation, to the bearing capacity and the tip elevations shown in the PDA TEST PILE SCHEDULE, unless otherwise directed by the Director of Structures, State Bridge Engineer.
Permanent piles shall be driven to an elevation no higher than the elevation shown in the REQUIRED ULTIMATE PILE BEARING CAPACITY AND TIP ELEVATION SCHEDULE.
The tip elevation of piling, for hydraulic structures, may be determined by the scour line, but under no circumstances shall be greater than the minimum tip elevation shown in the REQUIRED ULTIMATE PILE BEARING CAPACITY AND TIP ELEVATION SCHEDULE.
When feasible, bearing piles shall be driven full length and be spliced, only, as approved by the Director of Structures, State Bridge Engineer.
Prefabricated splices for H piles are not acceptable for test piles.
Welding shall be done by the ELECTRIC ARC process and shall comply with the ANSI/AWS D1.5 Bridge Welding Code. Welders shall be certified and electrodes shall be approved.
When loading tests are required, the maximum test load shall be one and one half (1½) times the minimum pile bearing capacity.
PDA test piles shall require a 1 day restrike unless otherwise directed by the Engineer.
Pile lengths and driving criteria shall be provided based on the results of the PDA test piles.
The required ultimate pile bearing shown in the REQUIRED ULTIMATE PILE BEARING AND TIP ELEVATION SCHEDULE includes the LRFD resistance factor for PDA of 0.65.
Pile hammer leads used for all PDA test piles and PDA restrikes shall be large enough to provide a minimum of 3" of clearance on each side of the pile in order to properly place and protect PDA gages.
Steel HP piles shall be driven with a maximum rated energy no less than 58,000 ft-lbs to the tip elevations specified unless the Contractor's drivability analysis utilizing the Contractor's selected alternative hammer is approved by the Director's of Structures, State Bridge Engineer.

NOTE:

In lieu of splice plates, prefabricated splicers may be used. Prefabricated splicers shall be submitted for approval by the Director of Structures, State Bridge Engineer.

NEXT BEAM NOTES:

The girder deflection diagrams shown in these plans were prepared and intended for design and estimation purposes only. Actual bridge girder deflections may differ from the deflection diagrams shown in these plans.
It is the Contractor's responsibility to construct the bridge to meet the requirements of the plans and specifications including, but not limited to, the requirements for bridge deck smoothness.
Prior to formwork construction, the Contractor shall submit three (3) copies of a proposed BRIDGE SUPERSTRUCTURE CONSTRUCTION PLAN to the Director of Structures, State Bridge Engineer for review, through the Project Engineer. This submittal shall include all calculations, assumptions and parameters used by the Contractor to determine bridge girder deflections and form grade elevations. This submittal shall also include an erection and construction procedure that addresses the construction means and methodologies used by the Contractor and shall consider effects including, but not limited to, construction phasing, pouring schedules, applied permanent and construction loading, and shall include calculations and details of temporary girder bracing systems used to ensure girder stability and to counter the effects of girder tilt.
After girder erection and prior to Hybrid Polymer Concrete installation, the Contractor shall submit overlay thickness verification calculations for each girder. These calculations shall include a comparison of the erected girder top flange profiles versus the plan overlay grade elevations over each girder plus the anticipated girder deflection due to applied permanent dead load and creep.
Three (3) copies of the Hybrid Polymer Overlay Concrete thickness verification calculations and any proposed remediation measures to correct for thin overlay areas shall be submitted to the Director of Structures, State Bridge Engineer for review, through the Project Engineer.
The BRIDGE SUPERSTRUCTURE CONSTRUCTION PLAN and the Hybrid Polymer Concrete Overlay thickness verification calculations shall be prepared and stamped by a Mississippi Registered Professional Engineer.

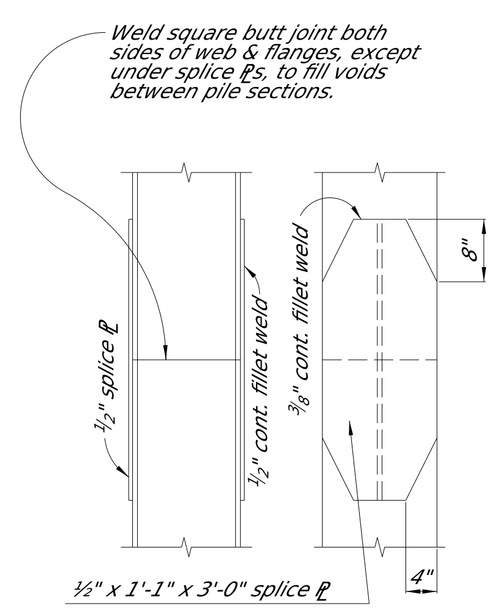

PILE SPLICE DETAIL
HP14x89 steel piles

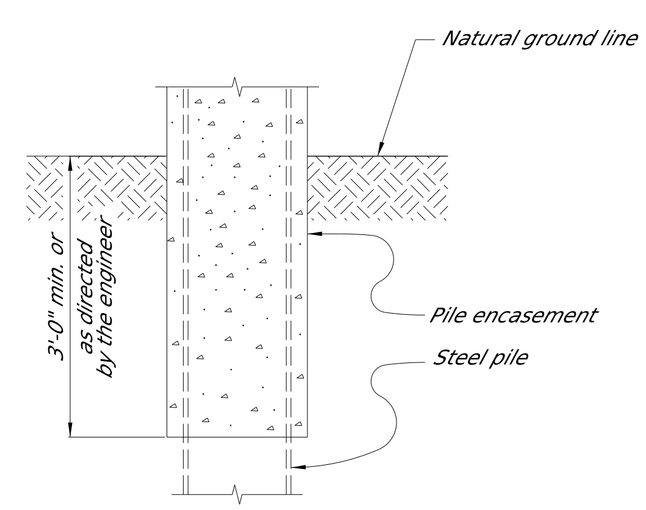

PILE ENCASEMENT DETAIL
HP14x89 steel piles

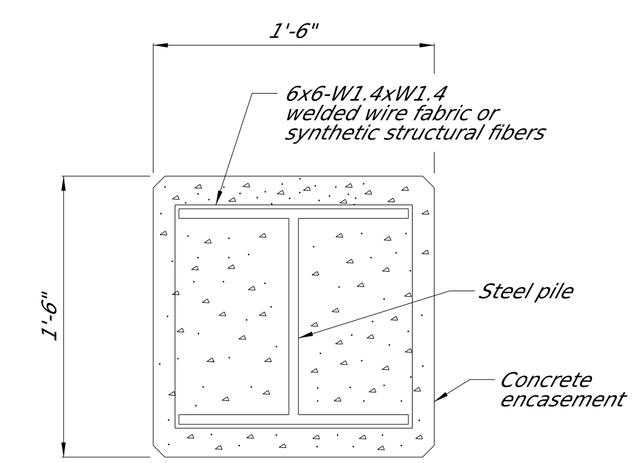

NOTE:

Concrete for pile encasement shall be class "AA" and will be paid for as bridge concrete.
Class "AA" concrete with #67 aggregate may be used for pile encasement.
Pile encasement shall be reinforced with 6x6-W1.4xW1.4 welded wire fabric weighing 0.21 lbs. per sq. ft. (not a separate pay item) or synthetic structural fiber applied at a dosage rate of 4 lbs. per cubic yd. Synthetic structural fiber shall meet requirements of Special Provision No. 907-711 (not a separate pay item).
Chamfer corners of encasement ¾".

PILE ENCASEMENT DETAIL
HP14x89 steel piles

DEPARTMENT OF TRANSPORTATION MISSISSIPPI

ADDENDUM

DESIGNED BY: JACOB FRIESS
DETAILED BY: JACOB FRIESS
CHECKED BY: ALEX HAWKINS
DATE: 2026-01-27

FMS CON: 109082/301000
PROJECT NO.: STBG-9585-00(001)
COUNTY: NESHOBA

BRIDGE AT STA. 26+10.00
GENERAL NOTES & ESTIMATED QUANTITIES

DIR OF STRUCTURES, STATE BRIDGE ENGINEER - SCOTT WESTERFIELD, P.E.
DEP. DIR OF STRUCTURES, ASST. STATE BRIDGE ENGINEER - MICAH DEW, P.E.

WK. NO. 1 OF 15
SHEET NO. 8004

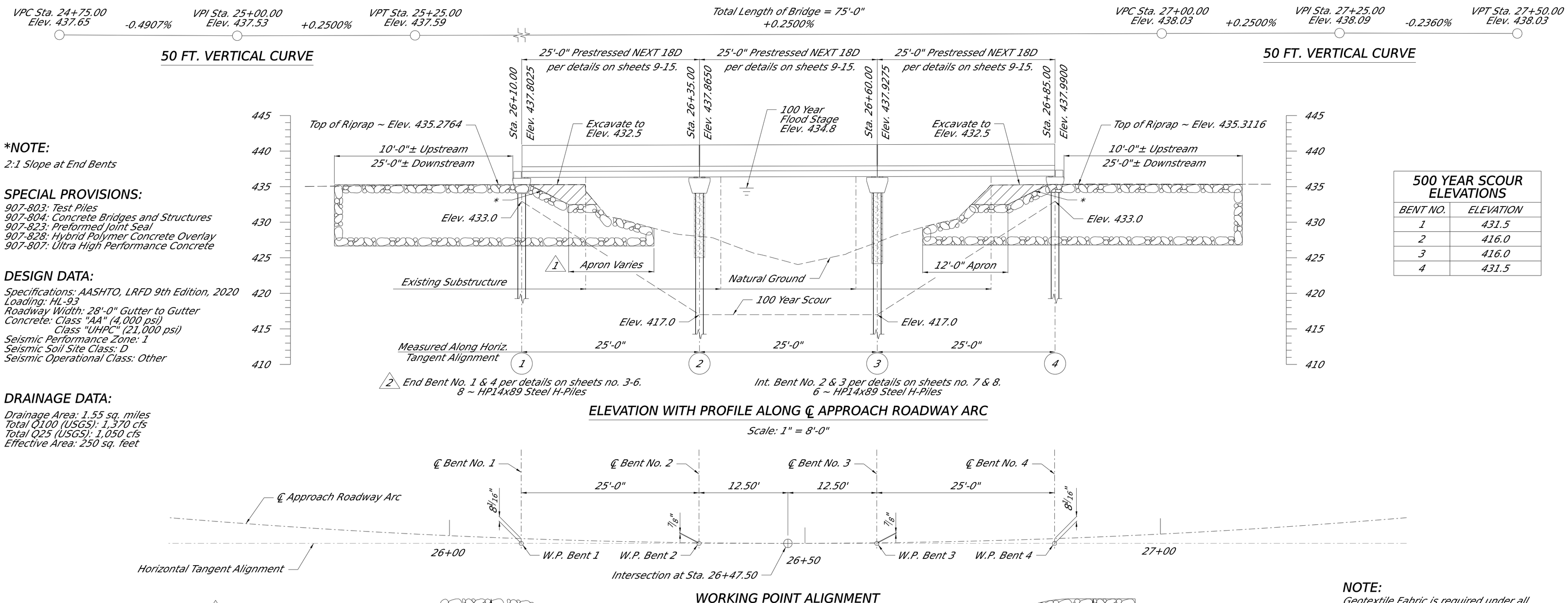

ELEVATION WITH PROFILE ALONG ℄ APPROACH ROADWAY ARC

Scale: 1" = 8'-0"

*NOTE:

2:1 Slope at End Bents

SPECIAL PROVISIONS:

907-803: Test Piles
907-804: Concrete Bridges and Structures
907-823: Preformed Joint Seal
907-828: Hybrid Polymer Concrete Overlay
907-807: Ultra High Performance Concrete

DESIGN DATA:

Specifications: AASHTO, LRFD 9th Edition, 2020
Loading: HL-93
Roadway Width: 28'-0" Gutter to Gutter
Concrete: Class "AA" (4,000 psi)
Class "UHPC" (21,000 psi)
Seismic Performance Zone: 1
Seismic Soil Site Class: D
Seismic Operational Class: Other

DRAINAGE DATA:

Drainage Area: 1.55 sq. miles
Total Q100 (USGS): 1,370 cfs
Total Q25 (USGS): 1,050 cfs
Effective Area: 250 sq. feet

500 YEAR SCOUR ELEVATIONS	
BENT NO.	ELEVATION
1	431.5
2	416.0
3	416.0
4	431.5

WORKING POINT ALIGNMENT

Scale: 1" = 8'-0"

NOTE:

Bridge shall be Built Perpendicular to the Horizontal Tangent at Sta. 26+47.50 as shown on this sheet. All Finish Grade elevations shown on this sheet are measured along ℄ Approach Roadway Arc, and not the Horizontal Tangent Alignment.

1 **NOTE:

Riprap shall be tapered 2'-0" at end bent no. 1 to avoid confliction with existing utility line.

NOTE:

Geotextile Fabric is required under all riprap. All riprap and geotextile fabric shown on the bridge plans are included in the bridge quantities.

NOTE:

For general notes, quantities, and additional details, see sheet no. 1.

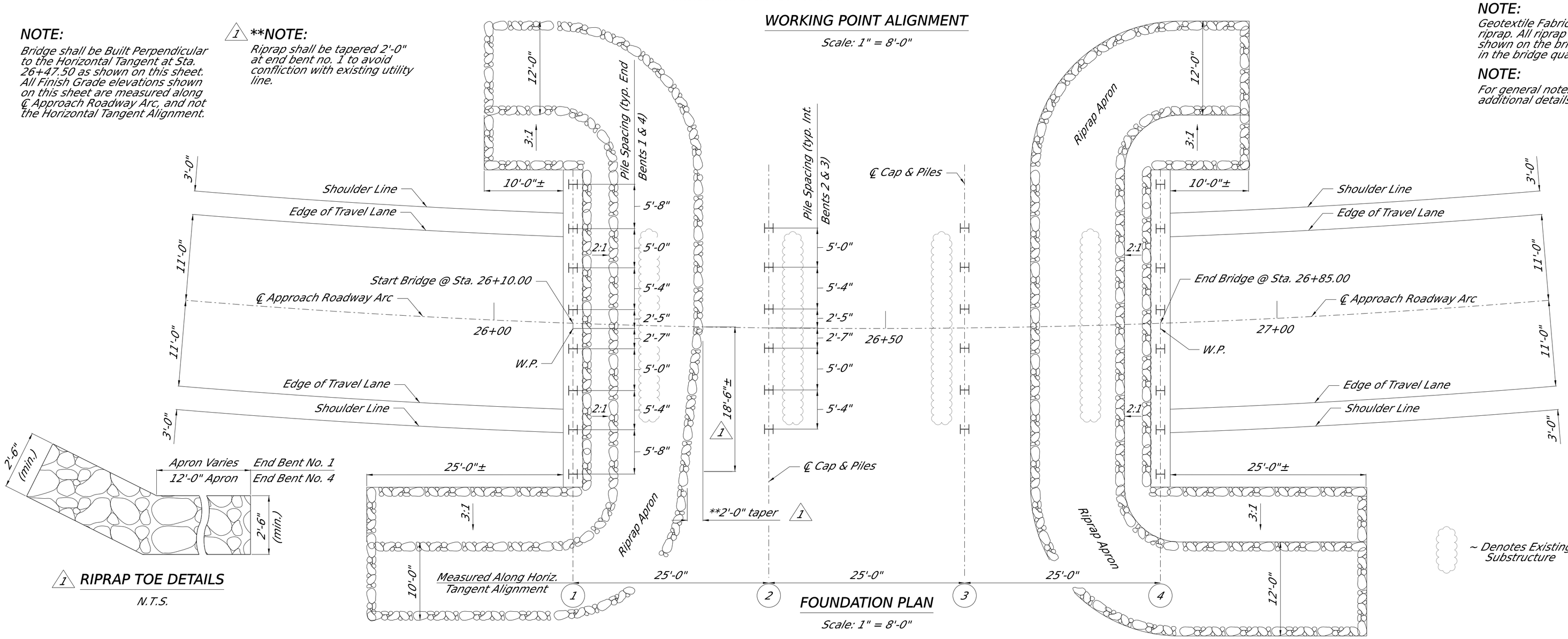

FOUNDATION PLAN

Scale: 1" = 8'-0"

1 RIPRAP TOE DETAILS

N.T.S.

CURVE DATA:

Δ = 21°16'27.262" (LT)
D = 5°27'24.267"
L = 389.871'
T = 197.206'
R = 1050.00'
BK S46°40'07.704"E
AH S67°56'34.965"E
PC = 24+86.680
PT = 28+76.551

ADDENDUM

DESIGNED BY: JACOB FRIESS
DETAILED BY: JACOB FRIESS
CHECKED BY: ALEX HAWKINS
DATE: 2026-01-27

FMS CON: 109082/301000
PROJECT NO.: STBG-9585-00(001)
COUNTY: NESHOBA

BRIDGE AT STA. 26+10.00
SR 486 OVER KENTAWKA CANAL TRIBUTARY
LAYOUT & FOUNDATION

DIR OF STRUCTURES, STATE BRIDGE ENGINEER - SCOTT WESTERFIELD, P.E.
DEP. DIR OF STRUCTURES, ASST. STATE BRIDGE ENGINEER - MICAH DEW, P.E.

WK. NO.
2 OF 15

SHEET NO.
8005

PLAN SHEET

12/3/2025 8:08:59 AM 90% Plans.dgn

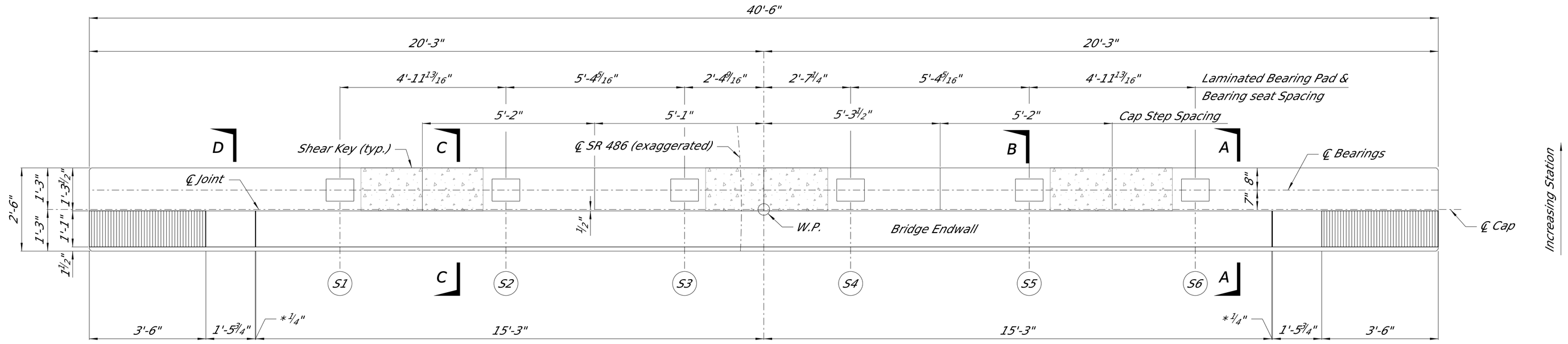

PLAN OF END BENT NO. 1

Showing Concrete Dimensions, Bearing Seats, and Laminated Bearing Pad

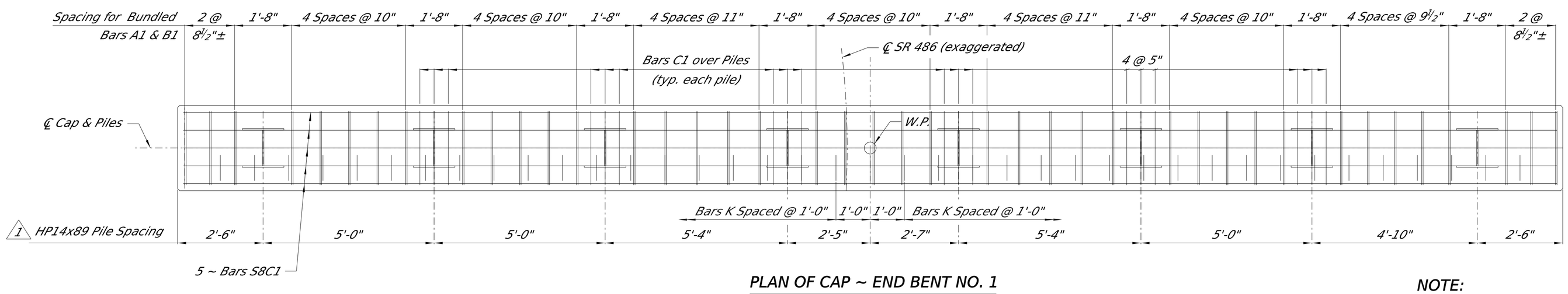

PLAN OF CAP ~ END BENT NO. 1

Showing Reinforcement in Top of Cap and Pile Spacing

NOTE:

Piles shall be of the size, type, and driven to the minimum bearing capacity as shown on sheet no. 1.

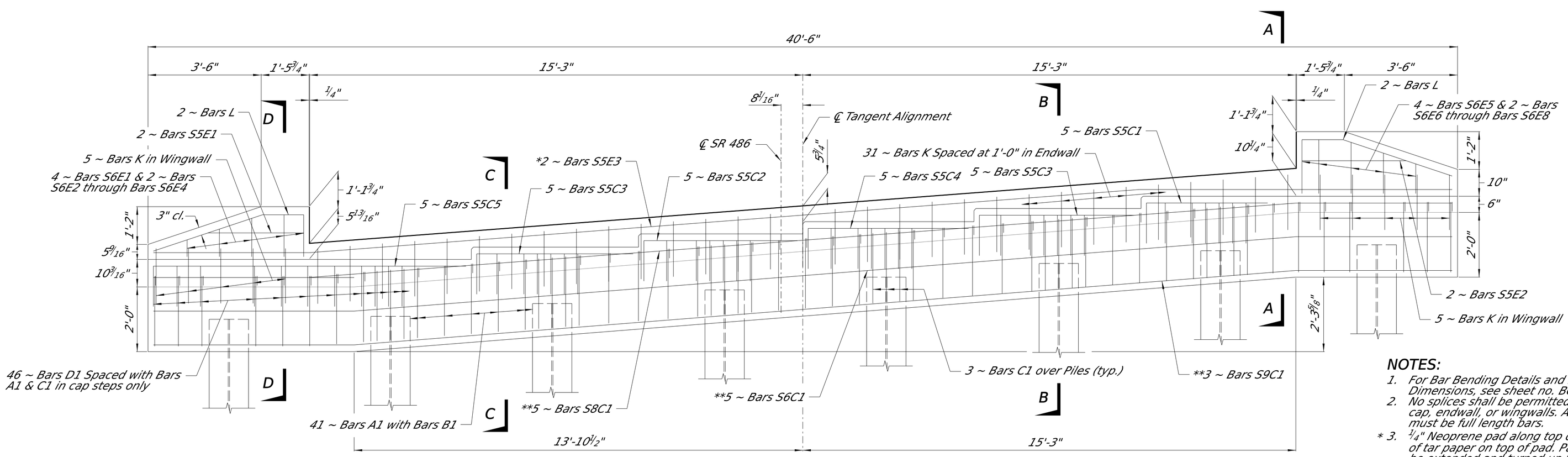

ELEVATION OF CAP ~ FROM FILL SIDE

Showing concrete dimensions, reinforcement, & cap steps

NOTES:

1. For Bar Bending Details and Reinforcement Bar Dimensions, see sheet no. BOR-1.
2. No splices shall be permitted in the abutment cap, endwall, or wingwalls. All reinforcement must be full length bars.

* 3. 1/4" Neoprene pad along top of endwall with 2 layers of tar paper on top of pad. Pad and tar paper shall be extended and turned up between approach slab and wingwalls as shown on this sheet.

** 4. Bars are to be field-bent to fit.

5. Vertical dimensions shown are measured along fill face of end wall (bridge end). For general notes and other details, see sheet no. 1.

DEPARTMENT OF TRANSPORTATION MISSISSIPPI

ADDENDUM

DESIGNED BY: JACOB FRIESS
DETAILED BY: JACOB FRIESS
CHECKED BY: ALEX HAWKINS
DATE: 2026-01-27

FMS CON: 109082/301000
PROJECT NO.: STBG-9585-00(001)
COUNTY: NESHOBA

BRIDGE AT STA. 26+10.00
END BENT NO. 1 DETAILS

DIR OF STRUCTURES, STATE BRIDGE ENGINEER - SCOTT WESTERFIELD, P.E.
DEP. DIR OF STRUCTURES, ASST. STATE BRIDGE ENGINEER - MICAH DEW, P.E.

WK. NO.
3 OF 15

SHEET NO.
8006

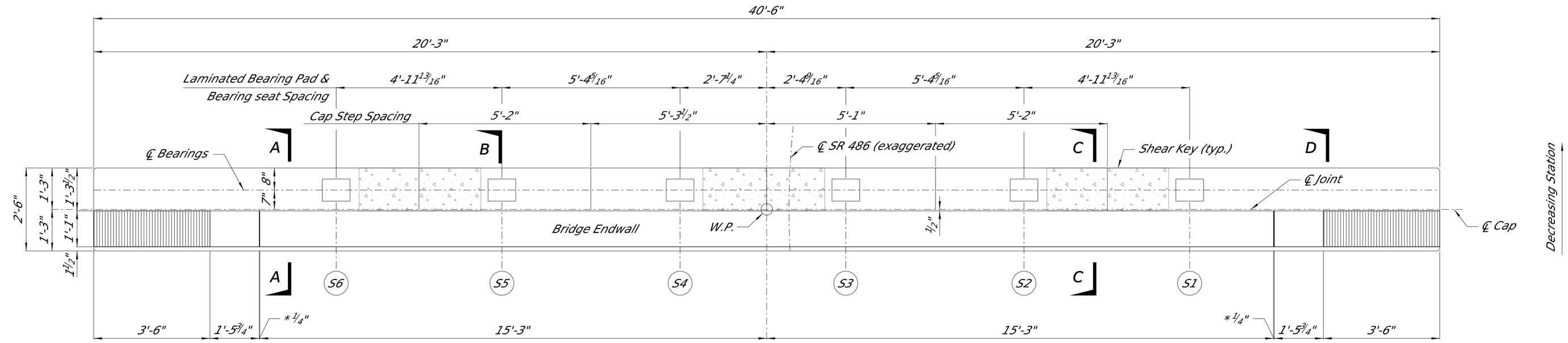

PLAN OF END BENT NO. 4

Showing Concrete Dimensions, Bearing Seats, and Laminated Bearing Pad

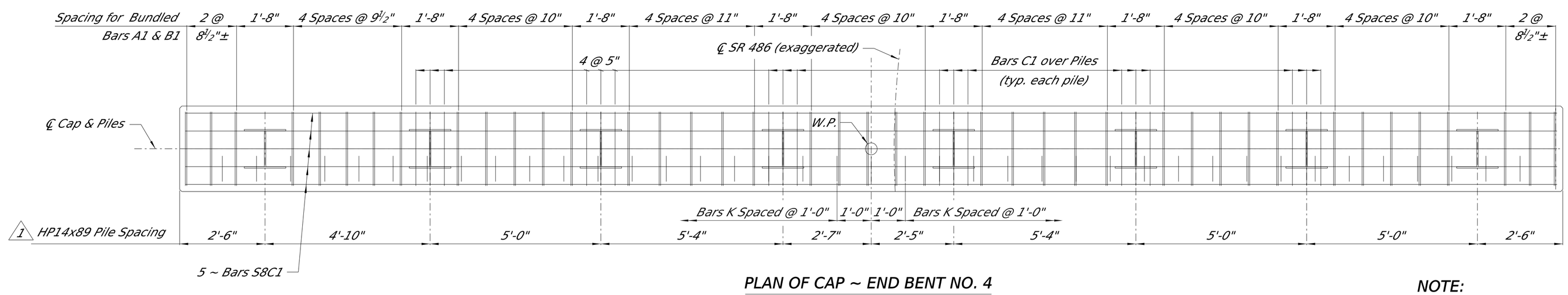

PLAN OF CAP ~ END BENT NO. 4

Showing Reinforcement in Top of Cap and Pile Spacing

NOTE:

Piles shall be of the size, type, and driven to the minimum bearing capacity as shown on sheet no. 1.

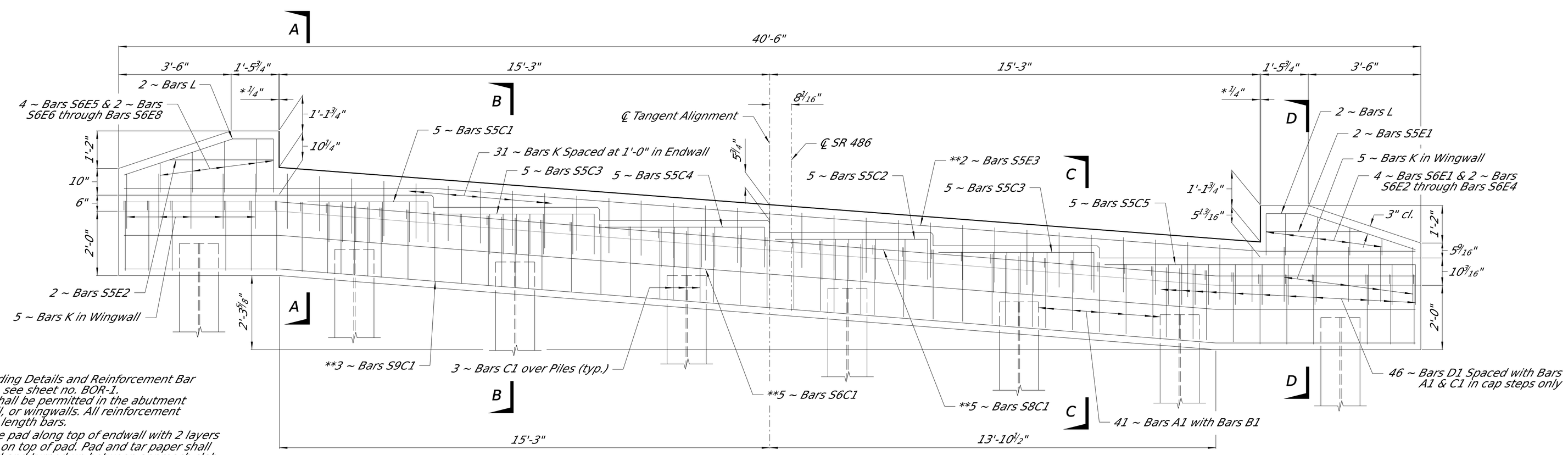

ELEVATION OF CAP ~ FROM FILL SIDE

Showing concrete dimensions, reinforcement, & cap steps

NOTES:

1. For Bar Bending Details and Reinforcement Bar Dimensions, see sheet no. BOR-1.
2. No splices shall be permitted in the abutment cap, endwall, or wingwalls. All reinforcement must be full length bars.

* 3. 1/4" Neoprene pad along top of endwall with 2 layers of tar paper on top of pad. Pad and tar paper shall be extended and turned up between approach slab and wingwalls as shown on this sheet.

** 4. Bars are to be field-bent to fit.

5. Vertical dimensions shown are measured along fill face of end wall (bridge end). For general notes and other details, see sheet no. 1.

ADDENDUM

DESIGNED BY: JACOB FRIESS
DETAILED BY: JACOB FRIESS
CHECKED BY: ALEX HAWKINS
DATE: 2026-01-27

FMS CON: 109082/301000
PROJECT NO.: STBG-9585-00(001)
COUNTY: NESHOBA

BRIDGE AT STA. 26+10.00
END BENT NO. 4 DETAILS

DIR OF STRUCTURES, STATE BRIDGE ENGINEER - SCOTT WESTERFIELD, P.E.
DEP. DIR OF STRUCTURES, ASST. STATE BRIDGE ENGINEER - MICAH DEW, P.E.

WK. NO.
4 OF 15

SHEET NO.
8007

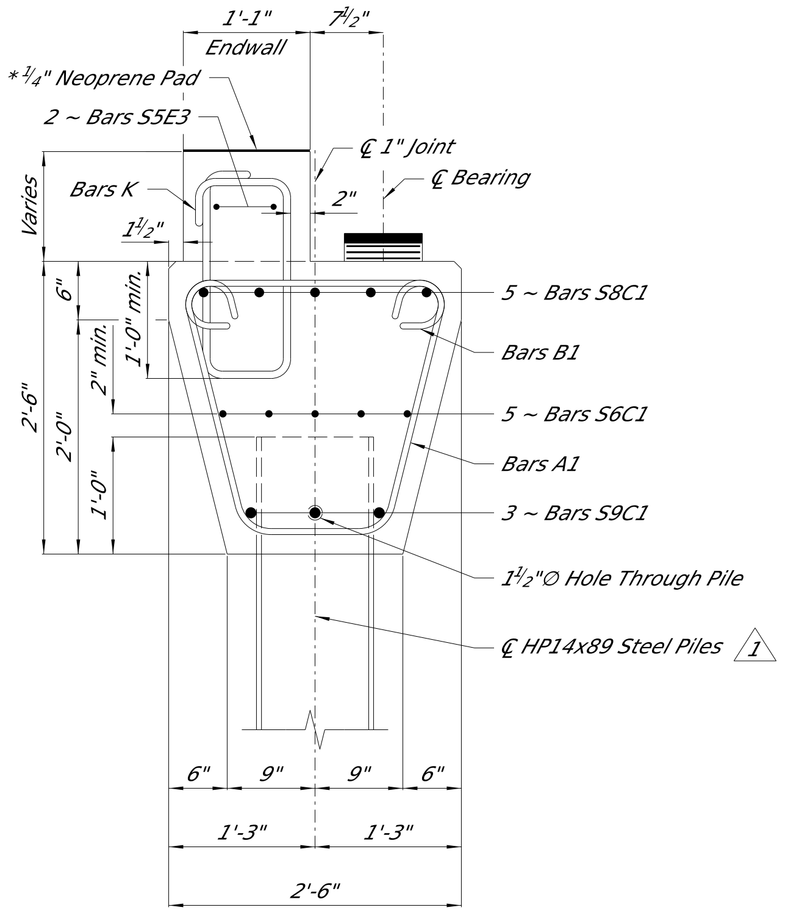

SECTION A-A

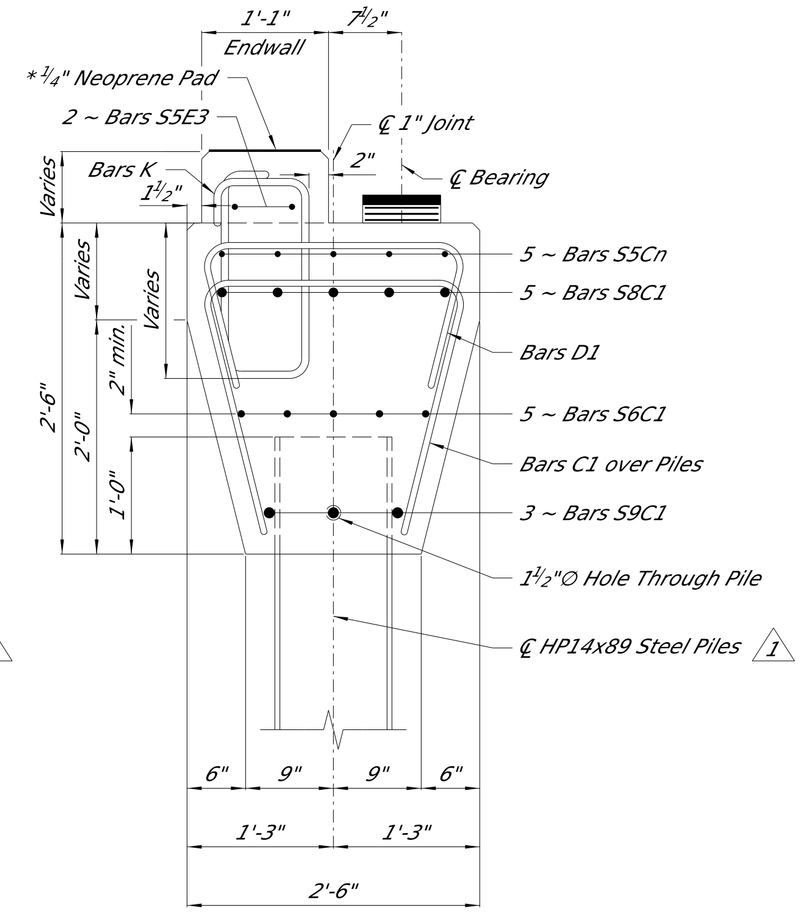

SECTION B-B

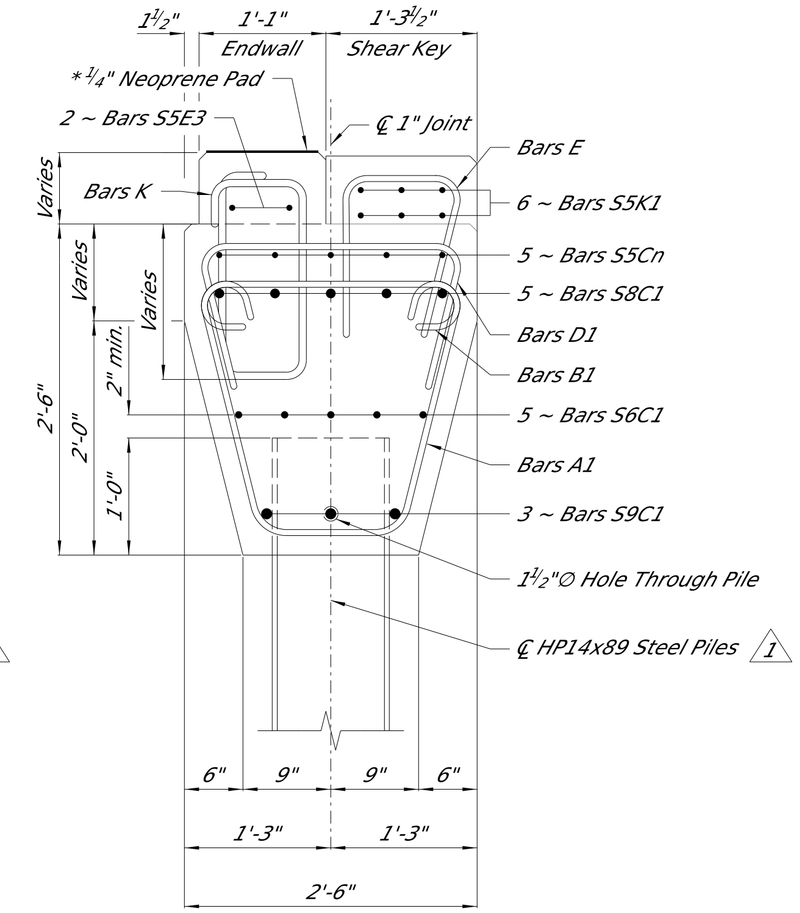

SECTION C-C

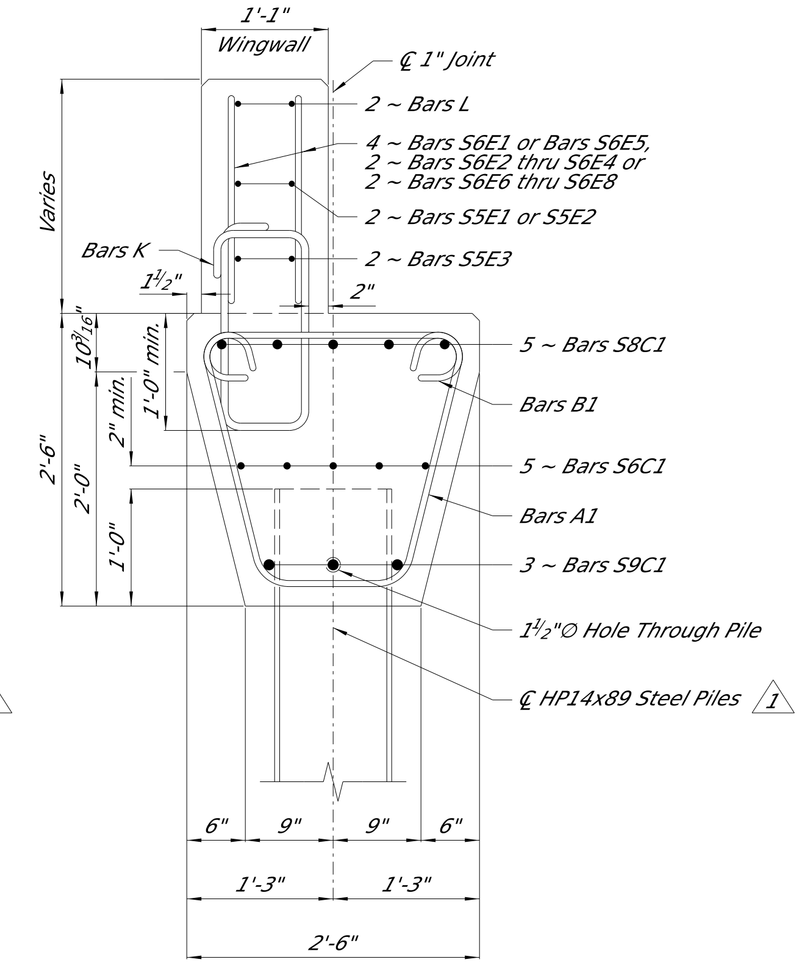

SECTION D-D

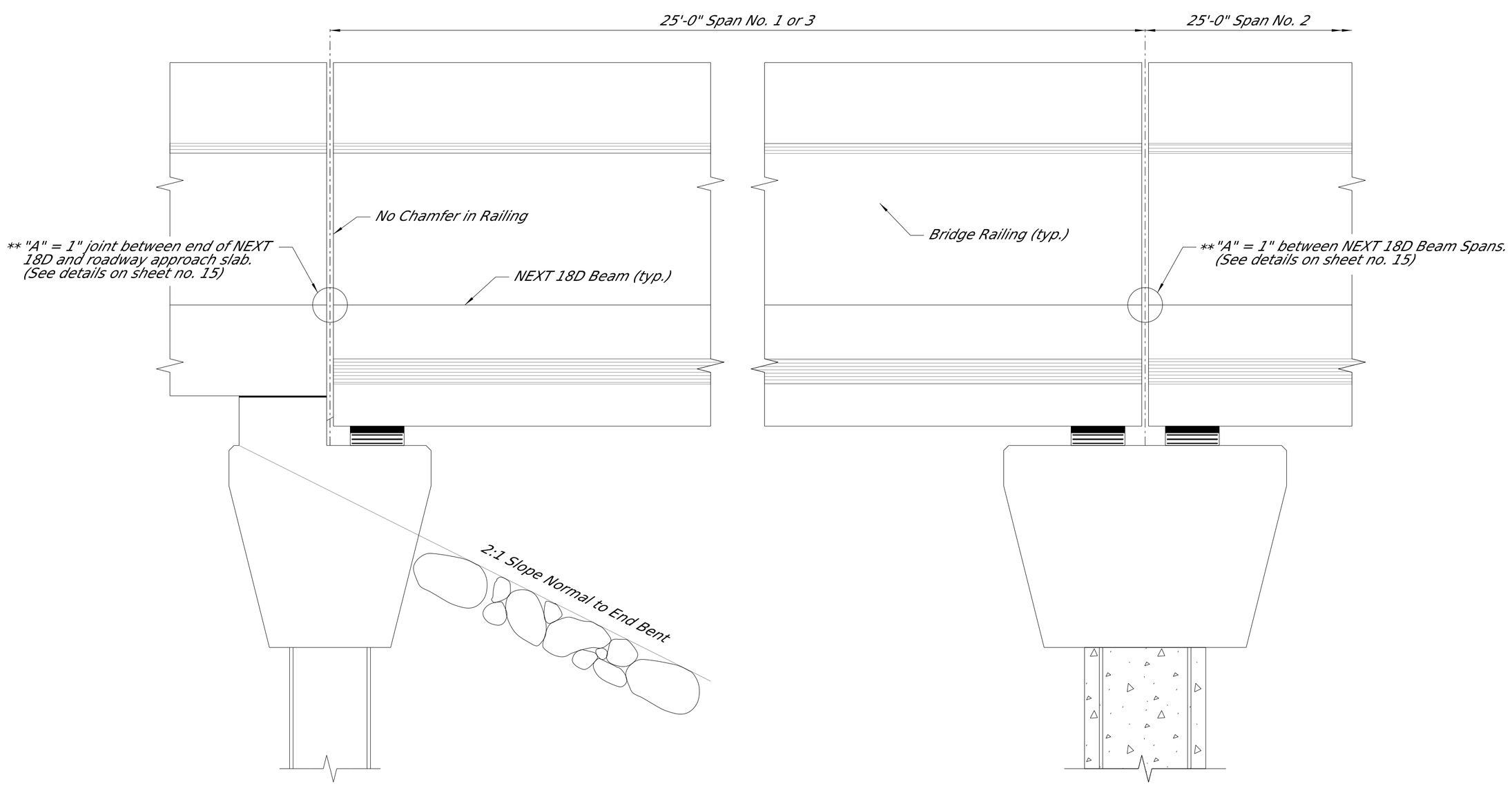

END ELEVATION

INTERMEDIATE ELEVATION

NOTES:

* 1. ¼" Neoprene pad along top of endwall with 2 layers of tar paper on top of pad. Pad and tar paper shall be extended and turned up between approach slab and wingwalls as shown on sheets no. 3-4.

** 2. ¼" seat required. See joint sealing details on sheet no. 15.

3. Concrete encasements around HP 14x89 piles at intermediate bents shall be poured monolithic with the bent cap concrete.
4. Any work and materials associated with the installation of the pile encasements at the intermediate bents will not be paid for separately but will be considered subsidiary to the item Class "AA" Concrete.
5. All concrete in the bent caps shall be Class "AA".
6. Chamfer all edges ¾" unless otherwise stated.
7. Endwall shall be constructed after placement of NEXT 18D Beams.
8. Piles for end bents shall not be driven until bridge end fill has been constructed to grade.
9. Dimensions for reinforcing steel to concrete surfaces are clear dimensions.

DEPARTMENT OF TRANSPORTATION MISSISSIPPI

ADDENDUM

DESIGNED BY: JACOB FRIESS
DETAILED BY: JACOB FRIESS
CHECKED BY: ALEX HAWKINS
DATE: 2026-01-27

FMS CON: 109082/301000
PROJECT NO.: STBG-9585-00(001)
COUNTY: NESHOBA

BRIDGE AT STA. 26+10.00
ADDITIONAL END BENT DETAILS (2)

DIR OF STRUCTURES, STATE BRIDGE ENGINEER - SCOTT WESTERFIELD, P.E.
DEP. DIR OF STRUCTURES, ASST. STATE BRIDGE ENGINEER - MICAH DEW, P.E.

WK. NO.
6 OF 15

SHEET NO.
8009