SECTION 905 -- PROPOSAL (CONTINUED)

I (We) hereby certify by digital signature and electronic submission via Bid Express of the Section 905 proposal below, that all certifications, disclosures and affidavits incorporated herein are deemed to be duly executed in the aggregate, fully enforceable and binding upon delivery of the bid proposal. I (We) further acknowledge that this certification shall not extend to the bid bond or alternate security which must be separately executed for the benefit of the Commission. This signature does not cure deficiencies in any required certifications, disclosures and/or affidavits. I (We) also acknowledge the right of the Commission to require full and final execution on any certification, disclosure or affidavit contained in the proposal at the Commission's election upon award. Failure to so execute at the Commission's request within the time allowed in the Standard Specifications for execution of all contract documents will result in forfeiture of the bid bond or alternate security.

Bidder acknowledges receipt of and has added to and made a part of the proposal and contract documents the following addendum (addenda):

ADDENDUM NO.	1	DATED	1/20/2026	ADDENDUM NO.		DATED	
ADDENDUM NO		DATED		ADDENDUM NO.		DATED	
ADDENDUM NO		DATED		ADDENDUM NO.		DATED	

Number	Description
1	Revised Table of Contents; Deleted Notice to Bidder No. 5750; Revised Wage Rates; Revised or Added Plan Sheet Nos. 1, 2, 6051, 6055, 6056, 6059, 6061, 6062, 6065, 6301, 6303-6306, 6314, 6316,6352, 6358, 6359, 6362, 6363 & 6366; Amendment EBSx Download Required.

TOTAL ADDENDA: 1
(Must agree with total addenda issued prior to opening of bids)

Respectfully Submitted,

DATE _____

_____
Contractor

BY _____
Signature

TITLE _____

ADDRESS _____

CITY, STATE, ZIP _____

PHONE _____

FAX _____

E-MAIL _____

(To be filled in if a corporation)

Our corporation is chartered under the Laws of the State of _____ and the names, titles and business addresses of the executives are as follows:

_____
President Address

_____
Secretary Address

_____
Treasurer Address

The following is my (our) itemized proposal.

NHPP-9432-01(002)/ 109562301000

Itawamba County(ies)

Revised 01/26/2016

For Informational Purposes Only

MISSISSIPPI DEPARTMENT OF TRANSPORTATION
TABLE OF CONTENTS

PROJECT: NHPP-9432-01(002)/109562301 - Itawamba

Section 901 - Advertisement

Section 904 - Notice to Bidders

#1	Governing Specification, w/ Supplement
#2	Status of ROW, w/ Attachments
#3	Final Cleanup
#296	Reduced Speed Limit Signs
#445	Mississippi Agent or Qualified Nonresident Agent
#447	Traffic on Milled Surface in Rural Areas
#516	Errata and Modifications to the 2017 Standard Specifications
#1225	Early Notice to Proceed
#1226	Material Storage Under Bridges
#1241	Fuel and Material Adjustments
#1434	Erosion Control Plan
#1878	Storm Water Discharge Associated with Construction Activities (≥1 and <5 Acres)
#2172	App for Storm Water Reports
#2206	MASH Compliant Devices
#2273	Mississippi Special Fuel Tax Law
#2954	Reflective Sheeting for Signs
#3676	Asphalt Gyratory Compactor Internal Angle Calibration
#4113	Unique Entity ID Requirement For Federal Funded Projects
#4702	App for Traffic Control Report
#5086	Detail of Square Tube Sign Posts
#5551	Federal Bridge Formula
#5570	Special Provisions Related to Concrete
#7304	Erosion Control Contract Compliance
#7510	Contract Time
#7511	Specialty Items
#7578	Obligation Date

906 Required Federal Contract Provisions -- FHWA 1273, w/Supplements

Section 907 - Special Provisions

907-101-1	Definitions and Terms
907-102-2	Bidding Requirements and Conditions
907-104-2	Minor Alterations to the Contract
907-105-2	Control of Work
907-106-4	Control of Materials
907-107-2	Contractor's Erosion Control Plan
907-108-4	Subletting of Contract
907-108-6	Default and Termination of Contract
907-109-5	Measurement and Payment
907-234-1	Silt Fence
907-401-2	Asphalt Pavements - General
907-403-4	Asphalt Pavements

PROJECT: NHPP-9432-01(002)/109562301 - Itawamba

907-601-1	Structural Concrete
907-605-1	Underdrains
907-618-12	Traffic Control Management
907-626-12	Thermoplastic Traffic Markings
907-627-1	Raised Pavement Markings
907-630-1	Remove and Reset Signs
907-700-2	Materials and Tests w/Attachment
907-701-4	Hydraulic Cement, w/ Supplement
907-702-4	Bituminous Materials
907-703-2	Gradation
907-705-1	Stone Riprap
907-707-3	Joint Materials
907-708-4	Concrete Pipe
907-711-2	Plain Steel Wire
907-712-1	Fence and Guardrail
907-714-4	Miscellaneous Materials
907-718-1	Timber and Dimension Lumber
907-720-4	Pavement Marking Materials
907-721-4	Materials for Signing
907-799-1	Hydraulic Cement Mixtures

Section 905 - Proposal, Proposal Bid Items, Combination Bid Proposal
Certification of Performance - Prior Federal-Aid Contracts
Certification Regarding Non-Collusion, Debarment and Suspension
SAM.GOV Registration and Unique Entity ID
Section 902 - Contract Form
Section 903 - Contract Bond Forms

Progress Schedule

(REVISIONS TO THE ABOVE WILL BE INDICATED ON THE SECOND SHEET
OF SECTION 905 AS ADDENDA)

01/20/2026 01:35 PM

"General Decision Number: MS20260091 01/02/2026

Superseded General Decision Number: MS20250091

State: Mississippi

Construction Type: Highway

County: Itawamba County in Mississippi.

HIGHWAY CONSTRUCTION PROJECTS

Modification Number	Publication Date
0	01/02/2026

SUMS2010-014 08/04/2014

	Rates	Fringes
CARPENTER (Form Work Only)	$ 14.13	0.00
CARPENTER, Excludes Form Work	$ 13.49	0.00
CEMENT MASON/CONCRETE FINISHER	$ 13.70	0.00
ELECTRICIAN	$ 21.80	7.93
HIGHWAY/PARKING LOT STRIPING: Truck Driver (Line Striping Truck)	$ 15.48	0.00
INSTALLER - GUARDRAIL	$ 11.51	0.00
IRONWORKER, REINFORCING	$ 14.82	0.00
LABORER: Asphalt, Includes Raker, Shoveler, Spreader and Distributor	$ 10.39	0.00
LABORER: Common or General	$ 10.22	0.00
LABORER: Concrete Worker	$ 10.69	0.00
LABORER: Flagger	$ 8.00	0.00
LABORER: Grade Checker	$ 12.77	0.00
LABORER: Landscape	$ 9.83	0.00
LABORER: Mason Tender - Cement/Concrete	$ 11.08	0.00
LABORER: Pipelayer	$ 10.76	0.00
LABORER: Laborer-Cones/ Barricades/Barrels - Setter/Mover/Sweeper	$ 10.38	0.00
OPERATOR: Asphalt Spreader	$ 16.03	0.00
OPERATOR: Backhoe/Excavator/Trackhoe	$ 13.42	0.00
OPERATOR: Boring Machine	$ 15.14	0.00

OPERATOR: Broom/Sweeper.....$ 10.94 0.00

OPERATOR: Bulldozer.....$ 14.38 0.00

OPERATOR: Concrete Saw.....$ 15.68 0.00

OPERATOR: Crane.....$ 18.32 0.00

OPERATOR: Distributor.....$ 12.59 0.00

OPERATOR: Drill.....$ 19.22 0.00

OPERATOR: Grader/Blade.....$ 14.13 0.00

OPERATOR: Loader.....$ 11.05 0.00

OPERATOR: Mechanic.....$ 16.00 0.00

OPERATOR: Milling Machine.....$ 15.12 0.00

OPERATOR: Oiler.....$ 12.33 0.00

OPERATOR: Paver (Asphalt,
Aggregate, and Concrete).....$ 16.47 0.00

OPERATOR: Piledriver.....$ 15.13 0.00

OPERATOR: Roller (All Types)....$ 11.54 0.00

OPERATOR: Scraper.....$ 13.15 0.00

OPERATOR: Tractor.....$ 10.22 0.00

OPERATOR: Trencher.....$ 15.00 0.00

TRUCK DRIVER: Flatbed Truck.....$ 13.79 0.00

TRUCK DRIVER: Lowboy Truck.....$ 11.00 0.00

TRUCK DRIVER: Mechanic.....$ 14.23 0.00

TRUCK DRIVER: Off the Road
Truck.....$ 12.29 0.00

TRUCK DRIVER: Water Truck.....$ 10.58 0.00

TRUCK DRIVER: Dump Truck (All
Types).....$ 10.49 0.00

TRUCK DRIVER: Semi/Trailer
Truck.....$ 15.81 0.00

WELDERS - Receive rate prescribed for craft performing
operation to which welding is incidental.

==========

Note: Executive Order (EO) 13706, Establishing Paid Sick Leave
for Federal Contractors applies to all contracts subject to the
Davis-Bacon Act for which the contract is awarded (and any
solicitation was issued) on or after January 1, 2017. If this
contract is covered by the EO, the contractor must provide
employees with 1 hour of paid sick leave for every 30 hours

they work, up to 56 hours of paid sick leave each year. Employees must be permitted to use paid sick leave for their own illness, injury or other health-related needs, including preventive care; to assist a family member (or person who is like family to the employee) who is ill, injured, or has other health-related needs, including preventive care; or for reasons resulting from, or to assist a family member (or person who is like family to the employee) who is a victim of, domestic violence, sexual assault, or stalking. Additional information on contractor requirements and worker protections under the EO is available at https://www.dol.gov/agencies/whd/government-contracts.

Note: Executive Order 13658 generally applies to contracts subject to the Davis-Bacon Act that were awarded on or between January 1, 2015 and January 29, 2022, and that have not been renewed or extended on or after January 30, 2022. Executive Order 13658 does not apply to contracts subject only to the Davis-Bacon Related Acts regardless of when they were awarded. If a contract is subject to Executive Order 13658, the contractor must pay all covered workers at least $13.30 per hour (or the applicable wage rate listed on this wage determination, if it is higher) for all hours spent performing on the contract in 2025. The applicable Executive Order minimum wage rate will be adjusted annually. Additional information on contractor requirements and worker protections under Executive Order 13658 is available at www.dol.gov/whd/govcontracts.

Unlisted classifications needed for work not included within the scope of the classifications listed may be added after award only as provided in the labor standards contract clauses (29CFR 5.5 (a) (1) (iii)).

The body of each wage determination lists the classifications and wage rates that have been found to be prevailing for the type(s) of construction and geographic area covered by the wage determination. The classifications are listed in alphabetical order under rate identifiers indicating whether the particular rate is a union rate (current union negotiated rate), a survey rate, a weighted union average rate, a state adopted rate, or a supplemental classification rate.

Union Rate Identifiers

A four-letter identifier beginning with characters other than ""SU"", ""UAVG"", ?SA?, or ?SC? denotes that a union rate was prevailing for that classification in the survey. Example: PLUM0198-005 07/01/2024. PLUM is an identifier of the union whose collectively bargained rate prevailed in the survey for this classification, which in this example would be Plumbers. 0198 indicates the local union number or district council number where applicable, i.e., Plumbers Local 0198. The next number, 005 in the example, is an internal number used in processing the wage determination. The date, 07/01/2024 in the example, is the effective date of the most current negotiated rate.

Union prevailing wage rates are updated to reflect all changes over time that are reported to WHD in the rates in the collective bargaining agreement (CBA) governing the classification.

Union Average Rate Identifiers

The UAVG identifier indicates that no single rate prevailed for those classifications, but that 100% of the data reported for the classifications reflected union rates. EXAMPLE: UAVG-OH-0010 01/01/2024. UAVG indicates that the rate is a weighted union average rate. OH indicates the State of Ohio. The next number, 0010 in the example, is an internal number used in producing the wage determination. The date, 01/01/2024 in the example, indicates the date the wage determination was updated to reflect the most current union average rate.

A UAVG rate will be updated once a year, usually in January, to reflect a weighted average of the current rates in the collective bargaining agreements on which the rate is based.

Survey Rate Identifiers

The ""SU"" identifier indicates that either a single non-union rate prevailed (as defined in 29 CFR 1.2) for this classification in the survey or that the rate was derived by computing a weighted average rate based on all the rates reported in the survey for that classification. As a weighted average rate includes all rates reported in the survey, it may include both union and non-union rates. Example: SUFL2022-007 6/27/2024. SU indicates the rate is a single non-union prevailing rate or a weighted average of survey data for that classification. FL indicates the State of Florida. 2022 is the year of the survey on which these classifications and rates are based. The next number, 007 in the example, is an internal number used in producing the wage determination. The date, 6/27/2024 in the example, indicates the survey completion date for the classifications and rates under that identifier.

?SU? wage rates typically remain in effect until a new survey is conducted. However, the Wage and Hour Division (WHD) has the discretion to update such rates under 29 CFR 1.6(c)(1).

State Adopted Rate Identifiers

The ""SA"" identifier indicates that the classifications and prevailing wage rates set by a state (or local) government were adopted under 29 C.F.R 1.3(g)-(h). Example: SAME2023-007 01/03/2024. SA reflects that the rates are state adopted. ME refers to the State of Maine. 2023 is the year during which the state completed the survey on which the listed classifications and rates are based. The next number, 007 in the example, is an internal number used in producing the wage determination. The date, 01/03/2024 in the example, reflects the date on which the classifications and rates under the ?SA? identifier took effect under state law in the state from which the rates were adopted.

WAGE DETERMINATION APPEALS PROCESS

1) Has there been an initial decision in the matter? This can be:

a) a survey underlying a wage determination
b) an existing published wage determination
c) an initial WHD letter setting forth a position on a wage determination matter

d) an initial conformance (additional classification
and rate) determination

On survey related matters, initial contact, including requests
for summaries of surveys, should be directed to the WHD Branch
of Wage Surveys. Requests can be submitted via email to
davisbaconinfo@dol.gov or by mail to:

Branch of Wage Surveys
Wage and Hour Division
U.S. Department of Labor
200 Constitution Avenue, N.W.
Washington, DC 20210

Regarding any other wage determination matter such as
conformance decisions, requests for initial decisions should be
directed to the WHD Branch of Construction Wage Determinations.
Requests can be submitted via email to BCWD-Office@dol.gov or
by mail to:

Branch of Construction Wage Determinations
Wage and Hour Division
U.S. Department of Labor
200 Constitution Avenue, N.W.
Washington, DC 20210

2) If an initial decision has been issued, then any interested
party (those affected by the action) that disagrees with the
decision can request review and reconsideration from the Wage
and Hour Administrator (See 29 CFR Part 1.8 and 29 CFR Part 7).
Requests for review and reconsideration can be submitted via
email to dba.reconsideration@dol.gov or by mail to:

Wage and Hour Administrator
U.S. Department of Labor
200 Constitution Avenue, N.W.
Washington, DC 20210

The request should be accompanied by a full statement of the
interested party's position and any information (wage payment
data, project description, area practice material, etc.) that
the requestor considers relevant to the issue.

3) If the decision of the Administrator is not favorable, an
interested party may appeal directly to the Administrative
Review Board (formerly the Wage Appeals Board). Write to:

Administrative Review Board
U.S. Department of Labor
200 Constitution Avenue, N.W.
Washington, DC 20210.

==========

END OF GENERAL DECISION
"

STATE OF MISSISSIPPI
MISSISSIPPI DEPARTMENT OF TRANSPORTATION

PLAN AND PROFILE OF PROPOSED STATE HIGHWAY FEDERAL AID PROJECT NO. NHPP-9432-01(002)

SR 76 AT SR 23 - RESTRICTED CROSSING U-TURN
ITAWAMBA COUNTY

GENERAL INDEX

INCLUDED THIS PROJECT		BEGIN WITH SHEET
[X]	ROADWAY	1
[X]	PERMANENT SIGNS	1001
[ ]	TRAFFIC SIGNALS	2001
[ ]	ITS COMPONENTS	3001
[ ]	LIGHTING	4001
[ ]	(RESERVED)	5001
[X]	ROADWAY STD. DWGS	6001
[ ]	BOX CULVERT STD. DWGS (LRFD)	7001
[ ]	BOX CULVERT STD. DWGS (STD. SPEC.)	7501
[ ]	BRIDGE	8001
[X]	CROSS SECTIONS	9001

BRIDGE STRUCTURES REQ'D.

NONE

BOX BRIDGES REQ'D.

NONE

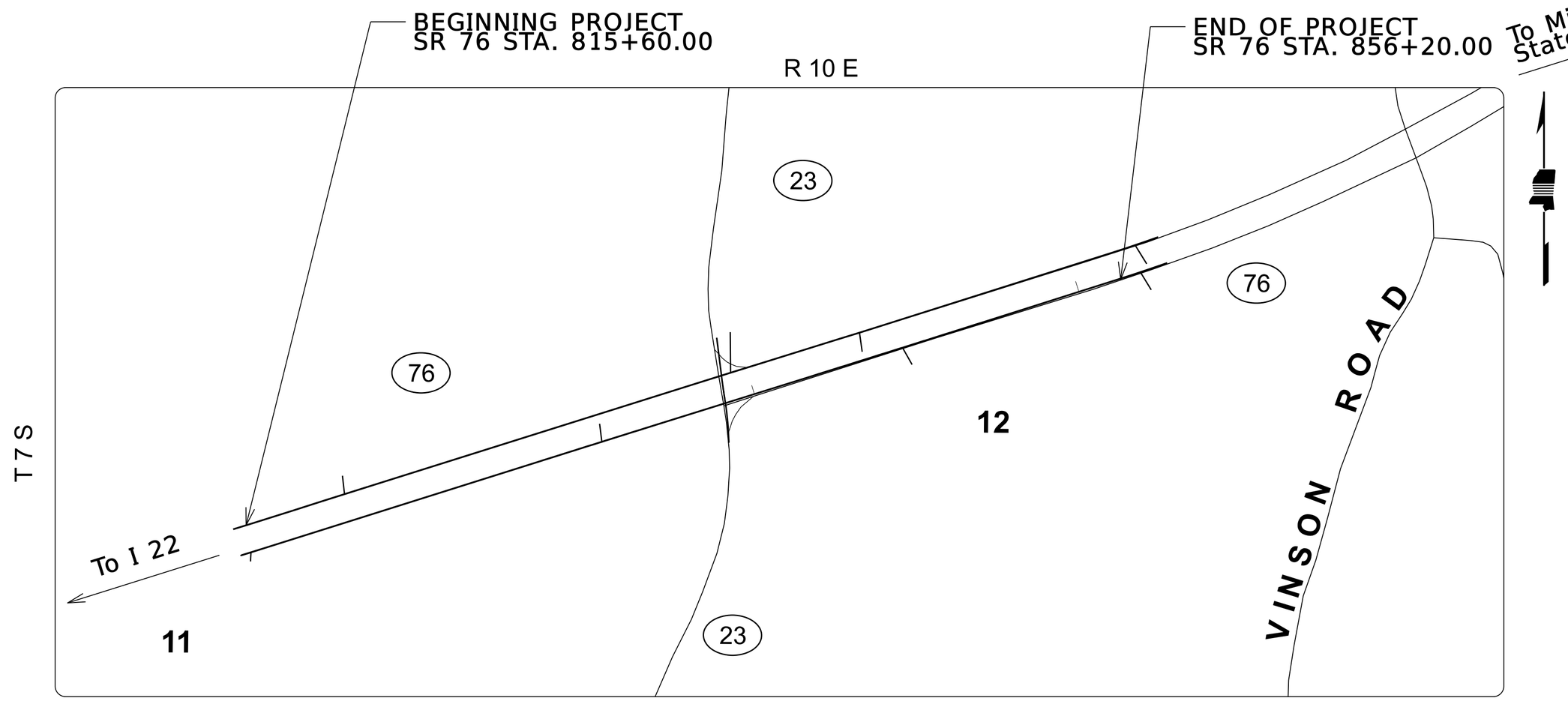

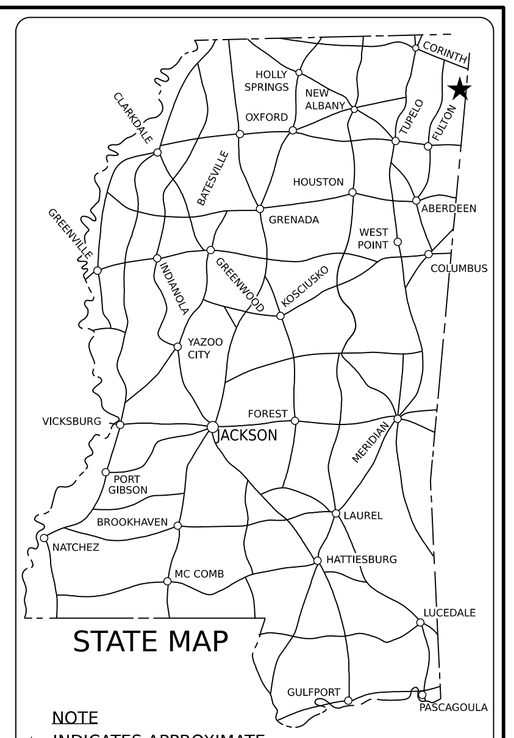

STATE MAP

NOTE
★ INDICATES APPROXIMATE LOCATION OF PROJECT.

LAT. 34° 24' 13.4" W LONG. 88° 11' 55.2" W
(APPROX. MIDDLE OF PROJECT)

DESIGN CONTROL

70 MPH = V (SPEED DESIGN)

ADT (2023) = 2200: ADT (2045) = 3400
DHV = 9% : D = 52 % T = 26 %

PERMITS ACQUIRED BY MDOT

WETLANDS AND WATERS PERMITS

	WATERS	WETLANDS
NATIONWIDE #14	N	N
NATIONWIDE (OTHER)*	N	N
GENERAL*	N	N
INDIVIDUAL (404)*	N	N

STORMWATER PERMIT [S]

Y	REQUIRED, CNOI SUBMITTED BY MDOT (DISTURBED AREA=5 ACRES)
S	REQUIRED, SCNOI TO BE SUBMITTED BY CONTRACTOR (1 TO 4.99 ACRES)
N	NO STORMWATER PERMIT REQUIRED (<1 ACRE)

APPROVED BY: _____

STUART M SAMBERG
LICENSED PROFESSIONAL ENGINEER
30335
STATE OF MISSISSIPPI

CONVENTIONAL SYMBOLS

COUNTY LINE
TOWN CORP LINE
SECTION LINE
DEED LINE
EXISTING ROADWAY
PROPOSED ROADWAY
RAILROAD
BRIDGES

LENGTH DATA

LENGTH OF ROADWAY	4060	FT.	0.769	MI.
LENGTH OF BRIDGES		FT.		MI.
LENGTH OF PROJECT (NET)		FT.		MI.
LENGTH OF EXCEPTIONS		FT.		MI.
LENGTH OF PROJECT (GROSS)	4060	FT.	0.769	MI.

EQUATIONS

NONE

SCALES

PLAN		1 IN.= 50 FT.
PROFILE	HOR.	1 IN.= 50 FT.
	VERT.	1 IN.= 10 FT.
LAYOUT		1 IN.= 400 FT.

EXCEPTIONS

NONE

DESIGNED BY: RK&K

CONSTRUCTION PROJECT DATA

EXTERNAL PROJECT NUMBER	NHPP-9432-01(002)
FMS & DETAIL	109562/301000

P S & E DATE:

APPROVED:

DEPUTY EXECUTIVE DIRECTOR / CHIEF ENGINEER

EXECUTIVE DIRECTOR

ADDENDUM

SUMMARY OF REVISIONS

REV. NO.	DATE	1ST ORDER	ADDENDUM	2ND ORDER	INITIALS	SHEET ID.	DESCRIPTION
1	1/14/2026		X			PM-1, PM-5, PM-6, PM-9, PM-11, PM-12, RS-2, SN-1, SN-3, SN-3A, SN-3B, SN-4, SN-8, SN-8B, TCP-2, TCP-8, TCP-9, TCP-12, TCP-13, TCP-16	REVISED STANDARD DRAWINGS TO MATCH UPDATED VERSIONS APPROVED ON 12-11-2025.

STUART M. SAMBERG
LICENSED PROFESSIONAL ENGINEER
30335
STATE OF MISSISSIPPI

DEPARTMENT OF TRANSPORTATION MISSISSIPPI

MDOT MISSISSIPPI DEPARTMENT OF TRANSPORTATION

DESIGNED BY: RK&K
DETAILED BY: WG
CHECKED BY: AB
DATE: JANUARY 2026

FMS CON:109119 / 301000
PROJECT NO.: NHPP-9432-01(002)
COUNTY: ITAWAMBA

REVISIONS SHEET

WK. NO.
REV-1

SHEET NO.
2

STATE	PROJECT NO.
MISS.	

ADDENDUM

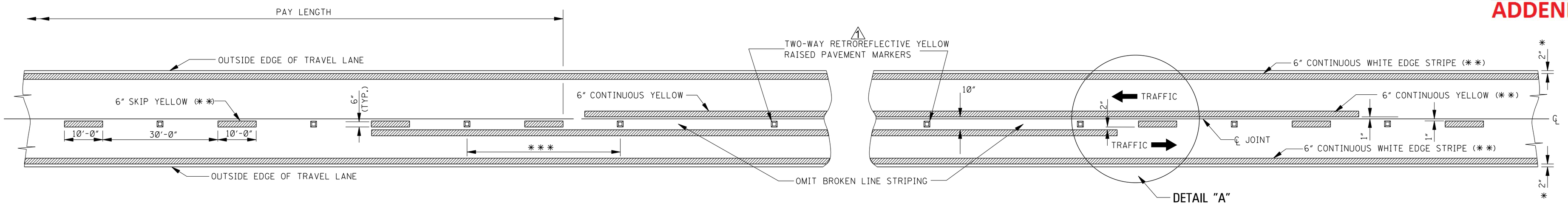

TWO–WAY TRAFFIC
(ASPHALT OR CONCRETE PAVEMENT)

NOTE: THE CRITERIA FOR NO-PASSING ZONES CAN BE FOUND IN THE MDOT ROADWAY DESIGN MANUAL, SECTION 11-1.01.

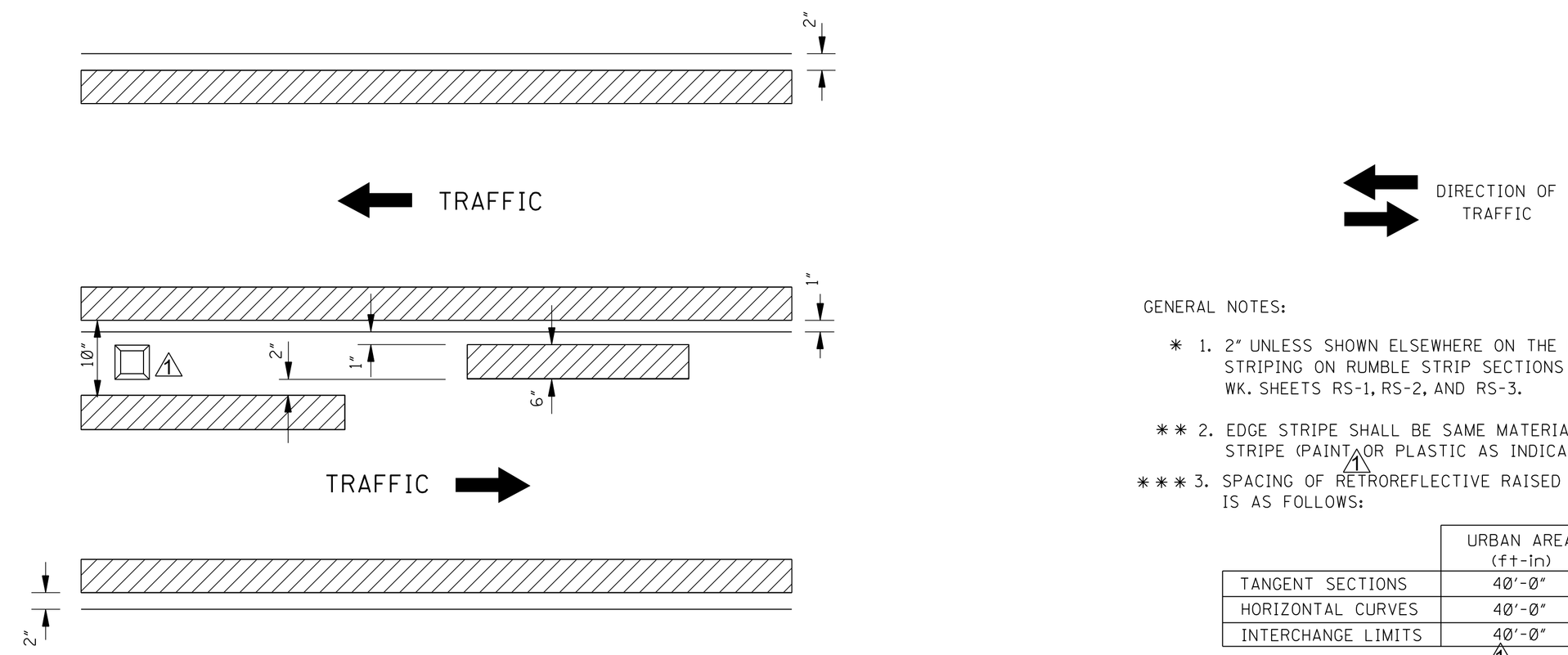

DETAIL "A"

GENERAL NOTES:

* 1. 2" UNLESS SHOWN ELSEWHERE ON THE PLANS. FOR STRIPING ON RUMBLE STRIP SECTIONS REFER TO WK. SHEETS RS-1, RS-2, AND RS-3.

** 2. EDGE STRIPE SHALL BE SAME MATERIAL AS LANE-LINE STRIPE (PAINT OR PLASTIC AS INDICATED IN PAY ITEMS).

*** 3. SPACING OF RETROREFLECTIVE RAISED PAVEMENT MARKERS IS AS FOLLOWS:

	URBAN AREA (ft-in)	RURAL AREA (ft-in)
TANGENT SECTIONS	40'-0"	80'-0"
HORIZONTAL CURVES	40'-0"	40'-0"
INTERCHANGE LIMITS	40'-0"	† 40'-0"

† NOTE: ON THE MAIN FACILITY, RETROREFLECTIVE RED-CLEAR RAISED PAVEMENT MARKERS ON A 40'-0" SPACING WILL BE REQUIRED ON LANE-LINE(S) THROUGH ALL INTERCHANGE AREAS BEGINNING 1000' IN ADVANCE (IN DIRECTION OF TRAFFIC) OF THE EXIT RAMP TAPER AND CONTINUING THROUGH THE INTERCHANGE TO THE END OF THE ENTRANCE RAMP TAPER.

4. PAVEMENT MARKERS SHALL BE HIGH PERFORMANCE RETROREFLECTIVE RAISED PAVEMENT MARKERS AS LISTED IN THE MDOT "APPROVED PRODUCTS LIST."

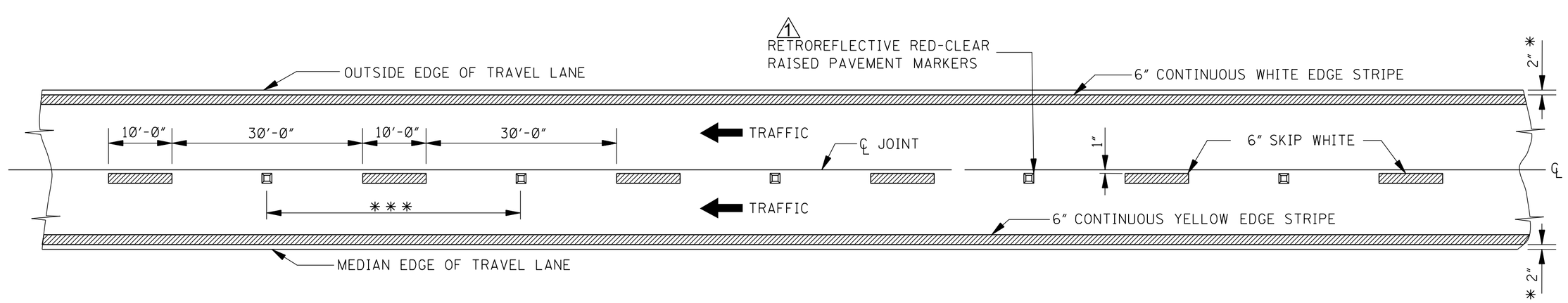

4–LANE WITH ONE–WAY TRAFFIC

DATE	REVISION	BY	STN
12/11/25	REVISE RPMS AND TEXT		

MISSISSIPPI DEPARTMENT OF TRANSPORTATION
ROADWAY DESIGN DIVISION
STANDARD PLAN

PAVEMENT MARKING DETAILS FOR 2–LANE AND 4–LANE DIVIDED ROADWAYS

MDOT MISSISSIPPI DEPARTMENT OF TRANSPORTATION

WORKING NUMBER PM-1

ISSUE DATE: AUGUST 01, 2017

SHEET NUMBER 6051

ADDENDUM

STATE	PROJECT NO.
MISS.	

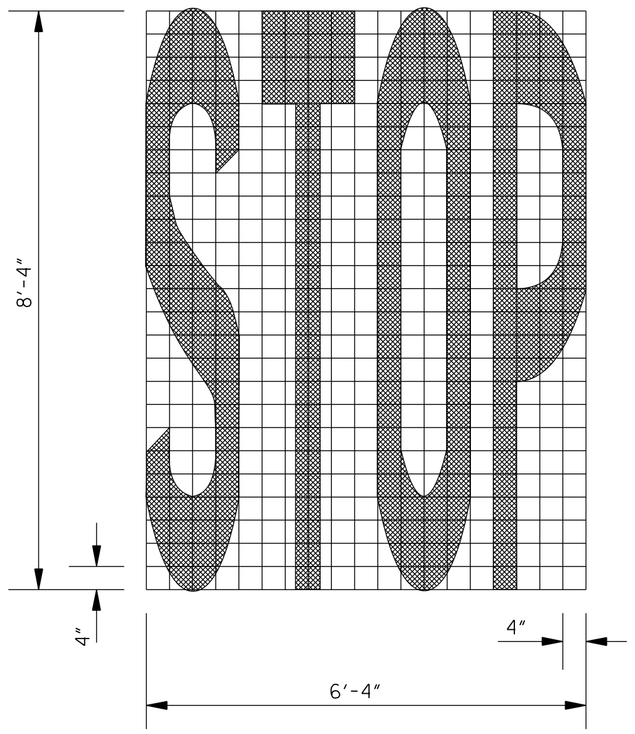

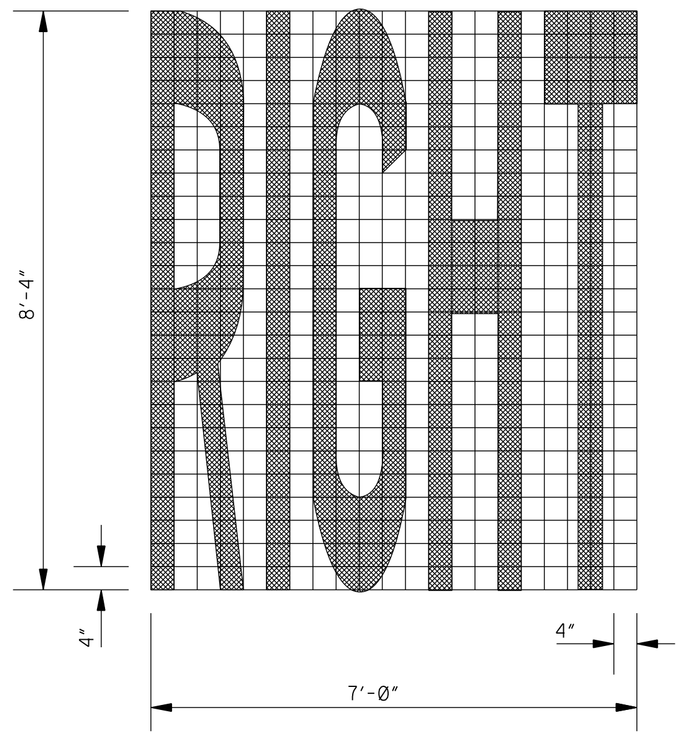

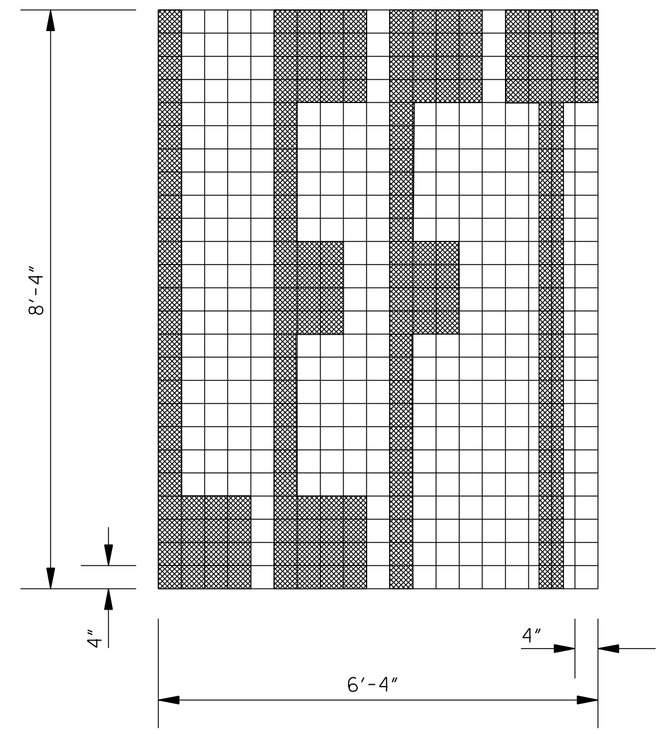

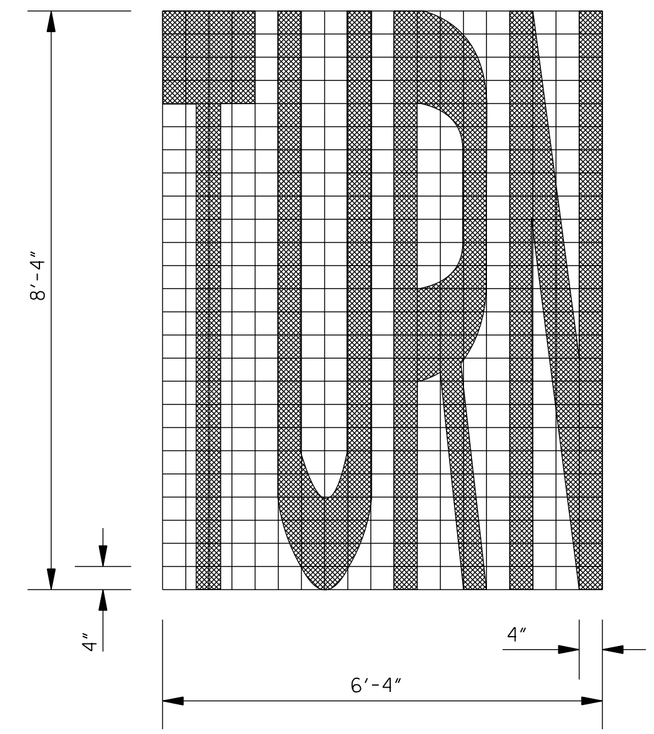

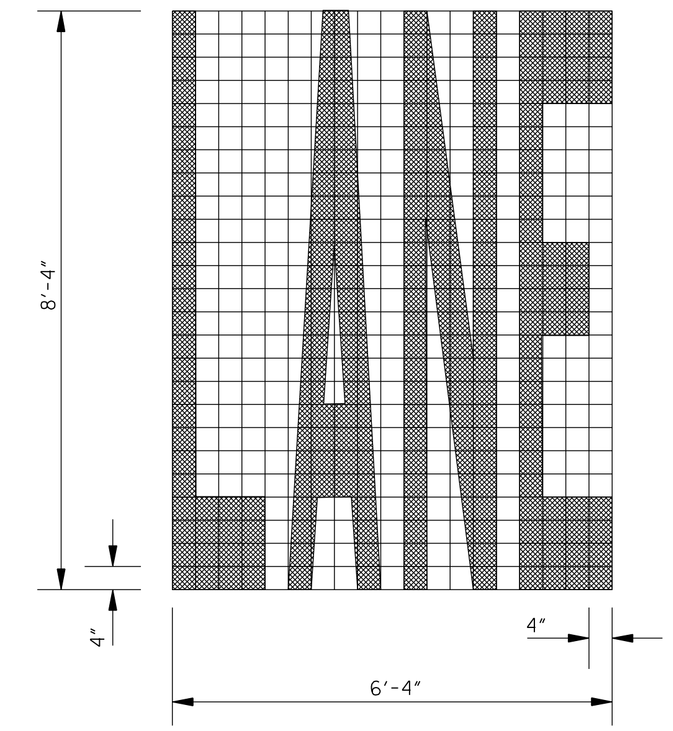

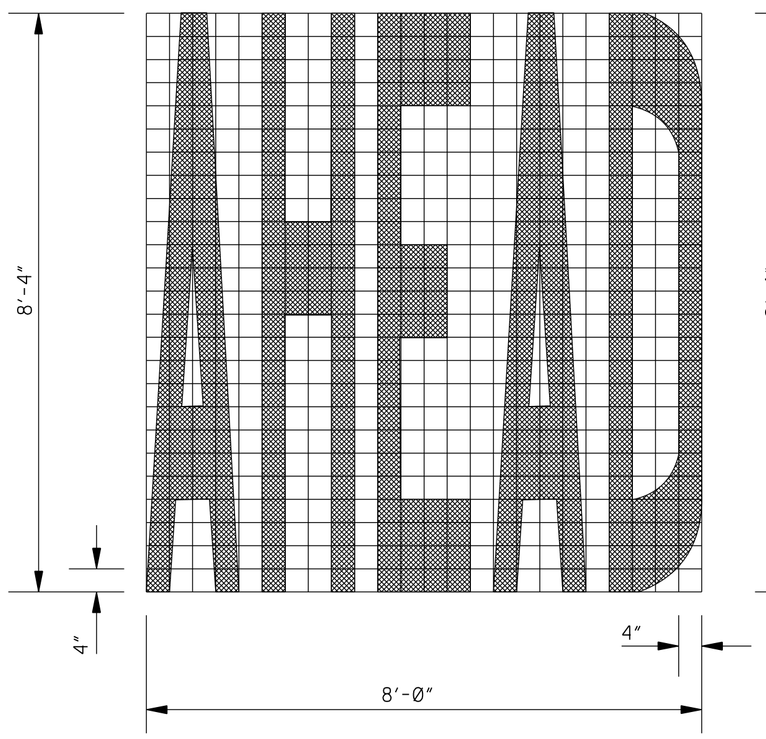

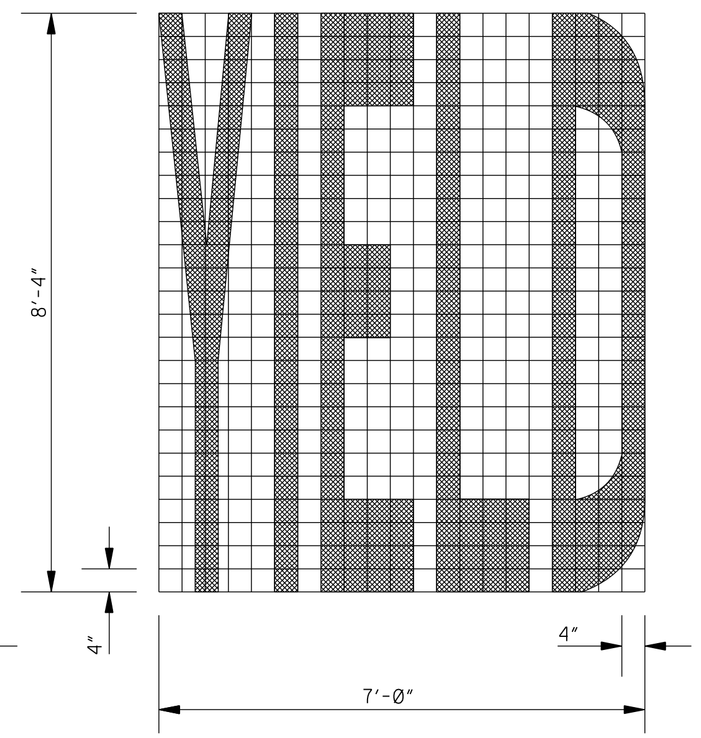

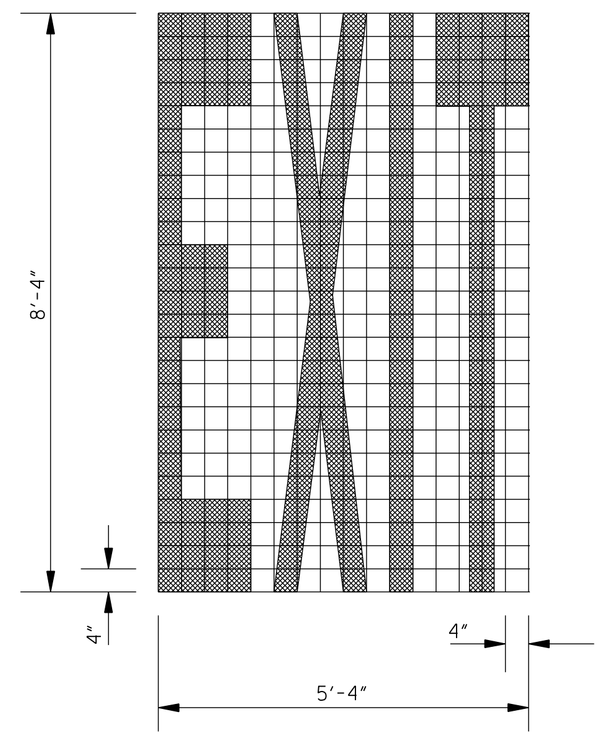

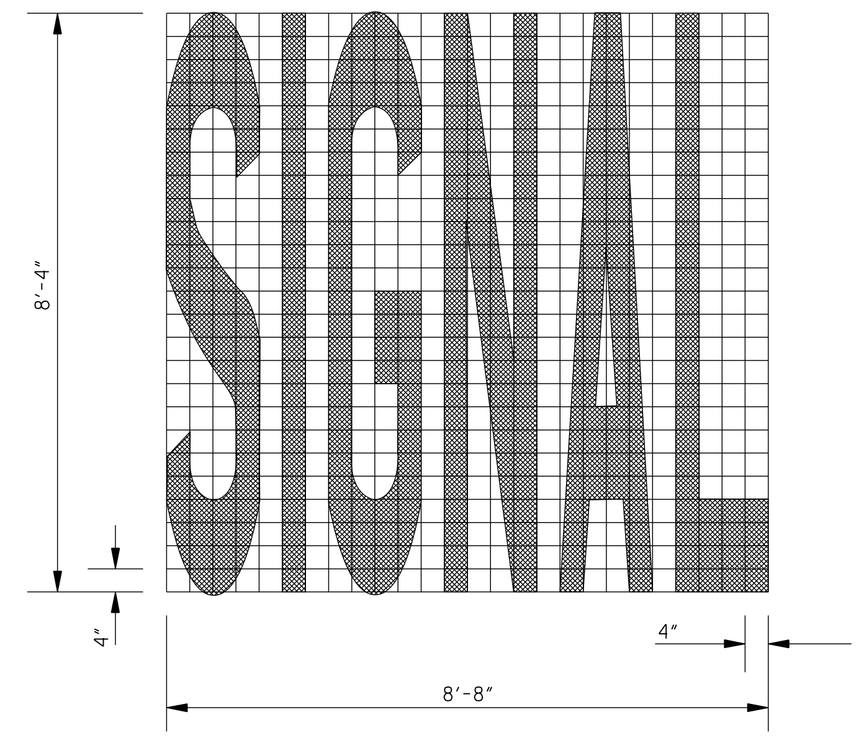

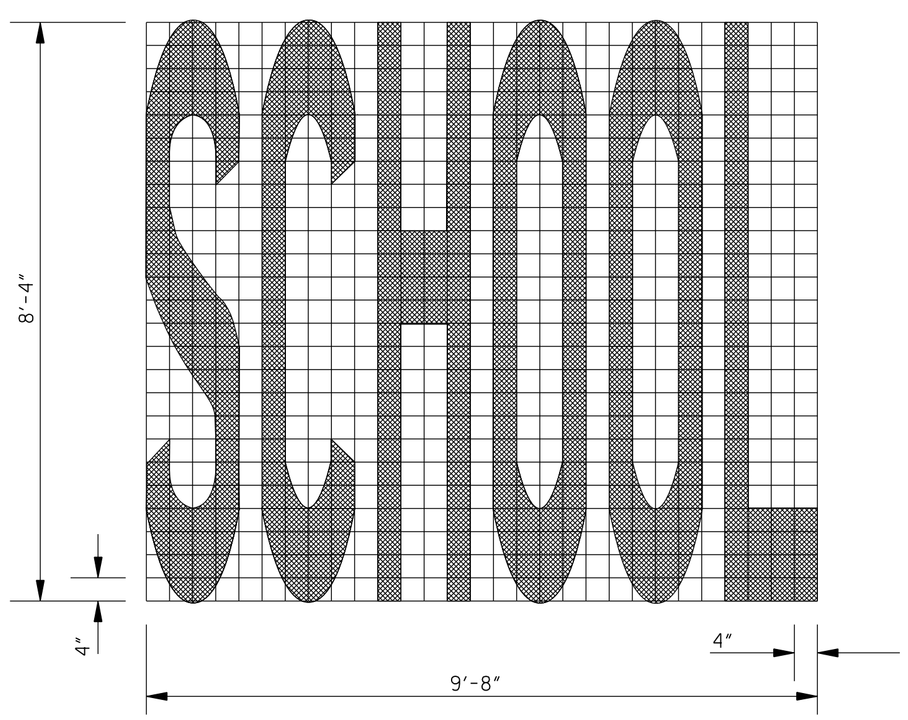

GENERAL NOTES:

1. TWO HORIZONTAL GAPS (CAUSED BY TEMPLATE CONNECTORS) OF 1½" OR LESS AND EXTENDING THE FULL WIDTH ARE PERMITTED IN EACH LETTER.

⚠1 2. PAVEMENT MARKING LETTERS, NUMERALS, SYMBOLS, AND ARROWS SHALL BE INSTALLED IN ACCORDANCE WITH THE DESIGN DETAILS IN THE PAVEMENT MARKINGS CHAPTER OF THE "STANDARD HIGHWAY SIGNS" PUBLICATION AS REFERENCED IN SECTION 1A.05 OF THE LATEST EDITION OF THE MUTCD.

⚠1 3. WORD, SYMBOL, AND ARROW MARKINGS SHALL BE WHITE UNLESS OTHERWISE NOTED IN THE PLANS.

⚠1 4. PAY QUANTITIES FOR PAVEMENT MARKING LEGENDS ARE AS FOLLOWS:

PAY QUANTITIES	
LEGEND	AREA (ft^2)
STOP	24.6
RIGHT	28.6
LEFT	19.5
TURN	27.3
LANE	22.7
AHEAD	32.3
YIELD	26.8
EXIT	18.5
SIGNAL	32.5
SCHOOL	35.5

DATE	REVISION	BY
12/11/25	REVISED GENERAL NOTES	STN

MISSISSIPPI DEPARTMENT OF TRANSPORTATION
ROADWAY DESIGN DIVISION
STANDARD PLAN

PAVEMENT MARKING LEGEND DETAILS

MDOT MISSISSIPPI DEPARTMENT OF TRANSPORTATION

WORKING NUMBER PM-5

SHEET NUMBER 6055

ISSUE DATE: AUGUST 01, 2017

STATE	PROJECT NO.
MISS.	

ADDENDUM

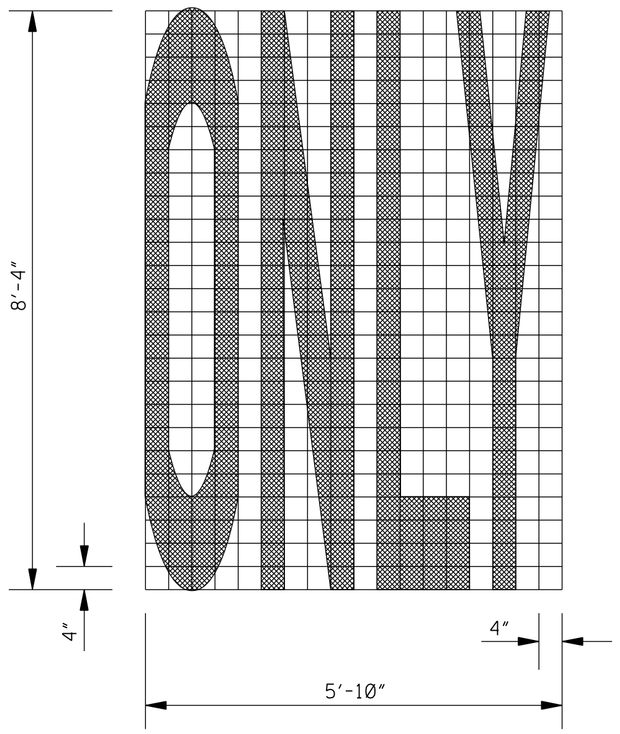

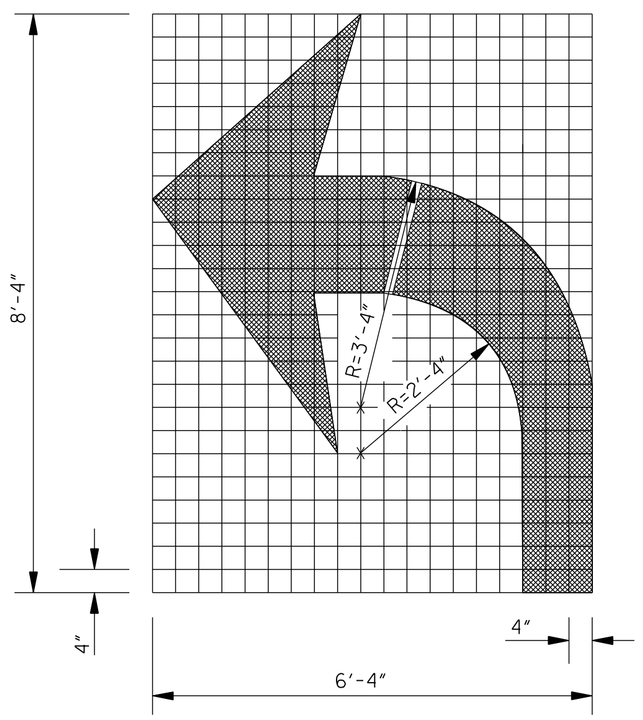

TURN ARROW

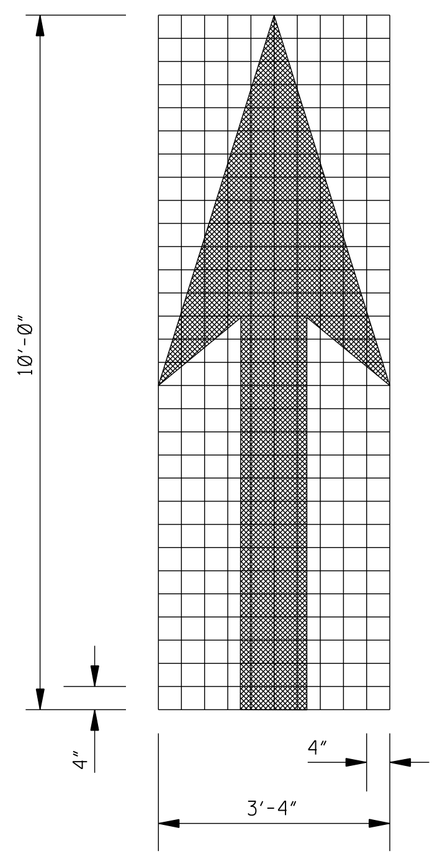

THRU ARROW

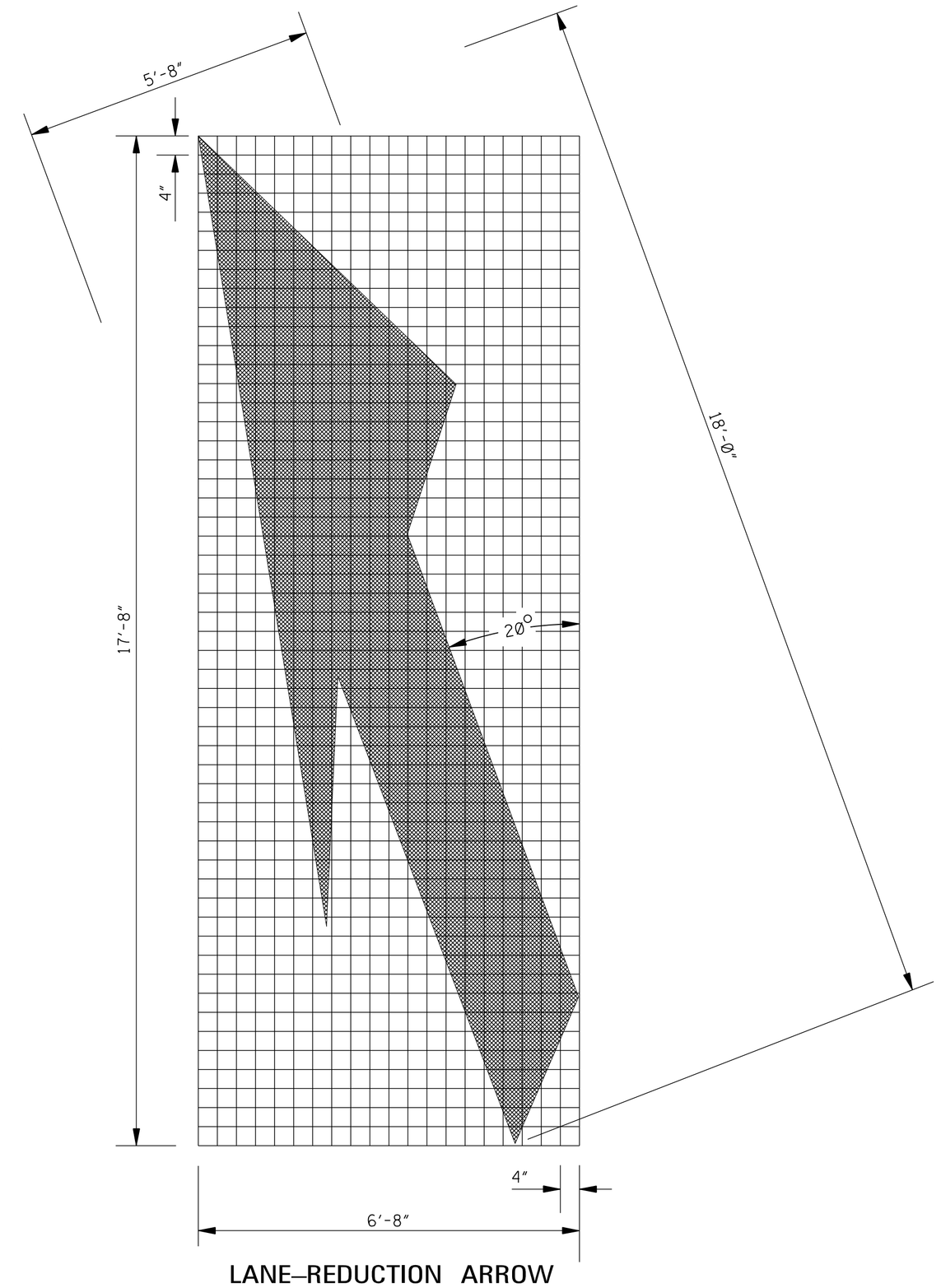

LANE–REDUCTION ARROW

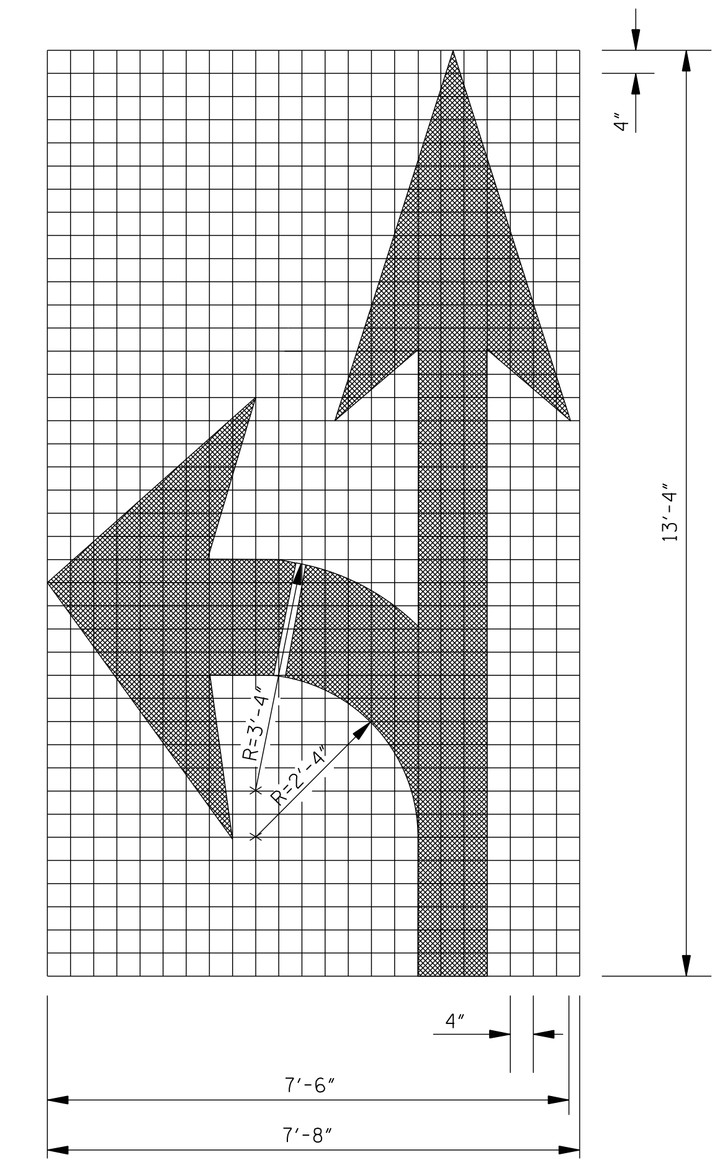

COMBINATION ARROW

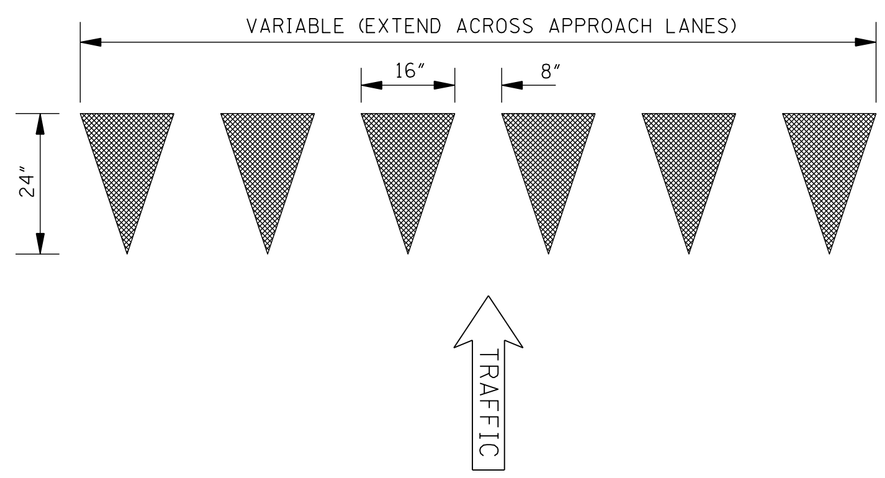

YIELD LINE

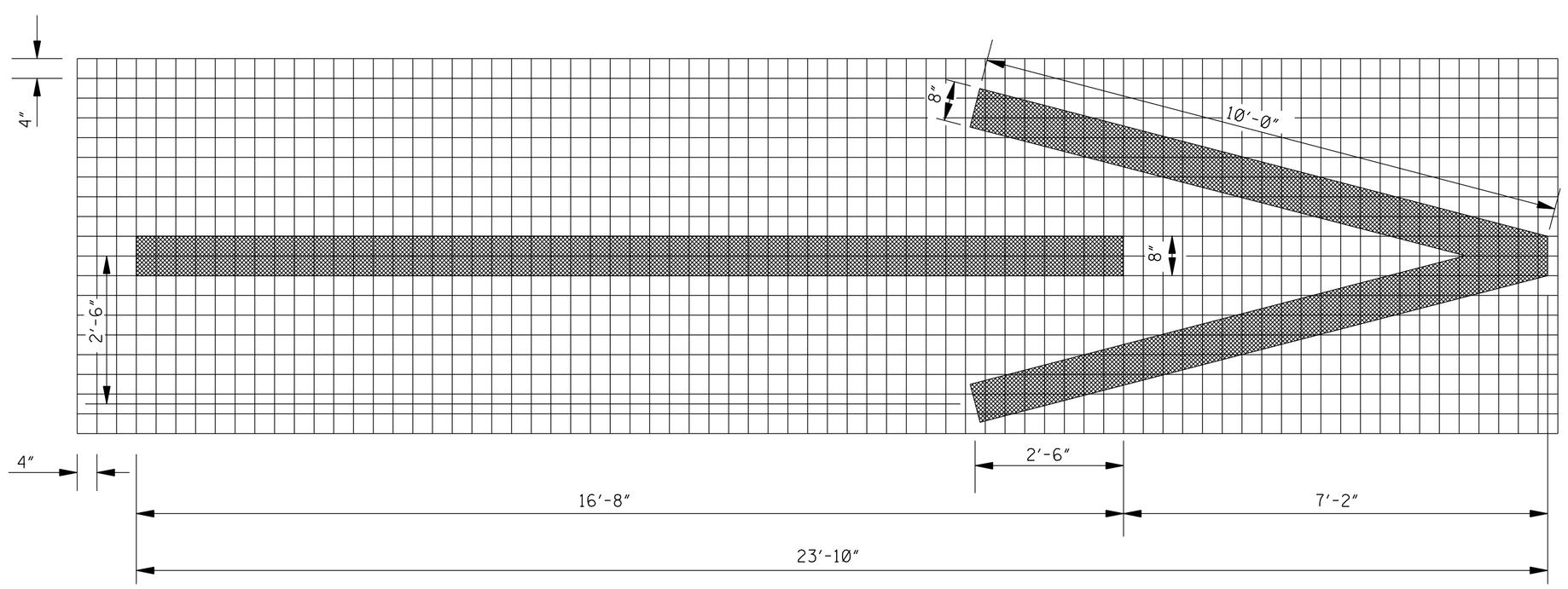

1–WAY ARROW

GENERAL NOTES:

1. TWO HORIZONTAL GAPS (CAUSED BY TEMPLATE CONNECTORS) OF 1½" OR LESS AND EXTENDING THE FULL WIDTH ARE PERMITTED IN EACH LETTER.

△1 2. PAVEMENT MARKING LETTERS, NUMERALS, SYMBOLS, AND ARROWS SHALL BE INSTALLED IN ACCORDANCE WITH THE DESIGN DETAILS IN THE PAVEMENT MARKINGS CHAPTER OF THE "STANDARD HIGHWAY SIGNS" PUBLICATION AS REFERENCED IN SECTION 1A.05 OF THE LATEST EDITION OF THE MUTCD.

△1 3. WORD, SYMBOL, AND ARROW MARKINGS SHALL BE WHITE UNLESS OTHERWISE NOTED IN THE PLANS.

4. PAY QUANTITIES FOR PAVEMENT MARKING LEGENDS ARE AS FOLLOWS:

PAY QUANTITIES	
LEGEND/SYMBOL	AREA (ft^2)
ONLY	22.0
TURN ARROW	16.4
THRU ARROW	12.3
COMB. ARROW	27.5
1-WAY ARROW	24.3
LANE REDUCTION ARROW	40.0

DATE	REVISION	BY
12/11/25	REVISED GENERAL NOTES	STN

MISSISSIPPI DEPARTMENT OF TRANSPORTATION
ROADWAY DESIGN DIVISION
STANDARD PLAN

PAVEMENT MARKING LEGEND DETAILS

MDOT MISSISSIPPI DEPARTMENT OF TRANSPORTATION

WORKING NUMBER PM-6

ISSUE DATE: AUGUST 01, 2017

SHEET NUMBER 6056

STATE	PROJECT NO.
MISS.	

ADDENDUM

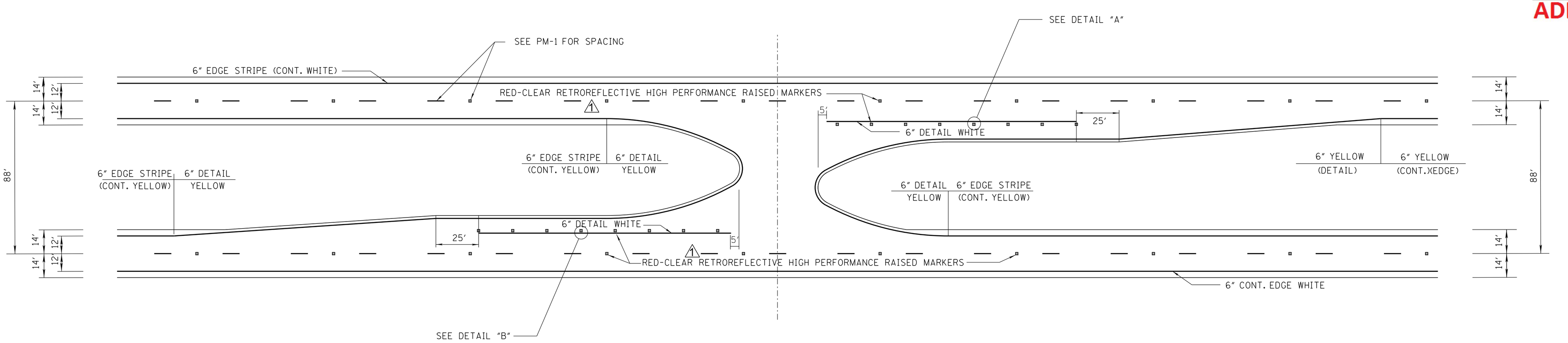

℄ TO ℄ ≤ 88'

NOTE: FOR WIDER ℄ TO ℄ SPACINGS,
REFER TO OTHER SHEETS IN PLANS

NOTE: SEE PM-6 FOR
YIELD BAR DETAILS

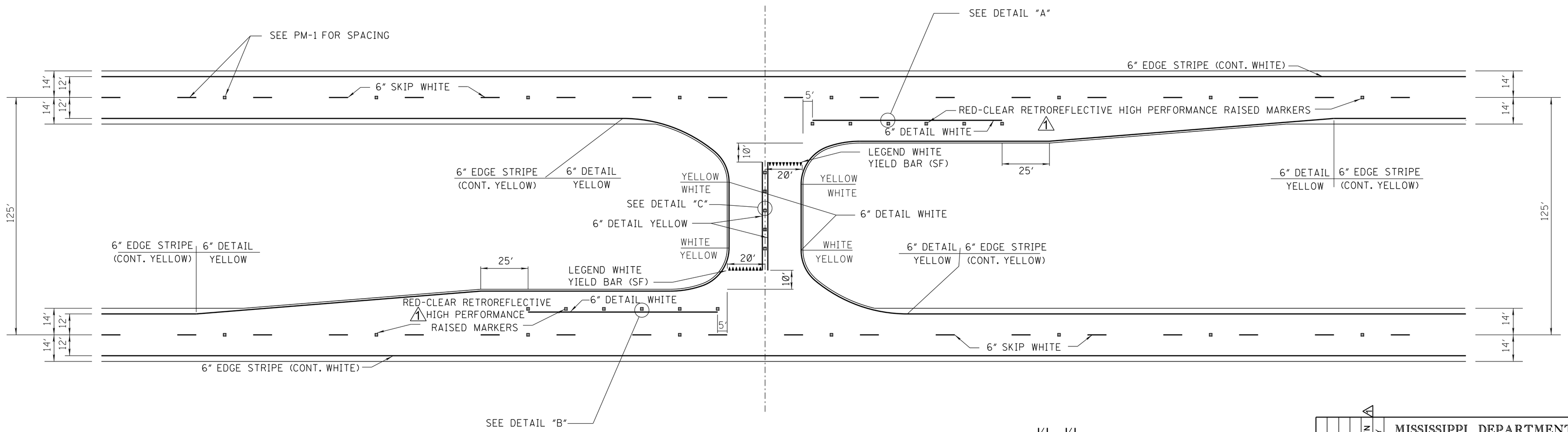

125' ≥ ℄ TO ℄ > 88'

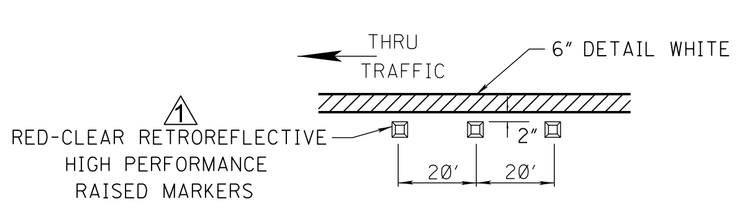

DETAIL "A"

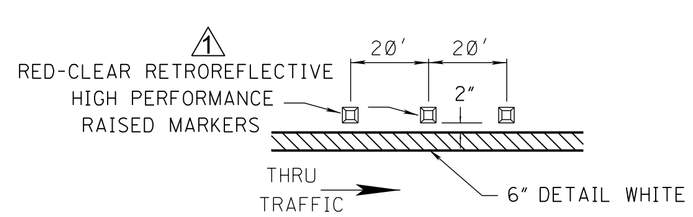

DETAIL "B"

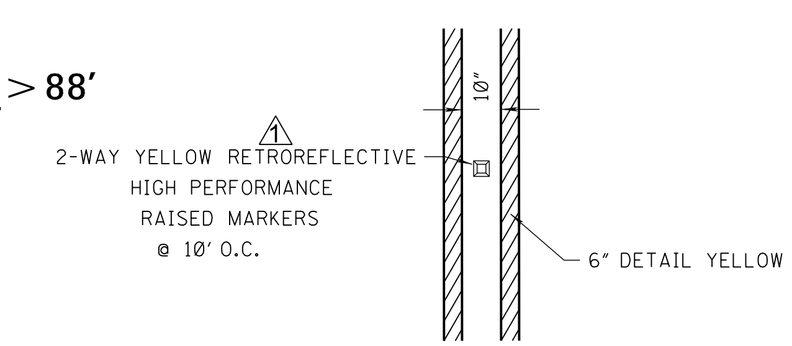

DETAIL "C"

DATE	REVISION	BY
12/11/25	REVISED TEXT AND RPMS	STN

MISSISSIPPI DEPARTMENT OF TRANSPORTATION
ROADWAY DESIGN DIVISION
STANDARD PLAN

TYPICAL PAVEMENT MARKING DETAIL FOR MEDIAN CROSSOVERS

MDOT MISSISSIPPI DEPARTMENT OF TRANSPORTATION

WORKING NUMBER PM-9

ISSUE DATE: AUGUST 01, 2017

SHEET NUMBER 6059

STATE	PROJECT NO.
MISS.	

ADDENDUM

TYPICAL PLACEMENT OF RETROREFLECTIVE RAISED PAVEMENT MARKERS ON SIDE ROAD RADIUS 2–LANE, TWO WAY TRAFFIC

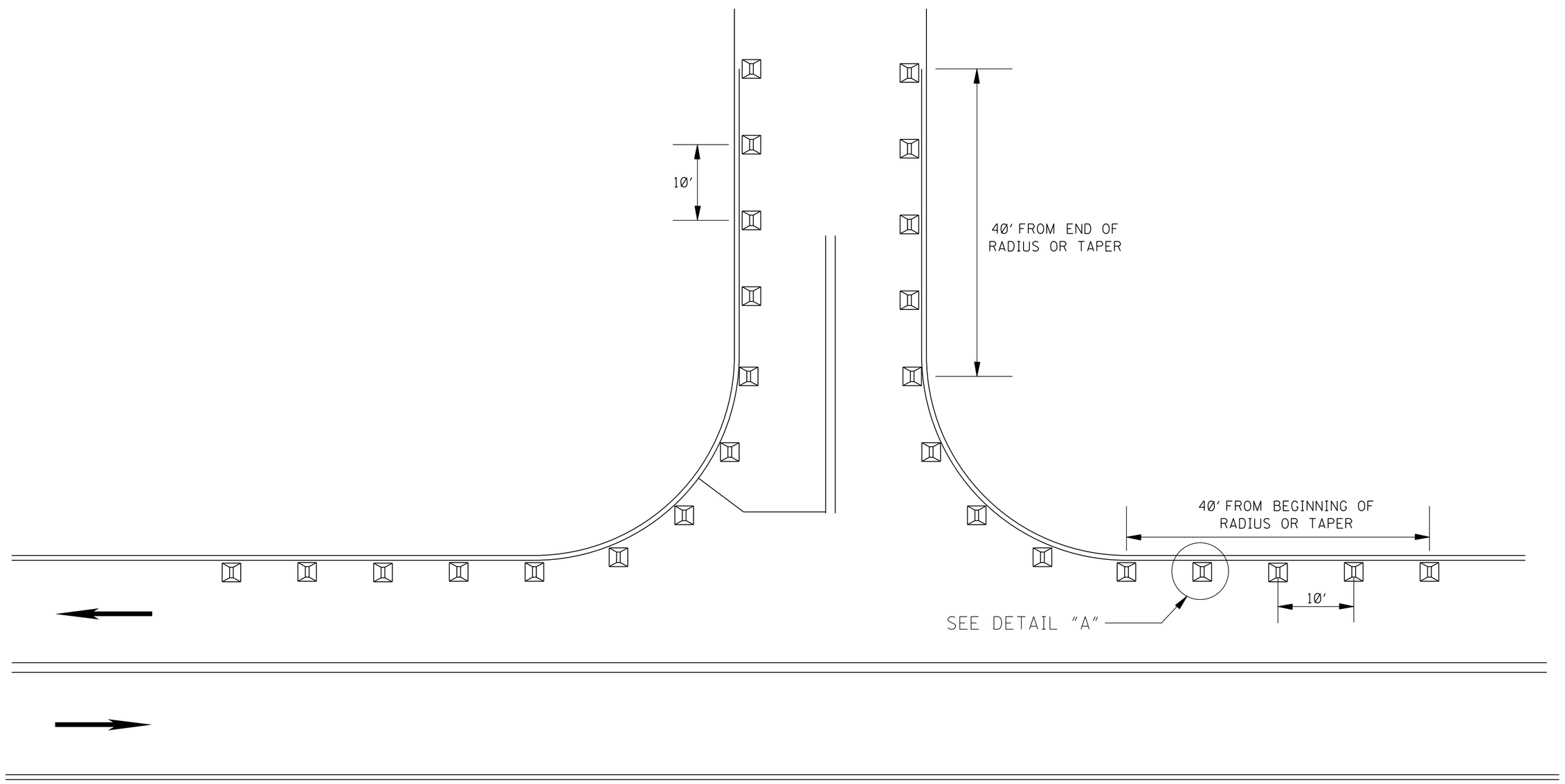

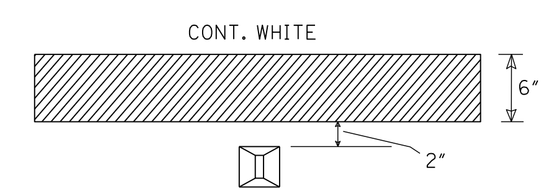

DETAIL A

DIRECTION OF TRAFFIC

GENERAL NOTES:

1. RETROREFLECTIVE FACES OF MARKERS SHALL BE VISIBLE TO THE TRAVELING MOTORIST ON STATE DESIGNATED HIGHWAYS.
2. RETROREFLECTIVE FACES OF MARKERS SHALL BE HIGH PERFORMANCE TWO-WAY CLEAR.
3. RETROREFLECTIVE FACES OF MARKERS SHALL NOT BE ROTATED WHEN BEING PLACED ALONG RADIUS AND TANGENT SECTION OF LOCAL ROAD.
4. MARKERS SHALL BE INSTALLED TO THE LIMITS SHOWN ABOVE.

DATE	REVISION	BY
12/11/25	REVISED TEXT.	STN

MISSISSIPPI DEPARTMENT OF TRANSPORTATION
ROADWAY DESIGN DIVISION
STANDARD PLAN

2–WAY RETROREFLECTIVE RAISED PAVEMENT MARKERS AT INTERSECTING ROADS (2–LANE)

MDOT MISSISSIPPI DEPARTMENT OF TRANSPORTATION

WORKING NUMBER PM-11

ISSUE DATE: AUGUST 01, 2017

SHEET NUMBER 6061

STATE	PROJECT NO.
MISS.	

ADDENDUM

△1 TYPICAL PLACEMENT OF RETROREFLECTIVE RAISED PAVEMENT MARKERS ON SIDE ROAD RADIUS 4–LANE, TWO WAY TRAFFIC

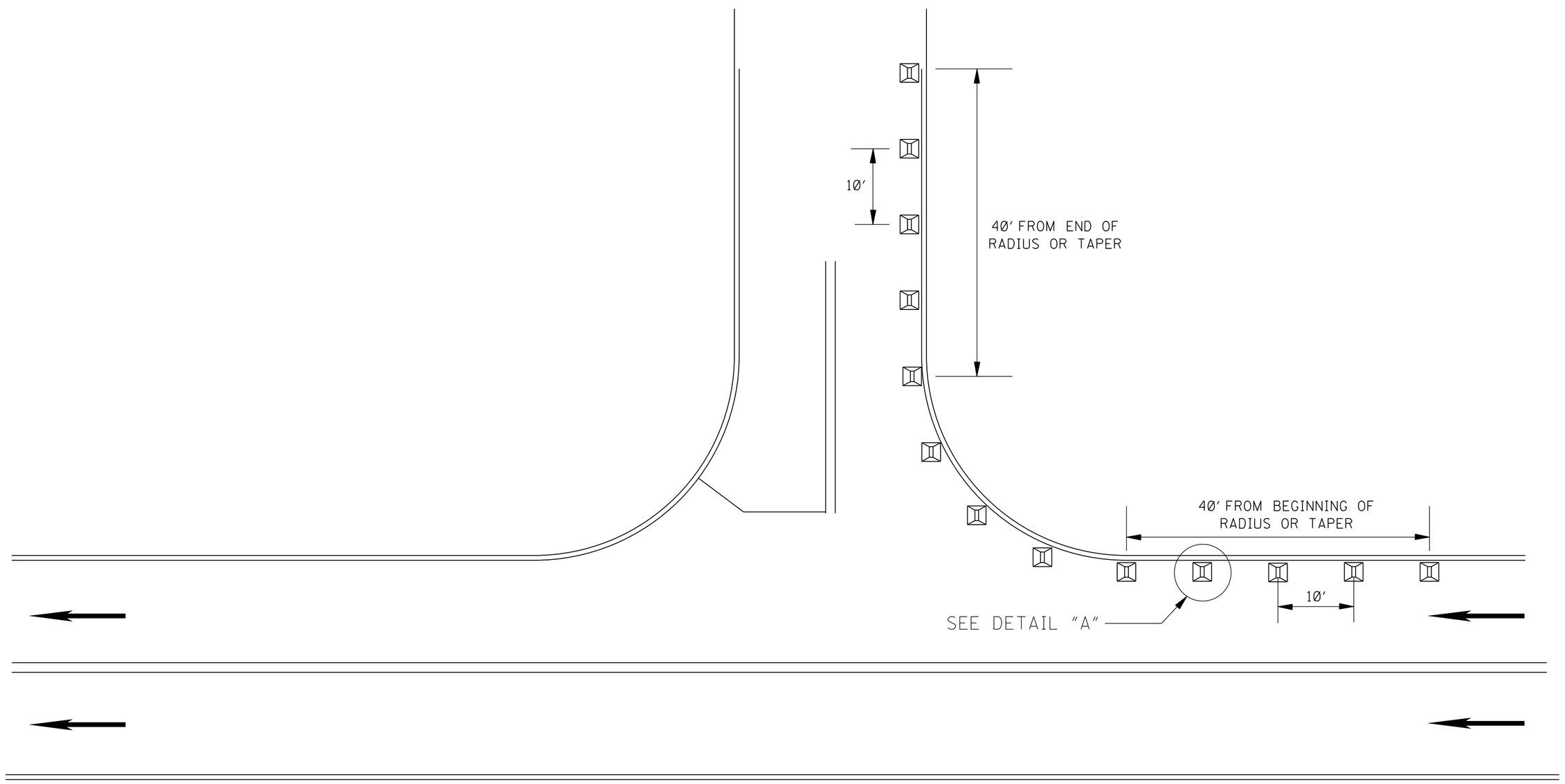

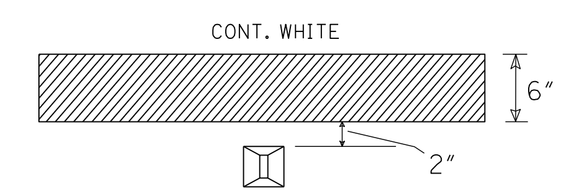

DETAIL A

△1 GENERAL NOTES:

△1 1. RETROREFLECTIVE FACES OF MARKERS SHALL BE VISIBLE TO THE TRAVELING MOTORIST ON STATE DESIGNATED HIGHWAYS.

△1 2. RETROREFLECTIVE FACES OF MARKERS SHALL BE HIGH PERFORMANCE TWO-WAY CLEAR.

→ DIRECTION OF TRAFFIC

DATE	REVISION	BY
12/11/25	REVISED TEXT.	STN

MISSISSIPPI DEPARTMENT OF TRANSPORTATION
ROADWAY DESIGN DIVISION
STANDARD PLAN

△1

2–WAY RETROREFLECTIVE RAISED PAVEMENT MARKERS AT INTERSECTING ROADS (4–LANE)

MDOT MISSISSIPPI DEPARTMENT OF TRANSPORTATION

WORKING NUMBER PM-12

ISSUE DATE: AUGUST 01, 2017

SHEET NUMBER 6062

STATE	PROJECT NO.
MISS.	

ADDENDUM

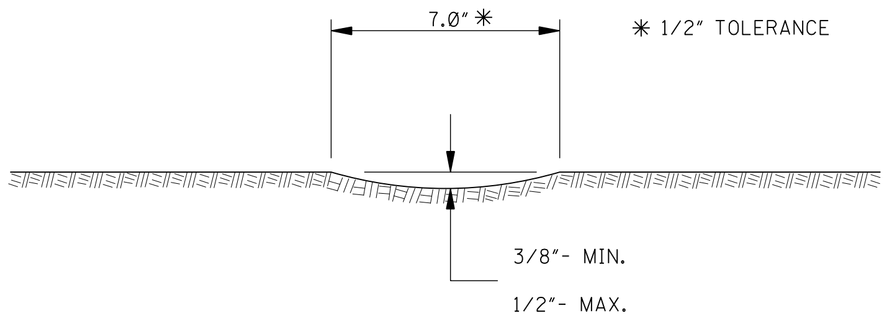

SECTION "A–A"

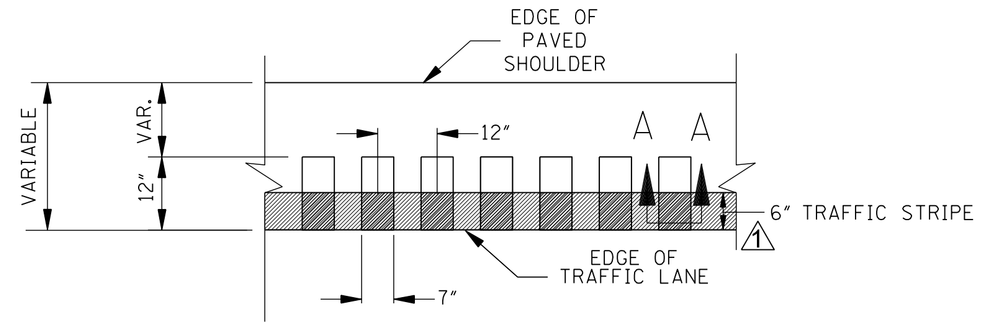

DETAIL "A"

GENERAL NOTES

1. GROUND-IN RUMBLE STRIPES SHALL BE APPLIED ON LEFT AND RIGHT SHOULDERS OF ALL PAVED SHOULDERS ON THIS PROJECT
2. GROUND-IN RUMBLE STRIPES SHALL BE OMITTED ACROSS PUBLIC INTERSECTING ROADWAYS OR OTHER INTERRUPTIONS IN NORMAL SHOULDER WIDTH AS DIRECTED BY THE ENGINEER
3. COST TO BE PAID FOR USING APPROPRIATE PAY ITEMS
4. GROUND-IN RUMBLE STRIPES SHALL BE APPLIED TO:
   - A. MAINLINE
   - B. INTERSECTING ROADWAY IF OVERLAID OR RECONSTRUCTED BEYOND NORMAL MAINLINE R.O.W.
   - C. ANY ROADWAY WITH EXISTING RUMBLE STRIPES PRIOR TO CONSTRUCTION.

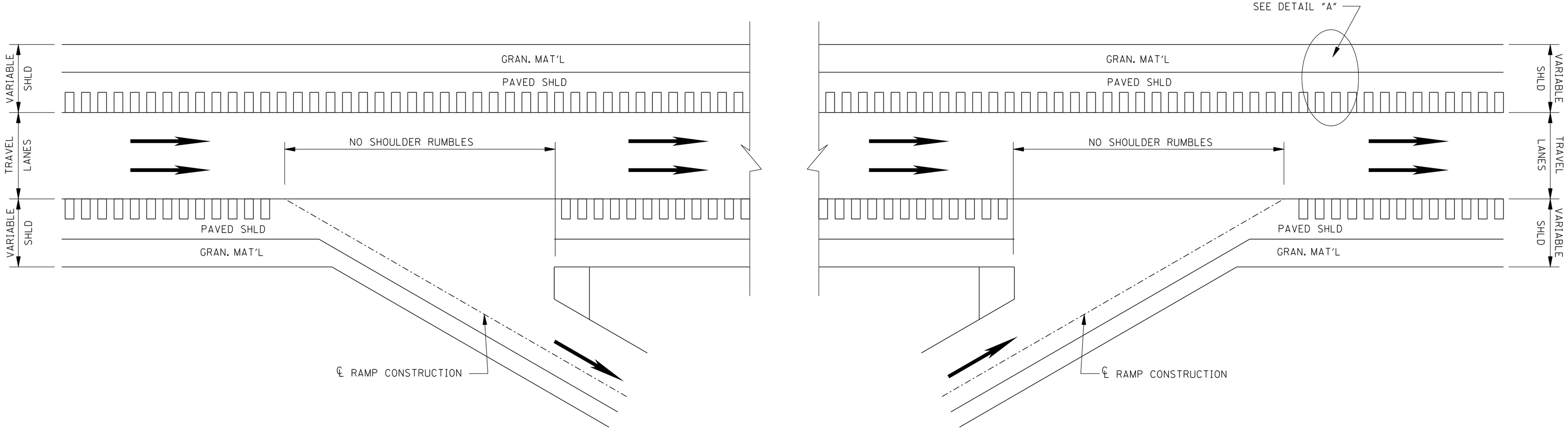

PLAN

NOT TO SCALE

DETAILS OF
RUMBLE STRIPS

DATE	REVISION	BY
12/11/25	REVISED STRIPE DETAIL.	STN

MISSISSIPPI DEPARTMENT OF TRANSPORTATION
ROADWAY DESIGN DIVISION
STANDARD PLAN

RUMBLE STRIPES 4–LANE HIGHWAYS (ASPHALT LANES, 2–FT OR WIDER ASPHALT SHOULDERS)

MDOT MISSISSIPPI DEPARTMENT OF TRANSPORTATION

WORKING NUMBER RS-2

ISSUE DATE: AUGUST 01, 2017

SHEET NUMBER 6065

STATE	PROJECT NO.
MISS.	

ADDENDUM

E5–1

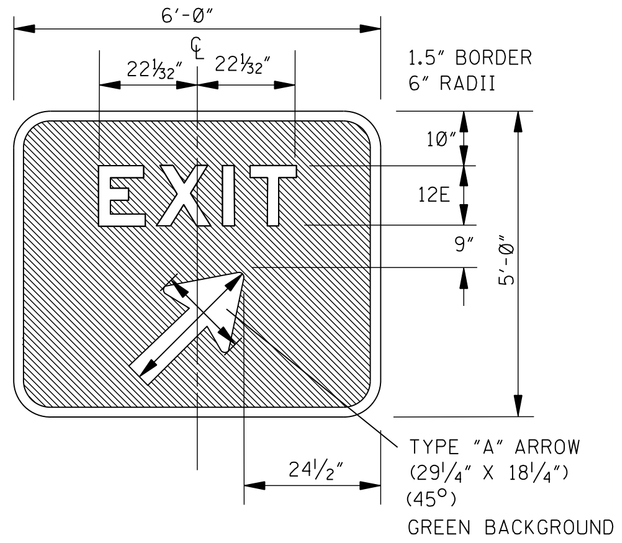

E5–1a

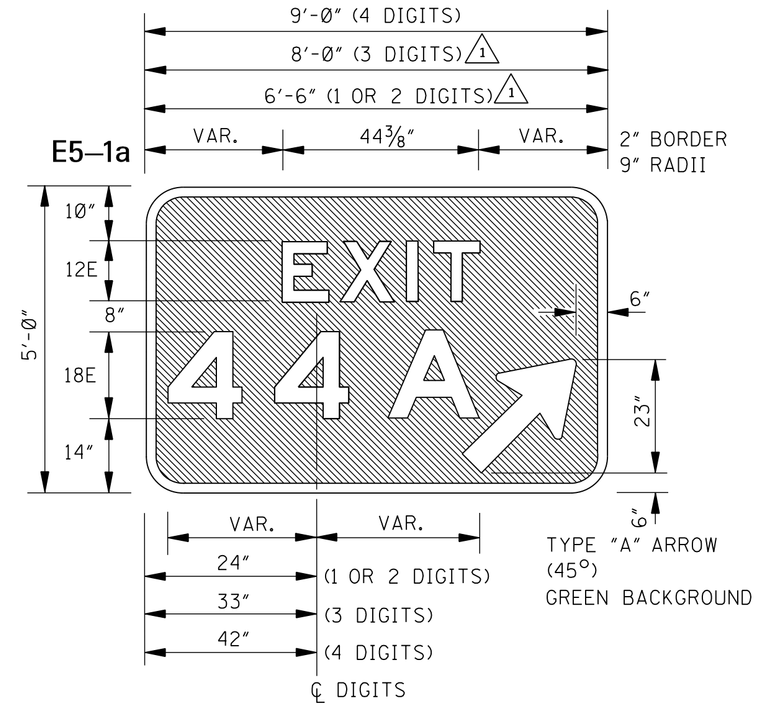

E2–1P

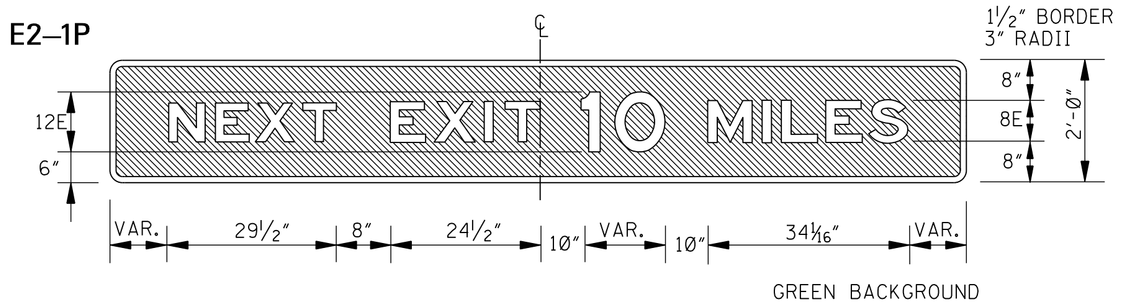

E2–1aP

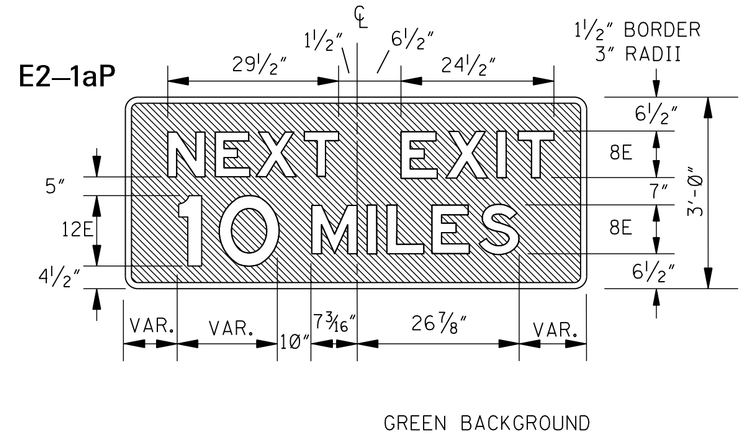

D8–1

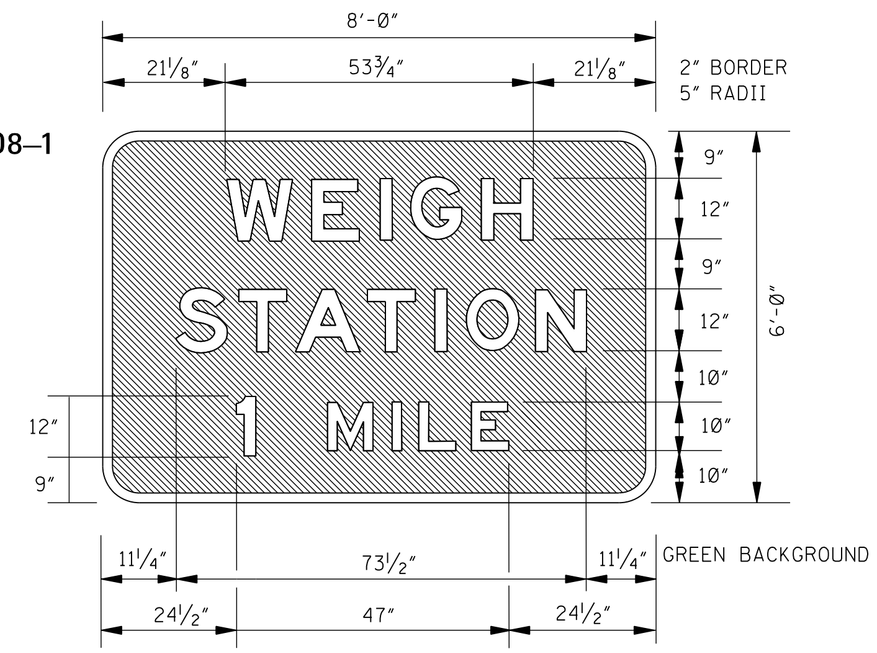

R13–1 1

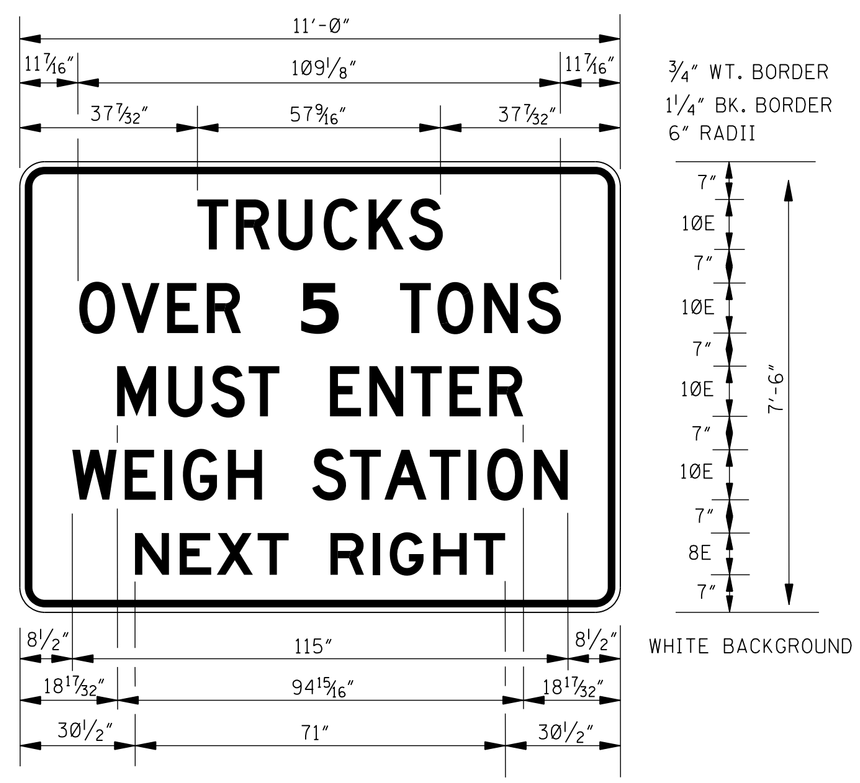

D8–2

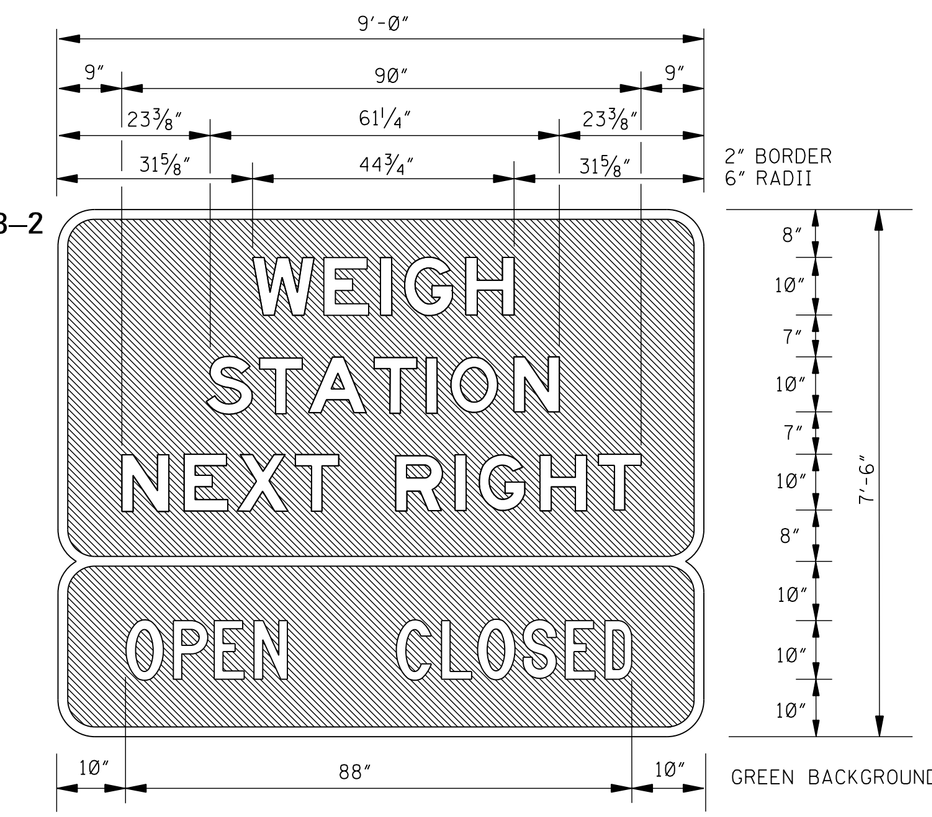

D8–3

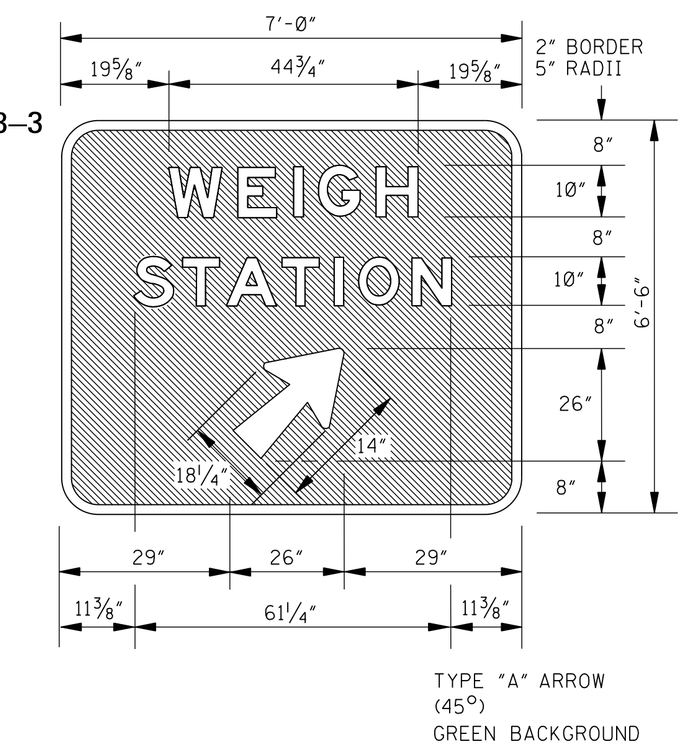

D5–1

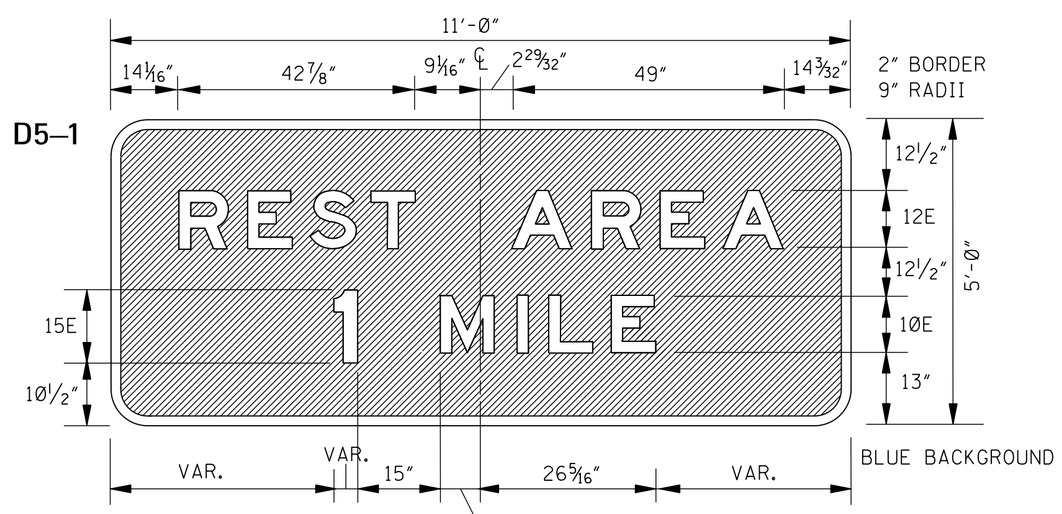

D5–2a

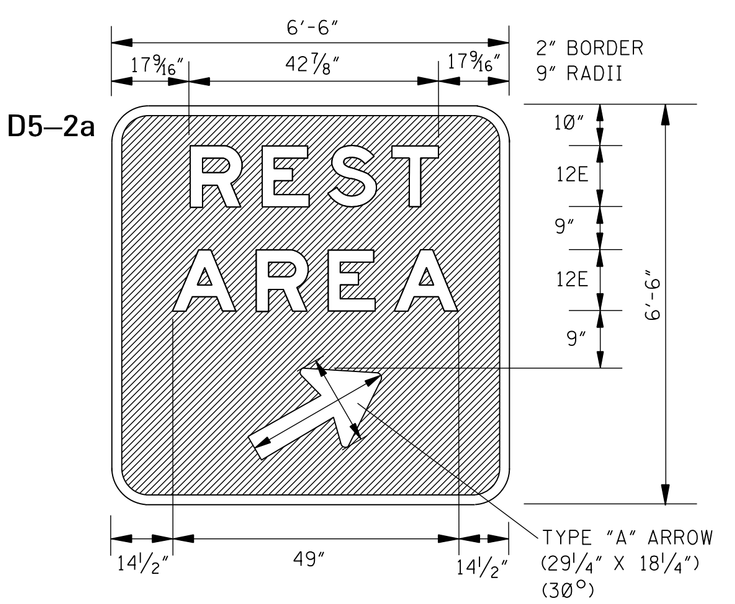

D5–6

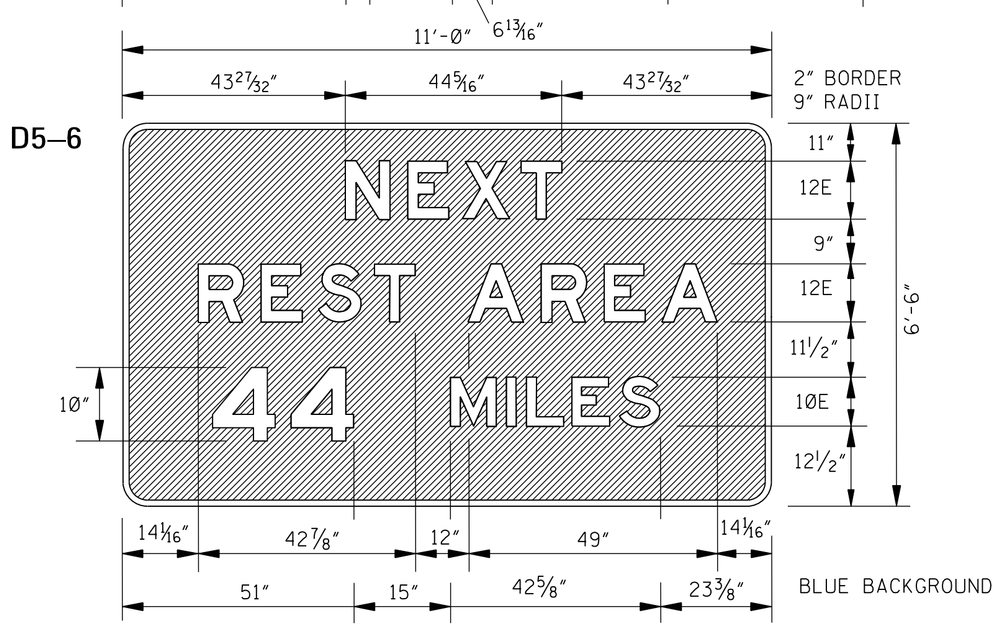

D5–1a

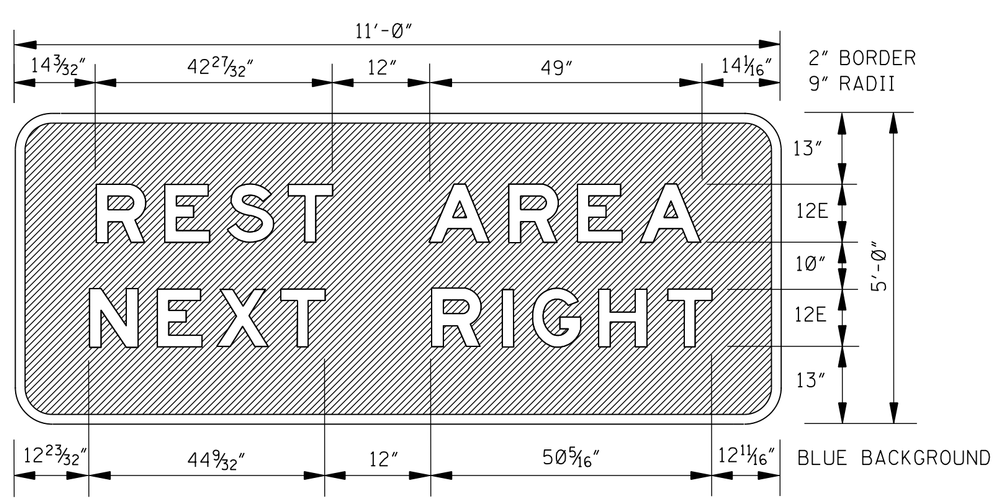

GENERAL NOTE:

1. THE HORIZONTAL SPACING SHOWN ON THESE DRAWINGS IS FOR REMOVABLE COPY TYPE B (SEE SPECIFICATIONS). THIS SPACING MAY VARY SOMEWHAT WHEN REMOVABLE COPY TYPE A IS USED. THE VERTICAL SPACING WILL REMAIN THE SAME REGARDLESS OF WHICH TYPE IS USED. ANY CHANGE IN HORIZONTAL SPACING WILL BE SUBJECT TO APPROVAL BY THE STATE TRAFFIC ENGINEER.

1 2. THE DESIGN OF ALL STANDARD DIRECTIONAL SIGNS SHALL CONFORM TO THE CRITERIA IN THE LATEST VERSION OF THE STANDARD HIGHWAY SIGNS MANUAL IN CONJUNCTION WITH THE LATEST VERSION OF THE MUTCD.

DATE	REVISION	BY
12/11/25	REVISED R13-1 AND GENERAL NOTES.	STN

MISSISSIPPI DEPARTMENT OF TRANSPORTATION
ROADWAY DESIGN DIVISION
STANDARD PLAN

STANDARD DIRECTIONAL (GUIDE) SIGNS

MDOT MISSISSIPPI DEPARTMENT OF TRANSPORTATION

WORKING NUMBER SN-1

ISSUE DATE: AUGUST 01, 2017

SHEET NUMBER 6301

ADDENDUM

STATE	PROJECT NO.
MISS.	

SIGN NUMBER	D9-2		D10-1	D10-2	D10-3	D10-1a	D10-2a	D10-3a	D10-4	D10-5	△1 M1-1A	△1 M1-1A	M1-4		△1 M1-5	
ALUMINUM (6061-T6) SIGN BLANK THICKNESS	0.080"		0.080"	0.080"	0.100"	0.080"	0.100"	0.100"	0.100"	0.100"	0.080"	0.100"	0.080"		0.080"	
LEGEND	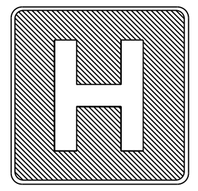 R = 1½" R = 1⅞"		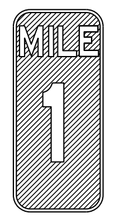 R = 1½"	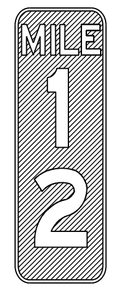 R = 1½"	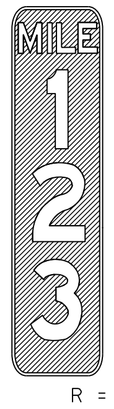 R = 1½"	R = 1½"	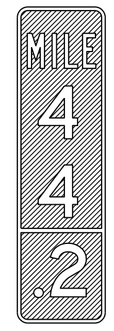 R = 1½"	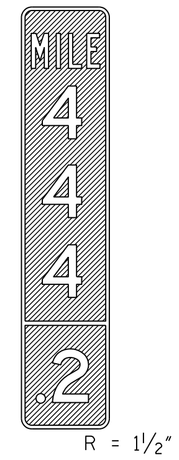 R = 1½"	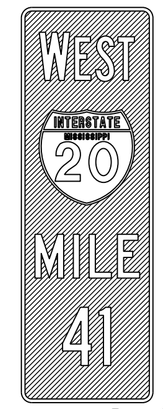 R = 1½"	R = 1½"			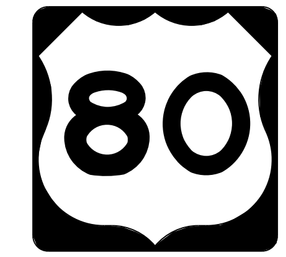 R = 1½"		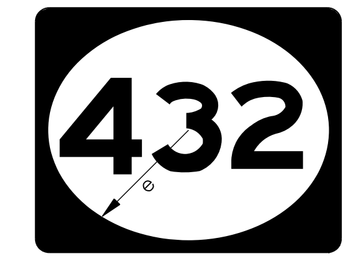 R = 1½" e = 11" (24" X 24") e = VAR. (30" X 24")	
LETTER & NUMERAL SERIES	20" SERIES "E MOD."	30" SERIES "E MOD."	4" SERIES "B" 10" SERIES "D"	4" SERIES "B" 10" SERIES "D"	4" SERIES "B" 10" SERIES "D"	4" SERIES "B" 10" SERIES "D"	4" SERIES "B" 10" SERIES "D"	4" SERIES "B" 10" SERIES "D"	6.6", 6" SERIES "B" 6" SERIES "B" 8"	6.6", 6" SERIES "B" 6" SERIES "B" 8" 8" SERIES "B"	(SEE NOTES 1 & 2 BELOW)		(SEE NOTES 1 & 2 BELOW)		12" SERIES "D" (SEE NOTE BELOW)	
WIDTH OF BORDER INSIDE / OUTSIDE	½" WHITE	¾" WHITE	½" WHITE	½" WHITE	½" WHITE	½" WHITE	½" WHITE	½" WHITE	½" WHITE	½" WHITE	½" WHITE	¾" WHITE	BLACK OUTSIDE BORDER		BLACK OUTSIDE BORDER	
SIZE (WIDTH X HEIGHT)	24" X 24"	△1 30" X 30"	12" X 24"	12" X 36"	12" X 48"	12" X 36"	12" X 48"	12" X 60"	18" X 54"	18" X 60"	24" X 24" (1 OR 2 DIGITS) 30" X 24" (3 DIGITS)	36" X 36" (1 OR 2 DIGITS) 45" X 36" (3 DIGITS)	24" X 24" (1 OR 2 DIGITS) 30" X 24" (3 DIGITS)		24" X 24" (1 OR 2 DIGITS) 30" X 24" (3 DIGITS)	
COLORS COPY / BACKGROUND	WHITE BLUE	WHITE BLUE	WHITE GREEN	WHITE GREEN	WHITE GREEN	WHITE GREEN	WHITE GREEN	WHITE GREEN	WHITE, RED, BLUE GREEN	WHITE, RED, BLUE GREEN	WHITE TOP-RED; BOTTOM-BLUE		BLACK WHITE		BLACK WHITE	
REFLECTORIZATION	ALL	ALL	ALL	ALL	ALL	ALL	ALL	ALL	ALL	ALL	ALL		BACKGROUND		BACKGROUND	
NUMBER OF POSTS FOR MOUNTING	1	1	1	1	1	1	1	1	1	1	1		1		1	
NUMBER OF HOLES TO BE PUNCHED (⅜" DIA.)	2	2	2	2	2	2	2	2	2	2	2	4	2 (VERT. PUNCHING)	2 (HORIZ. PUNCHING)	2 (VERT. PUNCHING)	2 (HORIZ. PUNCHING)
PUNCHING DISTANCE FROM EACH VERTICAL EDGE	12" (VERT. CENTER)	18" (VERT. CENTER)	6" (VERT. CENTER)	6" (VERT. CENTER)	6" (VERT. CENTER)	6" (VERT. CENTER)	6" (VERT. CENTER)	6" (VERT. CENTER)	9" (VERT. CENTER)	9" (VERT. CENTER)	VERT. CENTER	5" FROM VERT. CENTER	VERT. CENTER	12" FROM VERT. CENTER	VERT. CENTER	12" FROM VERT. CENTER
PUNCHING DISTANCE FROM TOP EDGE	3"; 21"	6"; 30"	3"; 21"	3"; 33"	6"; 42"	3"; 33"	6"; 42"	6"; 54"	6"; 48"	6"; 54"	3"; 21"	6";30"	3"; 21"	3"; 21"	3"; 21"	3"; 21"

SIGN NUMBER	△1 M2-1P	△1 M2-1PA (INTER)	△1 *	△1 *	△1 M3-103PA*	△1 M4-5P	△1 M4-5PA (INTER)	△1 M5-1P(L)	△1 M5-1PLA	△1 M5-1PR	△1 M5-1PRA	△1 M5-2PL	△1 M5-2PLA	△1 M5-2PR	△1 M5-2PRA	△1 M6-1PL	△1 M6-1PLA	△1 M6-1PR	△1 M6-1PRA	△1 M6-2PL	△1 M6-2PLA	△1 M6-2PR	△1 M6-2PRA	△1 M6-3P	△1 M6-3PA
ALUMINUM (6061-T6) SIGN BLANK THICKNESS	0.080"		0.080"		0.080"	0.080"		0.080"		0.080"		0.080"		0.080"		0.080"		0.080"		0.080"		0.080"		0.080"	
LEGEND	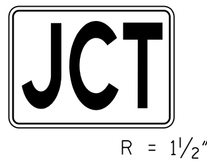 R = 1½"		R = 1½"		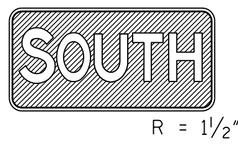 R = 1½"	R = 1½"		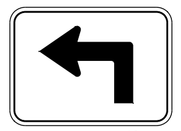 R = 1½"		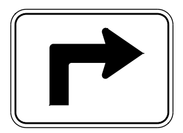 R = 1½"		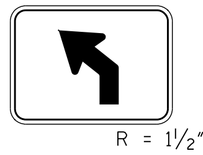 R = 1½"		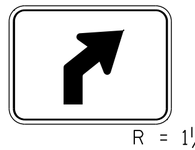 R = 1½"		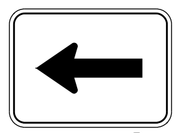 R = 1½"		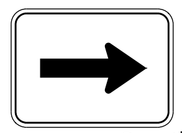 R = 1½"		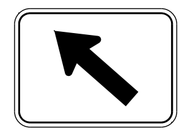 R = 1½"		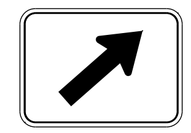 R = 1½"		R = 1½"	
LETTER & NUMERAL SERIES	9" SERIES "C"		7" SERIES "C" 6" SERIES "C"		10" SERIES "C" 8" SERIES "C"	6" SERIES "E"																			
WIDTH OF BORDER INSIDE / OUTSIDE	⅝" BLACK ⅜" WHITE	½" WHITE	⅝" BLACK ⅜" WHITE	½" WHITE	½" WHITE	⅝" BLACK ⅜" WHITE	½" WHITE	⅝" BLACK ⅜" WHITE	½" WHITE	⅝" BLACK ⅜" WHITE	½" WHITE	⅝" BLACK ⅜" WHITE	½" WHITE	⅝" BLACK ⅜" WHITE	½" WHITE	⅝" BLACK ⅜" WHITE	½" WHITE	⅝" BLACK ⅜" WHITE	½" WHITE	⅝" BLACK ⅜" WHITE	½" WHITE	⅝" BLACK ⅜" WHITE	½" WHITE	⅝" BLACK ⅜" WHITE	½" WHITE
SIZE (WIDTH X HEIGHT)	21" X 15"		24" X 12"		△1 36" X 18"	24" X 12"		21" X 15"		21" X 15"		21" X 15"		21" X 15"		21" X 15"		21" X 15"		21" X 15"		21" X 15"		21" X 15"	
COLORS COPY / BACKGROUND	BLACK WHITE	WHITE BLUE	BLACK WHITE	WHITE BLUE	WHITE BLUE	BLACK WHITE	WHITE BLUE	BLACK WHITE	WHITE BLUE	BLACK WHITE	WHITE BLUE	BLACK WHITE	WHITE BLUE	BLACK WHITE	WHITE BLUE	BLACK WHITE	WHITE BLUE	BLACK WHITE	WHITE BLUE	BLACK WHITE	WHITE BLUE	BLACK WHITE	WHITE BLUE	BLACK WHITE	WHITE BLUE
REFLECTORIZATION	B'GROUND	ALL	B'GROUND	ALL	ALL	B'GROUND	ALL	B'GROUND	ALL	B'GROUND	ALL	B'GROUND	ALL	B'GROUND	ALL	B'GROUND	ALL	B'GROUND	ALL	B'GROUND	ALL	B'GROUND	ALL	B'GROUND	ALL
NUMBER OF POSTS FOR MOUNTING	1		1		1	1		1		1		1		1		1		1		1		1		1	
NUMBER OF HOLES TO BE PUNCHED (⅜" DIA.)	2		2		2	2		2		2		2		2		2		2		2		2		2	
PUNCHING DISTANCE FROM EACH VERTICAL EDGE	VERT. CENTER		12" (V. PUNCH) 7" (H.PUNCH)	12"	VERT. CENTER	12" (VERT. CENTER)		VERT. CENTER		VERT. CENTER		VERT. CENTER		VERT. CENTER		VERT. CENTER		VERT. CENTER		VERT. CENTER		VERT. CENTER		VERT. CENTER	
PUNCHING DISTANCE FROM TOP EDGE	1½"; 13½"		1½"; 10½" (V.) 6" (H.)	1½"; 10½"	1½"; 13½"	1½"; 10½"		1½"; 13½"		1½"; 13½"		1½"; 13½"		1½"; 13½"		1½"; 13½"		1½"; 13½"		1½"; 13½"		1½"; 13½"		1½"; 13½"	

GENERAL NOTES:

△1 1. THE DIMENSIONS FOR ALL STANDARD ROADSIDE SIGNS SHALL CONFORM WITH THOSE SHOWN IN THE STANDARD HIGHWAY SIGNS IN CONJUNCTION WITH THE MANUAL ON UNIFORM TRAFFIC CONTROL DEVICES, LASTEST EDITIONS.

2. ROUTE MARKERS AND SHIELDS SHOWN ON THIS SHEET ARE FOR USE INDEPENDENTLY OF INTERSTATE DIRECTIONAL (GUIDE) SIGNS. SEE OTHER DRAWINGS FOR SHIELDS TO BE USED ON INTERSTATE DIRECTIONAL (GUIDE) SIGNS.

3. THE QUANTITIES LISTED ON THE SUMMARY OF QUANTITIES SHEET FOR THE SIGNS SHOWN ON THIS SHEET WILL BE USED AS THE BASIS FOR FINAL PAYMENT, EXCEPT WHERE SIGNS ARE MODIFIED FROM THAT SHOWN.

△1 4. M1-5: IN SOME CASES NUMERALS CANNOT BE ACCOMMODATED WITHIN THE SPACE AVAILABLE. FOR THESE SITUATIONS, THE STANDARD SERIES "D" NUMERAL SHALL BE REDUCED TO SERIES "C".

*

NORTH	EAST	SOUTH	WEST
M3-1	M3-2	M3-3	M3-4
M3-1A	M3-2A	M3-3A	M3-4A
M3-101A	M3-102A	M3-103A	M3-104A

DATE	REVISION	BY
12/11/25	REVISED TEXT.	STN

MISSISSIPPI DEPARTMENT OF TRANSPORTATION
ROADWAY DESIGN DIVISION
STANDARD PLAN

STANDARD ROADSIDE SIGNS

MDOT MISSISSIPPI DEPARTMENT OF TRANSPORTATION

WORKING NUMBER SN-3

ISSUE DATE: AUGUST 01, 2017

SHEET NUMBER 6303

ADDENDUM

STATE	PROJECT NO.
MISS.	

SIGN NUMBER	R1-1		R1-2			R2-1			R2-4a	R3-1		R3-2		R3-4		R3-5	R4-3	
ALUMINUM (6061-T6) SIGN BLANK THICKNESS	0.100″	0.125″	0.080″	0.100″	0.125″	0.080″	0.100″	0.125″	0.125″	0.080″	0.100″	0.080″	0.100″	0.080″	0.100″	0.080″	0.100″	0.125″
LEGEND	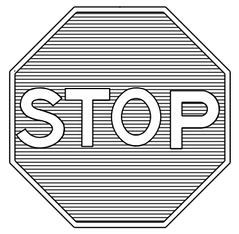		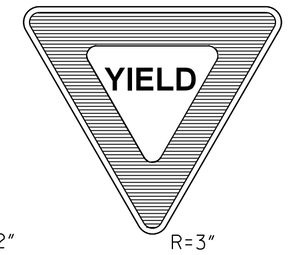 R=2″ R=3″		R=4″	R=1½″	R=2¼″	R=3″	R=3″	R=1½″ R=2¼″		R=1½″ R=2¼″		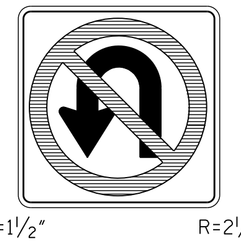 R=1½″ R=2¼″		R=1⅞″	R=2¼″ R=3″	
LETTER & NUMERAL SERIES	12″ SERIES"C"	16″ SERIES"C"	3″ SERIES "C"		5″ SERIES "C"	4″ SERIES "E" 4″ SERIES "E" 10″ SERIES "E"	6″ SERIES "E" 6″ SERIES "E" 14″ SERIES "E"	8″ SERIES "E" 8″ SERIES "E" 16″ SERIES "E"	8″ SERIES "E" 16″ SERIES "E" 8″ SERIES "C" 14″ SERIES "D"							6″ SERIES "D"	6″ SERIES "D"	8″ SERIES "D"
WIDTH OF BORDER INSIDE OUTSIDE	⅞″ WHITE	1¼″ WHITE	5″ RED ¾″ WHITE	6″ RED 1″ WHITE	8″ RED 1½″ WHITE	⅝″ BLACK ⅜″ WHITE	⅞″ BLACK ⅝″ WHITE	1¼″ BLACK ¾″ WHITE	⅞″ BLACK ¾″ WHITE	⅝″ BLACK ⅜″ WHITE	⅞″ BLACK ⅝″ WHITE	⅝″ BLACK ⅜″ WHITE	⅞″ BLACK ⅝″ WHITE	⅝″ BLACK ⅜″ WHITE	⅞″ BLACK ⅝″ WHITE	¾″ BLACK ½″ WHITE	⅞″ BLACK ⅝″ WHITE	1¼″ BLACK ¾″ WHITE
SIZE (WIDTH X HEIGHT)	36″ OCTAGON	48″ OCTAGON	36″ EQUIL. TRIANGLE	48″ EQUIL. TRIANGLE	60″ EQUIL. TRIANGLE	24″ X 30″	36″ X 48″	48″ X 60″	48″ X 96″	24″ X 24″	36″ X 36″	24″ X 24″	36″ X 36″	24″ X 24″	36″ X 36″	30″ X 36″	36″ X 48″	48″ X 60″
COLORS COPY BACKGROUND	WHITE RED	WHITE RED	RED WHITE	RED WHITE	RED WHITE	BLACK WHITE	BLACK WHITE	BLACK WHITE	BLACK WHITE	BLACK & RED WHITE	BLACK & RED WHITE	BLACK & RED WHITE	BLACK & RED WHITE	BLACK & RED WHITE	BLACK & RED WHITE	BLACK WHITE	BLACK WHITE	BLACK WHITE
REFLECTORIZATION	ALL	ALL	ALL	ALL	ALL	B'GROUND	B'GROUND	B'GROUND	BACKGROUND	BACKGROUND, CIRCLE, & DIAG.	BACKGROUND, CIRCLE, & DIAG.	BACKGROUND, CIRCLE, & DIAG.	BACKGROUND, CIRCLE, & DIAG.	BACKGROUND, CIRCLE, & DIAG.	BACKGROUND, CIRCLE, & DIAG.	BACKGROUND	BACKGROUND	BACKGROUND
NUMBER OF POSTS FOR MOUNTING	1	1	1	1	1	1	1	1	1	1	1	1	1	1	1	1	1	1
NUMBER OF HOLES TO BE PUNCHED (⅜″ DIA.)	2	4	2	4	4	2	4	6	10	2	2	2	2	2	2	2	4	6
PUNCHING DISTANCE FROM EACH VERTICAL EDGE	18″ (VERT. CENTER)	9″	18″ (VERT. CENTER)	12″ (FROM CENTER)	15″ (FROM CENTER)	12″ (VERT. CENTER)	3″	9″	9″	12″ (VERT. CENTER)	18″ (VERT. CENTER)	12″ (VERT. CENTER)	18″ (VERT. CENTER)	12″ (VERT. CENTER)	18″ (VERT. CENTER)	15″ (VERT. CENTER)	3″	9″
PUNCHING DISTANCE FROM TOP EDGE	3″; 33″	9″; 39″	3″; 27″	3″; 15″	3″; 21″	3″; 27″	9″; 39″	4″; 30″; 56″	4″; 28″; 52″; 60″; 92″	3″; 21″	6″; 30″	3″; 21″	6″; 30″	3″; 21″	6″; 30″	6″; 30″	9″; 39″	4″; 30″; 56″

SIGN NUMBER	R4-7			R6-3	R5-1		R5-1a	R6-1L, R6-1R	R6-2L, R6-2R	R8-4		R11-1	
ALUMINUM (6061-T6) SIGN BLANK THICKNESS	0.080″	0.125″		0.080″	0.100″	0.125″	0.100″	0.080″	0.080″	0.080″	0.100″	0.125″	0.125″
LEGEND	R=1½″ R=2¼″		R=3″	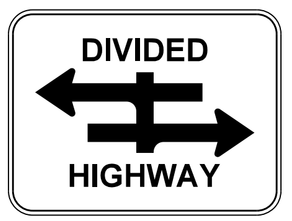	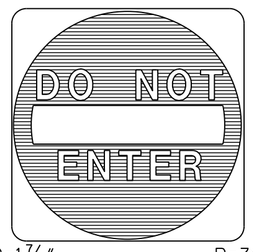 R=1⅞″ R=3″		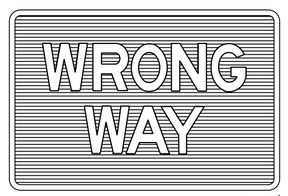 R=2¼″	R=1½″	R=1½″	R=2¼″		R=3″	
LETTER & NUMERAL SERIES					4″ SERIES "D"	6″ SERIES "D"	8″ SERIES "D"	4″ SERIES "D"	6″ SERIES "D"	4″ SERIES "D"	6″ SERIES "D"	8″ SERIES "C"	10″ SERIES "C"
WIDTH OF BORDER INSIDE OUTSIDE	⅝″ BLACK ⅜″ WHITE	⅞″ BLACK ⅝″ WHITE	1¼″ BLACK ¾″ WHITE	⅝″ BLACK ⅜″ WHITE	WHITE OUT-SIDE BORDER	WHITE OUT-SIDE BORDER	1″ WHITE	½″ WHITE	⅝″ BLACK ⅜″ WHITE	⅝″ BLACK ⅜″ WHITE	⅞″ BLACK ⅝″ WHITE	⅞″ BLACK ⅝″ WHITE	1¼″ BLACK ¾″ WHITE
SIZE (WIDTH X HEIGHT)	24″ X 30″	36″ X 48″	48″ X 60″	30″ X 24″	36″ X 36″	48″ X 48″	42″ X 30″	36″ X 12″	24″ X 30″	30″ X 24″	48″ X 36″	36″ X 48″	48″ X 60″
COLORS COPY BACKGROUND	BLACK WHITE	BLACK WHITE	BLACK WHITE	BLACK WHITE	WHITE RED	WHITE RED	WHITE RED	BLACK (WHITE ARROW) BLACK	BLACK WHITE	BLACK WHITE	BLACK WHITE	BLACK WHITE	BLACK WHITE
REFLECTORIZATION	BACKGROUND	BACKGROUND	BACKGROUND	BACKGROUND	ALL	ALL	ALL	ARROW & BORDER	BACKGROUND	BACKGROUND	BACKGROUND	BACKGROUND	BACKGROUND
NUMBER OF POSTS FOR MOUNTING	1	1	1	1	1	1	1	1	1	1	2	1	1
NUMBER OF HOLES TO BE PUNCHED (⅜″ DIA.)	2	4	6	2	2	4	4	2	2	2	4	4	6
PUNCHING DISTANCE FROM EACH VERTICAL EDGE	12″ (VERT. CENTER)	3″	9″	15″ (VERT. CENTER)	18″ (VERT. CENTER)	9″	9″	18″ (VERT. CENTER)	12″ (VERT. CENTER)	15″ (VERT. CENTER)	9″	3″	9″
PUNCHING DISTANCE FROM TOP EDGE	3″; 27″	9″; 39″	4″; 30″; 56″	3″; 21″	6″; 30″	4″; 44″	3″; 27″	1½″; 10½″	3″; 27″	3″; 21″	3″; 33″	9″; 39″	4″; 30″; 56″

GENERAL NOTES:

1. THE QUANTITIES LISTED ON THE SUMMARY OF QUANTITIES SHEET FOR THE SIGNS SHOWN ON THIS SHEET WILL BE USED AS THE BASIS FOR FINAL PAYMENT, EXCEPT WHERE SIGNS ARE MODIFIED FROM THAT SHOWN.

2. THE SPEED LIMITS REQUIRED ON SIGNS R2-1 AND R2-4a WILL BE SHOWN ON INDIVIDUAL PLAN SHEETS.

△1 3. THE DESIGN OF ALL STANDARD ROADSIDE SIGNS SHALL CONFORM TO THE CRITERIA IN THE LATEST VERSION OF THE STANDARD HIGHWAY SIGNS MANUAL IN CONJUNCTION WITH THE LATEST VERSION OF THE MUTCD.

DATE	REVISION	BY
12/11/25	REVISED TEXT	STN

MISSISSIPPI DEPARTMENT OF TRANSPORTATION
ROADWAY DESIGN DIVISION
STANDARD PLAN

STANDARD ROADSIDE SIGNS

MDOT MISSISSIPPI DEPARTMENT OF TRANSPORTATION

WORKING NUMBER SN-3A

ISSUE DATE: AUGUST 01, 2017

SHEET NUMBER 6304

ADDENDUM

STATE	PROJECT NO.
MISS.	

SIGN NUMBER	W1-1L W1-1R		W1-2L W1-2R		W1-3L W1-3R		W1-4L W1-4R		W1-6L W1-6R	W1-7	W3-1 △1		W3-2 △1		W3-3		W4-1L W4-1R	W4-101L W4-101R
ALUMINUM (6061-T6) SIGN BLANK THICKNESS	0.125″		0.125″		0.125″		0.125″		0.100″	0.100″	0.125″		0.125″		0.125″		0.125″	0.125″
LEGEND	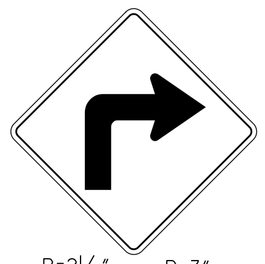 R=2¼″ R=3″		R=2¼″ R=3″		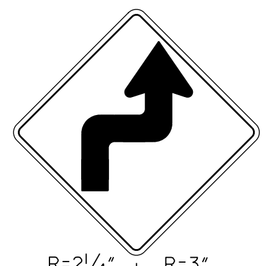 R=2¼″ R=3″		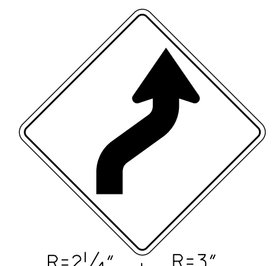 R=2¼″ R=3″		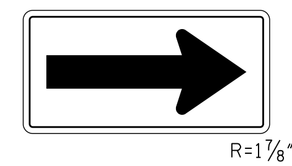 R=1⅞″	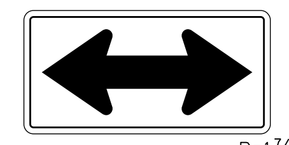 R=1⅞″	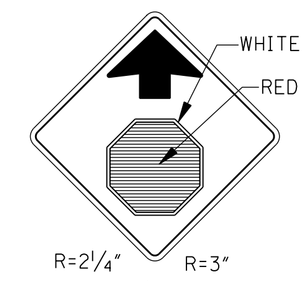 R=2¼″ R=3″		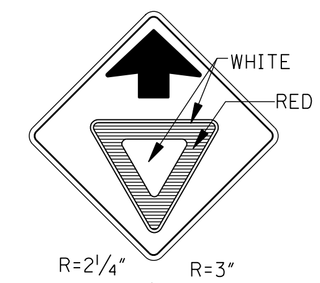 R=2¼″ R=3″		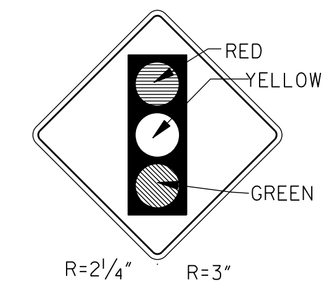 R=2¼″ R=3″		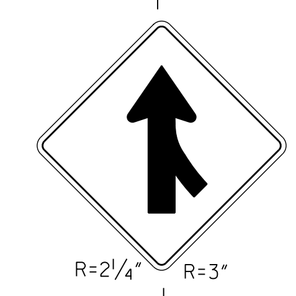 R=2¼″ R=3″	
LETTER & NUMERAL SERIES																		
WIDTH OF BORDER INSIDE	⅞″ BLACK	1¼″ BLACK	⅞″ BLACK	1¼″ BLACK	⅞″ BLACK	1¼″ BLACK	⅞″ BLACK	1¼″ BLACK	¾″ BLACK	¾″ BLACK	⅞″ BLACK	1¼″ BLACK	⅞″ BLACK	1¼″ BLACK	⅞″ BLACK	1¼″ BLACK	⅞″ BLACK	1¼″ BLACK
WIDTH OF BORDER OUTSIDE	⅝″ YELLOW	¾″ YELLOW	⅝″ YELLOW	¾″ YELLOW	⅝″ YELLOW	¾″ YELLOW	⅝″ YELLOW	¾″ YELLOW	½″ YELLOW	½″ YELLOW	⅝″ YELLOW	¾″ YELLOW	⅝″ YELLOW	¾″ YELLOW	⅝″ YELLOW	¾″ YELLOW	⅝″ YELLOW	¾″ YELLOW
SIZE (WIDTH X HEIGHT)	36″ X 36″	48″ X 48″	36″ X 36″	48″ X 48″	36″ X 36″	48″ X 48″	36″ X 36″	48″ X 48″	48″ X 24″	48″ X 24″	36″ X 36″	48″ X 48″	36″ X 36″	48″ X 48″	36″ X 36″	48″ X 48″	36″ X 36″	48″ X 48″
COLORS COPY	BLACK	BLACK	BLACK	BLACK	BLACK	BLACK	BLACK	BLACK	BLACK	BLACK	BLACK	BLACK	BLACK	BLACK	BLACK	BLACK	BLACK	BLACK
COLORS BACKGROUND	YELLOW	YELLOW	YELLOW	YELLOW	YELLOW	YELLOW	YELLOW	YELLOW	YELLOW	YELLOW	YELLOW	YELLOW	YELLOW	YELLOW	YELLOW	YELLOW	YELLOW	YELLOW
REFLECTORIZATION	BACKGROUND	BACKGROUND	BACKGROUND	BACKGROUND	BACKGROUND	BACKGROUND	BACKGROUND	BACKGROUND	BACKGROUND	BACKGROUND	BACKGROUND & SYMBOL	BACKGROUND & SYMBOL	BACKGROUND & SYMBOL	BACKGROUND & SYMBOL	BACKGROUND & "LIGHTS"	BACKGROUND & "LIGHTS"	BACKGROUND	BACKGROUND
NUMBER OF POSTS FOR MOUNTING	1	1	1	1	1	1	1	1	2	2	1	1	1	1	1	1	1	1
NUMBER OF HOLES TO BE PUNCHED (⅜″ DIA.)	2	4	2	4	2	4	2	4	4	4	2	4	2	4	2	4	2	4
PUNCHING DISTANCE FROM EACH VERT. EDGE	VERT. CENTER	15″ FROM VERT. CENTER	VERT. CENTER	15″ FROM VERT. CENTER	VERT. CENTER	15″ FROM VERT. CENTER	VERT. CENTER	15″ FROM VERT. CENTER	9″	9″	VERT. CENTER	15″ FROM VERT. CENTER	VERT. CENTER	15″ FROM VERT. CENTER	VERT. CENTER	15″ FROM VERT. CENTER	VERT. CENTER	15″ FROM VERT. CENTER
PUNCHING DISTANCE FROM TOP EDGE	18″ FROM HORIZ. CENTER	15″ FROM HORIZ. CENTER	18″ FROM HORIZ. CENTER	15″ FROM HORIZ. CENTER	18″ FROM HORIZ. CENTER	15″ FROM HORIZ. CENTER	18″ FROM HORIZ. CENTER	15″ FROM HORIZ. CENTER	3″; 21″	3″; 21″	18″ FROM HORIZ. CENTER	15″ FROM HORIZ. CENTER	18″ FROM HORIZ. CENTER	15″ FROM HORIZ. CENTER	18″ FROM HORIZ. CENTER	15″ FROM HORIZ. CENTER	18″ FROM HORIZ. CENTER	15″ FROM HORIZ. CENTER

SIGN NUMBER	W4-2		W6-1		W6-2		W6-3		W13-1	W13-2	W13-3		W10-1			
ALUMINUM (6061-T6) SIGN BLANK THICKNESS	0.125″		0.125″		0.125″		0.125″		0.080″	0.125″	0.125″		0.100″			
LEGEND	NOTE: SEE PLAN SHEETS FOR IDEOGRAM REQUIRED ON INDIVIDUAL SIGNS. 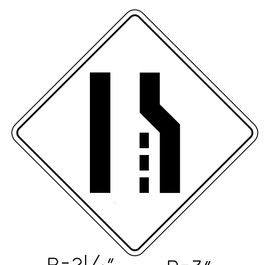 R=2¼″ R=3″		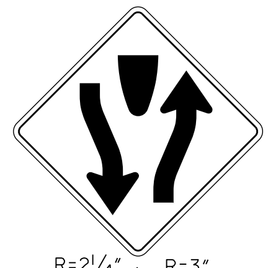 R=2¼″ R=3″		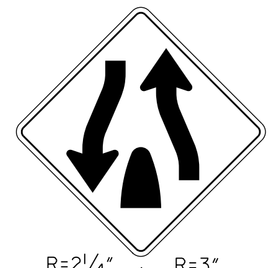 R=2¼″ R=3″		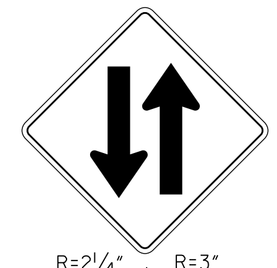 R=2¼″ R=3″		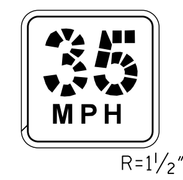 R=1½″	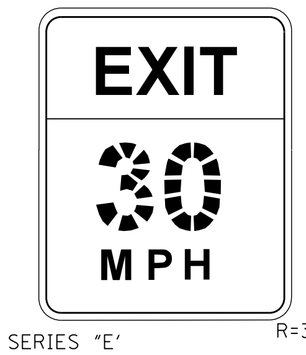 R=3″	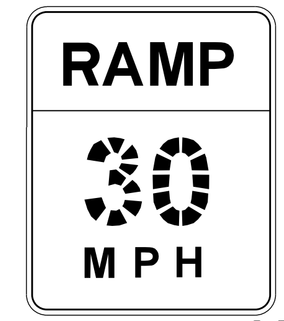 R=3″		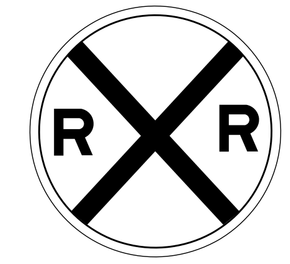			
LETTER & NUMERAL SERIES									10″ SERIES "E" 4″ SERIES "E"	8″ SERIES "E' 16″ SERIES "E" 6″ SERIES "E' (SEE NOTE)	8″ SERIES "E' 16″ SERIES "E" 6″ SERIES "E' (SEE NOTE)		8″ SERIES "E"			
WIDTH OF BORDER INSIDE	⅞″ BLACK	1¼″ BLACK	⅞″ BLACK	1¼″ BLACK	⅞″ BLACK	1¼″ BLACK	⅞″ BLACK	1¼″ BLACK	⅝″ BLACK	1¼″ BLACK	1¼″ BLACK		¾″ BLACK			
WIDTH OF BORDER OUTSIDE	⅝″ YELLOW	¾″ YELLOW	⅝″ YELLOW	¾″ YELLOW	⅝″ YELLOW	¾″ YELLOW	⅝″ YELLOW	¾″ YELLOW	⅜″ YELLOW	¾″ YELLOW	¾″ YELLOW		½″ YELLOW			
SIZE (WIDTH X HEIGHT)	36″ X 36″	48″ X 48″	36″ X 36″	48″ X 48″	36″ X 36″	48″ X 48″	36″ X 36″	48″ X 48″	24″ X 24″	48″ X 60″	48″ X 60″		36″ DIAMETER			
COLORS COPY	BLACK	BLACK	BLACK	BLACK	BLACK	BLACK	BLACK	BLACK	BLACK	BLACK	BLACK		BLACK			
COLORS BACKGROUND	YELLOW	YELLOW	YELLOW	YELLOW	YELLOW	YELLOW	YELLOW	YELLOW	YELLOW	YELLOW	YELLOW		YELLOW			
REFLECTORIZATION	BACKGROUND	BACKGROUND	BACKGROUND	BACKGROUND	BACKGROUND	BACKGROUND	BACKGROUND	BACKGROUND	BACKGROUND	BACKGROUND	BACKGROUND		BACKGROUND			
NUMBER OF POSTS FOR MOUNTING	1	1	1	1	1	1	1	1	1	1	1		1			
NUMBER OF HOLES TO BE PUNCHED (⅜″ DIA.)	2	4	2	4	2	4	2	4	2	6	6		2			
PUNCHING DISTANCE FROM EACH VERT. EDGE	VERT. CENTER	15″ FROM VERT. CENTER	VERT. CENTER	15″ FROM VERT. CENTER	VERT. CENTER	15″ FROM VERT. CENTER	VERT. CENTER	15″ FROM VERT. CENTER	12″ (VERT. CENTER)	9″	9″		15″			
PUNCHING DISTANCE FROM TOP EDGE	18″ FROM HORIZ. CENTER	15″ FROM HORIZ. CENTER	18″ FROM HORIZ. CENTER	15″ FROM HORIZ. CENTER	18″ FROM HORIZ. CENTER	15″ FROM HORIZ. CENTER	18″ FROM HORIZ. CENTER	15″ FROM HORIZ. CENTER	3″; 21″	4″; 30″; 56″	4″; 30″; 56″		15″ FROM HORIZ. CENTER			

GENERAL NOTES:

1. THE QUANTITIES LISTED ON THE SUMMARY OF QUANTITIES SHEET FOR THE SIGNS SHOWN ON THIS SHEET WILL BE USED AS THE BASIS FOR FINAL PAYMENT, EXCEPT WHERE SIGNS ARE MODIFIED FROM THAT SHOWN.

2. SIGNS W13-2 AND W13-3- THE STROKE WIDTH OF THE LETTER AND NUMERALS SHALL BE WIDENED TO 20% OF THE LETTER OR NUMERAL HEIGHT.

3. THE SPEEDS REQUIRED ON SIGNS W13-1, W13-2 AND W13-3 WILL BE SHOWN ON INDIVIDUAL PLAN SHEETS.

△1 4. THE DESIGN OF ALL STANDARD ROADWAY SIGNS SHALL CONFORM TO THE CRITERIA IN THE LATEST VERSION OF THE STANDARD HIGHWAY SIGNS MANUAL IN CONJUNCTION WITH THE LATEST VERSION OF THE MUTCD.

DATE	REVISION	BY
12/11/25	REVISED TEXT	STN

MISSISSIPPI DEPARTMENT OF TRANSPORTATION
ROADWAY DESIGN DIVISION
STANDARD PLAN

STANDARD ROADSIDE SIGNS

MDOT MISSISSIPPI DEPARTMENT OF TRANSPORTATION

WORKING NUMBER SN-3B

ISSUE DATE: AUGUST 01, 2017

SHEET NUMBER 6305

ADDENDUM	STATE	PROJECT NO.
	MISS.	

ROADSIDE SIGN IN RURAL AREA

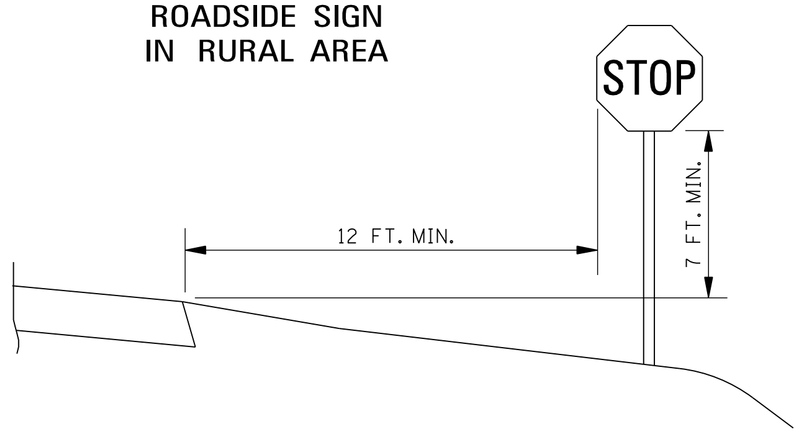

ROADSIDE SIGN IN RURAL AREA

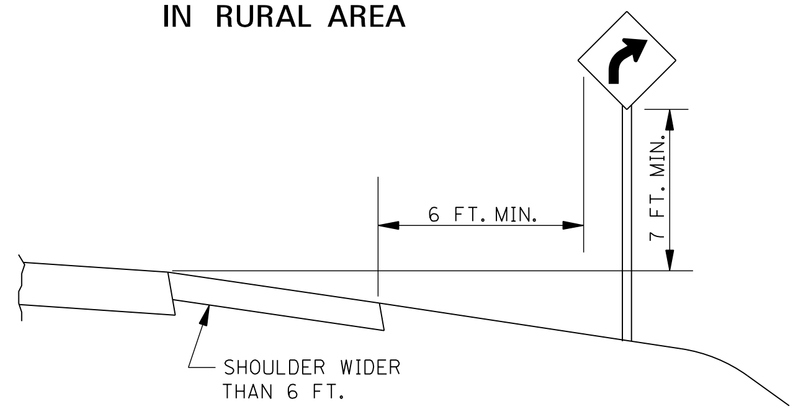

ROADSIDE SIGN IN BUSINESS, COMMERCIAL, OR RESIDENTIAL AREA

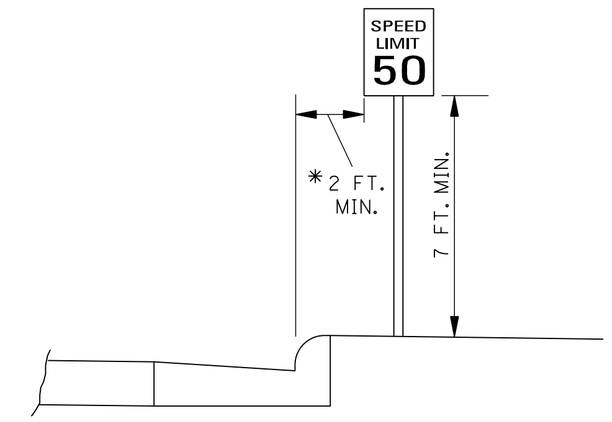

△1 * THE 2 FT. MINIMUM OFFSET APPLIES ONLY TO STANDARD SIGNS MOUNTED ON U-POSTS OR SQUARE TUBE POSTS. ALL STANDARD SIGNS MOUNTED ON PIPE WILL BE OFFSET A MINIMUM OF 4 FT FROM FACE OF CURB. RAMP DESTINATION SIGNS WILL BE OFFSET 4 FT. FROM THE SHOULDER BREAK.

WARNING SIGN WITH ADVISORY SPEED PLAQUE IN RURAL AREA

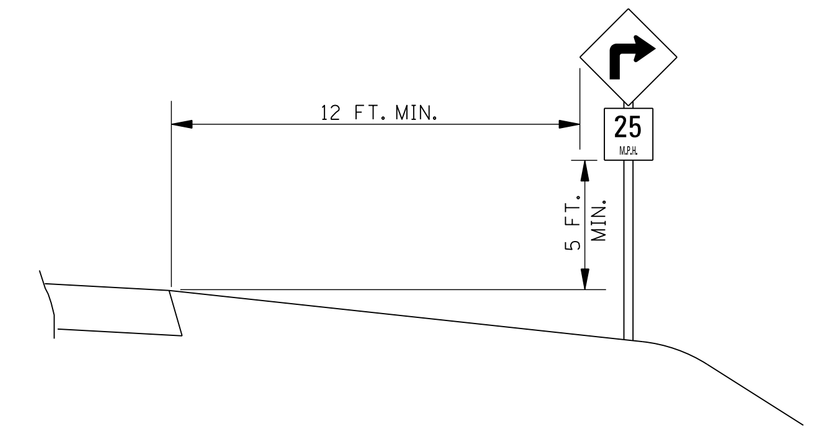

ROADSIDE ASSEMBLY IN RURAL AREA

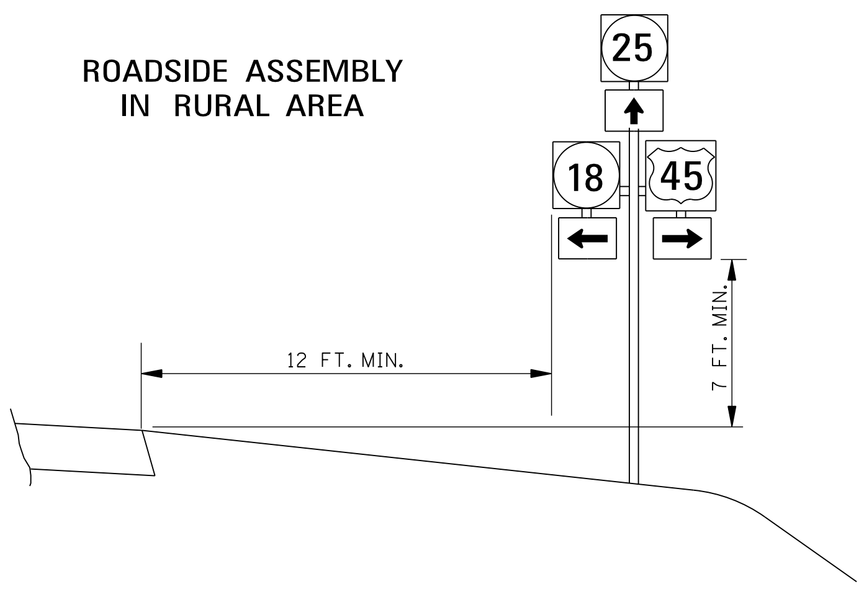

INTERSTATE OR FREEWAY SIGN WITH SECONDARY SIGN

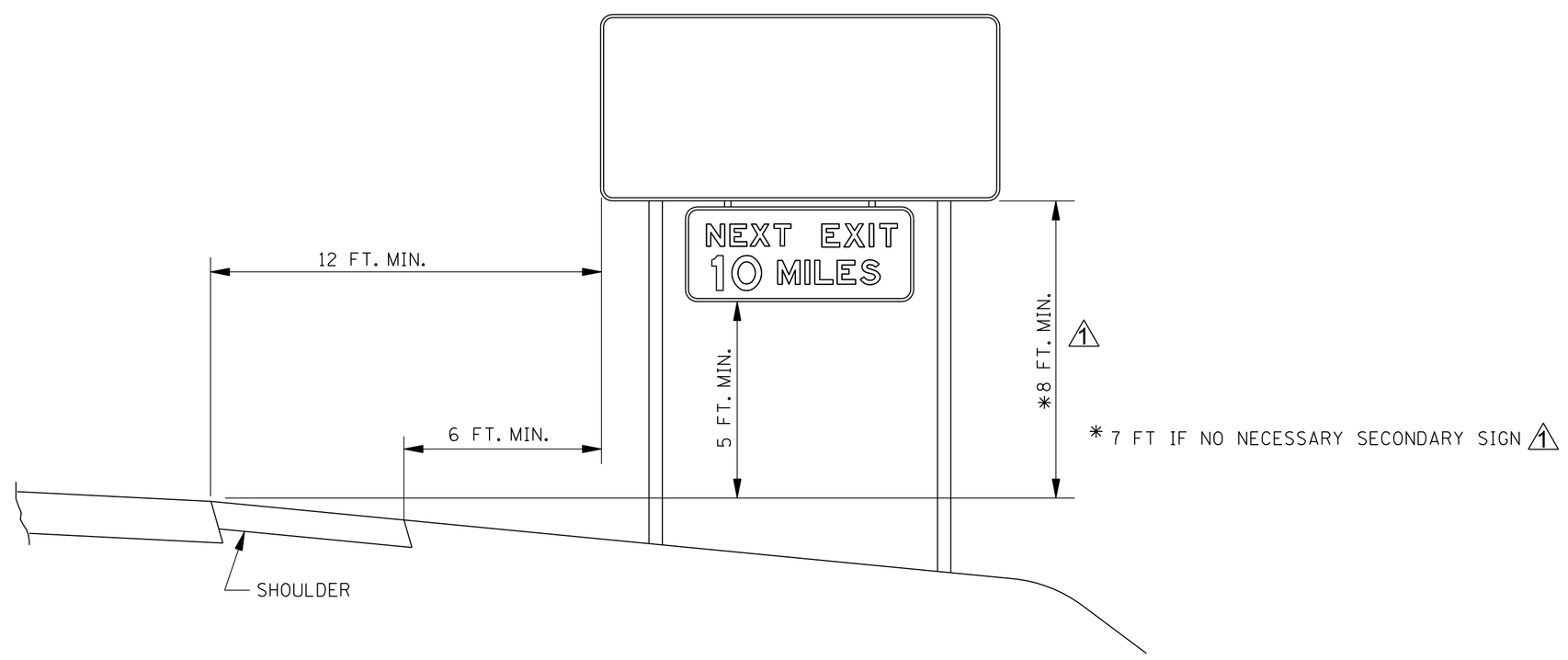

OVERHEAD SIGN

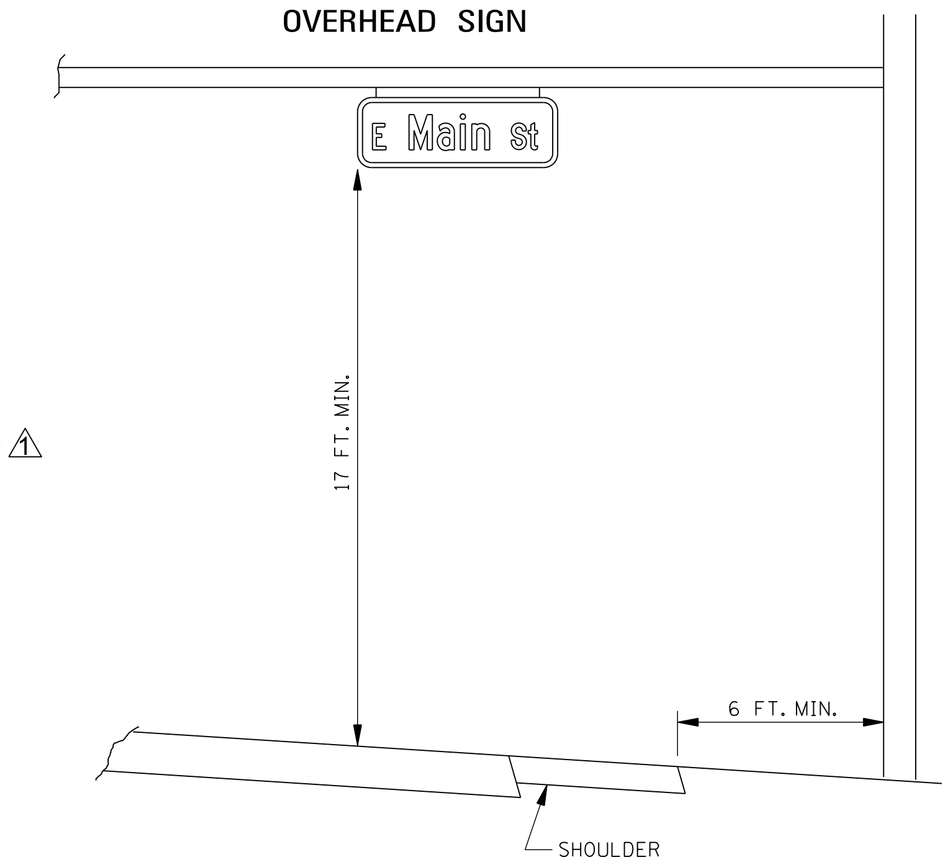

SIGN ON NOSE OF MEDIAN

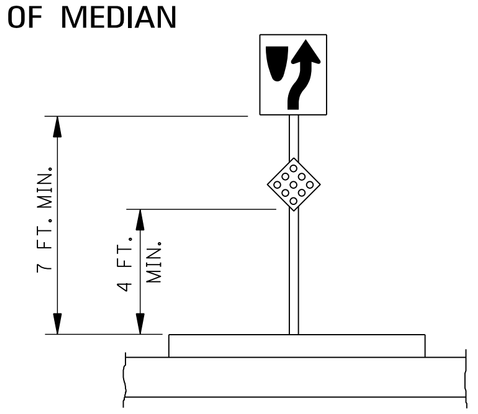

SIGNS IN ISLANDS OR BEHIND CURB USING U-POSTS OR PIPE POSTS

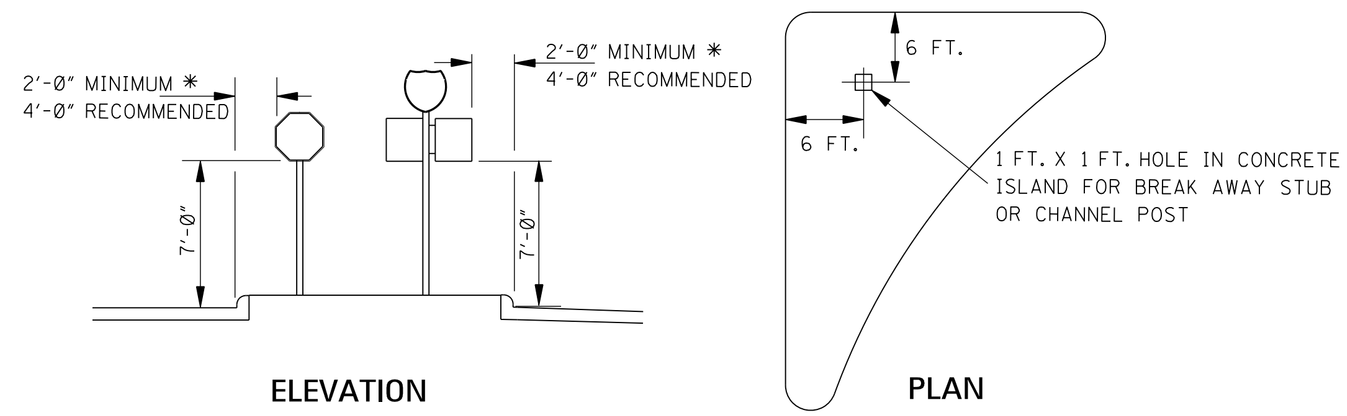

△1 * THE 2 FT. MINIMUM OFFSET APPLIES ONLY TO STANDARD SIGNS MOUNTED ON U-POSTS. ALL STANDARD SIGNS MOUNTED ON PIPE WILL BE OFFSET A MINIMUM OF 4 FT. RAMP DESTINATION SIGNS WILL BE OFFSET 4 FT. FROM THE SHOULDER BREAK.

GENERAL NOTES:

△1 1. SEE SECTION 2A-16 OF THE MUTCD FOR REDUCED LATERAL OFFSET DISTANCES THAT MAY BE USED IN AREAS WHERE LATERAL OFFSETS ARE LIMITED, AND IN BUSINESS, COMMERCIAL, OR RESIDENTIAL AREAS WHERE SIDEWALK WIDTH IS LIMITED OR WHERE EXISTING POLES ARE CLOSE TO THE CURB.

2. SIGNS SHALL BE LOCATED OUTSIDE THE CLEAR ZONE UNLESS PLACED ON A BREAKAWAY OR YIELDING SUPPORT.

△1	12/11/25	REVISED TEXT	STN
	DATE	REVISION	BY

MISSISSIPPI DEPARTMENT OF TRANSPORTATION
ROADWAY DESIGN DIVISION
STANDARD PLAN

STANDARD ROADSIDE SIGN ASSEMBLY AND INSTALLATION

MDOT MISSISSIPPI DEPARTMENT OF TRANSPORTATION

WORKING NUMBER SN-4

ISSUE DATE: AUGUST 01, 2017

SHEET NUMBER 6306

STATE	PROJECT NO.
MISS.	

ADDENDUM

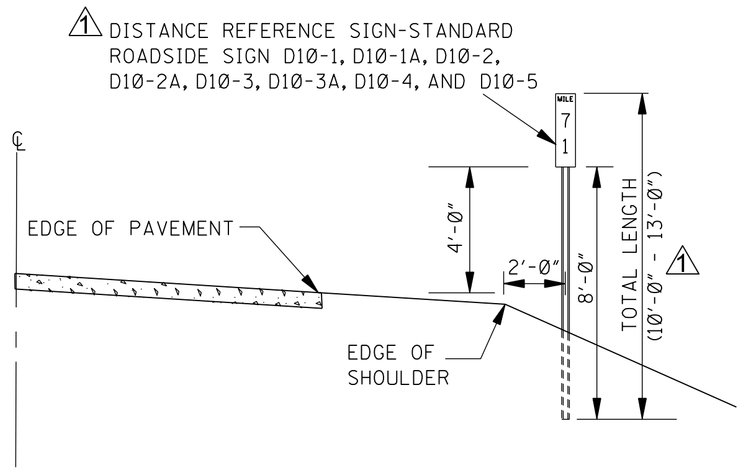

DISTANCE REFERENCE SIGN MOUNTING ON OUTSIDE SHOULDER ALONG MAIN FACILITY

NOTE: SIGN MOUNTING ON LEFT LANE SHOULDER SHALL BE 90° OPPOSITE THE RIGHT LANE STATION. IF CONDITIONS ARE SUCH THAT MILE SIGN CANNOT BE LOCATED WITHIN 50 FEET OF ITS TRUE LOCATION, IT SHALL BE OMITTED ENTIRELY.

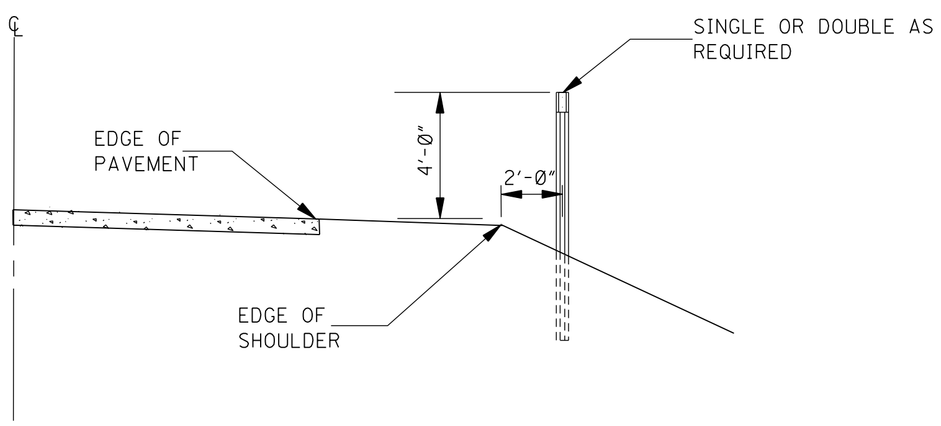

DELINEATOR MOUNTING ON OUTSIDE SHOULDER ALONG MAIN FACILITY OR RAMP

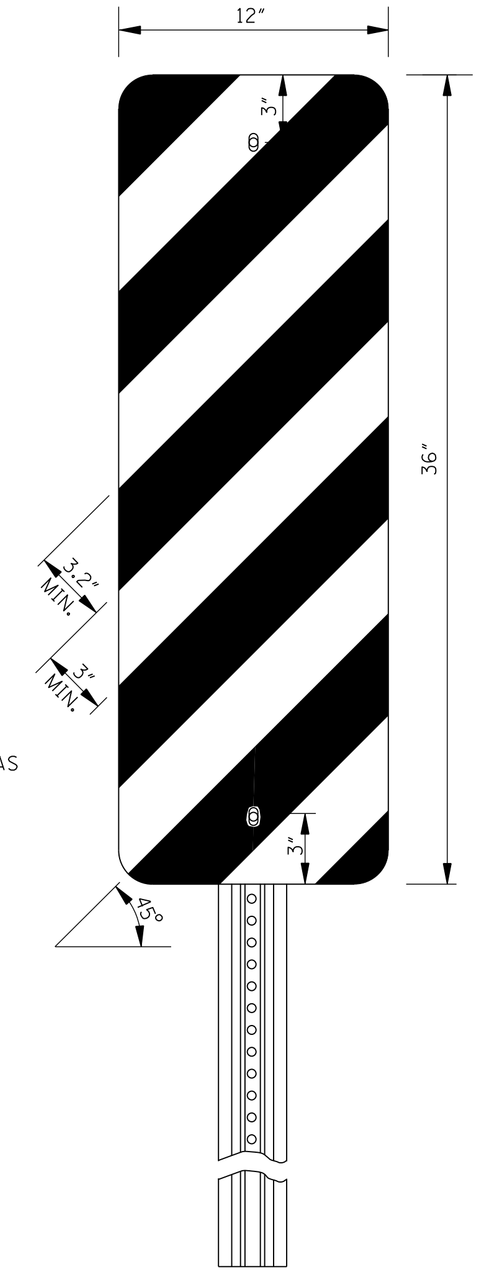

DETAIL OF TYPE 3 OBJECT MARKER

NOTE: COLORS- BLACK AND YELLOW. STRIPING SHOWN ABOVE FOR RIGHT SIDE ONLY. STRIPES SLANT DOWNWARD TO THE RIGHT FOR LEFT SIDE OF BRIDGE END. SEE DETAIL BELOW.

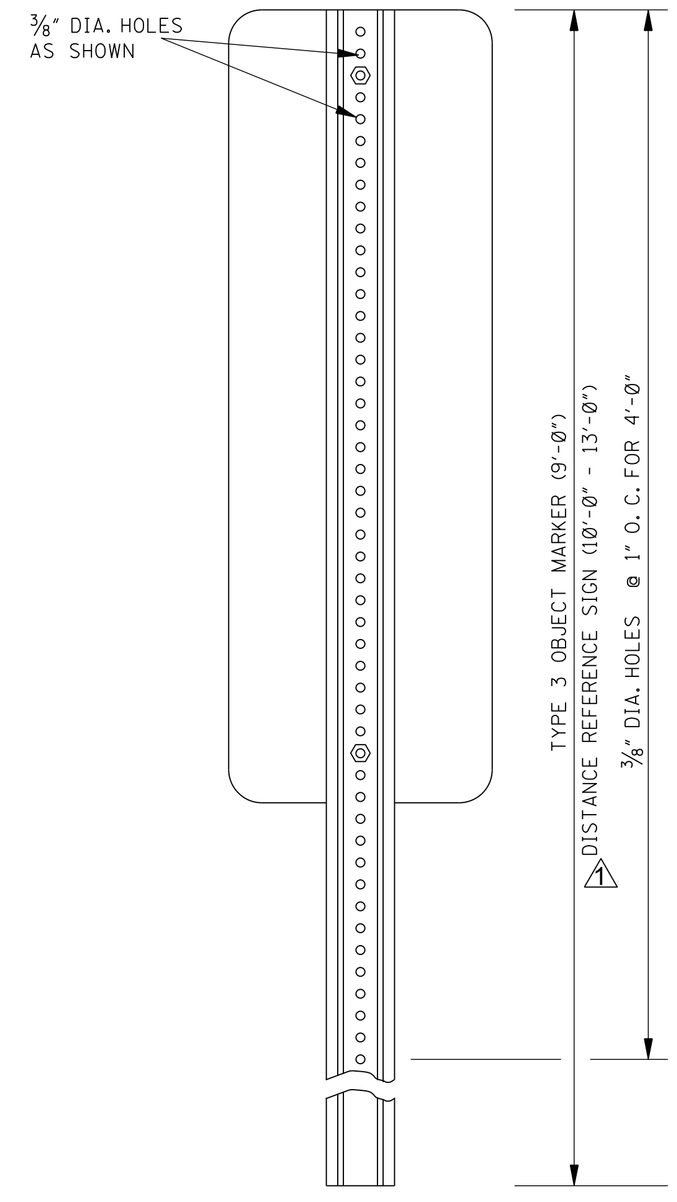

REAR VIEW OF TYPE 3 OBJECT MARKER OR DISTANCE REFERENCE SIGN ASSEMBLY

NOTE: TYPE 3 OBJECT MARKER AND DISTANCE REFERENCE SIGNS SHALL BE FASTENED TO U-SECTION POSTS WITH 5/16" DIA. BLIND FASTENERS OF THE COLLAR TYPE.

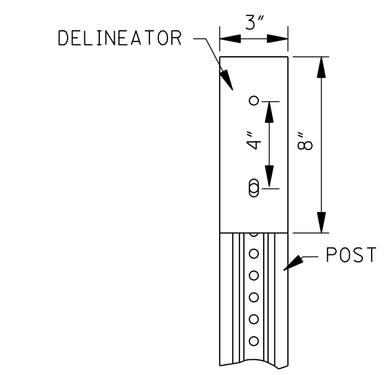

DETAIL OF SINGLE WHITE OR SINGLE YELLOW DELINEATOR

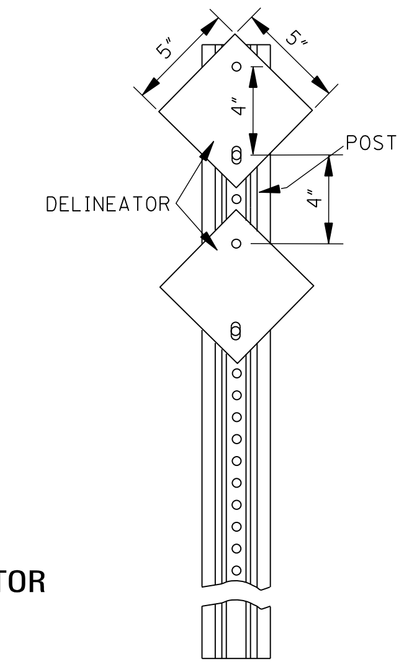

DETAIL OF DOUBLE WHITE OR DOUBLE YELLOW DELINEATOR

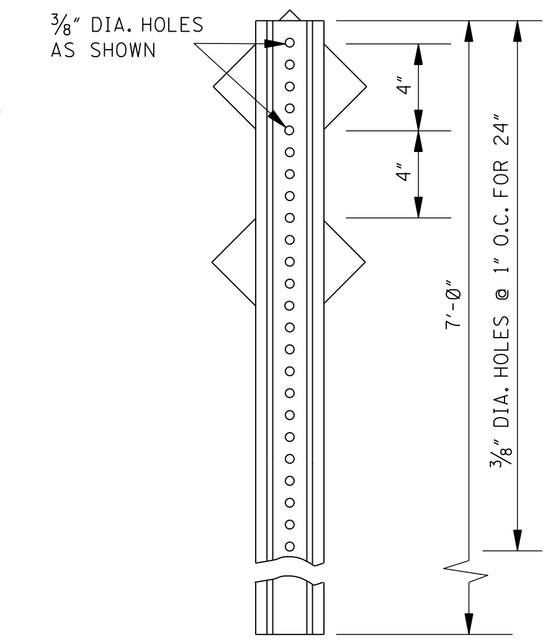

REAR VIEW OF DELINEATOR ASSEMBLY

1 DELINEATORS, OBJECT MARKERS OR DISTANCE REFERENCE SIGNS (D10-1, D10-1A, D10-2, D10-2A, D10-3, D10-3A, D10-4, AND D10-5) ARE MOUNTED TO THIS FACE AS SHOWN.

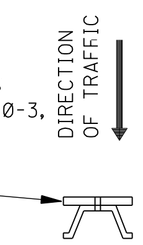

MOUNTING DETAIL

NOTE: DELINEATORS SHALL BE FASTENED TO U-SECTION POSTS WITH 1/4" DIA. BLIND FASTENERS OF THE COLLAR TYPE.

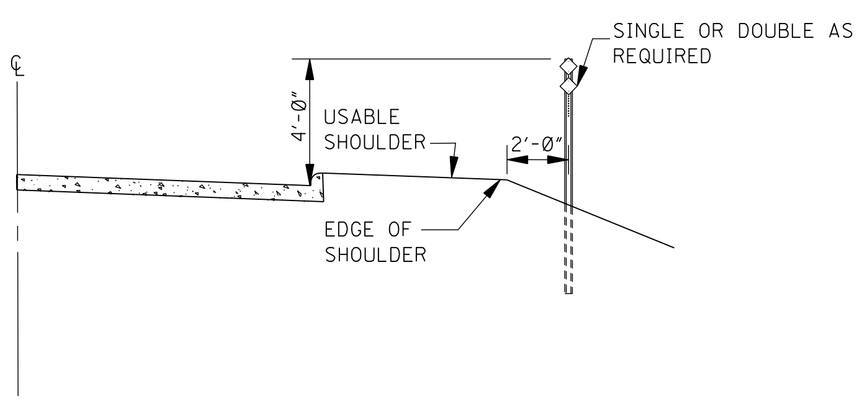

DELINEATOR MOUNTING ON OUTSIDE SHOULDER WITH MOUNTABLE CURB ALONG MAIN FACILITY OR RAMP

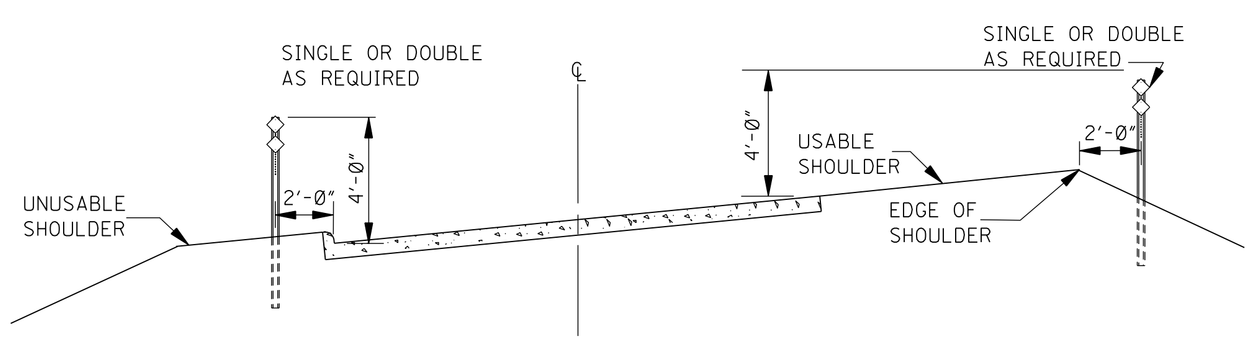

DELINEATOR MOUNTING ON INTERCHANGE LOOPS WITH UNMOUNTABLE CURB ON INSIDE

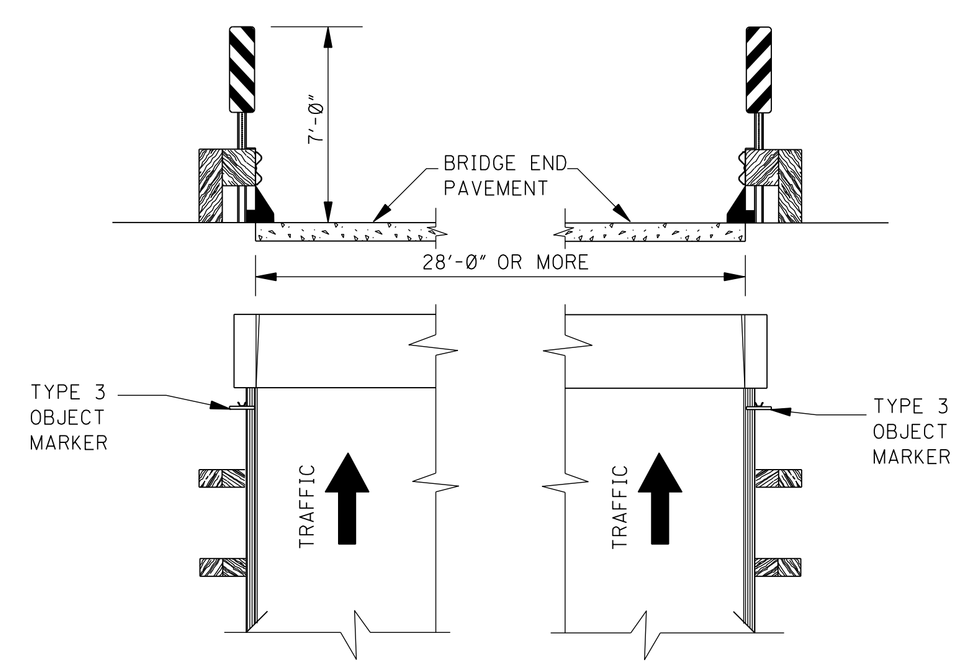

DETAIL OF TYPE 3 OBJECT MARKER INSTALLATION

GENERAL NOTES:

1. DELINEATORS AND TYPE 3 OBJECT MARKER SHALL BE RETROREFLECTIVE SHEETING ON 0.080" THICK ALUMINUM SHEET OR 14 GAGE GALVANIZED SHEET STEEL.
2. DELINEATOR, TYPE 3 OBJECT MARKER AND DISTANCE REFERENCE SIGN POSTS SHALL BE GALVANIZED STEEL. THE POSTS SHALL BE FABRICATED BEFORE THE METAL IS GALVANIZED.
3. WEIGHT WITHOUT GROUND PLATES:
   A. DELINEATOR POST 7'-0" - 2.0 lb/ft TO 2.5 lb/ft
   B. TYPE 3 OBJECT MARKER POST 9'-0" - 2.5 lb/ft TO 3.0 lb/ft
   C. DISTANCE REFERENCE SIGN POST 10'-0", 11'-0", & 12'-0" - 3.0 lb/ft TO 3.5 lb/ft
4. UNIT PRICE OF DELINEATORS AND TYPE 3 OBJECT MARKERS SHALL INCLUDE COST OF POST. DISTANCE REFERENCE SIGN POST WILL BE PAID FOR PER FOOT.
5. RADIUS IN BENDS OF POST CROSS SECTION NOT TO EXCEED 13/32 FOR HOT ROLLED SECTION.
6. GROUND PLATE NOT REQUIRED ON U-SECTION POST.

DATE	REVISION	BY
12/11/25	REVISED TEXT	STN

MISSISSIPPI DEPARTMENT OF TRANSPORTATION
ROADWAY DESIGN DIVISION
STANDARD PLAN

TYPICAL INSTALLATION AND DETAILS OF DELINEATORS AND DISTANCE REFERENCE SIGNS

MDOT

WORKING NUMBER SN-8

SHEET NUMBER 6314

ISSUE DATE: AUGUST 01, 2017

STATE	PROJECT NO.
MISS.	

ADDENDUM

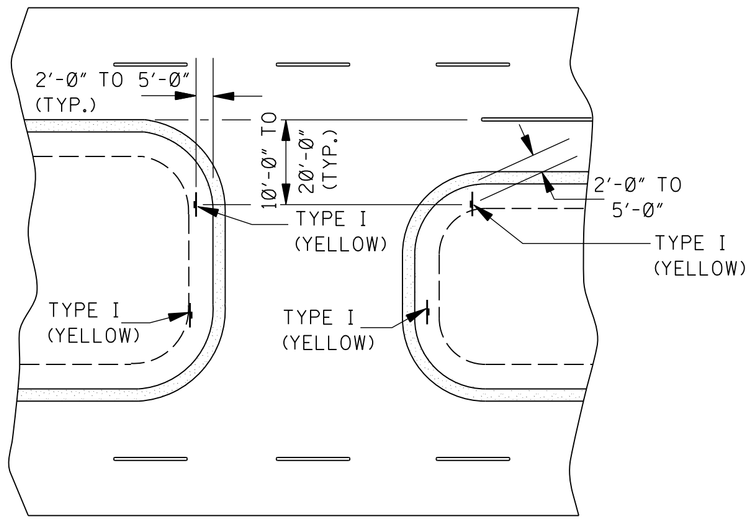

TYPICAL DELINEATION AT A CROSSOVER WITH USABLE SHOULDERS AND A MEDIAN WIDTH OVER 42'–0"

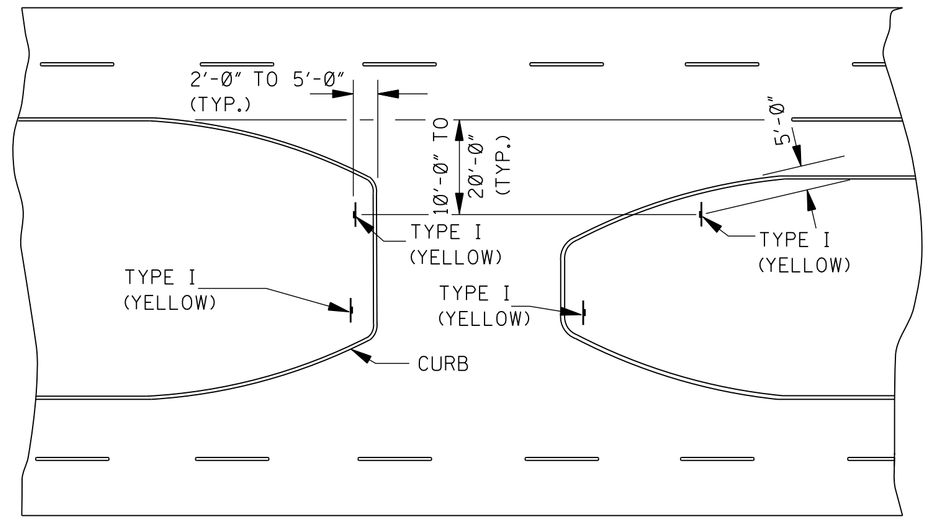

TYPICAL DELINEATION AT A CURBED CROSSOVER WITH A MEDIAN WIDTH OVER 42'–0"

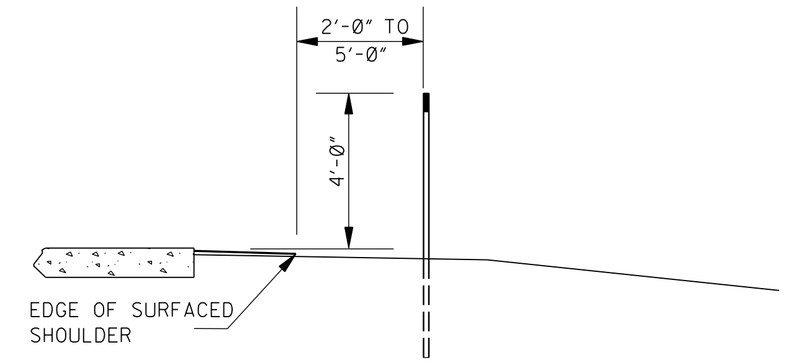

DELINEATOR MOUNTING ON CROSSOVER WITH USABLE SHOULDER

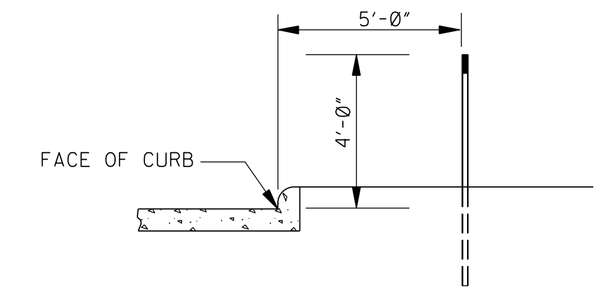

DELINEATOR MOUNTING ON CURBED CROSSOVER

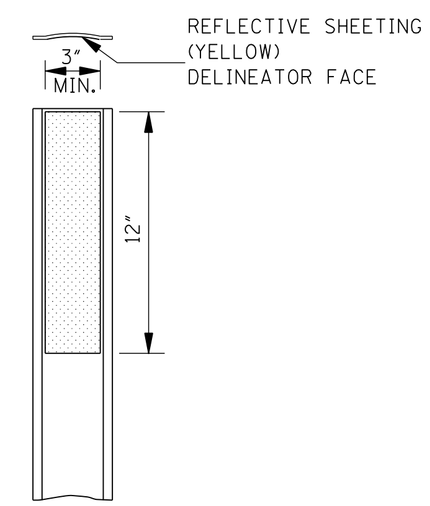

DETAIL OF TYPE I
FLEXIBLE POST DELINEATOR

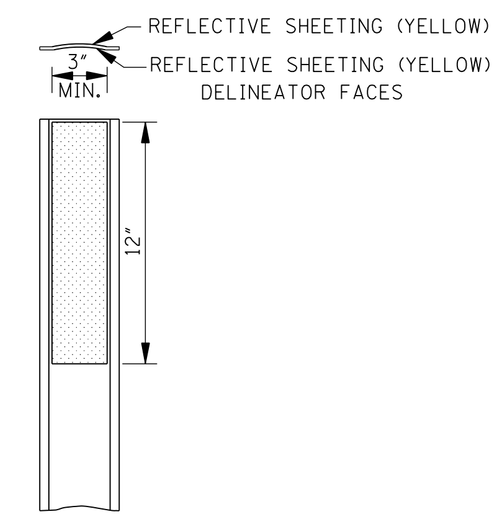

DETAIL OF TYPE II
FLEXIBLE POST DELINEATOR

△1 NOTE: FLEXIBLE POST DELINEATORS ALLOWED FOR USE MUST BE FROM MDOT'S "APPROVED PRODUCTS LIST."

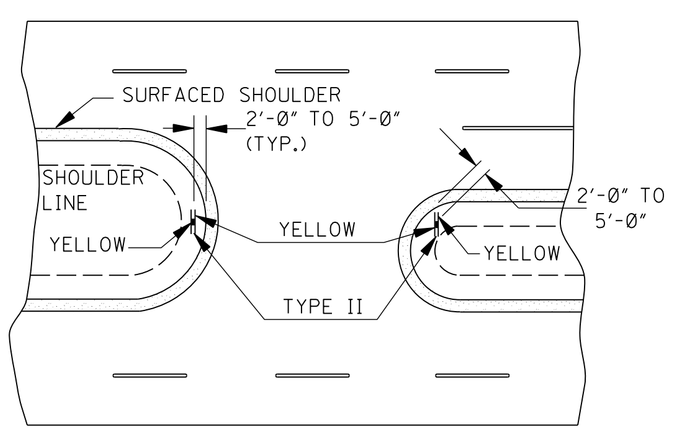

TYPICAL DELINEATION AT A CROSSOVER WITH USABLE SHOULDERS AND A MEDIAN WIDTH OF 42'–0" OR LESS

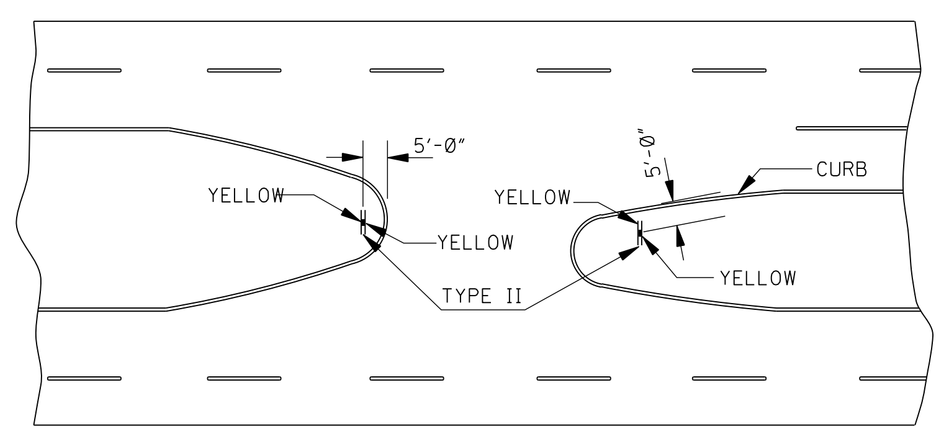

TYPICAL DELINEATION AT A CURBED CROSSOVER WITH A MEDIAN WIDTH OF 42'–0" OR LESS

NOTE: PLACE DELINEATORS NO MORE THAN 20'-0" FROM EDGE OF TRAVEL LANES EDGES.

GENERAL NOTES:

1. THE UNIT PRICE OF DELINEATOR INCLUDES: COST(S) OF DELINEATOR FACE(S), POST, HARDWARE AND INSTALLATION.

△1 2. DELINEATOR FACE WILL BE RETROREFLECTIVE SHEETING TYPE AS SPECIFIED IN PLANS.

3. POST REQUIRING THE INSTALLATION OF A BASE SHALL BE INSTALLED IN ACCORDANCE WITH THE MANUFACTURER'S RECOMMENDATION.

△1 4. THE COLOR OF DELINEATORS SHALL BE THE COLOR OF THE ADJACENT EDGELINE PER MUTCD SECTIONS 3A.03, 3B.09, AND 3G.03

DATE	REVISION	BY
12/11/25	REVISED TEXT	STN

MISSISSIPPI DEPARTMENT OF TRANSPORTATION
ROADWAY DESIGN DIVISION
STANDARD PLAN

TYPICAL CROSSOVER DELINEATION

MDOT MISSISSIPPI DEPARTMENT OF TRANSPORTATION

WORKING NUMBER
SN-8B

ISSUE DATE: AUGUST 01, 2017

SHEET NUMBER
6316

ADDENDUM

STATE	PROJECT NO.
MISS.	

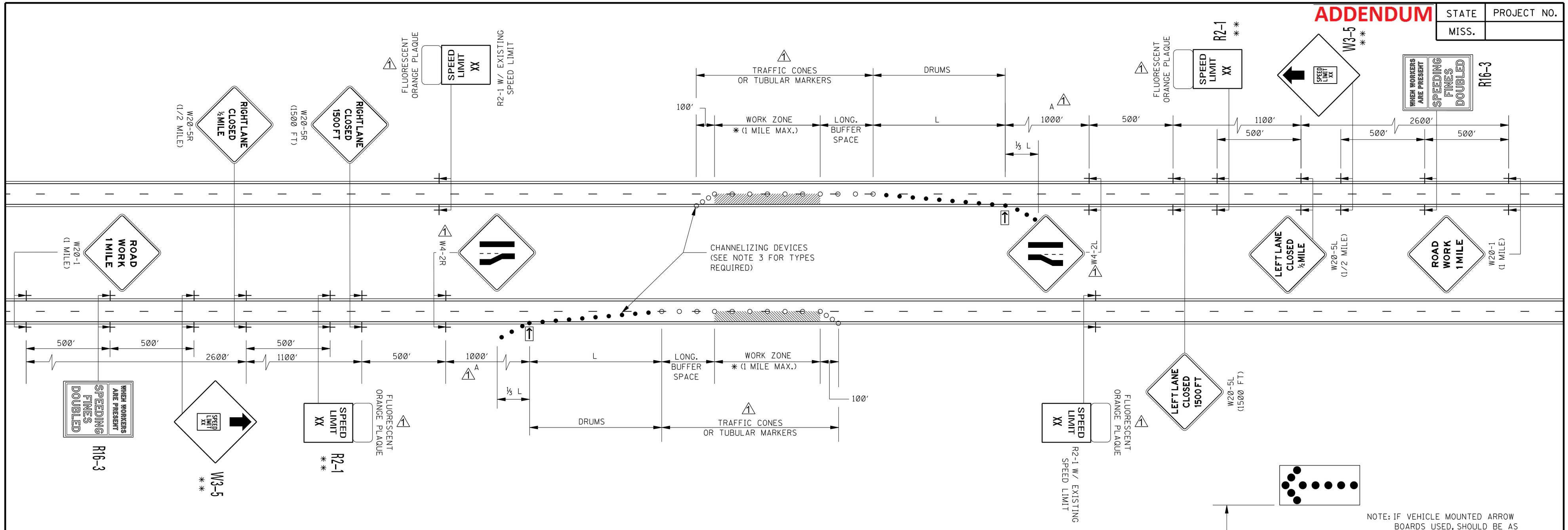

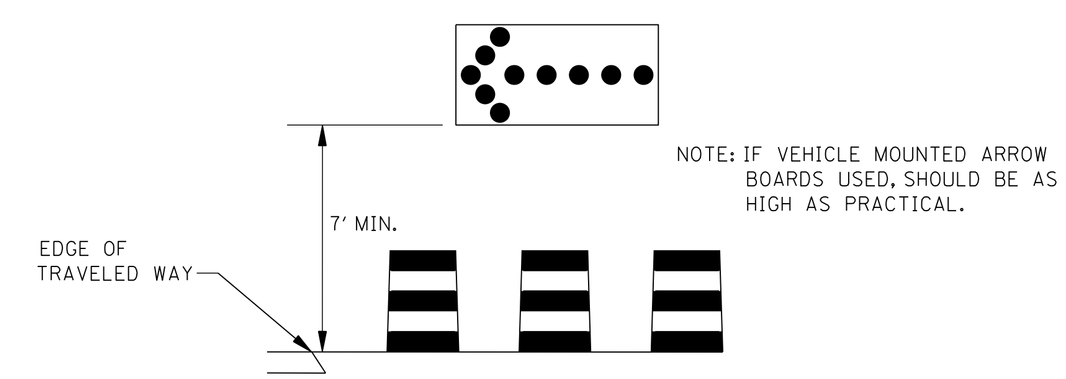

GENERAL NOTES:

1. THE LOCATION OF CHANNELIZING DEVICES AND THE WORK AREA LAYOUT SHALL BE BASED ON THE CRITERIA IN THE FOLLOWING TABLE:

POSTED SPEED AND/OR DESIGN SPEED (mph)	MAXIMUM CHANNELIZING DEVICE SPACING (ft) TAPER	MAXIMUM CHANNELIZING DEVICE SPACING (ft) ALONG LANE LINE & WORK ZONE	†† LONGITUDINAL BUFFER SPACE (ft)	△1 TAPER LENGTH † (ft)	
≤40	40	80	305	320	△1
45	45	90	360	540	△1
50	50	100	425	600	△1
55	55	110	495	660	△1
60	60	120	570	720	△1
65	65	130	645	780	△1
70	70	140	730	840	△1

△1 † NOTE: TAPER LENGTHS ARE DETERMINED USING THE FOLLOWING EQUATIONS:
$L = WS$ FOR SPEEDS OF 45 mph OR GREATER
$L = WS^2/60$ FOR SPEEDS OF 40 mph OR LESS
WHERE: L = MINIMUM LENGTH OF TAPER IN FEET
W = WIDTH OF OFFSET (USUALLY LANE WIDTH) IN FEET
S = DESIGN SPEED OR 85TH PERCENTILE SPEED IN MILES PER HOUR

†† NOTE: BUFFER SPACE MAY BE ADJUSTED AS NEEDED ACCORDING TO ROADWAY GEOMETRY TO MEET SIGHT DISTANCE REQUIREMENTS, AS DIRECTED BY THE ENGINEER.

2. FLASHING ARROW PANEL SHOULD BE AS LEVEL AS POSSIBLE AS APPROVED BY THE ENGINEER. FLASHING ARROW PANEL SHOULD BE LOCATED AT THE BEGINNING OF THE TAPER OR, IF THE SHOULDER IS TOO NARROW, BEHIND THE CHANNELIZING DEVICES IN THE CLOSED LANE.

3. CHANNELIZING DEVICE TYPES FOR:
   A. APPROACH TAPER- RETROREFLECTIVE PLASTIC DRUMS
   △1 B. ALONG LANE LINE AND WORK ZONE- RETROREFLECTIVE TRAFFIC CONES OR TUBULAR MARKERS (28″ HEIGHT MINIMUM)
   △1 C. EXIT TAPER- RETROREFLECTIVE TRAFFIC CONES OR TUBULAR MARKERS (28″ HEIGHT MINIMUM)

△1 4. WHEN WORK ZONE IS NO LONGER NEEDED, ALL SIGNS SHALL BE COVERED OR REMOVED AND THE DRUMS, OR CONES, OR TUBULAR MARKERS SHALL BE MOVED TO THE SHOULDER EDGE AT THE END OF THE WORK DAY.

5. FOR MOVING OPERATIONS (PAVING) THE CONTRACTOR SHALL HAVE TWO (2) SETS OF ADVANCE WARNING SIGNS, PLASTIC DRUMS, AND ARROW BOARD. WHEN THE CONSTRUCTION ZONE IS MOVED AHEAD, ALL SIGNS, PLASTIC DRUMS AND ARROW BOARD SHALL BE IN PLACE ON THE SECOND ZONE BEFORE REMOVING ANY SIGNS, PLASTIC DRUMS OR ARROW BOARD ON THE FIRST ZONE.

△1 6. ALL WARNING SIGNS (W SERIES) SHALL BE A MINIMUM OF 48″ X 48″. AND SHALL BE BLACK COPY ON FLUORESCENT ORANGE SHEETING.

7. ALL TRAFFIC CONTROL ITEMS SHOWN ON THIS SHEET WILL NOT BE MEASURED FOR SEPARATE PAYMENT. THIS WORK SHALL BE INCLUDED IN THE PRICE BID FOR MAINTENANCE OF TRAFFIC.

LEGEND

✱ OR AS SHOWN ELSEWHERE ON THE PLANS.

✱✱ THE SPEED ON R2-1 AND W3-5 SIGNS SHALL BE 10 MPH LESS THAN THE POSTED SPEED LIMIT UNLESS OTHERWISE DIRECTED BY COMMISSION ORDER.

⇨ FLASHING ARROW PANEL (TYPE "C")

● RETROREFLECTIVE FREE-STANDING PLASTIC DRUMS

△1 ○ TRAFFIC CONES OR TUBULAR MARKERS (28″ HEIGHT MINIMUM)

DATE	REVISION	BY
12/11/25	REVISE TEXT	STN

MISSISSIPPI DEPARTMENT OF TRANSPORTATION
ROADWAY DESIGN DIVISION
STANDARD PLAN

TRAFFIC CONTROL PLAN FOR POSTED SPEED LIMIT LESS THAN 65 MPH

(4-LANE: MEDIAN LANE OR OUTSIDE LANE CLOSURE) (WORK DAY ONLY)

ISSUE DATE: AUGUST 01, 2017

MDOT MISSISSIPPI DEPARTMENT OF TRANSPORTATION

WORKING NUMBER TCP-2

SHEET NUMBER 6352

STATE	PROJECT NO.
MISS.	

ADDENDUM

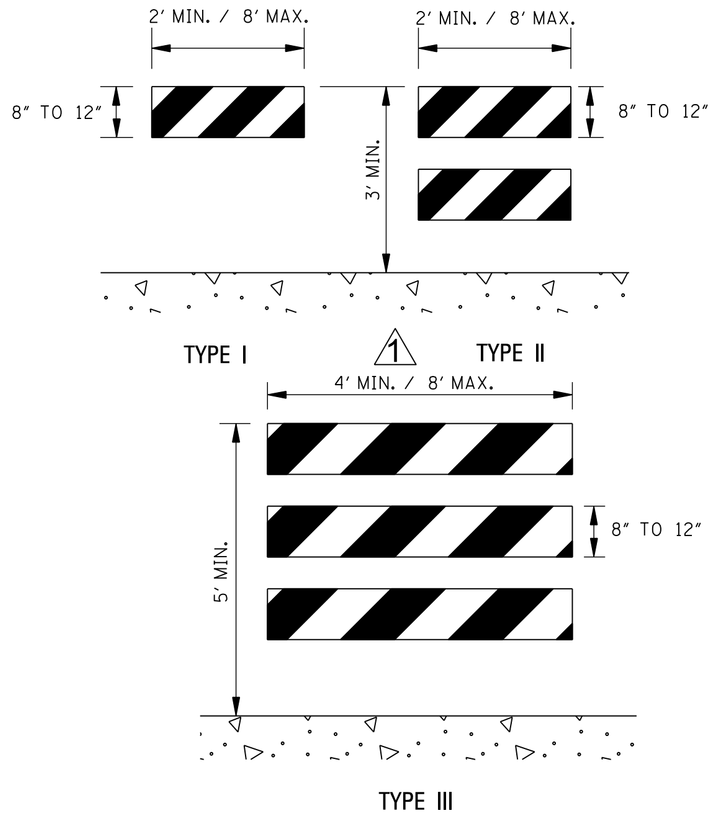

STANDARD BARRICADES

1. 1. THE RETROREFLECTIVE MARKING FOR BARRICADE RAILS SHALL BE ORANGE AND WHITE (SLOPING DOWNWARD AT AN ANGLE OF 45° IN THE DIRECTION THAT TRAFFIC IS TO PASS).
2. RAIL STRIPE SHOULD BE 6 INCHES, EXCEPT THAT 4-INCH WIDE STRIPES MAY BE USED IF RAIL LENGTHS ARE LESS THAN 36 INCHES.
3. DO NOT PLACE SANDBAGS OR OTHER DEVICES ON BARRICADE RAILS TO PROVIDE MASS SANDBAGS, HOWEVER, MAY BE PLACES AS BALLAST TO THE LOWER PARTS OF THE FRAME OR THE STAYS TO BARRICADES.
4. FOR ADDITIONAL INFORMATION OR DETAILS, SEE MUTCD, LATEST EDITION.
5. 1 BARRICADES ARE CLASSIFIED BY FHWA AS CATEGORY II WORK ZONE DEVICES. A LIST OF CRASHWORTHY BARRICADES AND OTHER CATEGORY II DEVICES CAN BE FOUND ON FHWA'S WEBSITE: http://highways.dot.gov/safety/RwD/reduce-crash-severity
6. 1 WHERE ROAD USERS INCLUDE PEDESTRIANS, THE PROVISION OF SUPPLEMENTAL AUDIBLE INFORMATION OR DETECTABLE BARRIERS OR BARRICADES SHOULD BE PROVIDED FOR PEOPLE WITH VISION DISABILITIES.
7. 1 BARRICADE RAIL SUPPORTS SHOULD NOT PROJECT INTO PEDESTRIAN CIRCULATION ROUTES MORE THAN 4 INCHES FOR THE SUPPORTS LOCATED BETWEEN 27 INCHES TO 80 INCHES ABOVE THE EXISTING SURFACE.

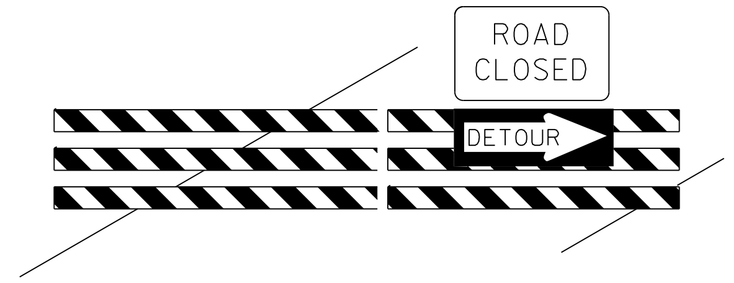

BARRICADE CLOSING A ROAD

BARRICADE CHARACTERISTICS

	I	II	III
WIDTH OF RAIL **	8" MIN. - 12" MAX.	8" MIN. - 12" MAX.	8" MIN. - 12" MAX.
LENGTH OF RAIL **	24" MIN. / 96" MAX.	24" MIN. /96" MAX.	48" MIN. / 96" MAX. 1
WIDTH OF STRIPE *	6"	6"	6"
HEIGHT	36" MIN.	36" MIN.	60" MIN.
NUMBER OF RETROREFLECTORIZED RAIL FACES	2 (ONE EACH DIRECTION)	4 (TWO EACH DIRECTION)	3 IF FACING TRAFFIC IN ONE DIRECTION 6 IF FACING TRAFFIC IN TWO DIRECTIONS

* 1. FOR RAILS LESS THAN 36" LONG, 4" WIDE STRIPES MAY BE USED.

** 2. BARRICADES INTENDED FOR USE ON EXPRESSWAYS, FREEWAYS AND OTHER HIGH SPEED ROADWAYS, SHALL HAVE A MINIMUM OF 270 in^2 OF REFLECTIVE AREA FACING TRAFFIC.

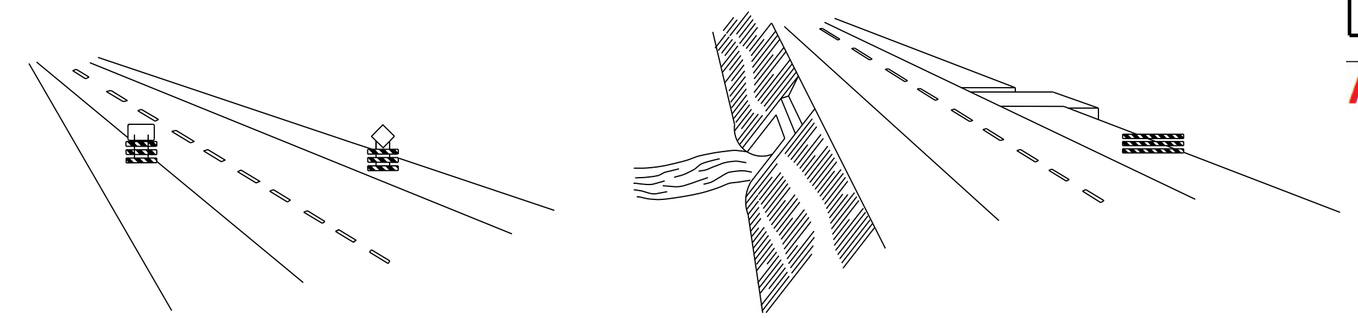

WING BARRICADES

1. WING BARRICADES ARE TYPE III BARRICADES ERECTED ON THE SHOULDER ON ONE OR BOTH SIDES OF THE PAVEMENT TO GIVE THE SENSATION OF A NARROWING OR RESTRICTED ROADWAY. WING BARRICADES MAY BE USED AS A MOUNTING FOR THE ADVANCE WARNING SIGNS OR FLASHERS.
2. WING BARRICADES SHOULD BE USED:
   A. IN ADVANCE OF A CONSTRUCTION PROJECT EVEN WHEN NO PART OF THE ROADWAY IS ACTUALLY CLOSED.
   B. IN ADVANCE OF ALL BRIDGE OR CULVERT WIDENING OPERATIONS.

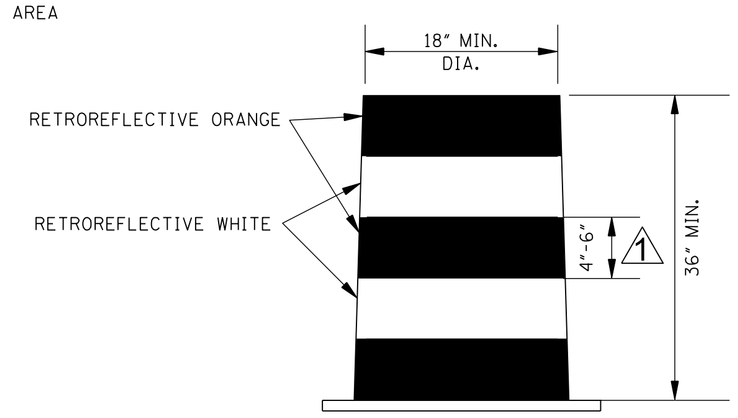

1 PLASTIC DRUM DETAIL

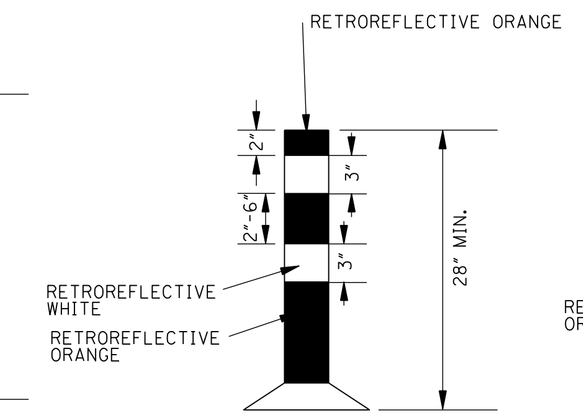

1 TUBULAR MARKER DETAIL

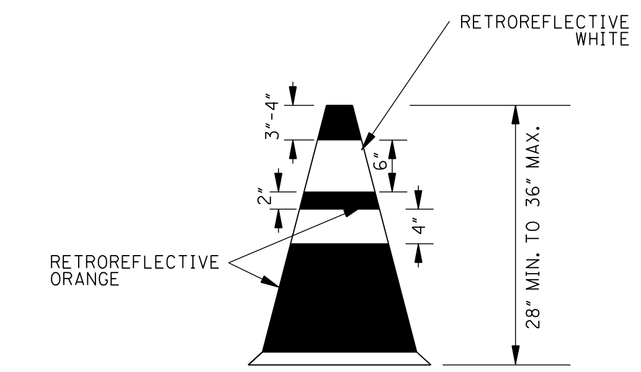

1 PLASTIC CONE DETAIL (28" – 36")

TYPE 3 OBJECT MARKER
(OM3-R)

1. TYPE 3 OBJECT MARKERS SHALL BE USED AT ALL EXPOSED BRIDGE ABUTMENTS AND AT OTHER LOCATIONS AS DEEMED NECESSARY BY THE ENGINEER.
2. THE OM3-R IS SHOWN. THE OM3-L IS SIMILAR EXCEPT THE STRIPES SLOPE DOWNWARD FROM THE UPPER LEFT SIDE TO THE LOWER RIGHT SIDE AND SHALL BE PLACED ON THE LEFT SIDE OF THE OBJECT.
3. THE INSIDE EDGE OF THE MARKER SHALL BE IN LINE WITH THE INNER EDGE OF THE OBSTRUCTION.
4. 1 THE STRIPING SHALL CONSIST OF ALTERNATING BLACK AND RETOREFLECTIVE YELLOW SLOPING DOWNWARD TOWARD THE SIDE ON WHICH TRAFFIC IS THE PASS.

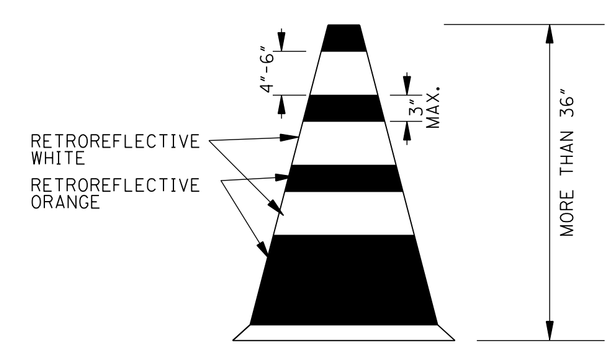

1 PLASTIC CONE DETAIL (36" OR GREATER)

1. 1. PLASTIC DRUMS, TUBULAR MARKERS, OR PLASTIC CONES SHALL BE ON END AND USED AS AN EXPEDIENT METHOD FOR TRAFFIC CHANNELIZATION. THE COLOR AND MARKING OF THE DEVICE USED SHALL BE CONSISTENT WITH MARKING STANDARDS FOR BARRICADE. THE PREDOMINANT COLOR ON THE DEVICE USED SHALL BE ORANGE WITH RETROREFLECTIVE, HORIZONTAL, CIRCUMFERENTIAL WHITE STRIPES AS SHOWN ON THE DETAILS.
2. 1 DRUMS, TUBULAR MARKERS, OR PLASTIC CONES SHOULD NEVER BE PLACED IN THE ROADWAY WITHOUT WARNING SIGNS.
3. 1 WHERE PRACTICAL PLASTIC DRUMS, TUBULAR MARKERS, OR PLASTIC CONES SHOULD BE PLACED NO CLOSER THAN 3'-0" FROM THE EDGE OF TRAVELED LANE.
4. BALLAST SHALL NOT BE PLACED ON THE TOP OF THE DRUM.

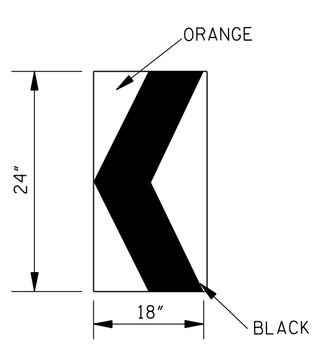

1 RETROREFLECTIVE CHEVRON ALIGNMENT SIGN DETAIL
(W1–8)

1. A CHEVRON SIGN CONSISTS OF A BLACK CHEVRON TYPE MARKING ON AN ORANGE BACKGROUND AND SHALL POINT IN THE DIRECTION OF TRAFFIC FLOW.
2. THE CHEVRON SIGN SHALL BE MOUNTED ON CRASHWORTHY SUPPORT.
3. CHEVRON SIGNS MAY BE USED TO SUPPLEMENT OTHER STANDARD DEVICES WHERE ONE OR MORE LANES ARE CLOSED FOR CONSTRUCTION OR MAINTENANCE. THEY SHOULD BE PLACED APPROXIMATELY 2'-0" BEHIND THE LANE TRANSITION STRIPE.
4. CHEVRON SIGNS SHALL BE INSTALLED AT A MINIMUM HEIGHT OF 4 FEET MEASURED VERTICALLY FROM THE BOTTOM OF THE SIGN TO THE ELEVATION OF THE NEAR EDGE OF THE TRAVELWAY.

DATE	REVISION	BY
12/11/25	REVISED TEXT AND DETAILS.	STN

MISSISSIPPI DEPARTMENT OF TRANSPORTATION
ROADWAY DESIGN DIVISION
STANDARD PLAN

HIGHWAY SIGN AND BARRICADE DETAILS FOR CONSTRUCTION PROJECTS

MDOT MISSISSIPPI DEPARTMENT OF TRANSPORTATION

WORKING NUMBER TCP-8

ISSUE DATE: AUGUST 01, 2017

SHEET NUMBER 6358

STATE	PROJECT NO.
MISS.	

ADDENDUM

MOBILE OPERATIONS ON MULTILANE ROAD

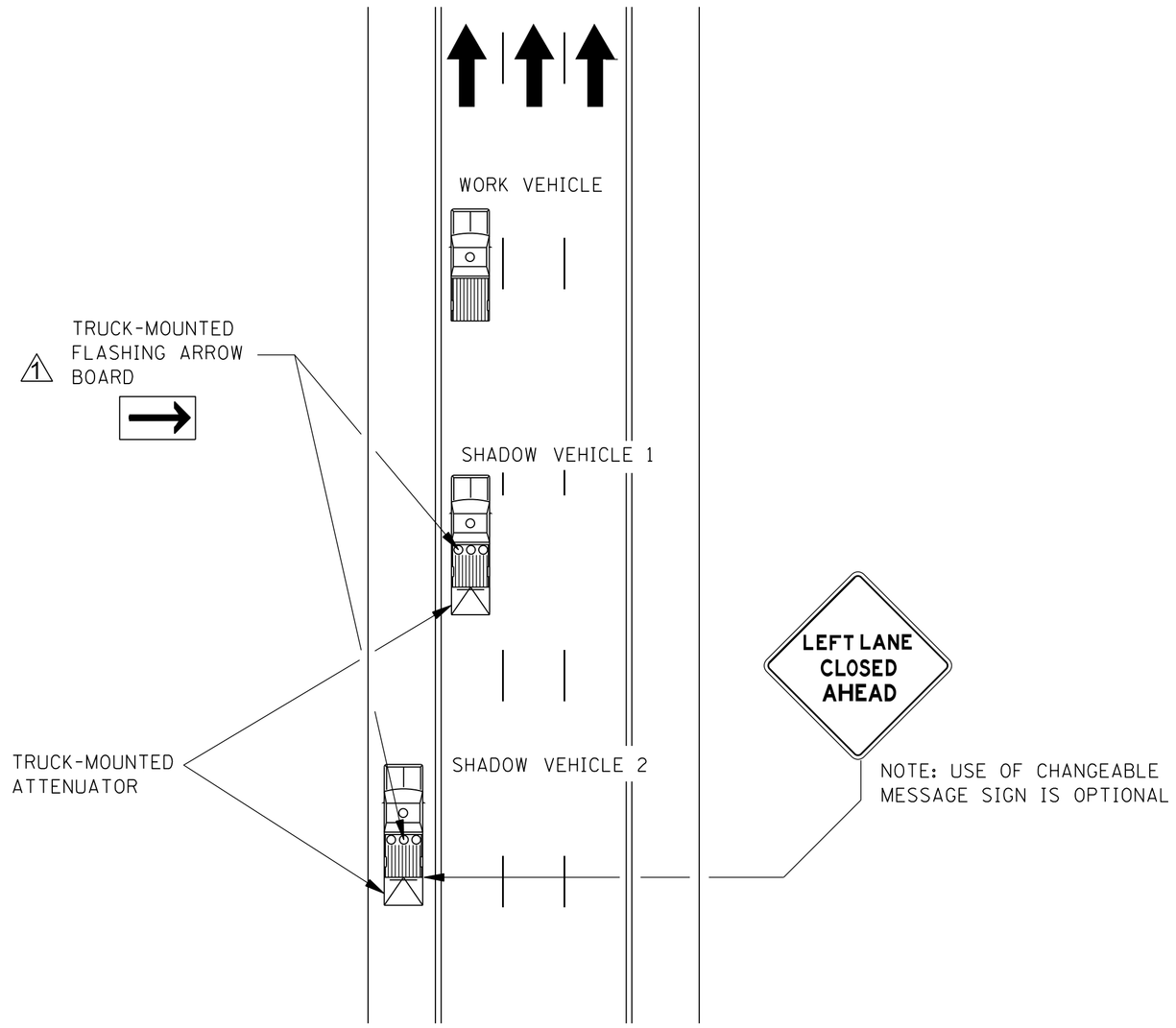

MOBILE OPERATIONS ON MULTILANE ROAD

MOBILE OPERATIONS ON TWO–LANE ROAD

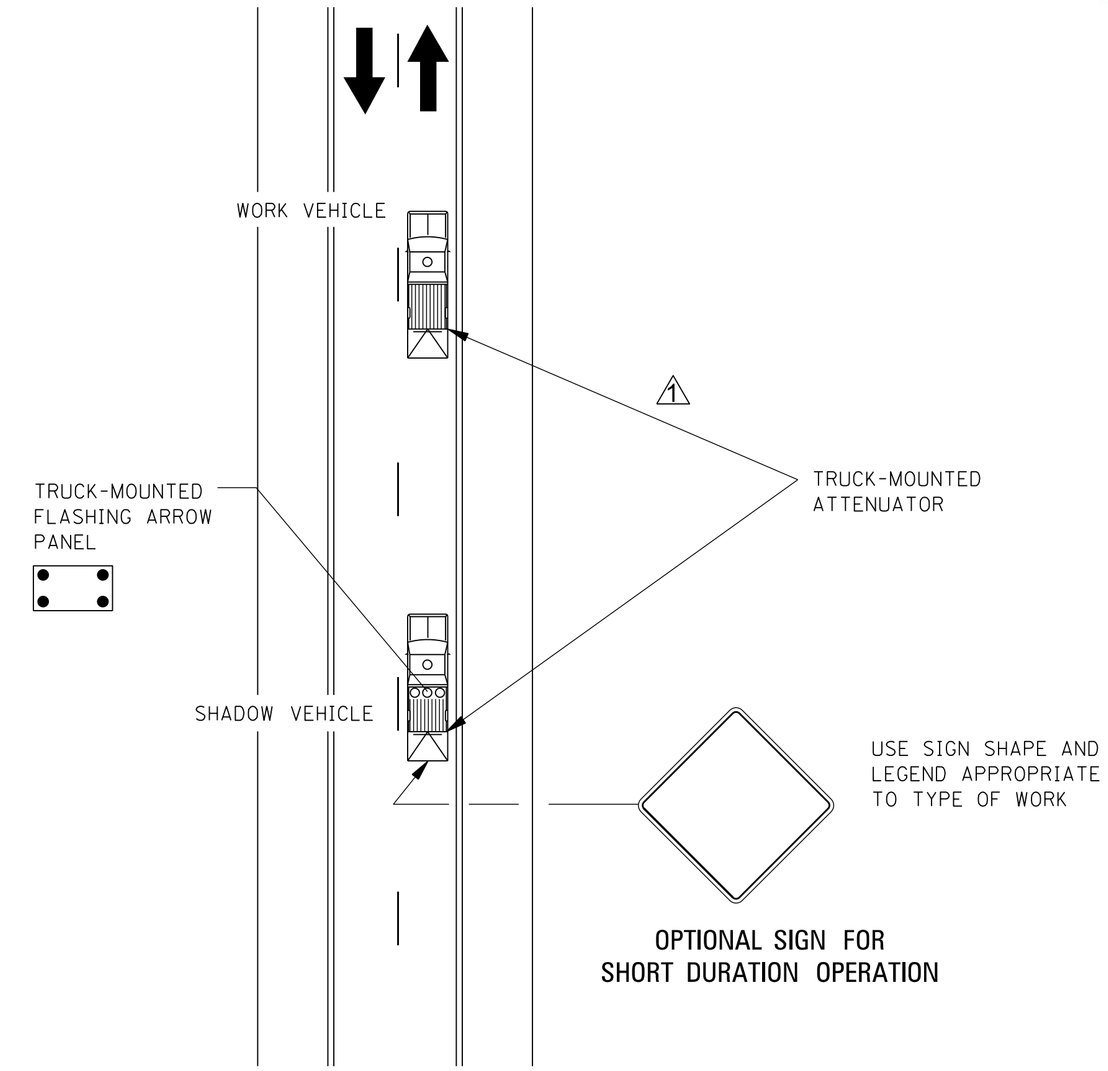

OPTIONAL SIGN FOR SHORT DURATION OPERATION

MOBILE OPERATIONS ON TWO–LANE ROAD

NOTES FOR MULTILANE LANE OPERATION:

1. SHADOW AND WORK VEHICLES SHALL DISPLAY HIGH-INTENSITY ROTATING, FLASHING, OSCILLATING, OR STROBE LIGHTS. AN ARROW BOARD SHALL BE USED WHEN A FREEWAY LANE IS CLOSED. WHEN MORE THAN ONE FREEWAY LANE IS CLOSED, A SEPARATE ARROW BOARD SHALL BE USED FOR EACH CLOSED LANE.
2. SHADOW VEHICLE 2 SHOULD BE EQUIPPED WITH AN ARROW BOARD AND TRUCK MOUNTED ATTENUATOR (TMA), AN APPROPRIATE LANE CLOSURE SIGN SHOULD BE PLACED ON SHADOW VEHICLE 2 SO AS NOT TO OBSCURE THE ARROW BOARD.
3. SHADOW VEHICLE 1 SHOULD BE EQUIPPED WITH AN ARROW BOARD AND TRUCK-MOUNTED ATTENUATOR (TMA).
4. SHADOW VEHICLE 2 SHOULD TRAVEL AT A VARYING DISTANCE FROM THE WORK OPERATION SO AS TO PROVIDE ADEQUATE SIGHT DISTANCE FOR TRAFFIC APPROACHING FROM THE REAR.
5. THE SPACING BETWEEN THE WORK VEHICLES AND THE SHADOW VEHICLES, AND BETWEEN EACH SHADOW VEHICLE, SHOULD BE MINIMIZED TO DETER ROAD USERS FROM DRIVING IN BETWEEN.
6. ON HIGH-SPEED ROADWAYS, A THIRD SHADOW VEHICLE (NOT SHOWN) MAY BE USED WITH SHADOW VEHICLE 1 IN THE CLOSED LANE, SHADOW VEHICLE 2 STRADDLING THE EDGE LINE, AND SHADOW VEHICLE 3 ON THE SHOULDER.
7. ARROW BOARD SHALL BE AS A MINIMUM TYPE B, 60" X 30" IN ACCORDANCE WITH THE CRITERIA PRESENTED IN THE MUTCD.
8. WORK SHOULD NORMALLY BE DONE DURING OFF-PEAK HOURS.
9. VEHICLE-MOUNTED SIGNS SHOULD BE MOUNTED WITH THE BOTTOM OF THE SIGN LOCATED AT A MINIMUM HEIGHT OF 48" ABOVE THE PAVEMENT AND SHALL NOT BE OBSCURED BY EQUIPMENT OR SUPPLIES. SIGN LEGENDS SHALL BE COVERED OR TURNED FROM VIEW WHEN WORK IS NOT IN PROGRESS.
10. WHEN THE WORK VEHICLE OCCUPIES AN INTERIOR LANE (A LANE OTHER THAN THE FAR RIGHT OR FAR LEFT) OF A DIRECTIONAL ROADWAY HAVING A RIGHT-HAND SHOULDER 10 FEET OR MORE IN WIDTH, SHADOW VEHICLE 2 SHOULD DRIVE ON THE RIGHT-HAND SHOULDER WITH A SIGN INDICATING THAT WORK IS TAKING PLACE IN THE INTERIOR LANE.
11. ON HIGH-SPEED ROADWAYS, A THIRD SHADOW VEHICLE (NOT SHOWN) MAY BE USED WITH SHADOW VEHICLE 1 IN THE CLOSED LANE, SHADOW VEHICLE 2 STRADDLING THE EDGE LINE, AND SHADOW VEHICLE 3 ON THE SHOULDER.
12. WHERE ADEQUATE SHOULDER WIDTH IS NOT AVAILABLE, SHADOW VEHICLE 3 MAY ALSO STRADDLE THE EDGE LINE.
13. ALL TRAFFIC CONTROL ITEMS SHOWN ON THIS SHEET WILL NOT BE MEASURED FOR SEPARATE PAYMENT. THIS WORK SHALL BE INCLUDED IN THE PRICE BID FOR MAINTENANCE OF TRAFFIC.

NOTES FOR TWO-LANE OPERATION:

1. WHERE PRACTICAL AND WHEN NEEDED, THE WORK AND SHADOW VEHICLES SHOULD PULL OVER PERIODICALLY TO ALLOW TRAFFIC TO PASS. IF THIS CAN NOT BE DONE FREQUENTLY, AS AN ALTERNATIVE, A "DO NOT PASS" SIGN MAY BE PLACED ON THE REAR OF THE VEHICLE BLOCKING THE LANE.
2. THE DISTANCE BETWEEN THE WORK AND SHADOW VEHICLES MAY VARY ACCORDING TO TERRAIN, PAINT DRYING TIME, AND OTHER FACTORS. SHADOW VEHICLES ARE USED TO WARN TRAFFIC OF THE OPERATION AHEAD. WHENEVER ADEQUATE STOPPING SIGHT DISTANCE EXISTS TO THE REAR, THE SHADOW VEHICLE SHOULD MAINTAIN THE MINIMUM DISTANCE AND PROCEED AT THE SAME SPEED AS THE WORK VEHICLE. THE SHADOW VEHICLE SHOULD SLOW DOWN IN ADVANCE OF VERTICAL OR HORIZONTAL CURVES THAT RESTRICT SIGHT DISTANCE.
3. ADDITIONAL SHADOW VEHICLES TO WARN AND REDUCE THE SPEED OF ONCOMING OR OPPOSING TRAFFIC MAY BE USED. POLICE PATROL CARS MAY BE USED FOR THIS PURPOSE.
4. A TRUCK-MOUNTED ATTENUATOR (TMA) SHOULD BE USED ON THE SHADOW VEHICLE AND MAY BE USED ON THE WORK VEHICLE.
5. THE WORK VEHICLE SHALL BE EQUIPPED WITH BEACONS, AND THE SHADOW VEHICLES SHALL BE EQUIPPED WITH TWO HIGH-INTENSITY FLASHING LIGHTS MOUNTED ON THE REAR, ADJACENT TO THE SIGN. SHADOW AND WORK VEHICLES SHALL DISPLAY FLASHING OR ROTATING BEACONS BOTH FORWARD AND TO THE REAR.
6. VEHICLE-MOUNTED SIGNS SHOULD BE MOUNTED WITH THE BOTTOM OF THE SIGN LOCATED AT A MINIMUM HEIGHT OF 48" ABOVE THE PAVEMENT AND SHALL NOT BE OBSCURED BY EQUIPMENT OR SUPPLIES. SIGN LEGENDS SHALL BE COVERED OR TURNED FROM VIEW WHEN WORK IS NOT IN PROGRESS.
7. ARROW BOARD TO BE USED IN CAUTION MODE.
8. ALL TRAFFIC CONTROL ITEMS SHOWN ON THIS SHEET WILL NOT BE MEASURED FOR SEPARATE PAYMENT. THIS WORK SHALL BE INCLUDED IN THE PRICE BID FOR MAINTENANCE OF TRAFFIC.

DATE	REVISION	BY
12/11/25	REVISED TEXT AND DETAILS.	STN

MISSISSIPPI DEPARTMENT OF TRANSPORTATION
ROADWAY DESIGN DIVISION
STANDARD PLAN

TRAFFIC CONTROL PLAN
MOBILE OPERATIONS
MULTILANE ROADS
AND
TWO–LANE ROADS

MDOT MISSISSIPPI DEPARTMENT OF TRANSPORTATION

WORKING NUMBER TCP-9

ISSUE DATE: AUGUST 01, 2017

SHEET NUMBER 6359

STATE	PROJECT NO.
MISS.	

ADDENDUM

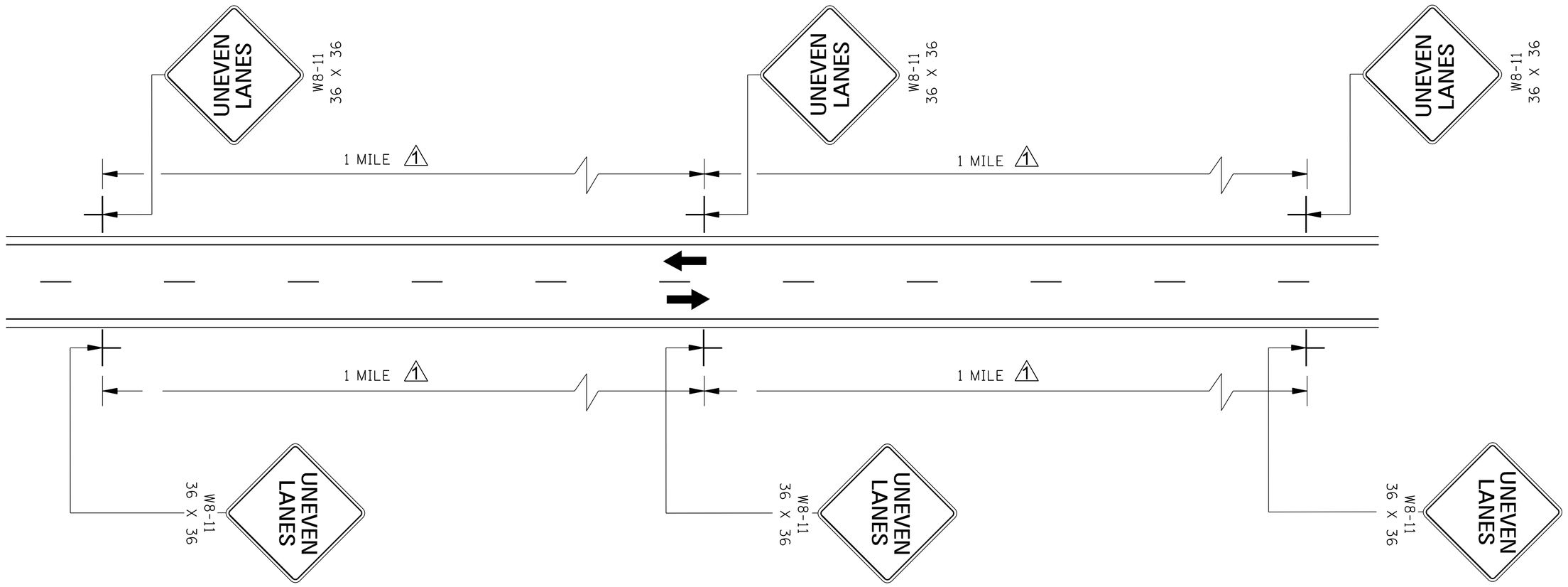

TWO–WAY TRAFFIC

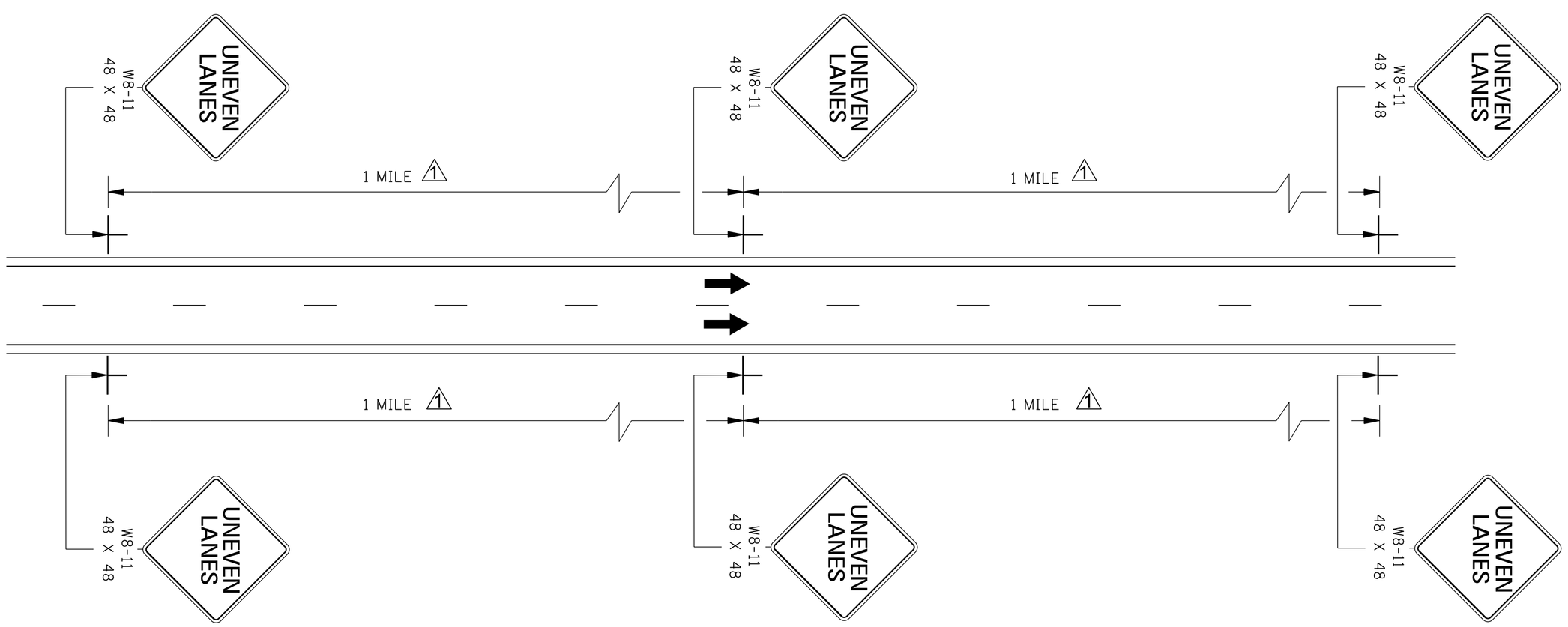

ONE–WAY TRAFFIC

GENERAL NOTES:

1. UNEVEN LANE LINE:
   A. IF LESS THAN OR EQUAL TO 1½", NO SIGNS REQUIRED.
   B. IF GREATER THAN 1½" AND LESS THAN OR EQUAL TO 2¼", PLACE SIGNS AS SHOWN ON THIS SHEET.
   C. IF GREATER THAN 2¼", TRAFFIC SHOULD NOT BE ALLOWED TO CROSS UNEVEN LANE LINE.
2. THE W8-11 SIGNS SHOULD BE SPACED AT 1 MILE INTERVALS THROUGHOUT UNEVEN LANE LINE LIMITS.
3. ALL TRAFFIC CONTROL ITEMS SHOWN ON THIS SHEET SHALL BE PAID FOR UNDER MAINTENANCE OF TRAFFIC.
4. SIGNS SHALL BE RETROREFLECTIVE WITH ORANGE BACKGROUND/BLACK COPY.

DATE	REVISION	BY
12/11/25	REVISED TEXT	STN

MISSISSIPPI DEPARTMENT OF TRANSPORTATION
ROADWAY DESIGN DIVISION
STANDARD PLAN

TRAFFIC CONTROL PLANS
UNEVEN PAVEMENT
DETAILS

MDOT MISSISSIPPI DEPARTMENT OF TRANSPORTATION

WORKING NUMBER
TCP-12

ISSUE DATE: AUGUST 01, 2017

SHEET NUMBER
6362

STATE	PROJECT NO.
MISS.	

ADDENDUM

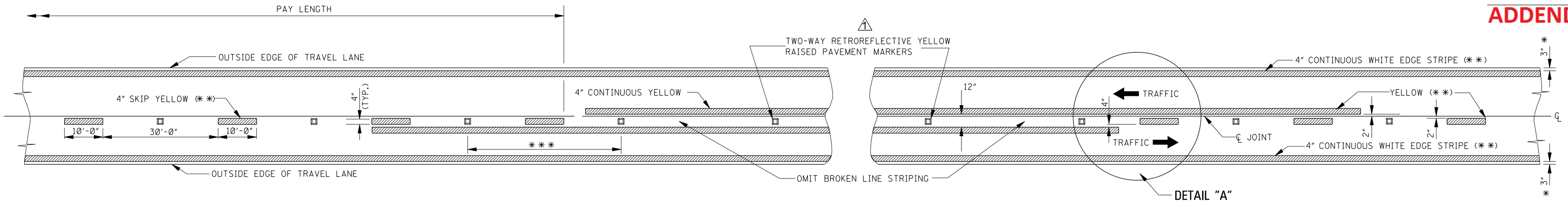

TWO–WAY TRAFFIC
(ASPHALT OR CONCRETE PAVEMENT)

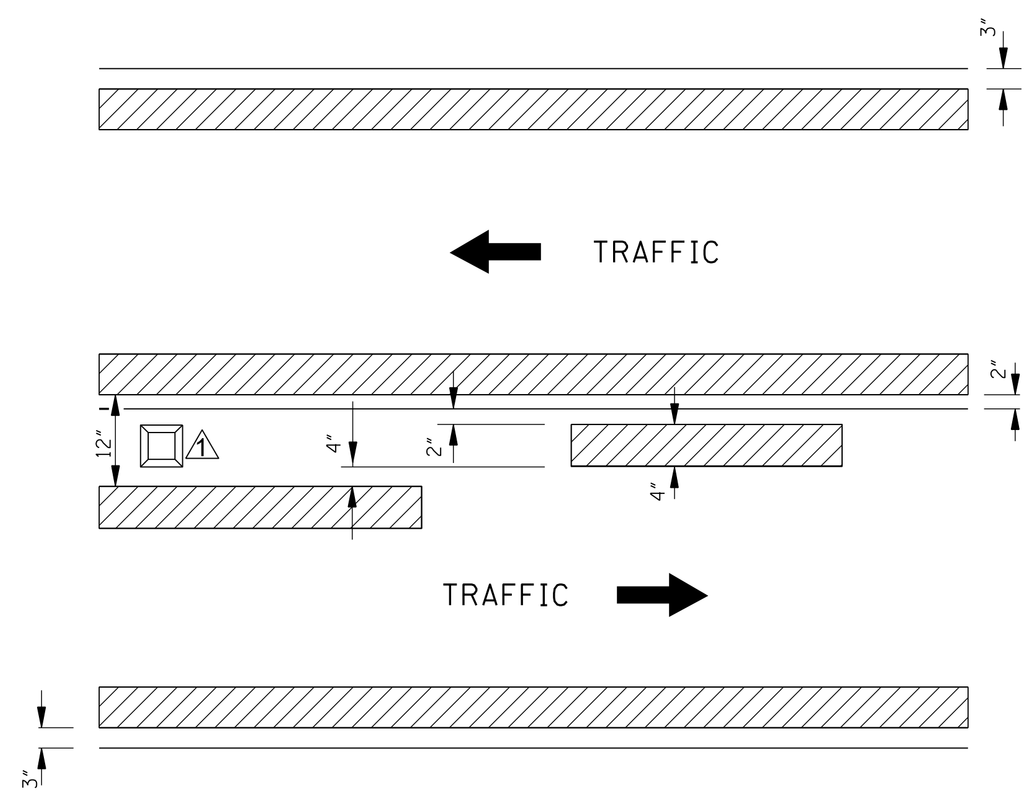

DETAIL "A"

DIRECTION OF TRAFFIC

GENERAL NOTES:

✱ 1. 3" UNLESS SHOWN ELSEWHERE ON THE PLANS.

✱✱ 2. EDGE STRIPE SHALL BE SAME MATERIAL AS LANE-LINE STRIPE (PAINT OR TAPE AS INDICATED IN PAY ITEMS).

△1 3. RETROREFLECTIVE RAISED PAVEMENT MARKERS TO BE USED IF TEMPORARY MARKINGS ARE TO REMAIN IN PLACE OVER 3 MONTHS

△1✱✱✱ 4. SPACING OF RETROREFLECTIVE RAISED PAVEMENT MARKERS IS AS FOLLOWS:

	URBAN AREA (ft-in)	RURAL AREA (ft-in)
TANGENT SECTIONS	40'-0"	80'-0"
HORIZONTAL CURVES	40'-0"	40'-0"
INTERCHANGE LIMITS	40'-0"	† 40'-0"

△1† NOTE: ON THE MAIN FACILITY, RETROREFLECTIVE RED-CLEAR RAISED PAVEMENT MARKERS ON A 40'-0" SPACING WILL BE REQUIRED ON LANE-LINE(S) THROUGH ALL INTERCHANGE AREAS BEGINNING 1000' IN ADVANCE (IN DIRECTION OF TRAFFIC) OF THE EXIT RAMP TAPER AND CONTINUING THROUGH THE INTERCHANGE TO THE END OF THE ENTRANCE RAMP TAPER.

△1 5. PAVEMENT MARKERS SHALL BE HIGH PERFORMANCE RETROREFLECTIVE RAISED PAVEMENT MARKERS FROM THE MDOT "APPROVED PRODUCTS LIST".

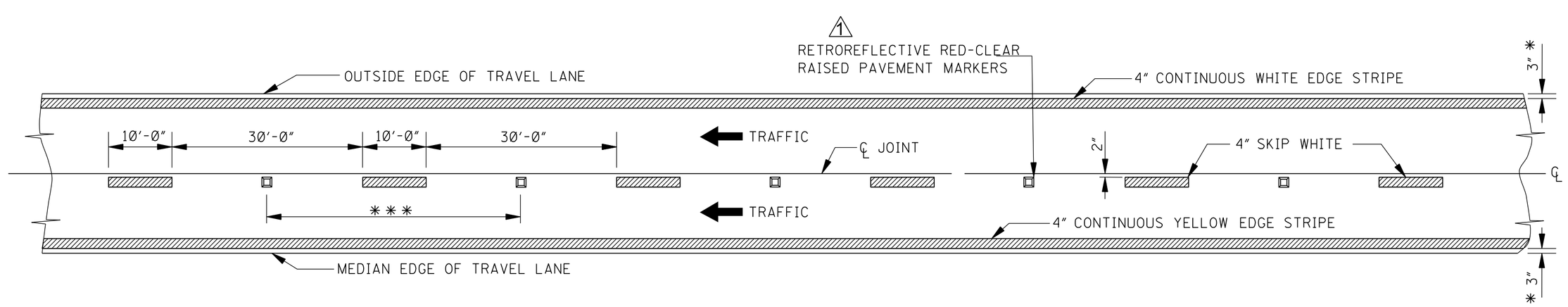

4–LANE WITH ONE–WAY TRAFFIC

DATE	REVISION	BY
12/11/25	REVISED TEXT	STN

MISSISSIPPI DEPARTMENT OF TRANSPORTATION
ROADWAY DESIGN DIVISION
STANDARD PLAN

TEMPORARY STRIPING FOR TRAFFIC CONTROL 2–LANE AND 4–LANE DIVIDED HIGHWAYS

MDOT MISSISSIPPI DEPARTMENT OF TRANSPORTATION

WORKING NUMBER TCP-13

ISSUE DATE: AUGUST 01, 2017

SHEET NUMBER 6363

STATE	PROJECT NO.
MISS.	

ADDENDUM

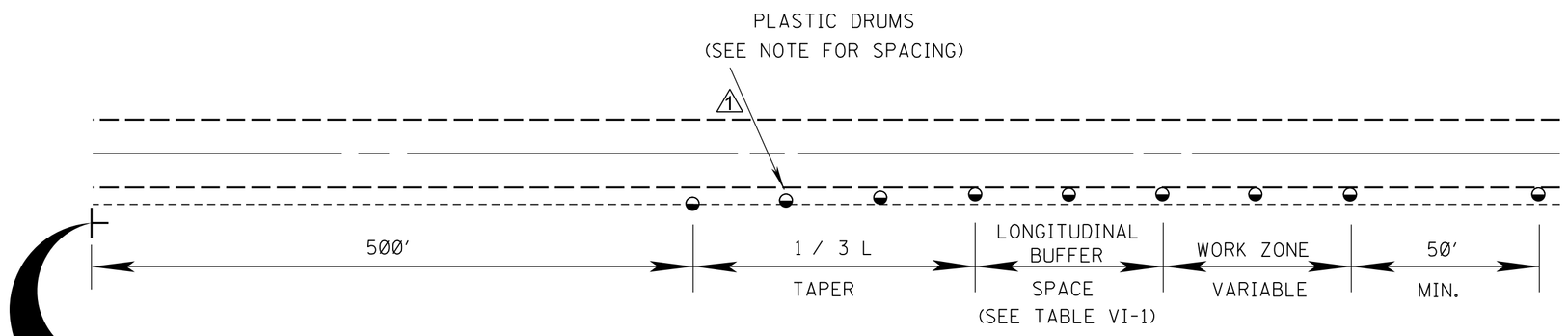

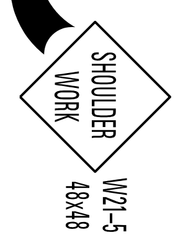

TYPICAL SHOULDER CLOSURE

(1) TO BE USED WITH EIGHT (8) FOOT OR GREATER WIDTH IMPROVED SHOULDER.
(2) TO BE USED WHEN CONSTRUCTION VEHICLES (EQUIPMENT) ENCROACHES ON OR WITHIN TWO (2) FEET OF THE SHOULDER BREAK.
△1 (3) FOR SHORT DURATION OPERATIONS OF 60 MINUTES OR LESS, ALL SIGNS AND CHANNELIZING DEVICES MAY BE ELIMINATED IF A VEHICLE WITH ACTIVATED HIGH-INTENSITY ROTATING, FLASHING, OSCILLATING, OR STROBE LIGHTS IS USED.

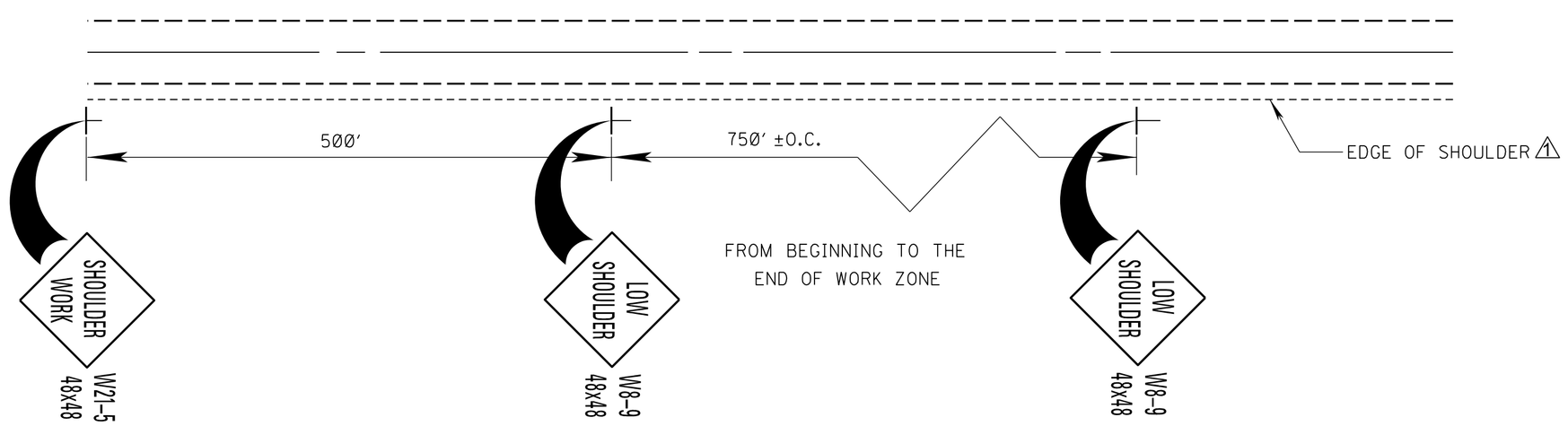

TYPICAL SHOULDER WORK #1
(SEE NOTE A–1 THIS SHEET)

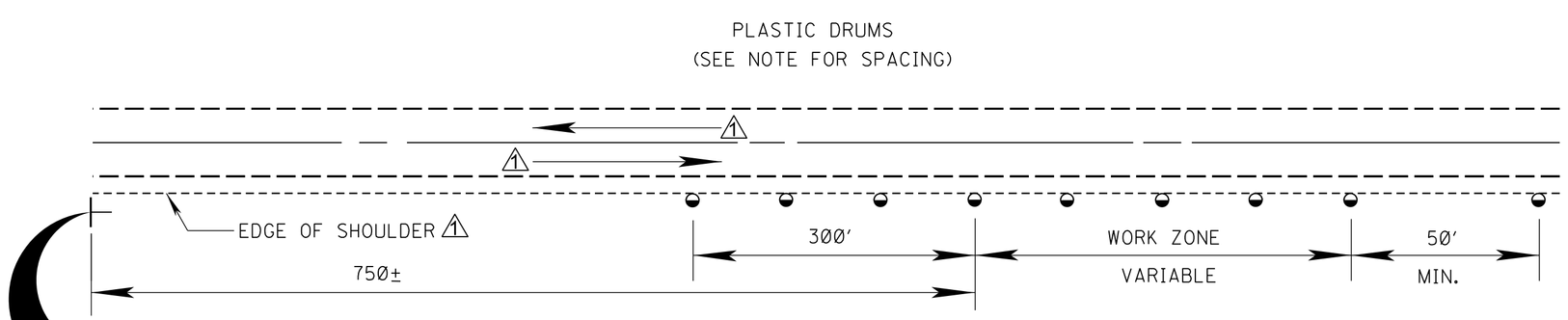

OR

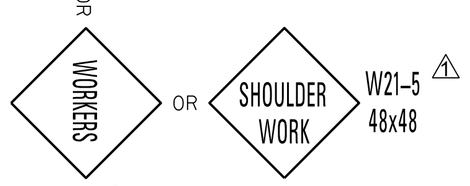

TYPICAL SHOULDER WORK #2

NOTE:
WORK OUTSIDE TWO (2) FOOT AND WITHIN TEN (10) FEET OF THE SHOULDER BREAK MAY BE PROTECTED BY PLACING DRUMS ALONG THE SHOULDER EDGE, 300 FEET PRIOR TO AND 50 FEET BEYOND THE WORK AREA, OR SEE NOTE A-3 THIS SHEET.

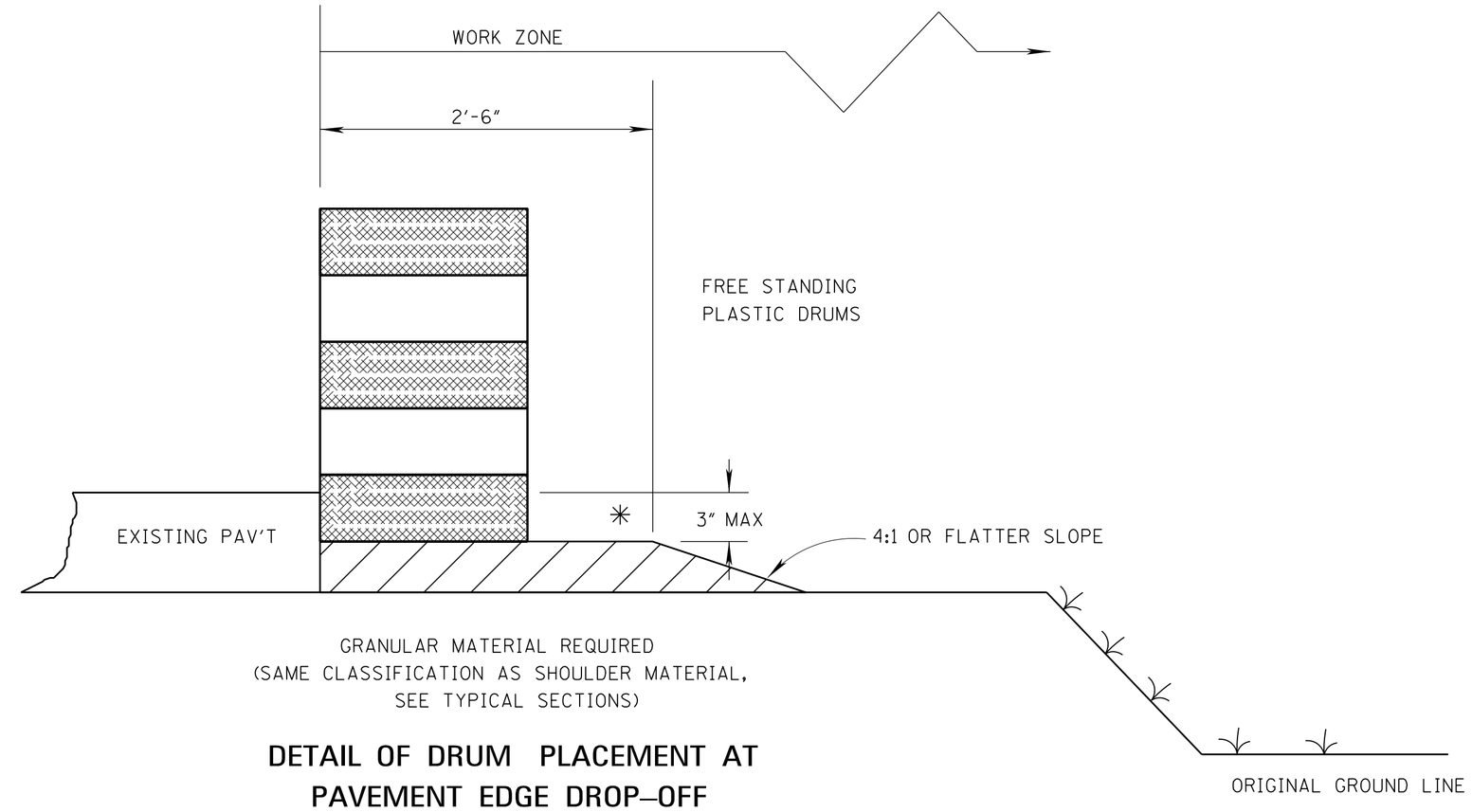

DETAIL OF DRUM PLACEMENT AT PAVEMENT EDGE DROP–OFF

NOTES:

✳ A. PAVEMENT EDGE DROP-OFF

1. IF LESS THAN TWO AND ONE QUARTER (2.25) INCHES-NO PROTECTION REQUIRED. PLACE A SHOULDER WORK SIGN (W21-5) 500 FEET IN ADVANCE OF WORK ZONE SHOULDER AND A LOW SHOULDER SIGN (W8-9) AT THE BEGINNING AND THROUGHOUT THE WORK ZONE @ (750′+O.C.).

△1 2. TWO AND ONE QUARTER TO THREE INCHES-PLACE DRUMS, VERTICAL PANELS OR BARRICADES EVERY 100 FEET ON TANGENT SECTIONS FOR SPEEDS OF 50 MILES PER HOUR OR GREATER. CONES MAY BE USED IN PLACE OF DRUMS, PANELS, AND BARRICADES DURING DAYLIGHT HOURS. FOR TANGENT SECTIONS WITH SPEEDS LESS THAN 50 MILES PER HOUR AND FOR CURVES, DEVICES SHOULD BE PLACED EVERY 50 FEET. SPACING FOR TAPERS SHOULD BE IN ACCORDANCE WITH THE MUTCD (1 / 3 L, WHERE L IS THE TAPER LENGTH IN FEET.)

3. GREATER THAN THREE (3) INCHES-POSITIVE SEPARATION OR WEDGE WITH 4:1 OR FLATTER SLOPE NEEDED. IF THERE IS EIGHT (8) FEET OR MORE DISTANCE BETWEEN THE EDGE OF TRAVEL LANE AND DROP-OFF, THEN DRUMS, PANELS OR BARRICADES MAY BE USED.

4. FOR TEMPORARY CONDITIONS, DROP-OFFS GREATER THAN THREE (3) INCHES MAY BE PROTECTED WITH DRUMS, VERTICAL PANELS OR BARRICADES FOR SHORT DISTANCES DURING DAYLIGHT HOURS WHILE WORK IS BEING DONE IN THE DROP-OFF AREA.

5. LESSER TREATMENTS THAN THOSE DESCRIBED ABOVE MAY BE CONSIDERED FOR LOW-VOLUME LOCAL STREETS.

△1 B. DRUM, VERTICAL PANEL, OR BARRICADE SPACING

1. TANGENTS = 2 X S
2. TAPERS = L / 3
   WHERE L = S X W
   L = TAPER LENGTH IN FEET
△1 S = SPEED IN MPH (POSTED OR ANTICIPATED OPERATING SPEED)
   W = WIDTH OF OFFSET IN FEET

C. ALL TRAFFIC CONTROL ITEMS SHOWN ON THIS SHEET SHALL BE PAID FOR UNDER MAINTENANCE OF TRAFFIC.

TABLE VI-1. GUIDELINES FOR LENGTH OF LONGITUDINAL BUFFER SPACE

✳✳ SPEED (MPH)	LENGTH (FEET)	
20	115	△1
25	155	△1
30	200	△1
35	250	△1
40	305	△1
45	360	△1
50	425	△1
55	495	△1
60	570	△1
65	645	△1

✳✳ POSTED SPEED, OFF-PEAK 85 PERCENTILE SPEED PRIOR TO WORK STARTING, OR THE ANTICIPATED OPERATING SPEED IN MPH.

DATE	REVISION	BY
12/11/25	REVISED TEXT	STN

MISSISSIPPI DEPARTMENT OF TRANSPORTATION
ROADWAY DESIGN DIVISION
STANDARD PLAN

TRAFFIC CONTROL DETAILS DRUM PLACEMENT AND SHOULDER CLOSURE

MDOT MISSISSIPPI DEPARTMENT OF TRANSPORTATION

WORKING NUMBER TCP-16

ISSUE DATE: AUGUST 01, 2017

SHEET NUMBER 6366