SECTION 905 -- PROPOSAL (CONTINUED)

I (We) hereby certify by digital signature and electronic submission via Bid Express of the Section 905 proposal below, that all certifications, disclosures and affidavits incorporated herein are deemed to be duly executed in the aggregate, fully enforceable and binding upon delivery of the bid proposal. I (We) further acknowledge that this certification shall not extend to the bid bond or alternate security which must be separately executed for the benefit of the Commission. This signature does not cure deficiencies in any required certifications, disclosures and/or affidavits. I (We) also acknowledge the right of the Commission to require full and final execution on any certification, disclosure or affidavit contained in the proposal at the Commission's election upon award. Failure to so execute at the Commission's request within the time allowed in the Standard Specifications for execution of all contract documents will result in forfeiture of the bid bond or alternate security.

Bidder acknowledges receipt of and has added to and made a part of the proposal and contract documents the following addendum (addenda):

ADDENDUM NO.	1	DATED	1/20/2026	ADDENDUM NO.		DATED	
ADDENDUM NO		DATED		ADDENDUM NO.		DATED	
ADDENDUM NO		DATED		ADDENDUM NO.		DATED	

Number	Description
1	Revised Table of Contents; Removed NTB No. 5750; Revised Notice To Bidders No. 7554; Added NTB No. 7557; Revised Wage Rates; Removed Progress Schedule; Revised Plan Sheet Nos. REV-1, 6, 6051, 6351, 6354 - 6355, 6358 - 6360, 6363, and 6366; Amendment EBSx Download Required.

TOTAL ADDENDA: 1
(Must agree with total addenda issued prior to opening of bids)

Respectfully Submitted,

DATE _____

_____
Contractor

BY _____
Signature

TITLE _____

ADDRESS _____

CITY, STATE, ZIP _____

PHONE _____

FAX _____

E-MAIL _____

(To be filled in if a corporation)

Our corporation is chartered under the Laws of the State of _____ and the names, titles and business addresses of the executives are as follows:

_____
President Address

_____
Secretary Address

_____
Treasurer Address

The following is my (our) itemized proposal.

STBG-0040-03(028)/ 110034301000

Tishomingo County(ies)

Revised 01/26/2016

For Informational Purposes Only

MISSISSIPPI DEPARTMENT OF TRANSPORTATION
TABLE OF CONTENTS

PROJECT: STBG-0040-03(028)/110034301 - Tishomingo

Section 901 - Advertisement

Section 904 - Notice to Bidders

#1	Governing Specification, w/ Supplement
#2	Status of ROW, w/ Attachments
#3	Final Cleanup
#296	Reduced Speed Limit Signs
#445	Mississippi Agent or Qualified Nonresident Agent
#516	Errata and Modifications to the 2017 Standard Specifications
#1225	Early Notice to Proceed
#1226	Material Storage Under Bridges
#1241	Fuel and Material Adjustments
#2206	MASH Compliant Devices
#2273	Mississippi Special Fuel Tax Law
#2954	Reflective Sheeting for Signs
#4113	Unique Entity ID Requirement For Federal Funded Projects
#4702	App for Traffic Control Report
#5551	Federal Bridge Formula
#5570	Special Provisions Related to Concrete
#7554	Contract Time
#7556	Additional Pay Item
#7557	Milestone Date
#7578	Obligation Date

906 Required Federal Contract Provisions -- FHWA 1273, w/Supplements

Section 907 - Special Provisions

907-101-1	Definitions and Terms
907-102-2	Bidding Requirements and Conditions
907-104-2	Minor Alterations to the Contract
907-105-2	Control of Work
907-106-4	Control of Materials
907-108-4	Subletting of Contract
907-108-6	Default and Termination of Contract
907-109-5	Measurement and Payment
907-605-1	Underdrains
907-618-12	Traffic Control Management
907-619-5	Traffic Control for Construction Zones
907-626-12	Thermoplastic Traffic Markings
907-627-1	Raised Pavement Markings
907-700-2	Materials and Tests w/Attachment
907-701-4	Hydraulic Cement, w/ Supplement
907-702-4	Bituminous Materials
907-703-2	Gradation
907-705-1	Stone Riprap

PROJECT: STBG-0040-03(028)/110034301 - Tishomingo

907-707-3	Joint Materials
907-711-2	Plain Steel Wire
907-712-1	Fence and Guardrail
907-714-4	Miscellaneous Materials
907-718-1	Timber and Dimension Lumber
907-720-4	Pavement Marking Materials
907-721-4	Materials for Signing
907-824-4	Routine Bridge Repair

Section 905 - Proposal, Proposal Bid Items, Combination Bid Proposal
Certification of Performance - Prior Federal-Aid Contracts
Certification Regarding Non-Collusion, Debarment and Suspension
SAM.GOV Registration and Unique Entity ID
Section 902 - Contract Form
Section 903 - Contract Bond Forms

(REVISIONS TO THE ABOVE WILL BE INDICATED ON THE SECOND SHEET OF SECTION 905 AS ADDENDA)

01/20/2026 03:19 PM

MISSISSIPPI DEPARTMENT OF TRANSPORTATION

SECTION 904 - NOTICE TO BIDDERS NO. 7554 **CODE: (SP)**

DATE: **01/14/2026**

SUBJECT: **Contract Time**

PROJECT: **STBG-0040-03(028)/110034-301000 – Tishomingo County**

The calendar date for completion of work to be performed by the Contractor for this project shall be **April 30, 2026** which date or extended date as provided in Subsection 108.06 shall be the end of contract time. It is anticipated that the Notice of Award will be issued no later than **February 10, 2026** and the effective date of the Notice to Proceed / Beginning of Contract Time will be simultaneous with the execution of the contract.

MISSISSIPPI DEPARTMENT OF TRANSPORTATION

SECTION 904 - NOTICE TO BIDDERS NO. 7557 **CODE: (SP)**

DATE: **01/14/2026**

SUBJECT: **Milestone Date**

PROJECT: **STBG-0040-03(020) / 110034301 – Tishomingo County**

Milestone – Interim Completion Date. Bidders are advised that this project carries a Project Completion Milestone that is an interim completion date for completion of all work necessary to reopen SR 25. This work includes signing of the detour and construction zone, removal of existing bridge panels, construction and replacement of new bridge panels, installation of new bearing pads, hardware replacement and epoxy repairs related to span 2 and all other incidentals necessary to reopen SR 25. The Contractor will be assessed a penalty in the amount of **$61,663** for each calendar day past the milestone completion date until the Milestone Work is complete.

Bidders are further advised that the road shall not be shut down until the fabricated precast replacement units are ready to be delivered to or already on-site and construction and replacement of bridge units for the existing bridge is ready to begin. The Milestone Completion Date shall be **20 calendar days after the date that the road is shut down as determined by the engineer.** The contractor will be allowed to work 24/7 to complete milestone work only.

Final Completion Date. Final completion date to complete all remaining work required in the contract shall be **April 30, 2026** as referenced in Notice to Bidders No. 7554, Contract Time.

"General Decision Number: MS20260117 01/02/2026

Superseded General Decision Number: MS20250117

State: Mississippi

Construction Type: Highway

County: Tishomingo County in Mississippi.

HIGHWAY CONSTRUCTION PROJECTS

Modification Number	Publication Date
0	01/02/2026

SUMS2010-040 08/04/2014

	Rates	Fringes
CARPENTER (Form Work Only).....	$ 12.42	0.87
CARPENTER, Excludes Form Work....	$ 13.49	0.00
CEMENT MASON/CONCRETE FINISHER...	$ 13.70	0.00
ELECTRICIAN.....	$ 21.80	7.93
HIGHWAY/PARKING LOT STRIPING: Truck Driver (Line Striping Truck).....	$ 14.75	0.00
INSTALLER - GUARDRAIL.....	$ 11.51	0.00
IRONWORKER, REINFORCING.....	$ 14.82	0.00
LABORER: Common or General, Including Asphalt Raking, Shoveling, Spreading and Concrete Work.....	$ 10.53	0.00
LABORER: Flagger.....	$ 9.76	0.00
LABORER: Grade Checker.....	$ 12.77	0.00
LABORER: Landscape.....	$ 9.56	0.00
LABORER: Mason Tender - Cement/Concrete.....	$ 11.08	0.00
LABORER: Pipelayer.....	$ 10.76	0.00
LABORER: Laborer-Cones/ Barricades/Barrels - Setter/Mover/Sweeper.....	$ 10.38	0.00
OPERATOR: Asphalt Spreader.....	$ 16.03	0.00
OPERATOR: Backhoe/Excavator/Trackhoe.....	$ 14.40	0.00
OPERATOR: Boring Machine.....	$ 15.14	0.00
OPERATOR: Broom/Sweeper.....	$ 10.94	0.00

OPERATOR: Bulldozer.....$ 14.73 0.00

OPERATOR: Concrete Saw.....$ 15.68 0.00

OPERATOR: Crane.....$ 18.32 0.00

OPERATOR: Distributor.....$ 12.59 0.00

OPERATOR: Drill.....$ 19.22 0.00

OPERATOR: Grader/Blade.....$ 14.57 0.00

OPERATOR: Loader.....$ 11.54 0.00

OPERATOR: Mechanic.....$ 15.13 0.00

OPERATOR: Milling Machine.....$ 15.12 0.00

OPERATOR: Oiler.....$ 12.33 0.00

OPERATOR: Paver (Asphalt,
Aggregate, and Concrete).....$ 14.47 0.00

OPERATOR: Piledriver.....$ 15.13 0.00

OPERATOR: Roller (All Types)....$ 11.54 0.00

OPERATOR: Scraper.....$ 13.15 0.00

OPERATOR: Tractor.....$ 11.25 0.00

OPERATOR: Trencher.....$ 15.00 0.00

TRUCK DRIVER: Flatbed Truck.....$ 13.79 0.00

TRUCK DRIVER: Lowboy Truck.....$ 13.30 0.00

TRUCK DRIVER: Mechanic.....$ 14.23 0.00

TRUCK DRIVER: Off the Road
Truck.....$ 12.29 0.00

TRUCK DRIVER: Water Truck.....$ 10.58 0.00

TRUCK DRIVER: Dump Truck (All
Types).....$ 11.71 0.00

TRUCK DRIVER: Semi/Trailer
Truck.....$ 15.81 0.00

WELDERS - Receive rate prescribed for craft performing
operation to which welding is incidental.

==========

Note: Executive Order (EO) 13706, Establishing Paid Sick Leave
for Federal Contractors applies to all contracts subject to the
Davis-Bacon Act for which the contract is awarded (and any
solicitation was issued) on or after January 1, 2017. If this
contract is covered by the EO, the contractor must provide
employees with 1 hour of paid sick leave for every 30 hours
they work, up to 56 hours of paid sick leave each year.
Employees must be permitted to use paid sick leave for their
own illness, injury or other health-related needs, including

preventive care; to assist a family member (or person who is like family to the employee) who is ill, injured, or has other health-related needs, including preventive care; or for reasons resulting from, or to assist a family member (or person who is like family to the employee) who is a victim of, domestic violence, sexual assault, or stalking. Additional information on contractor requirements and worker protections under the EO is available at https://www.dol.gov/agencies/whd/government-contracts.

Note: Executive Order 13658 generally applies to contracts subject to the Davis-Bacon Act that were awarded on or between January 1, 2015 and January 29, 2022, and that have not been renewed or extended on or after January 30, 2022. Executive Order 13658 does not apply to contracts subject only to the Davis-Bacon Related Acts regardless of when they were awarded. If a contract is subject to Executive Order 13658, the contractor must pay all covered workers at least $13.30 per hour (or the applicable wage rate listed on this wage determination, if it is higher) for all hours spent performing on the contract in 2025. The applicable Executive Order minimum wage rate will be adjusted annually. Additional information on contractor requirements and worker protections under Executive Order 13658 is available at www.dol.gov/whd/govcontracts.

Unlisted classifications needed for work not included within the scope of the classifications listed may be added after award only as provided in the labor standards contract clauses (29CFR 5.5 (a) (1) (iii)).

The body of each wage determination lists the classifications and wage rates that have been found to be prevailing for the type(s) of construction and geographic area covered by the wage determination. The classifications are listed in alphabetical order under rate identifiers indicating whether the particular rate is a union rate (current union negotiated rate), a survey rate, a weighted union average rate, a state adopted rate, or a supplemental classification rate.

Union Rate Identifiers

A four-letter identifier beginning with characters other than ""SU"", ""UAVG"", ?SA?, or ?SC? denotes that a union rate was prevailing for that classification in the survey. Example: PLUM0198-005 07/01/2024. PLUM is an identifier of the union whose collectively bargained rate prevailed in the survey for this classification, which in this example would be Plumbers. 0198 indicates the local union number or district council number where applicable, i.e., Plumbers Local 0198. The next number, 005 in the example, is an internal number used in processing the wage determination. The date, 07/01/2024 in the example, is the effective date of the most current negotiated rate.

Union prevailing wage rates are updated to reflect all changes over time that are reported to WHD in the rates in the collective bargaining agreement (CBA) governing the classification.

Union Average Rate Identifiers

The UAVG identifier indicates that no single rate prevailed for those classifications, but that 100% of the data reported for the classifications reflected union rates. EXAMPLE: UAVG-OH-0010 01/01/2024. UAVG indicates that the rate is a weighted union average rate. OH indicates the State of Ohio. The next number, 0010 in the example, is an internal number used in producing the wage determination. The date, 01/01/2024 in the example, indicates the date the wage determination was updated to reflect the most current union average rate.

A UAVG rate will be updated once a year, usually in January, to reflect a weighted average of the current rates in the collective bargaining agreements on which the rate is based.

Survey Rate Identifiers

The ""SU"" identifier indicates that either a single non-union rate prevailed (as defined in 29 CFR 1.2) for this classification in the survey or that the rate was derived by computing a weighted average rate based on all the rates reported in the survey for that classification. As a weighted average rate includes all rates reported in the survey, it may include both union and non-union rates. Example: SUFL2022-007 6/27/2024. SU indicates the rate is a single non-union prevailing rate or a weighted average of survey data for that classification. FL indicates the State of Florida. 2022 is the year of the survey on which these classifications and rates are based. The next number, 007 in the example, is an internal number used in producing the wage determination. The date, 6/27/2024 in the example, indicates the survey completion date for the classifications and rates under that identifier.

?SU? wage rates typically remain in effect until a new survey is conducted. However, the Wage and Hour Division (WHD) has the discretion to update such rates under 29 CFR 1.6(c)(1).

State Adopted Rate Identifiers

The ""SA"" identifier indicates that the classifications and prevailing wage rates set by a state (or local) government were adopted under 29 C.F.R 1.3(g)-(h). Example: SAME2023-007 01/03/2024. SA reflects that the rates are state adopted. ME refers to the State of Maine. 2023 is the year during which the state completed the survey on which the listed classifications and rates are based. The next number, 007 in the example, is an internal number used in producing the wage determination. The date, 01/03/2024 in the example, reflects the date on which the classifications and rates under the ?SA? identifier took effect under state law in the state from which the rates were adopted.

WAGE DETERMINATION APPEALS PROCESS

1) Has there been an initial decision in the matter? This can be:

a) a survey underlying a wage determination
b) an existing published wage determination
c) an initial WHD letter setting forth a position on a wage determination matter
d) an initial conformance (additional classification and rate) determination

On survey related matters, initial contact, including requests for summaries of surveys, should be directed to the WHD Branch of Wage Surveys. Requests can be submitted via email to davisbaconinfo@dol.gov or by mail to:

Branch of Wage Surveys
Wage and Hour Division
U.S. Department of Labor
200 Constitution Avenue, N.W.
Washington, DC 20210

Regarding any other wage determination matter such as conformance decisions, requests for initial decisions should be directed to the WHD Branch of Construction Wage Determinations. Requests can be submitted via email to BCWD-Office@dol.gov or by mail to:

Branch of Construction Wage Determinations
Wage and Hour Division
U.S. Department of Labor
200 Constitution Avenue, N.W.
Washington, DC 20210

2) If an initial decision has been issued, then any interested party (those affected by the action) that disagrees with the decision can request review and reconsideration from the Wage and Hour Administrator (See 29 CFR Part 1.8 and 29 CFR Part 7). Requests for review and reconsideration can be submitted via email to dba.reconsideration@dol.gov or by mail to:

Wage and Hour Administrator
U.S. Department of Labor
200 Constitution Avenue, N.W.
Washington, DC 20210

The request should be accompanied by a full statement of the interested party's position and any information (wage payment data, project description, area practice material, etc.) that the requestor considers relevant to the issue.

3) If the decision of the Administrator is not favorable, an interested party may appeal directly to the Administrative Review Board (formerly the Wage Appeals Board). Write to:

Administrative Review Board
U.S. Department of Labor
200 Constitution Avenue, N.W.
Washington, DC 20210.

==========

END OF GENERAL DECISION
"

SUMMARY OF REVISIONS

REV. NO.	DATE	1ST ORDER	ADDENDUM	2ND ORDER	INITIALS	SHEET ID.	DESCRIPTION
1	1/12/2026		X		TG	DCS-1	CORRECTED SPELLING ERROR AND ADDED NOTE
2	1/13/2026		X		TG	PM-1, TCP-1, TCP-4, TCP-5,	UPDATED STANDARDS
						TCP-8, TCP-9, TCP-10, TCP-13,	
						TCP-16	

ADDENDUM

DESIGNED BY: M.F. GRONDIN

DETAILED BY:

CHECKED BY:

DATE:

FMS CON: 110034/301000

PROJECT NO.: STBG-0040-03(028)

COUNTY: TISHOMINGO

SUMMARY OF REVISIONS

SHEET ID
REV-1

SHEET NO.

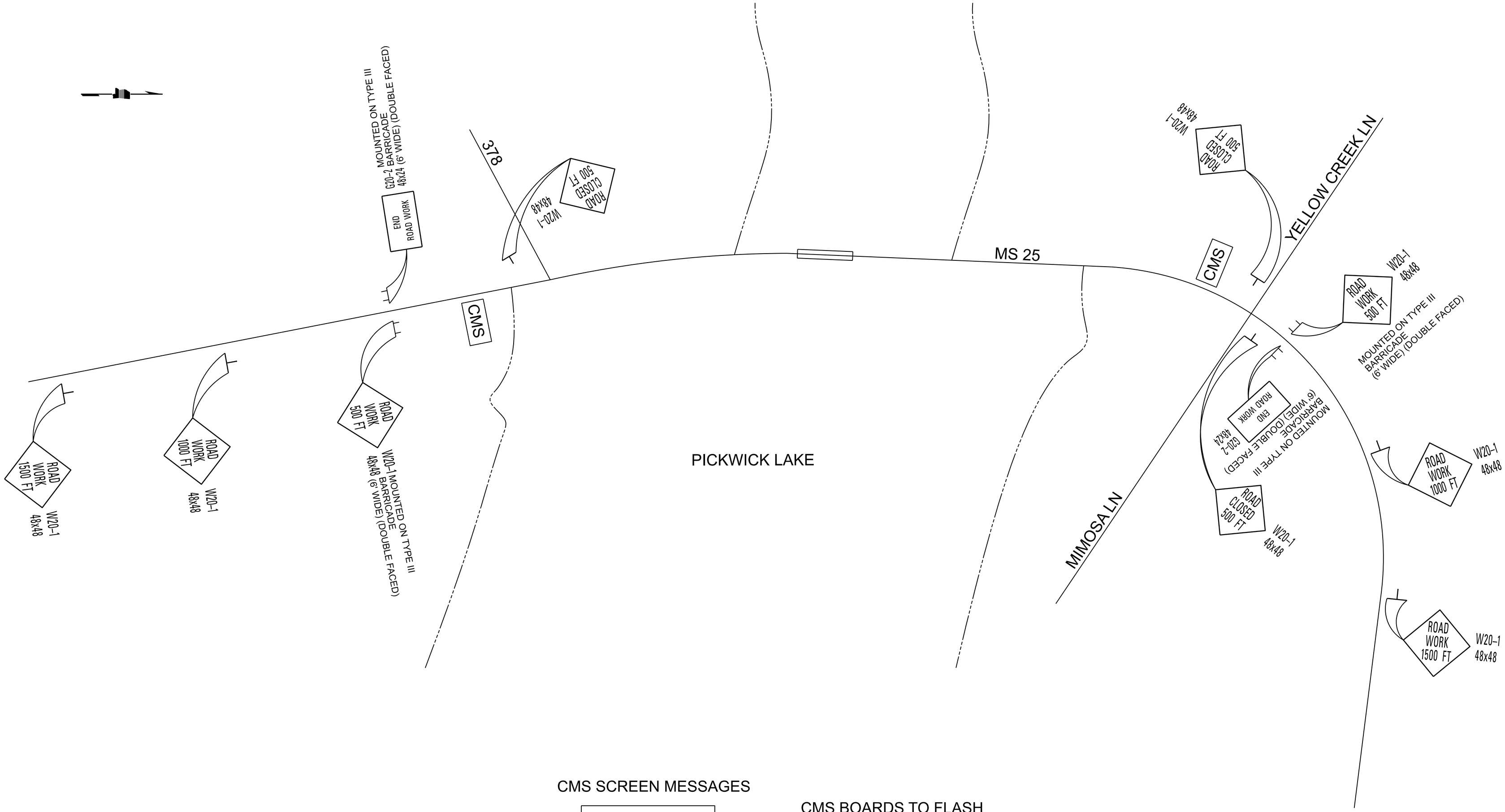

CMS SCREEN MESSAGES

BRIDGE TO CLOSE

SCREEN MESSAGE 1

"MONTH" "DAY"

SCREEN MESSAGE 2

CMS BOARDS TO FLASH SCREEN MESSAGES FOR TWO (2) WEEKS PRIOR TO THE BRIDGE CLOSING.

MONTH AND DAY TO BE UPDATED BASED ON ACTUAL CLOSURE DATE.

WHEN THE BRIDGE IS CLOSED, CMS LOCATIONS AND SCREEN MESSAGES TO BE DETERMINED ⚠ BY THE PROJECT ENGINEER.

NOTES:

1. ADVANCE WARNING SIGNS AND DEVICES SHOWN ARE TYPICAL FOR ALL PHASES OF CONSTRUCTION. COORDINATION MUST BE MAINTAINED WITH OTHER CONSTRUCTION ACTIVITIES REQUIRING ADVANCE WARNING SIGNS. SIGN LOCATIONS AND TYPES ARE TO BE MODIFIED WHEN ADDITIONAL SIGNS ARE REQUIRED FOR CHANNELIZATION, SHIFTS, OR CLOSURES AS REQUIRED FOR VARIOUS OPERATIONS. SIGNS TO REMAIN IN PLACE UNTIL ALL PHASES OF CONSTRUCTION ARE COMPLETE
2. SIGNS MAY BE ADJUSTED FOR NECESSARY FIELD CONDITIONS.
3. ALL W20-1 "AHEAD" SIGNS TO BE PLACED AT A MINIMUM OF 500 FT. IN ADVANCE TO THE POINT OF CONSTRUCTION.
4. TRAFFIC CONTROL DEVICES COST TO BE ABSORBED UNDER MAINTENANCE OF TRAFFIC.

⚠ THE CONTRACTOR SHALL COORDINATE WITH MDOT (MATT DUNN, DISTRICT 1 ENGINEER 662-842-1122) AND TDOT (CODY ROBERTS, TDOT DISTRICT 48 OPERATIONS MANAGER 731-935-0181) ON PROPOSED ROAD CLOSURE DATES AND TIMES PRIOR TO CLOSING THE ROAD FOR CONSTRUCTION

DEPARTMENT OF TRANSPORTATION MISSISSIPPI

ADDENDUM

DESIGNED BY:
DETAILED BY:
CHECKED BY:
DATE:

FMS CON: 110034/301000
PROJECT NO.: STBG-0040-03(028)
COUNTY: TISHOMINGO

DETAIL OF CONSTRUCTION SIGNING

SHEET ID
DCS-1

SHEET NO.
6

PLAN SHEET

1/12/2026 8:16:34 AM DCS-1.dgn

STATE	PROJECT NO.
MISS.	

ADDENDUM

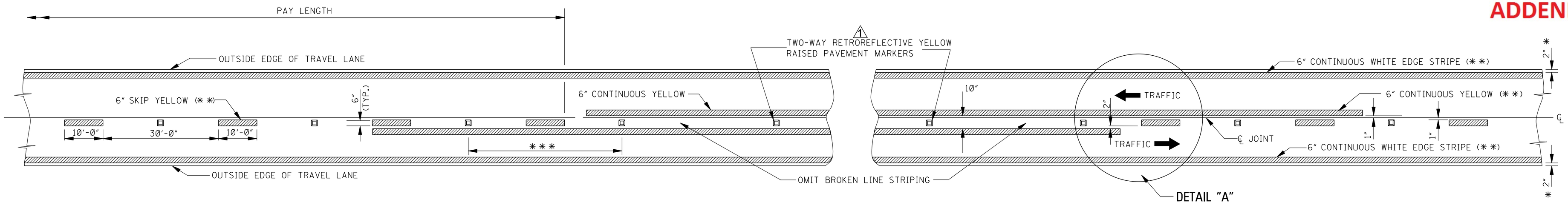

TWO–WAY TRAFFIC
(ASPHALT OR CONCRETE PAVEMENT)

NOTE: THE CRITERIA FOR NO-PASSING ZONES CAN BE FOUND IN THE MDOT ROADWAY DESIGN MANUAL, SECTION 11-1.01.

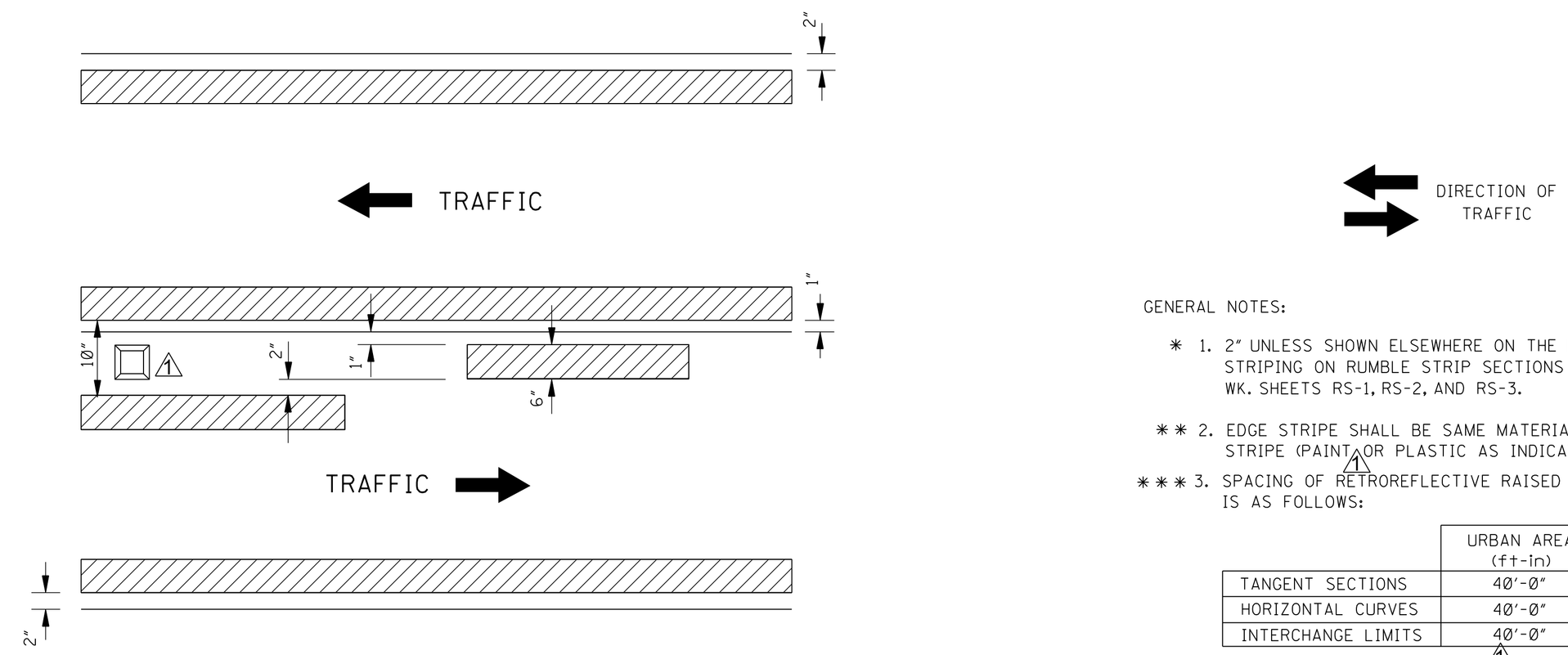

DETAIL "A"

GENERAL NOTES:

* 1. 2" UNLESS SHOWN ELSEWHERE ON THE PLANS. FOR STRIPING ON RUMBLE STRIP SECTIONS REFER TO WK. SHEETS RS-1, RS-2, AND RS-3.

** 2. EDGE STRIPE SHALL BE SAME MATERIAL AS LANE-LINE STRIPE (PAINT OR PLASTIC AS INDICATED IN PAY ITEMS).

*** 3. SPACING OF RETROREFLECTIVE RAISED PAVEMENT MARKERS IS AS FOLLOWS:

	URBAN AREA (ft-in)	RURAL AREA (ft-in)
TANGENT SECTIONS	40'-0"	80'-0"
HORIZONTAL CURVES	40'-0"	40'-0"
INTERCHANGE LIMITS	40'-0"	† 40'-0"

† NOTE: ON THE MAIN FACILITY, RETROREFLECTIVE RED-CLEAR RAISED PAVEMENT MARKERS ON A 40'-0" SPACING WILL BE REQUIRED ON LANE-LINE(S) THROUGH ALL INTERCHANGE AREAS BEGINNING 1000' IN ADVANCE (IN DIRECTION OF TRAFFIC) OF THE EXIT RAMP TAPER AND CONTINUING THROUGH THE INTERCHANGE TO THE END OF THE ENTRANCE RAMP TAPER.

4. PAVEMENT MARKERS SHALL BE HIGH PERFORMANCE RETROREFLECTIVE RAISED PAVEMENT MARKERS AS LISTED IN THE MDOT "APPROVED PRODUCTS LIST."

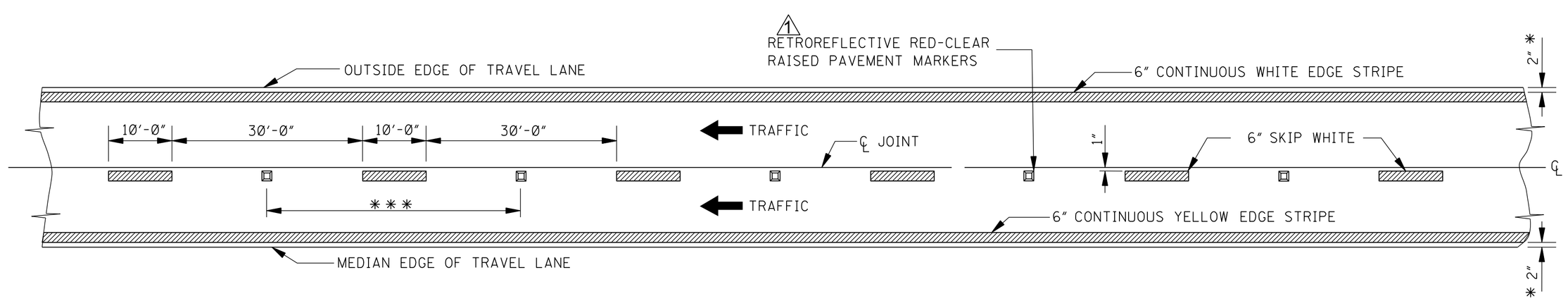

4–LANE WITH ONE–WAY TRAFFIC

DATE	REVISION	BY	STN
12/11/25	REVISE RPMS AND TEXT		

MISSISSIPPI DEPARTMENT OF TRANSPORTATION
ROADWAY DESIGN DIVISION
STANDARD PLAN

PAVEMENT MARKING DETAILS FOR 2–LANE AND 4–LANE DIVIDED ROADWAYS

MDOT MISSISSIPPI DEPARTMENT OF TRANSPORTATION

WORKING NUMBER PM-1

ISSUE DATE: AUGUST 01, 2017

SHEET NUMBER 6051

STATE	PROJECT NO.
MISS.	

ADDENDUM

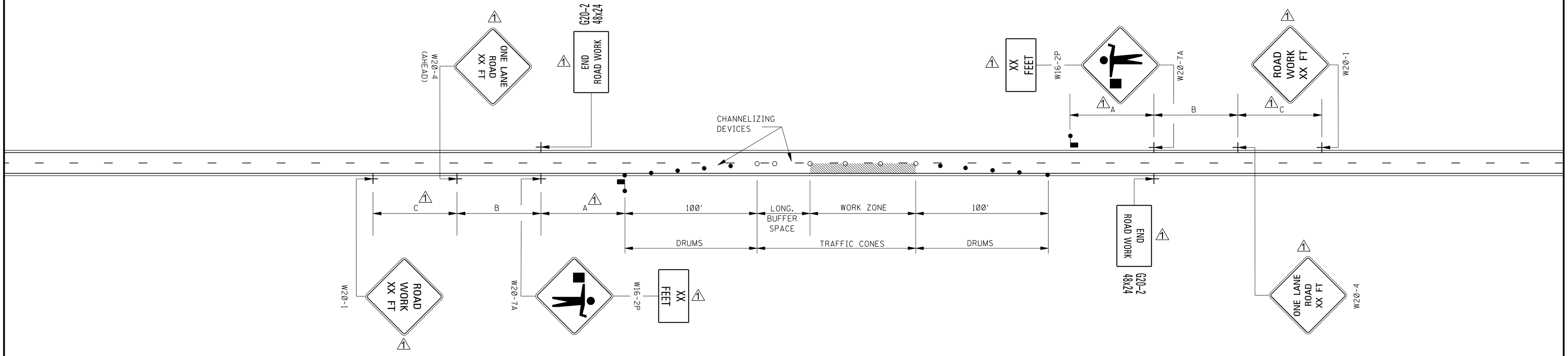

LEGEND

- FLAGGER
- ● RETROREFLECTIVE FREE-STANDING PLASTIC DRUMS
- ○ TRAFFIC CONES (28" HEIGHT MINIMUM)

GENERAL NOTES:

1. THE LOCATION OF CHANNELIZING DEVICES AND THE WORK AREA LAYOUT SHALL BE BASED ON THE CRITERIA IN THE FOLLOWING TABLE. FLAGGER STATIONS SHALL BE LOCATED SUCH THAT APPROACHING VEHICLES WILL HAVE SUFFICIENT DISTANCE TO STOP. VALUES IN STOPPING SIGHT DISTANCE COLUMN MAY BE USED AS A MINIMUM FOR THIS DISTANCE.

POSTED SPEED AND/OR DESIGN SPEED AND/OR ANTICIPATED OPERATING SPEED (1)	MAXIMUM CHANNELIZING DEVICE SPACING (ft)		LONGITUDINAL BUFFER SPACE (ft) †	STOPPING SIGHT DISTANCE
mph	TAPER	ALONG LANE LINE & WORK ZONE		
25	20	50	55	155
30	20	60	85	200
35	20	70	120	250
40	20	80	170	305
45	20	90	220	360
50	20	100	280	425
55	20	110	335	495
60	20	120	415	570
65	20	130	485	645

† NOTE: BUFFER SPACE MAY BE ADJUSTED AS NEEDED ACCORDING TO ROADWAY GEOMETRY TO MEET SIGHT DISTANCE REQUIREMENTS, AS DIRECTED BY THE ENGINEER.

2. ALL CHANNELIZING DEVICES SHALL BE A MINIMUM OF 28" IN HEIGHT.

3. DIAMOND SHAPED TRAFFIC CONTROL SIGNS SHALL BE A MINIMUM OF 36" x 36" AND BLACK COPY ON FLUORESCENT ORANGE SHEETING.

4. WHEN WORK ZONE IS NO LONGER NEEDED, ALL SIGNS SHALL BE COVERED OR REMOVED AND ALL CHANNELIZING DEVICES SHALL BE MOVED TO THE SHOULDER EDGE.

5. ADDITIONAL FLAGGERS MAY BE NEEDED AS DIRECTED BY THE ENGINEER.

(1) 6. WHEN WORK IS REQUIRED AT NIGHT, FLAGGER STATIONS SHALL BE ILLUMINATED EXCEPT IN EMERGENCIES.

7. CHANNELIZING DEVICE TYPES FOR:
   A. APPROACH AND EXIT TAPERS- RETROREFLECTIVE PLASTIC DRUMS
   B. ALONG LANE LINE AND WORK ZONE- TRAFFIC CONES (28" HEIGHT)

8. ALL TRAFFIC CONTROL ITEMS SHOWN ON THIS SHEET WILL NOT BE MEASURED FOR SEPARATE PAYMENT. THIS WORK SHALL BE INCLUDED IN THE PRICE BID FOR MAINTENANCE OF TRAFFIC.

(1) 9. AN OPTIONAL FLAGGER (W20-7A) WORD MESSAGE IS SHOWN IN THE "STANDARD HIGHWAY SIGNS" PUBLICATION.

DISTANCE BETWEEN SIGNS

ROAD TYPE	A	B	C
URBAN (35 MPH OR LESS)	100 FT.	100 FT.	100 FT.
URBAN (40 - 70 MPH)	350 FT.	350 FT.	350 FT.
RURAL	500 FT.	500 FT.	500 FT.
EXPRESSWAY / FREEWAY	1000 FT.	1500 FT.	2640 FT.

DATE	REVISION	BY
12/11/25	REVISED TEXT	STN

MISSISSIPPI DEPARTMENT OF TRANSPORTATION
ROADWAY DESIGN DIVISION
STANDARD PLAN

TRAFFIC CONTROL PLAN WITH FLAGGER
(ONE-LANE CLOSURE OF TWO-WAY TRAFFIC)

MDOT MISSISSIPPI DEPARTMENT OF TRANSPORTATION

WORKING NUMBER: TCP-1

ISSUE DATE: AUGUST 01, 2017

SHEET NUMBER: 6351

STATE	PROJECT NO.
MISS.	

ADDENDUM

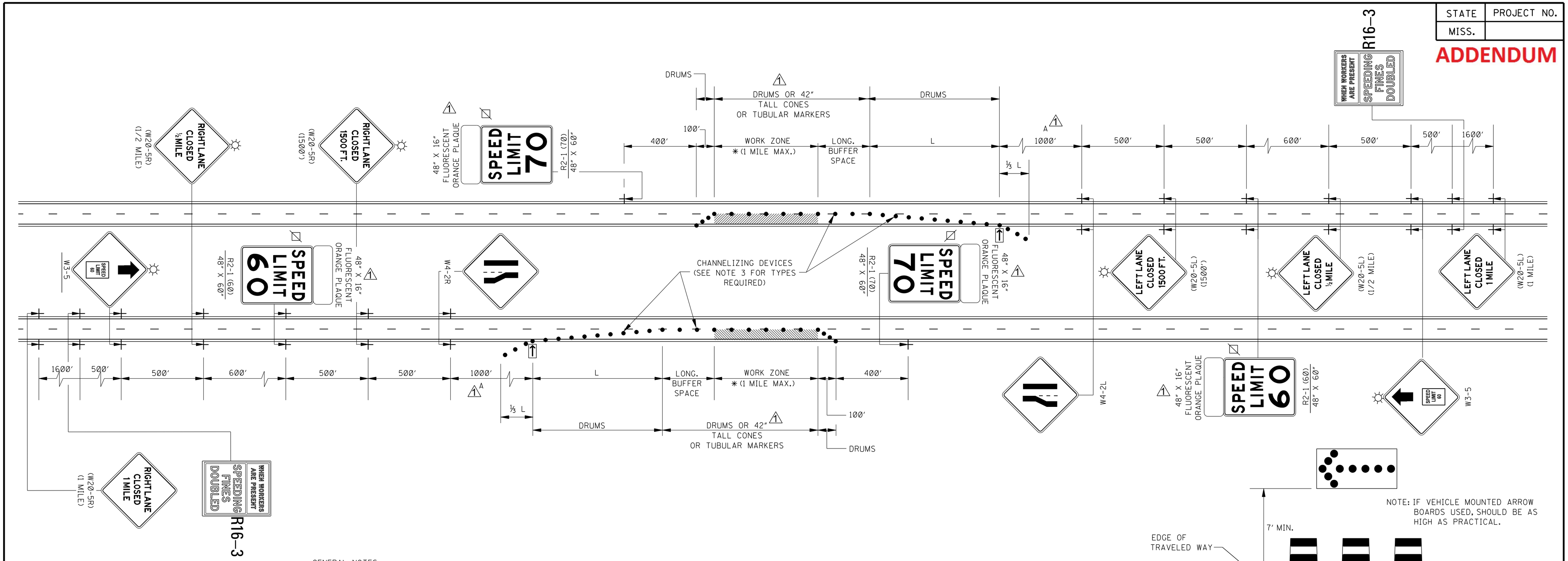

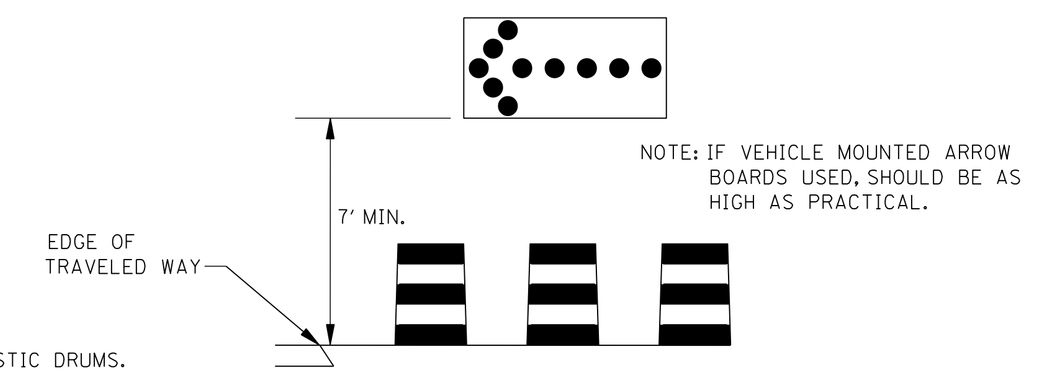

GENERAL NOTES:

1. THE LOCATION OF CHANNELIZING DEVICES AND THE WORK AREA LAYOUT SHALL BE BASED ON THE CRITERIA IN THE FOLLOWING TABLE:

POSTED SPEED AND/OR DESIGN SPEED	MAXIMUM CHANNELIZING DEVICE SPACING (ft)		LONGITUDINAL BUFFER SPACE (ft) ††	TAPER† LENGTH (ft)
mph	TAPER	ALONG BUFFER SPACE & WORK ZONE		
≤40	40	80	305	320
45	45	90	360	540
50	50	100	425	600
55	55	110	495	660
60	60	120	570	720
65	65	130	645	780
70	70	140	730	540

† NOTE: TAPER LENGTHS ARE DETERMINED USING THE FOLLOWING EQUATIONS:
$L = WS$ FOR SPEEDS OF 45 mph OR GREATER
$L = WS^2/60$ FOR SPEEDS OF 40 mph OR LESS
WHERE: L = MINIMUM LENGTH OF TAPER IN FEET
W = WIDTH OF OFFSET (USUALLY LANE WIDTH) IN FEET
S = DESIGN SPEED OR 85TH PERCENTILE SPEED IN MILES PER HOUR

†† NOTE: BUFFER SPACE MAY BE ADJUSTED AS NEEDED ACCORDING TO ROADWAY GEOMETRY TO MEET SIGHT DISTANCE REQUIREMENTS, AS DIRECTED BY THE ENGINEER.

2. FLASHING ARROW PANEL SHOULD BE AS LEVEL AS POSSIBLE AS APPROVED BY THE ENGINEER. FLASHING ARROW PANEL SHOULD BE LOCATED AT THE BEGINNING OF THE TAPER OR, IF THE SHOULDER IS TOO NARROW, BEHIND THE CHANNELIZING DEVICES IN THE CLOSED LANE.

3. CHANNELIZING DEVICES:

A. ALL CHANNELIZING DEVICES IN TAPERS SHALL BE RETROREFLECTIVE FREE STANDING PLASTIC DRUMS.

B. CHANNELIZING DEVICES IN TANGENTS MAY BE EITHER RETROREFLECTIVE FREE STANDING PLASTIC DRUMS OR 42" TALL CONES OR TUBULAR MARKERS

C. DEVICE RETROREFLECTIVE BANDS SHALL BE IN ACCORDANCE WITH THE LATEST EDITION OF THE MUTCD.

4. ALL WARNING SIGNS (W SERIES) SHOULD BE A MINIMUM OF 48" X 48". AND SHALL BE BLACK COPY ON FLUORESCENT ORANGE SHEETING.

5. ALL EXISTING SPEED LIMIT SIGNS WHICH ARE INFLUENCED BY OR CONFLICT WITH THE SPEED ZONE REDUCTION SHALL BE COVERED AS DIRECTED BY THE ENGINEER WHILE THE REDUCED SPEED LIMIT IS IN EFFECT. TAPE SHALL NOT BE USED ON FACE OF SIGN.

6. ADDITIONAL REDUCED REGULATORY SPEED LIMIT SIGNS ARE REQUIRED AT EACH ENTRANCE RAMP WITHIN THE SPEED ZONE. TWO (2) WILL BE REQUIRED FOR EACH RAMP AND LOCATION WILL BE DETERMINED BY THE ENGINEER.

7. THIS TRAFFIC CONTROL PLAN, WITH SPEED ZONE, MAY NOT BE USED ON ANY FACILITY WHERE THE POSTED SPEED LIMIT IS BELOW 65 MPH WITHOUT A COMMISSION ORDER REQUESTING A SPEED LIMIT REDUCTION.

8. LAYOUT SHOWN ABOVE IS FOR AN INTERSTATE WITH A POSTED SPEED LIMIT OF 70 MPH. FOR POSTED SPEED LIMIT OF 65 MPH, THE REDUCED SPEED LIMIT WILL BE 55 MPH.

9. A FLUORESCENT ORANGE PLAQUE IS REQUIRED WITH ALL REGULATORY SPEED LIMIT SIGNS REQUIRED FOR LANE CLOSURE.

10. ALL TRAFFIC CONTROL ITEMS SHOWN ON THIS SHEET WILL NOT BE MEASURED FOR SEPARATE PAYMENT. THIS WORK SHALL BE INCLUDED IN THE PRICE BID FOR MAINTENANCE OF TRAFFIC.

LEGEND

* OR AS SHOWN ELSEWHERE ON THE PLANS.
FLASHING ARROW BOARD (TYPE "C")
BLACK LEGEND AND BORDER ON WHITE BACKGROUND
TYPE "B" WARNING LIGHTS
● RETROREFLECTIVE FREE-STANDING PLASTIC DRUMS

DATE	REVISION	BY
12/11/25	REVISE TEXT	STN

MISSISSIPPI DEPARTMENT OF TRANSPORTATION
ROADWAY DESIGN DIVISION
STANDARD PLAN

TRAFFIC CONTROL PLAN FOR POSTED SPEED LIMIT OF 65 OR 70 MPH

(INTERSTATES AND OTHER 4-LANE DIVIDED HIGHWAYS) (MEDIAN LANE OR OUTSIDE LANE CLOSURE) (EXTENDED PERIOD)

ISSUE DATE: AUGUST 01, 2017

WORKING NUMBER TCP-4

SHEET NUMBER 6354

STATE	PROJECT NO.
MISS.	

ADDENDUM

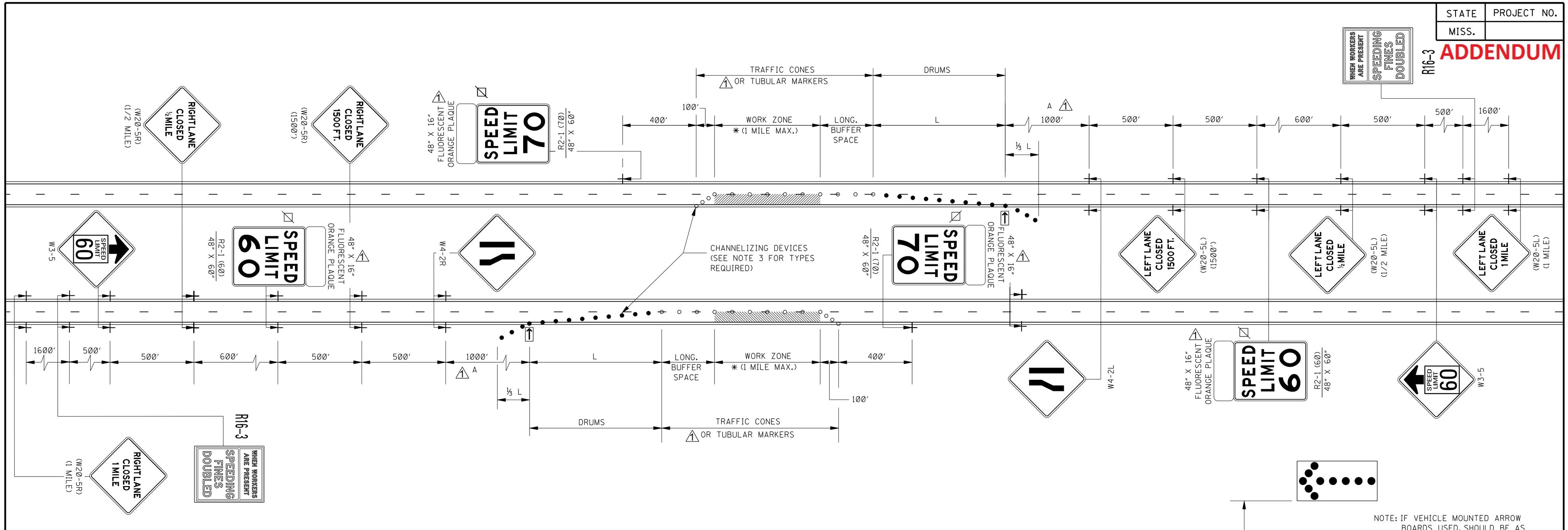

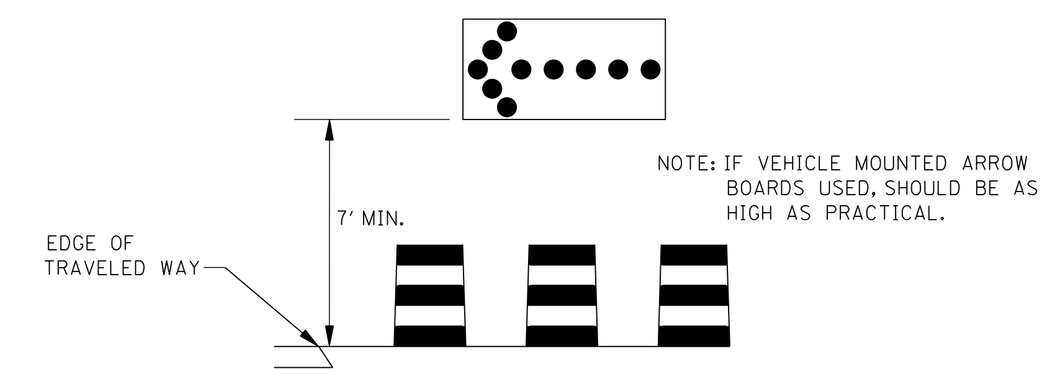

GENERAL NOTES:

1. THE LOCATION OF CHANNELIZING DEVICES AND THE WORK AREA LAYOUT SHALL BE BASED ON THE CRITERIA IN THE FOLLOWING TABLE:

POSTED SPEED AND/OR DESIGN SPEED (mph)	MAXIMUM CHANNELIZING DEVICE SPACING (ft) TAPER	MAXIMUM CHANNELIZING DEVICE SPACING (ft) ALONG LANE LINE & WORK ZONE	†† LONGITUDINAL BUFFER SPACE (ft)	△1 † TAPER LENGTH (ft)	
≤40	40	80	305	320	△1
45	45	90	360	540	△1
50	50	100	425	600	△1
55	55	110	495	660	△1
60	60	120	570	720	△1
65	65	130	645	780	△1
70	70	140	730	840	△1

△1 † NOTE: TAPER LENGTHS ARE DETERMINED USING THE FOLLOWING EQUATIONS:
$L = WS$ FOR SPEEDS OF 45 mph OR GREATER
$L = WS^2/60$ FOR SPEEDS OF 40 mph OR LESS
WHERE: L = MINIMUM LENGTH OF TAPER IN FEET
W = WIDTH OF OFFSET (USUALLY LANE WIDTH) IN FEET
S = DESIGN SPEED OR 85TH PERCENTILE SPEED IN MILES PER HOUR

†† NOTE: BUFFER SPACE MAY BE ADJUSTED AS NEEDED ACCORDING TO ROADWAY GEOMETRY TO MEET SIGHT DISTANCE REQUIREMENTS, AS DIRECTED BY THE ENGINEER.

2. FLASHING ARROW PANEL SHOULD BE AS LEVEL AS POSSIBLE AS APPROVED BY THE ENGINEER. FLASHING ARROW PANEL SHOULD BE LOCATED AT THE BEGINNING OF THE TAPER OR, IF THE SHOULDER IS TOO NARROW, BEHIND THE CHANNELIZING DEVICES IN THE CLOSED LANE.

3. CHANNELIZING DEVICE TYPES FOR:
A. APPROACH TAPER- RETROREFLECTIVE PLASTIC DRUMS
△1 B. ALONG LANE LINE AND WORK ZONE- TRAFFIC CONES OR TUBULAR MARKERS (28" HEIGHT MINIMUM)
△1 C. EXIT TAPER- TRAFFIC CONES OR TUBULAR MARKERS (28" HEIGHT MINIMUM)

4. WHEN WORK ZONE IS NO LONGER NEEDED, ALL SIGNS SHALL BE COVERED OR REMOVED AND THE DRUMS SHALL BE MOVED TO THE SHOULDER EDGE AT THE END OF THE WORK DAY.

5. FOR MOVING OPERATIONS (PAVING) THE CONTRACTOR SHALL HAVE TWO (2) SETS OF ADVANCE WARNING AND REGULATORY SIGNS, PLASTIC DRUMS, AND ARROW BOARD. WHEN THE CONSTRUCTION ZONE IS MOVED AHEAD, ALL SIGNS, PLASTIC DRUMS AND ARROW BOARD SHALL BE IN PLACE ON THE SECOND ZONE BEFORE REMOVING ANY SIGNS, PLASTIC DRUMS OR ARROW BOARD ON THE FIRST ZONE.

△1 6. ALL WARNING SIGNS (W SERIES) SIGNS SHOULD BE A MINIMUM OF 48" X 48". AND SHALL BE BLACK COPY ON FLUORESCENT ORANGE SHEETING.

7. ALL EXISTING SPEED LIMIT SIGNS WHICH ARE INFLUENCED BY OR CONFLICT WITH THE SPEED ZONE REDUCTION SHALL BE COVERED AS DIRECTED BY THE ENGINEER WHILE THE REDUCED SPEED LIMIT IS IN EFFECT. TAPE SHALL NOT BE USED ON THE FACE OF SIGN.

8. ADDITIONAL REDUCED REGULATORY SPEED LIMIT SIGNS ARE REQUIRED AT EACH ENTRANCE RAMP WITHIN THE SPEED ZONE. TWO (2) WILL BE REQUIRED FOR EACH RAMP AND LOCATION WILL BE DETERMINED BY THE ENGINEER.

9. THIS TRAFFIC CONTROL PLAN, WITH SPEED ZONE, MAY NOT BE USED ON ANY FACILITY WHERE THE POSTED SPEED LIMIT IS BELOW 65 MPH WITHOUT A COMMISSION ORDER REQUESTING A SPEED LIMIT REDUCTION.

10. LAYOUT SHOWN ABOVE IS FOR AN INTERSTATE WITH A POSTED SPEED LIMIT OF 70 MPH. FOR POSTED SPEED LIMIT OF 65 MPH, THE REDUCED SPEED LIMIT WILL BE 55 MPH.

△1 11. A FLUORESCENT ORANGE PLAQUE IS REQUIRED WITH ALL REGULATORY SPEED LIMIT SIGNS AND "REDUCED SPEED AHEAD" SIGNS REQUIRED FOR LANE CLOSURE.

12. ALL TRAFFIC CONTROL ITEMS SHOWN ON THIS SHEET WILL NOT BE MEASURED FOR SEPARATE PAYMENT. THIS WORK SHALL BE INCLUDED IN THE PRICE BID FOR MAINTENANCE OF TRAFFIC.

LEGEND

* OR AS SHOWN ELSEWHERE ON THE PLANS.
FLASHING ARROW PANEL (TYPE "C")
BLACK LEGEND AND BORDER ON WHITE BACKGROUND
● RETROREFLECTIVE FREE-STANDING PLASTIC DRUMS
○ TRAFFIC CONES (28" HEIGHT)

DATE	REVISION	BY
12/11/25	REVISED TEXT.	STN

MISSISSIPPI DEPARTMENT OF TRANSPORTATION
ROADWAY DESIGN DIVISION
STANDARD PLAN

TRAFFIC CONTROL PLAN FOR POSTED SPEED LIMIT OF 65 OR 70 MPH

(INTERSTATES AND OTHER 4-LANE DIVIDED HIGHWAYS) (MEDIAN LANE OR OUTSIDE LANE CLOSURE) (WORK DAY ONLY)

ISSUE DATE: AUGUST 01, 2017

MDOT MISSISSIPPI DEPARTMENT OF TRANSPORTATION

WORKING NUMBER TCP-5

SHEET NUMBER 6355

STATE	PROJECT NO.
MISS.	

ADDENDUM

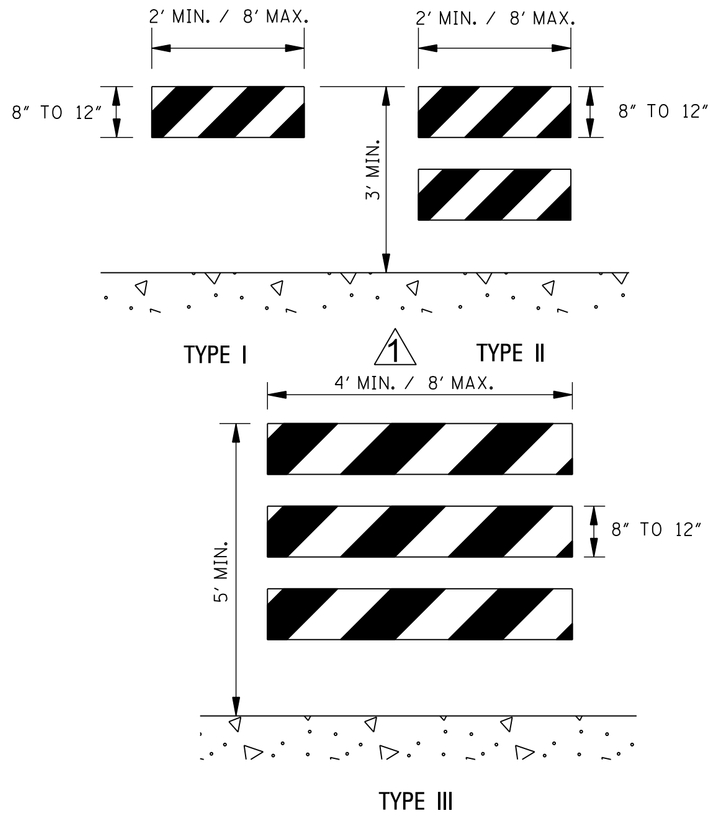

STANDARD BARRICADES

1 1. THE RETROREFLECTIVE MARKING FOR BARRICADE RAILS SHALL BE ORANGE AND WHITE (SLOPING DOWNWARD AT AN ANGLE OF 45° IN THE DIRECTION THAT TRAFFIC IS TO PASS).

2. RAIL STRIPE SHOULD BE 6 INCHES, EXCEPT THAT 4-INCH WIDE STRIPES MAY BE USED IF RAIL LENGTHS ARE LESS THAN 36 INCHES.

3. DO NOT PLACE SANDBAGS OR OTHER DEVICES ON BARRICADE RAILS TO PROVIDE MASS SANDBAGS, HOWEVER, MAY BE PLACES AS BALLAST TO THE LOWER PARTS OF THE FRAME OR THE STAYS TO BARRICADES.

4. FOR ADDITIONAL INFORMATION OR DETAILS, SEE MUTCD, LATEST EDITION.

1 5. BARRICADES ARE CLASSIFIED BY FHWA AS CATEGORY II WORK ZONE DEVICES. A LIST OF CRASHWORTHY BARRICADES AND OTHER CATEGORY II DEVICES CAN BE FOUND ON FHWA'S WEBSITE: http://highways.dot.gov/safety/RwD/reduce-crash-severity

1 6. WHERE ROAD USERS INCLUDE PEDESTRIANS, THE PROVISION OF SUPPLEMENTAL AUDIBLE INFORMATION OR DETECTABLE BARRIERS OR BARRICADES SHOULD BE PROVIDED FOR PEOPLE WITH VISION DISABILITIES.

1 7. BARRICADE RAIL SUPPORTS SHOULD NOT PROJECT INTO PEDESTRIAN CIRCULATION ROUTES MORE THAN 4 INCHES FOR THE SUPPORTS LOCATED BETWEEN 27 INCHES TO 80 INCHES ABOVE THE EXISTING SURFACE.

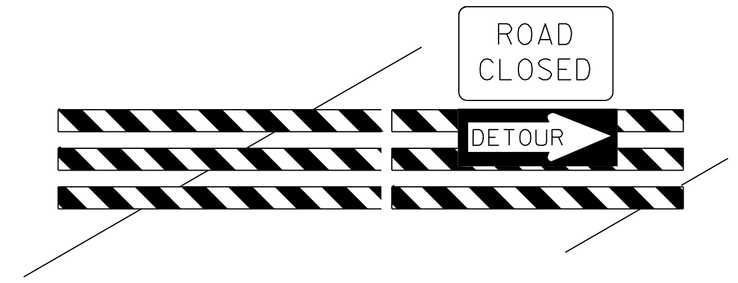

BARRICADE CLOSING A ROAD

BARRICADE CHARACTERISTICS

	I	II	III
WIDTH OF RAIL ✱✱	8" MIN. - 12" MAX.	8" MIN. - 12" MAX.	8" MIN. - 12" MAX.
LENGTH OF RAIL ✱✱	24" MIN. / 96" MAX.	24" MIN. /96" MAX.	48" MIN. / 96" MAX. 1
WIDTH OF STRIPE ✱	6"	6"	6"
HEIGHT	36" MIN.	36" MIN.	60" MIN.
NUMBER OF RETROREFLECTORIZED RAIL FACES	2 (ONE EACH DIRECTION)	4 (TWO EACH DIRECTION)	3 IF FACING TRAFFIC IN ONE DIRECTION 6 IF FACING TRAFFIC IN TWO DIRECTIONS

✱ 1. FOR RAILS LESS THAN 36" LONG, 4" WIDE STRIPES MAY BE USED.

✱✱ 2. BARRICADES INTENDED FOR USE ON EXPRESSWAYS, FREEWAYS AND OTHER HIGH SPEED ROADWAYS, SHALL HAVE A MINIMUM OF 270 in^2 OF REFLECTIVE AREA FACING TRAFFIC.

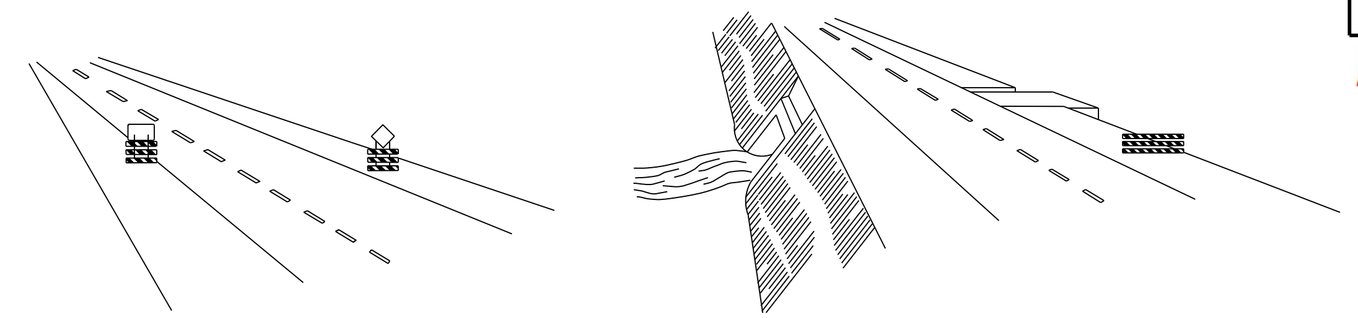

WING BARRICADES

1. WING BARRICADES ARE TYPE III BARRICADES ERECTED ON THE SHOULDER ON ONE OR BOTH SIDES OF THE PAVEMENT TO GIVE THE SENSATION OF A NARROWING OR RESTRICTED ROADWAY. WING BARRICADES MAY BE USED AS A MOUNTING FOR THE ADVANCE WARNING SIGNS OR FLASHERS.

2. WING BARRICADES SHOULD BE USED:
   A. IN ADVANCE OF A CONSTRUCTION PROJECT EVEN WHEN NO PART OF THE ROADWAY IS ACTUALLY CLOSED.
   B. IN ADVANCE OF ALL BRIDGE OR CULVERT WIDENING OPERATIONS.

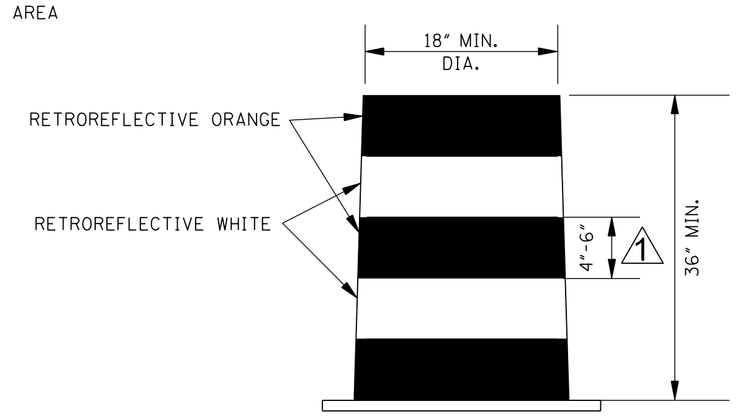

1 PLASTIC DRUM DETAIL

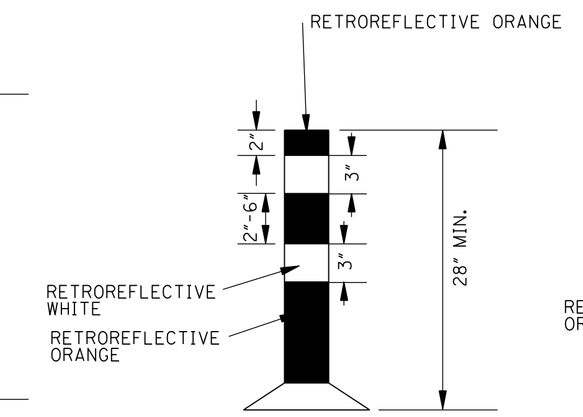

1 TUBULAR MARKER DETAIL

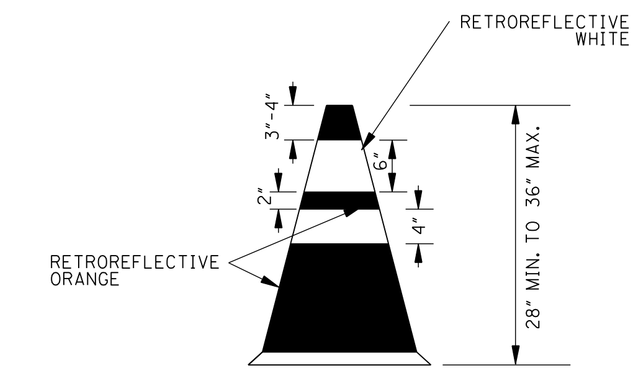

1 PLASTIC CONE DETAIL (28" – 36")

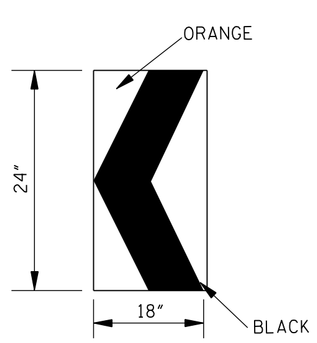

1 RETROREFLECTIVE CHEVRON ALIGNMENT SIGN DETAIL (W1–8)

1. A CHEVRON SIGN CONSISTS OF A BLACK CHEVRON TYPE MARKING ON AN ORANGE BACKGROUND AND SHALL POINT IN THE DIRECTION OF TRAFFIC FLOW.

2. THE CHEVRON SIGN SHALL BE MOUNTED ON CRASHWORTHY SUPPORT.

3. CHEVRON SIGNS MAY BE USED TO SUPPLEMENT OTHER STANDARD DEVICES WHERE ONE OR MORE LANES ARE CLOSED FOR CONSTRUCTION OR MAINTENANCE. THEY SHOULD BE PLACED APPROXIMATELY 2'-0" BEHIND THE LANE TRANSITION STRIPE.

4. CHEVRON SIGNS SHALL BE INSTALLED AT A MINIMUM HEIGHT OF 4 FEET MEASURED VERTICALLY FROM THE BOTTOM OF THE SIGN TO THE ELEVATION OF THE NEAR EDGE OF THE TRAVELWAY.

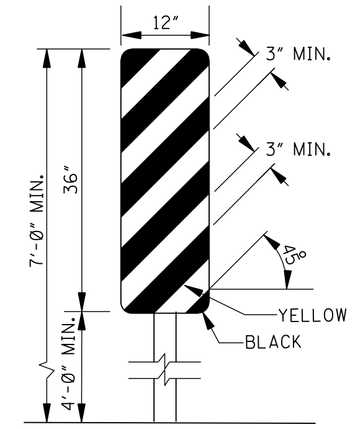

TYPE 3 OBJECT MARKER (OM3–R)

1. TYPE 3 OBJECT MARKERS SHALL BE USED AT ALL EXPOSED BRIDGE ABUTMENTS AND AT OTHER LOCATIONS AS DEEMED NECESSARY BY THE ENGINEER.

2. THE OM3-R IS SHOWN. THE OM3-L IS SIMILAR EXCEPT THE STRIPES SLOPE DOWNWARD FROM THE UPPER LEFT SIDE TO THE LOWER RIGHT SIDE AND SHALL BE PLACED ON THE LEFT SIDE OF THE OBJECT.

3. THE INSIDE EDGE OF THE MARKER SHALL BE IN LINE WITH THE INNER EDGE OF THE OBSTRUCTION.

1 4. THE STRIPING SHALL CONSIST OF ALTERNATING BLACK AND RETOREFLECTIVE YELLOW SLOPING DOWNWARD TOWARD THE SIDE ON WHICH TRAFFIC IS THE PASS.

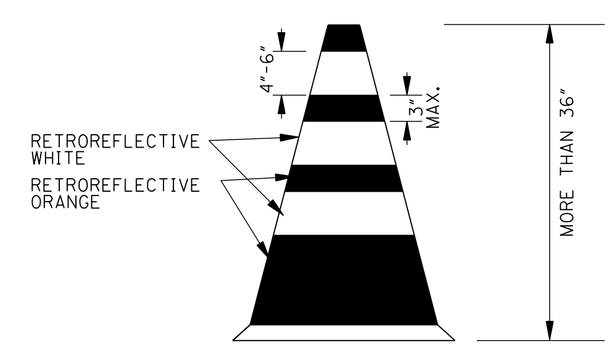

1 PLASTIC CONE DETAIL (36" OR GREATER)

1 1. PLASTIC DRUMS, TUBULAR MARKERS, OR PLASTIC CONES SHALL BE ON END AND USED AS AN EXPEDIENT METHOD FOR TRAFFIC CHANNELIZATION. THE COLOR AND MARKING OF THE DEVICE USED SHALL BE CONSISTENT WITH MARKING STANDARDS FOR BARRICADE. THE PREDOMINANT COLOR ON THE DEVICE USED SHALL BE ORANGE WITH RETROREFLECTIVE, HORIZONTAL, CIRCUMFERENTIAL WHITE STRIPES AS SHOWN ON THE DETAILS.

1 2. DRUMS, TUBULAR MARKERS, OR PLASTIC CONES SHOULD NEVER BE PLACED IN THE ROADWAY WITHOUT WARNING SIGNS.

1 3. WHERE PRACTICAL PLASTIC DRUMS, TUBULAR MARKERS, OR PLASTIC CONES SHOULD BE PLACED NO CLOSER THAN 3'-0" FROM THE EDGE OF TRAVELED LANE.

4. BALLAST SHALL NOT BE PLACED ON THE TOP OF THE DRUM.

DATE	REVISION	BY
12/11/25	REVISED TEXT AND DETAILS.	STN

MISSISSIPPI DEPARTMENT OF TRANSPORTATION
ROADWAY DESIGN DIVISION
STANDARD PLAN

HIGHWAY SIGN AND BARRICADE DETAILS FOR CONSTRUCTION PROJECTS

MDOT MISSISSIPPI DEPARTMENT OF TRANSPORTATION

WORKING NUMBER TCP-8

ISSUE DATE: AUGUST 01, 2017

SHEET NUMBER 6358

STATE	PROJECT NO.
MISS.	

ADDENDUM

MOBILE OPERATIONS ON MULTILANE ROAD

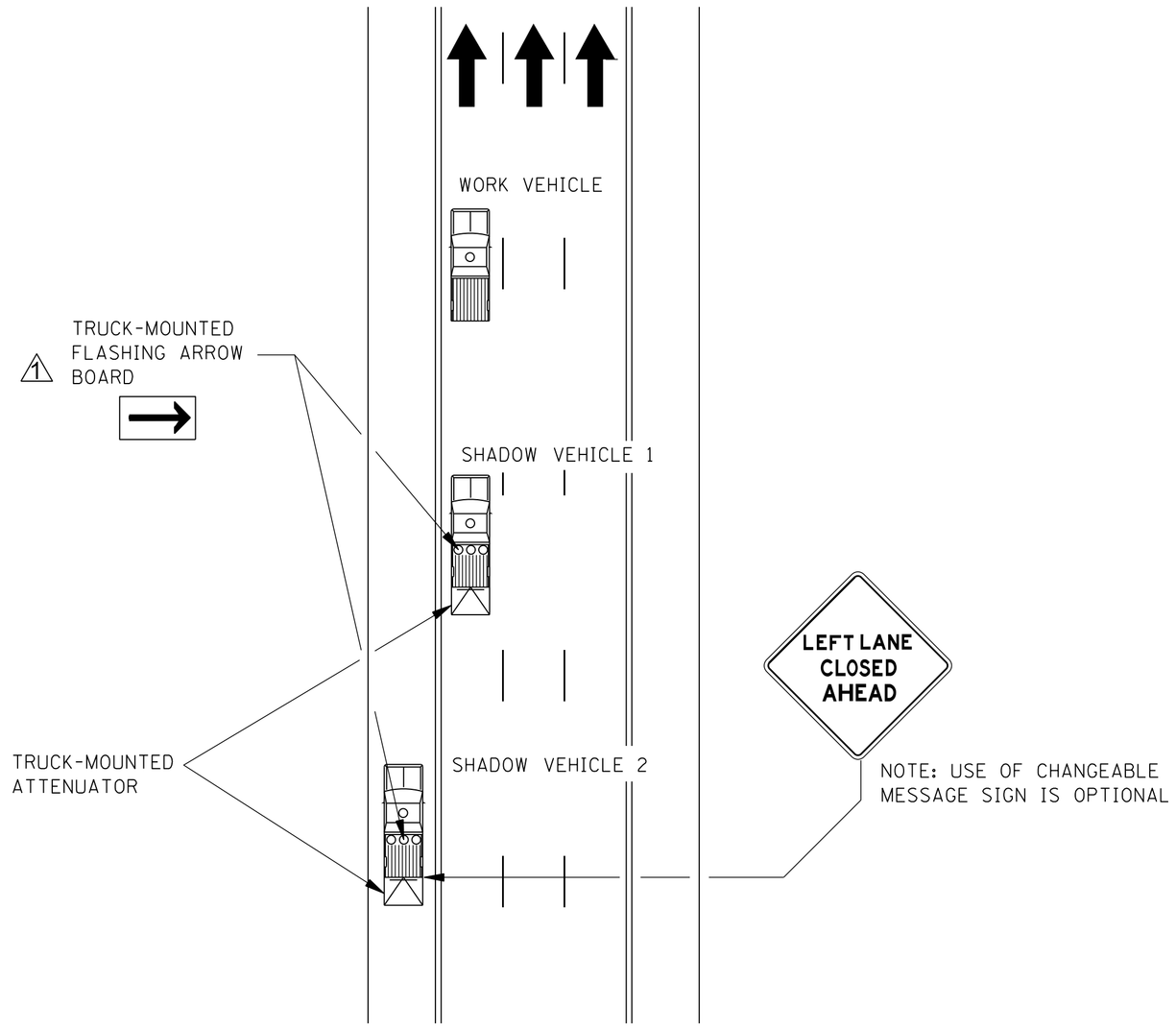

MOBILE OPERATIONS ON MULTILANE ROAD

MOBILE OPERATIONS ON TWO–LANE ROAD

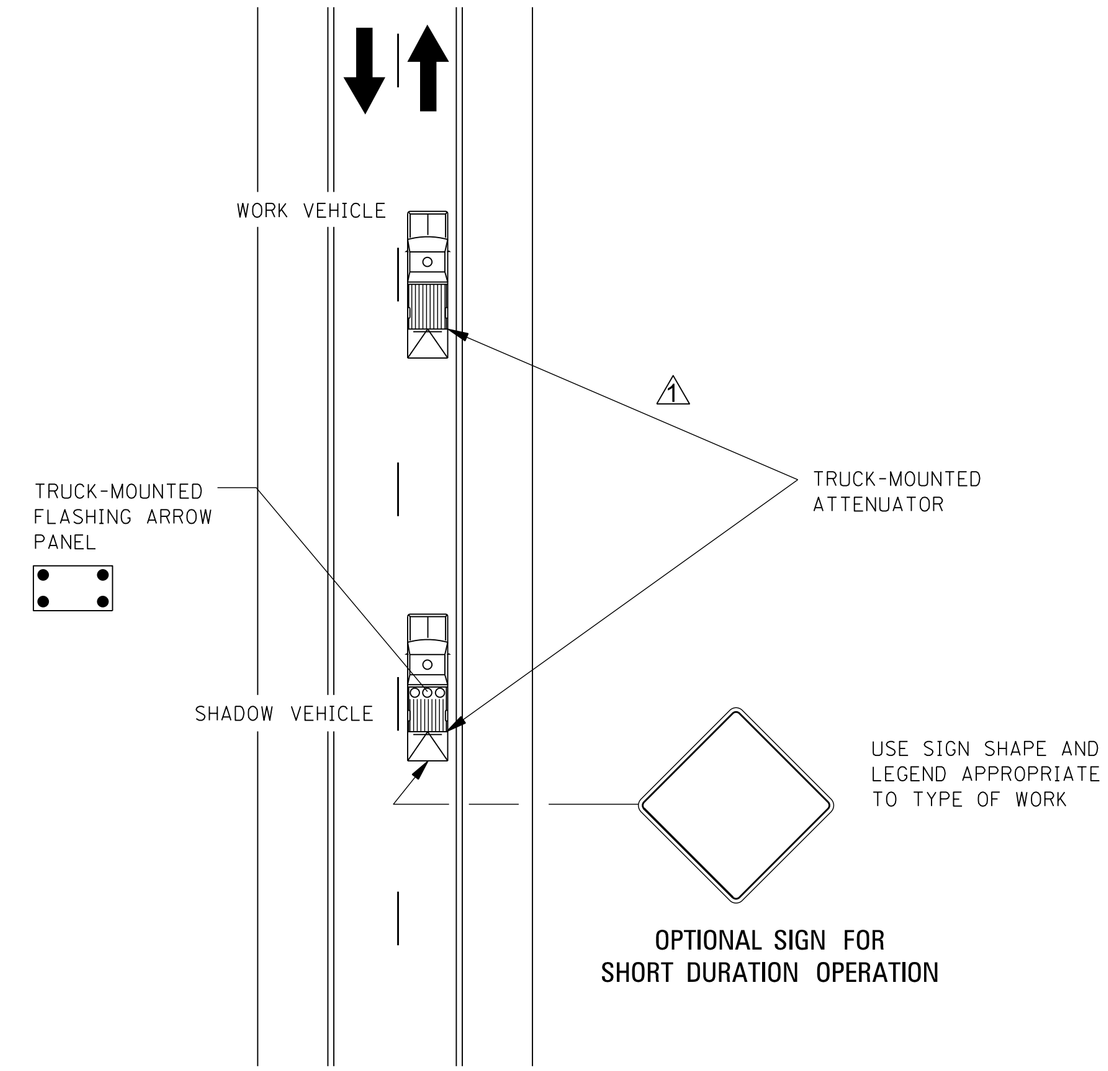

MOBILE OPERATIONS ON TWO–LANE ROAD

NOTES FOR MULTILANE LANE OPERATION:

1. SHADOW AND WORK VEHICLES SHALL DISPLAY HIGH-INTENSITY ROTATING, FLASHING, OSCILLATING, OR STROBE LIGHTS. AN ARROW BOARD SHALL BE USED WHEN A FREEWAY LANE IS CLOSED. WHEN MORE THAN ONE FREEWAY LANE IS CLOSED, A SEPARATE ARROW BOARD SHALL BE USED FOR EACH CLOSED LANE.
2. SHADOW VEHICLE 2 SHOULD BE EQUIPPED WITH AN ARROW BOARD AND TRUCK MOUNTED ATTENUATOR (TMA), AN APPROPRIATE LANE CLOSURE SIGN SHOULD BE PLACED ON SHADOW VEHICLE 2 SO AS NOT TO OBSCURE THE ARROW BOARD.
3. SHADOW VEHICLE 1 SHOULD BE EQUIPPED WITH AN ARROW BOARD AND TRUCK-MOUNTED ATTENUATOR (TMA).
4. SHADOW VEHICLE 2 SHOULD TRAVEL AT A VARYING DISTANCE FROM THE WORK OPERATION SO AS TO PROVIDE ADEQUATE SIGHT DISTANCE FOR TRAFFIC APPROACHING FROM THE REAR.
5. THE SPACING BETWEEN THE WORK VEHICLES AND THE SHADOW VEHICLES, AND BETWEEN EACH SHADOW VEHICLE, SHOULD BE MINIMIZED TO DETER ROAD USERS FROM DRIVING IN BETWEEN.
6. ON HIGH-SPEED ROADWAYS, A THIRD SHADOW VEHICLE (NOT SHOWN) MAY BE USED WITH SHADOW VEHICLE 1 IN THE CLOSED LANE, SHADOW VEHICLE 2 STRADDLING THE EDGE LINE, AND SHADOW VEHICLE 3 ON THE SHOULDER.
7. ARROW BOARD SHALL BE AS A MINIMUM TYPE B, 60" X 30" IN ACCORDANCE WITH THE CRITERIA PRESENTED IN THE MUTCD.
8. WORK SHOULD NORMALLY BE DONE DURING OFF-PEAK HOURS.
9. VEHICLE-MOUNTED SIGNS SHOULD BE MOUNTED WITH THE BOTTOM OF THE SIGN LOCATED AT A MINIMUM HEIGHT OF 48" ABOVE THE PAVEMENT AND SHALL NOT BE OBSCURED BY EQUIPMENT OR SUPPLIES. SIGN LEGENDS SHALL BE COVERED OR TURNED FROM VIEW WHEN WORK IS NOT IN PROGRESS.
10. WHEN THE WORK VEHICLE OCCUPIES AN INTERIOR LANE (A LANE OTHER THAN THE FAR RIGHT OR FAR LEFT) OF A DIRECTIONAL ROADWAY HAVING A RIGHT-HAND SHOULDER 10 FEET OR MORE IN WIDTH, SHADOW VEHICLE 2 SHOULD DRIVE ON THE RIGHT-HAND SHOULDER WITH A SIGN INDICATING THAT WORK IS TAKING PLACE IN THE INTERIOR LANE.
11. ON HIGH-SPEED ROADWAYS, A THIRD SHADOW VEHICLE (NOT SHOWN) MAY BE USED WITH SHADOW VEHICLE 1 IN THE CLOSED LANE, SHADOW VEHICLE 2 STRADDLING THE EDGE LINE, AND SHADOW VEHICLE 3 ON THE SHOULDER.
12. WHERE ADEQUATE SHOULDER WIDTH IS NOT AVAILABLE, SHADOW VEHICLE 3 MAY ALSO STRADDLE THE EDGE LINE.
13. ALL TRAFFIC CONTROL ITEMS SHOWN ON THIS SHEET WILL NOT BE MEASURED FOR SEPARATE PAYMENT. THIS WORK SHALL BE INCLUDED IN THE PRICE BID FOR MAINTENANCE OF TRAFFIC.

NOTES FOR TWO-LANE OPERATION:

1. WHERE PRACTICAL AND WHEN NEEDED, THE WORK AND SHADOW VEHICLES SHOULD PULL OVER PERIODICALLY TO ALLOW TRAFFIC TO PASS. IF THIS CAN NOT BE DONE FREQUENTLY, AS AN ALTERNATIVE, A "DO NOT PASS" SIGN MAY BE PLACED ON THE REAR OF THE VEHICLE BLOCKING THE LANE.
2. THE DISTANCE BETWEEN THE WORK AND SHADOW VEHICLES MAY VARY ACCORDING TO TERRAIN, PAINT DRYING TIME, AND OTHER FACTORS. SHADOW VEHICLES ARE USED TO WARN TRAFFIC OF THE OPERATION AHEAD. WHENEVER ADEQUATE STOPPING SIGHT DISTANCE EXISTS TO THE REAR, THE SHADOW VEHICLE SHOULD MAINTAIN THE MINIMUM DISTANCE AND PROCEED AT THE SAME SPEED AS THE WORK VEHICLE. THE SHADOW VEHICLE SHOULD SLOW DOWN IN ADVANCE OF VERTICAL OR HORIZONTAL CURVES THAT RESTRICT SIGHT DISTANCE.
3. ADDITIONAL SHADOW VEHICLES TO WARN AND REDUCE THE SPEED OF ONCOMING OR OPPOSING TRAFFIC MAY BE USED. POLICE PATROL CARS MAY BE USED FOR THIS PURPOSE.
4. A TRUCK-MOUNTED ATTENUATOR (TMA) SHOULD BE USED ON THE SHADOW VEHICLE AND MAY BE USED ON THE WORK VEHICLE.
5. THE WORK VEHICLE SHALL BE EQUIPPED WITH BEACONS, AND THE SHADOW VEHICLES SHALL BE EQUIPPED WITH TWO HIGH-INTENSITY FLASHING LIGHTS MOUNTED ON THE REAR, ADJACENT TO THE SIGN. SHADOW AND WORK VEHICLES SHALL DISPLAY FLASHING OR ROTATING BEACONS BOTH FORWARD AND TO THE REAR.
6. VEHICLE-MOUNTED SIGNS SHOULD BE MOUNTED WITH THE BOTTOM OF THE SIGN LOCATED AT A MINIMUM HEIGHT OF 48" ABOVE THE PAVEMENT AND SHALL NOT BE OBSCURED BY EQUIPMENT OR SUPPLIES. SIGN LEGENDS SHALL BE COVERED OR TURNED FROM VIEW WHEN WORK IS NOT IN PROGRESS.
7. ARROW BOARD TO BE USED IN CAUTION MODE.
8. ALL TRAFFIC CONTROL ITEMS SHOWN ON THIS SHEET WILL NOT BE MEASURED FOR SEPARATE PAYMENT. THIS WORK SHALL BE INCLUDED IN THE PRICE BID FOR MAINTENANCE OF TRAFFIC.

DATE	REVISION	BY
12/11/25	REVISED TEXT AND DETAILS.	STN

MISSISSIPPI DEPARTMENT OF TRANSPORTATION
ROADWAY DESIGN DIVISION
STANDARD PLAN

TRAFFIC CONTROL PLAN
MOBILE OPERATIONS
MULTILANE ROADS
AND
TWO–LANE ROADS

MDOT MISSISSIPPI DEPARTMENT OF TRANSPORTATION

WORKING NUMBER TCP-9

ISSUE DATE: AUGUST 01, 2017

SHEET NUMBER 6359

STATE	PROJECT NO.
MISS.	

ADDENDUM

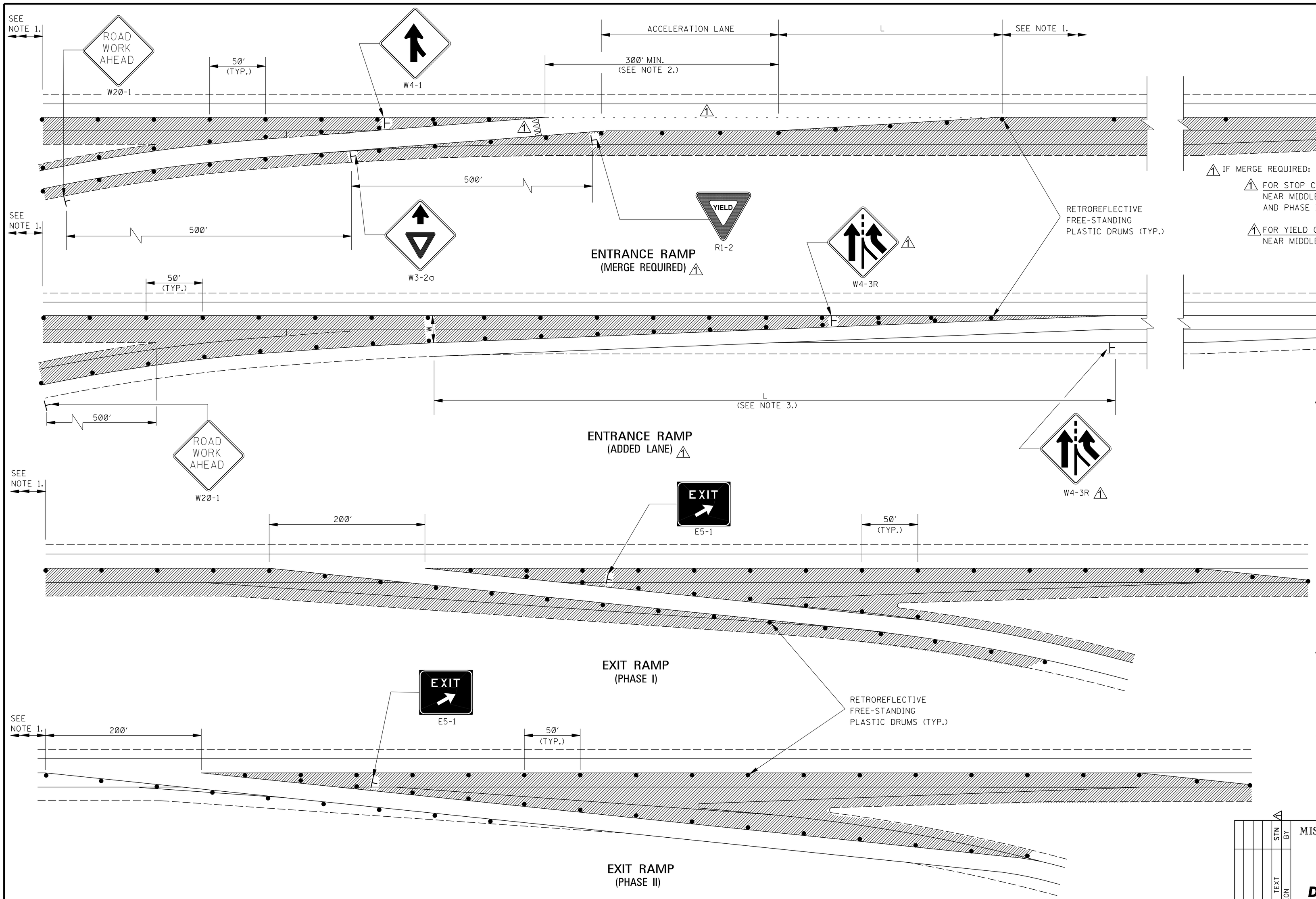

1 IF MERGE REQUIRED:

1 FOR STOP CONDITION: PLACE CHANGEABLE MESSAGE SIGN (CMS) NEAR MIDDLE OF RAMP SHOWING PHASE 1 MESSAGE "STOP AHEAD" AND PHASE II MESSAGE "NO MERGE AREA".

1 FOR YIELD CONDITION: PLACE CHANGEABLE MESSAGE SIGN (CMS) NEAR MIDDLE OF RAMP SHOWING MESSAGE "YIELD AHEAD".

GENERAL NOTES:

1 1. FOR SIGNING, FLASHING ARROW BOARD, AND DRUM SPACING CRITERIA, SEE TYPICAL TRAFFIC CONTROL PLANS FOR LANE CLOSURES ON SHEETS TCP-2, TCP-3, TCP-4, AND TCP-5 AS APPROPIATE.

1 2. WHEN USED, THE YIELD SIGN SHOULD BE LOCATED SO THAT RAMP VEHICULAR TRAFFIC HAS ADEQUATE SIGHT DISTANCE OF ONCOMING MAINLINE VEHICULAR TRAFFIC TO SELECT AN ACCEPTABLE GAP IN THE MAINLINE VEHICULAR TRAFFIC FLOW, BUT SHOULD NOT BE LOCATED SO FAR FORWARD THAT MOTORISTS WILL BE ENCOURAGED TO STOP IN THE PATH OF THE MAINLINE TRAFFIC. ALSO, A LONGER ACCELERATION LANE SHOULD BE PROVIDED BEYOND THE SIGN TO REDUCE THE GAP SIZE NEEDED. IF SUFFICIENT GAPS ARE NOT AVAILABLE, CONSIDERATION SHOULD BE GIVEN TO CLOSING THE RAMP.

1 3. IF NO ACCELERATION LANE EXISTS FOR THE TEMPORARY ENTRANCE, THE YIELD SIGN (R1-2) AND THE YIELD AHEAD SIGN (W3-2) SHALL BE REPLACED WITH A STOP SIGN (R1-1) AND A STOP AHEAD SIGN (W3-1), ONE ON EACH SIDE OF APPROACH. WHERE STOP SIGNS ARE USED, A TEMPORARY STOP LINE SHOULD BE PLACED ACROSS THE RAMP AT THE DESIRED STOP LOCATION.

1 4. WHERE THE ACCELERATION DISTANCE IS SIGNIFICANTLY REDUCED, A SUPPLEMENTAL PLAQUE MAY BE PLACED BELOW THE YIELD AHEAD SIGN READING NO MERGE AREA.

1 5. DETERMINE TAPER LAYOUTS USING THE FOLLOWING EQUATIONS:
$L = WS$ FOR SPEED OF 45 mph OR GREATER
$L = WS^2/60$ FOR SPEEDS OF 40 mph OR LESS
WHERE:
L = MINIMUM LENGTH OF TAPER IN FEET
W = WIDTH OF OFFSET IN FEET
S = DESIGN SPEED OR 85TH PERCENTILE SPEED IN MILES PER HOUR

1 6. ALL TRAFFIC CONTROL ITEMS SHOWN ON THIS SHEET WILL NOT BE MEASURED FOR SEPARATE PAYMENT. THIS WORK SHALL BE INCLUDED IN THE PRICE BID FOR MAINTENANCE OF TRAFFIC.

DATE	REVISION	BY
12/11/25	REVISED TEXT	STN

MISSISSIPPI DEPARTMENT OF TRANSPORTATION
ROADWAY DESIGN DIVISION
STANDARD PLAN

DETAILS OF OUTSIDE LANE CLOSURE AT EXIT AND ENTRANCE RAMPS

MDOT MISSISSIPPI DEPARTMENT OF TRANSPORTATION

WORKING NUMBER
TCP-10

ISSUE DATE: AUGUST 01, 2017

SHEET NUMBER
6360

STATE	PROJECT NO.
MISS.	

ADDENDUM

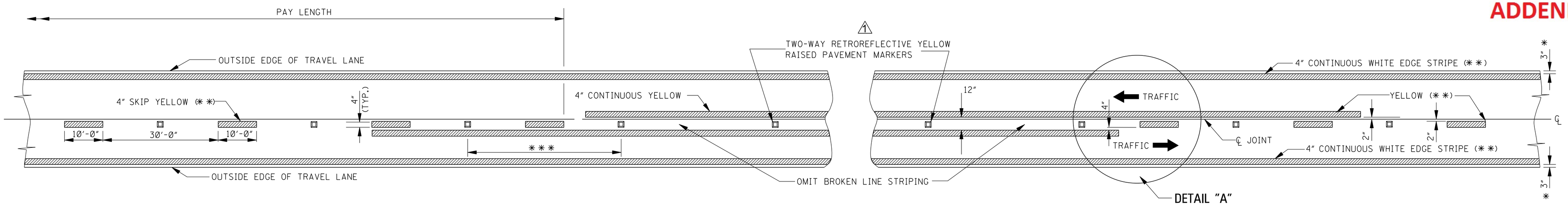

TWO–WAY TRAFFIC
(ASPHALT OR CONCRETE PAVEMENT)

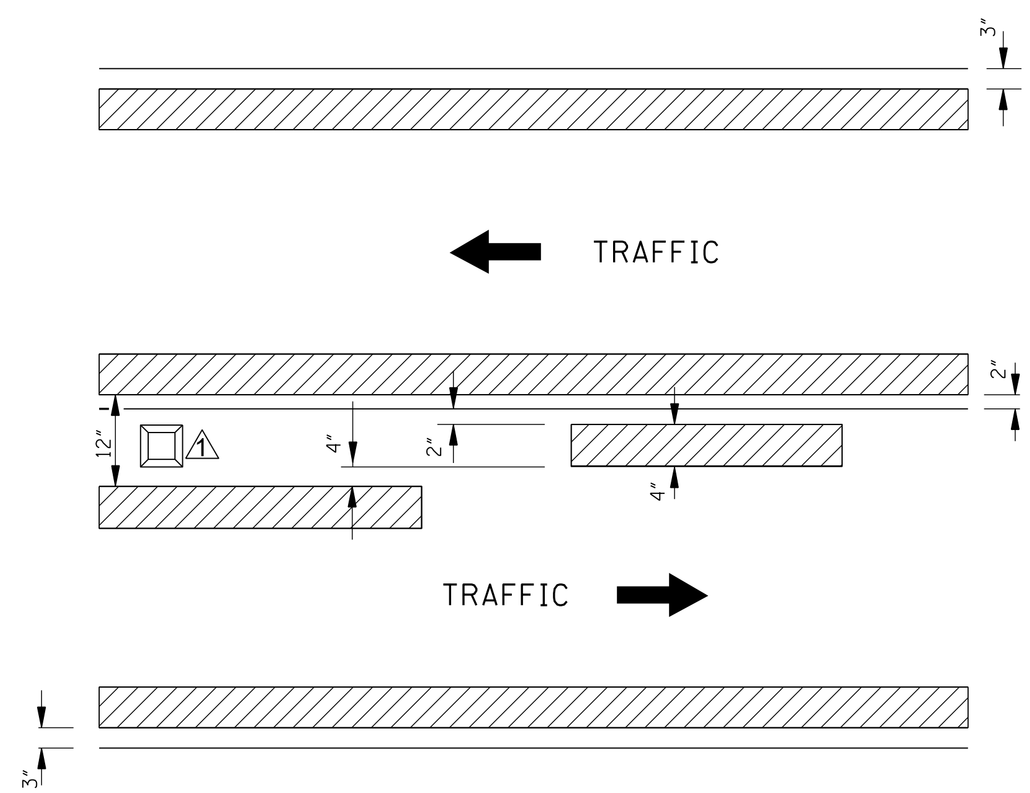

DETAIL "A"

DIRECTION OF TRAFFIC

GENERAL NOTES:

✱ 1. 3" UNLESS SHOWN ELSEWHERE ON THE PLANS.

✱✱ 2. EDGE STRIPE SHALL BE SAME MATERIAL AS LANE-LINE STRIPE (PAINT OR TAPE AS INDICATED IN PAY ITEMS).

△1 3. RETROREFLECTIVE RAISED PAVEMENT MARKERS TO BE USED IF TEMPORARY MARKINGS ARE TO REMAIN IN PLACE OVER 3 MONTHS

△1 ✱✱✱ 4. SPACING OF RETROREFLECTIVE RAISED PAVEMENT MARKERS IS AS FOLLOWS:

	URBAN AREA (ft-in)	RURAL AREA (ft-in)
TANGENT SECTIONS	40'-0"	80'-0"
HORIZONTAL CURVES	40'-0"	40'-0"
INTERCHANGE LIMITS	40'-0"	† 40'-0"

△1 † NOTE: ON THE MAIN FACILITY, RETROREFLECTIVE RED-CLEAR RAISED PAVEMENT MARKERS ON A 40'-0" SPACING WILL BE REQUIRED ON LANE-LINE(S) THROUGH ALL INTERCHANGE AREAS BEGINNING 1000' IN ADVANCE (IN DIRECTION OF TRAFFIC) OF THE EXIT RAMP TAPER AND CONTINUING THROUGH THE INTERCHANGE TO THE END OF THE ENTRANCE RAMP TAPER.

△1 5. PAVEMENT MARKERS SHALL BE HIGH PERFORMANCE RETROREFLECTIVE RAISED PAVEMENT MARKERS FROM THE MDOT "APPROVED PRODUCTS LIST".

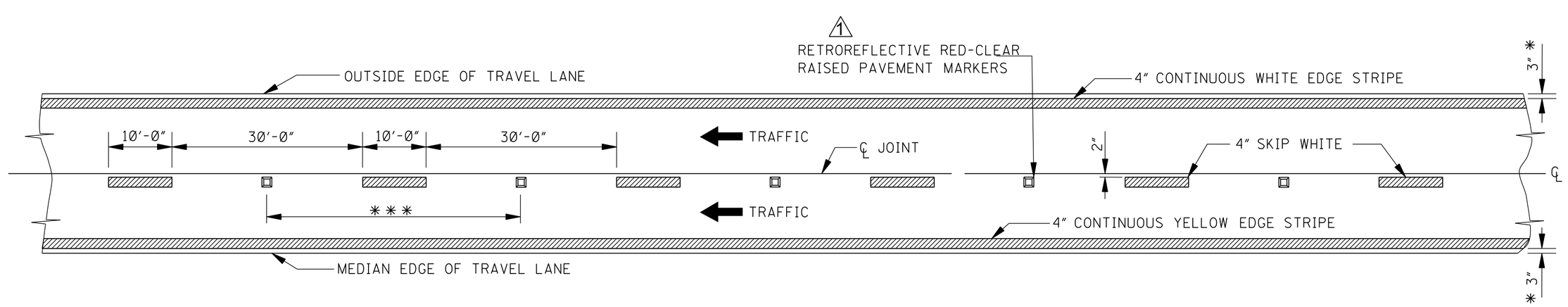

4–LANE WITH ONE–WAY TRAFFIC

DATE	REVISION	BY
12/11/25	REVISED TEXT	STN

MISSISSIPPI DEPARTMENT OF TRANSPORTATION
ROADWAY DESIGN DIVISION
STANDARD PLAN

TEMPORARY STRIPING FOR TRAFFIC CONTROL 2–LANE AND 4–LANE DIVIDED HIGHWAYS

MDOT MISSISSIPPI DEPARTMENT OF TRANSPORTATION

WORKING NUMBER TCP-13

ISSUE DATE: AUGUST 01, 2017

SHEET NUMBER 6363

STATE	PROJECT NO.
MISS.	

ADDENDUM

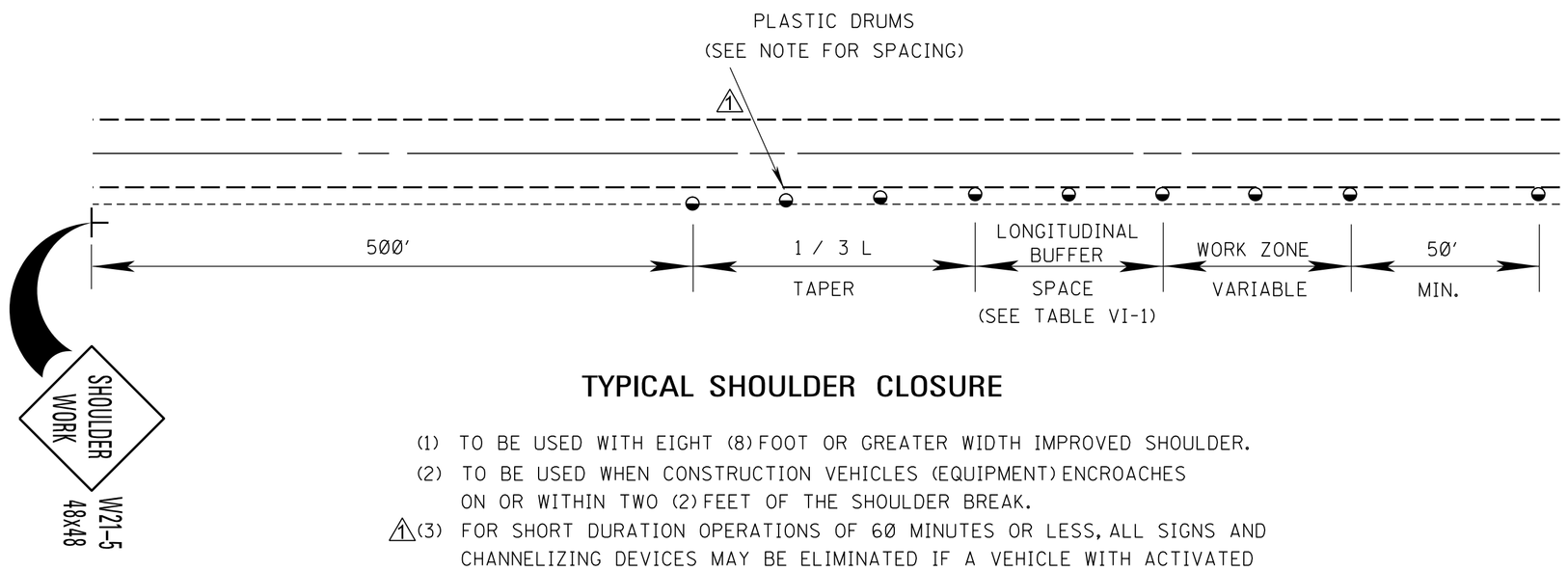

TYPICAL SHOULDER CLOSURE

(1) TO BE USED WITH EIGHT (8) FOOT OR GREATER WIDTH IMPROVED SHOULDER.
(2) TO BE USED WHEN CONSTRUCTION VEHICLES (EQUIPMENT) ENCROACHES ON OR WITHIN TWO (2) FEET OF THE SHOULDER BREAK.
△1 (3) FOR SHORT DURATION OPERATIONS OF 60 MINUTES OR LESS, ALL SIGNS AND CHANNELIZING DEVICES MAY BE ELIMINATED IF A VEHICLE WITH ACTIVATED HIGH-INTENSITY ROTATING, FLASHING, OSCILLATING, OR STROBE LIGHTS IS USED.

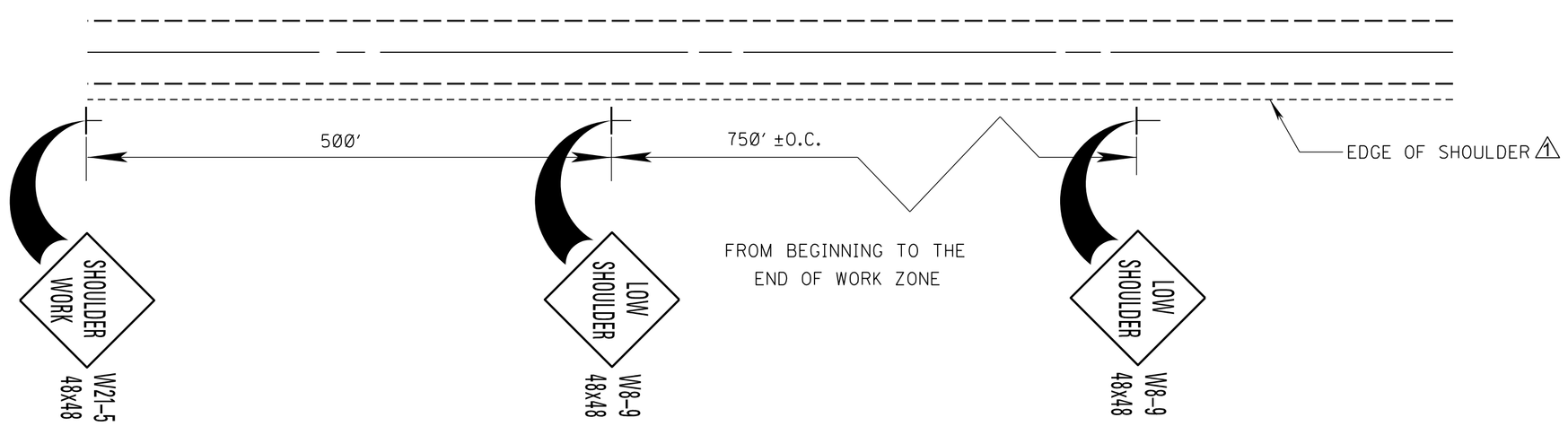

TYPICAL SHOULDER WORK #1
(SEE NOTE A–1 THIS SHEET)

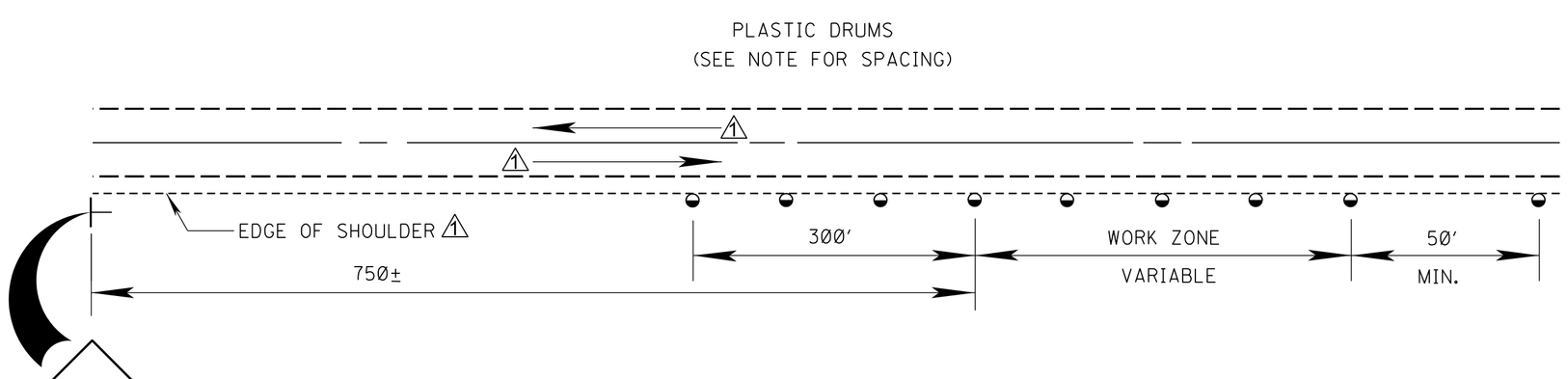

TYPICAL SHOULDER WORK #2

NOTE:
WORK OUTSIDE TWO (2) FOOT AND WITHIN TEN (10) FEET OF THE SHOULDER BREAK MAY BE PROTECTED BY PLACING DRUMS ALONG THE SHOULDER EDGE, 300 FEET PRIOR TO AND 50 FEET BEYOND THE WORK AREA, OR SEE NOTE A-3 THIS SHEET.

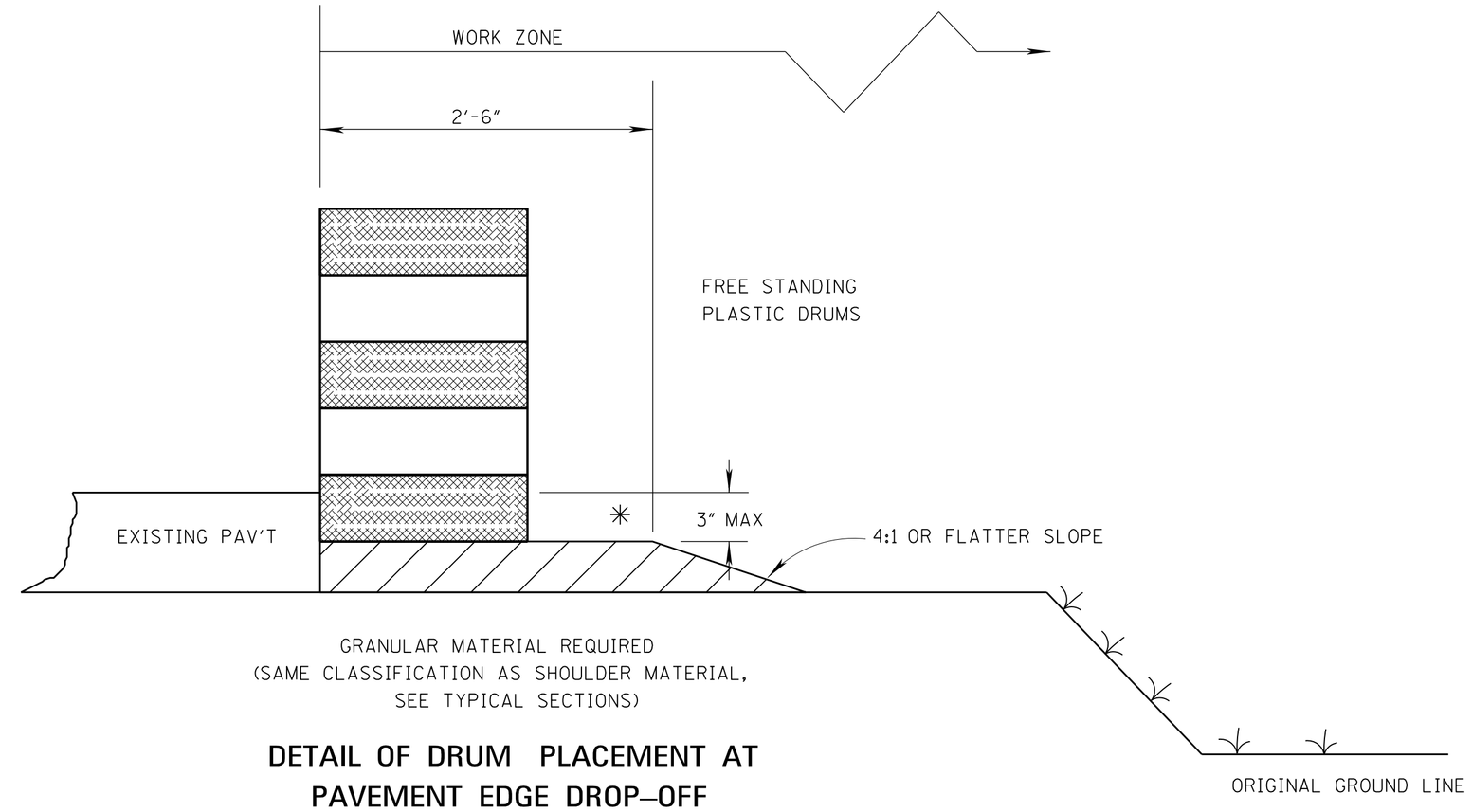

DETAIL OF DRUM PLACEMENT AT PAVEMENT EDGE DROP–OFF

NOTES:

✳ A. PAVEMENT EDGE DROP-OFF

1. IF LESS THAN TWO AND ONE QUARTER (2.25) INCHES-NO PROTECTION REQUIRED. PLACE A SHOULDER WORK SIGN (W21-5) 500 FEET IN ADVANCE OF WORK ZONE SHOULDER AND A LOW SHOULDER SIGN (W8-9) AT THE BEGINNING AND THROUGHOUT THE WORK ZONE @ (750′+O.C.).

△1 2. TWO AND ONE QUARTER TO THREE INCHES-PLACE DRUMS, VERTICAL PANELS OR BARRICADES EVERY 100 FEET ON TANGENT SECTIONS FOR SPEEDS OF 50 MILES PER HOUR OR GREATER. CONES MAY BE USED IN PLACE OF DRUMS, PANELS, AND BARRICADES DURING DAYLIGHT HOURS. FOR TANGENT SECTIONS WITH SPEEDS LESS THAN 50 MILES PER HOUR AND FOR CURVES, DEVICES SHOULD BE PLACED EVERY 50 FEET. SPACING FOR TAPERS SHOULD BE IN ACCORDANCE WITH THE MUTCD (1 / 3 L, WHERE L IS THE TAPER LENGTH IN FEET.)

3. GREATER THAN THREE (3) INCHES-POSITIVE SEPARATION OR WEDGE WITH 4:1 OR FLATTER SLOPE NEEDED. IF THERE IS EIGHT (8) FEET OR MORE DISTANCE BETWEEN THE EDGE OF TRAVEL LANE AND DROP-OFF, THEN DRUMS, PANELS OR BARRICADES MAY BE USED.

4. FOR TEMPORARY CONDITIONS, DROP-OFFS GREATER THAN THREE (3) INCHES MAY BE PROTECTED WITH DRUMS, VERTICAL PANELS OR BARRICADES FOR SHORT DISTANCES DURING DAYLIGHT HOURS WHILE WORK IS BEING DONE IN THE DROP-OFF AREA.

5. LESSER TREATMENTS THAN THOSE DESCRIBED ABOVE MAY BE CONSIDERED FOR LOW-VOLUME LOCAL STREETS.

△1 B. DRUM, VERTICAL PANEL, OR BARRICADE SPACING

1. TANGENTS = 2 X S
2. TAPERS = L / 3
   WHERE L = S X W
   L = TAPER LENGTH IN FEET
△1 S = SPEED IN MPH (POSTED OR ANTICIPATED OPERATING SPEED)
   W = WIDTH OF OFFSET IN FEET

C. ALL TRAFFIC CONTROL ITEMS SHOWN ON THIS SHEET SHALL BE PAID FOR UNDER MAINTENANCE OF TRAFFIC.

TABLE VI-1. GUIDELINES FOR LENGTH OF LONGITUDINAL BUFFER SPACE

✳✳ SPEED (MPH)	LENGTH (FEET)	
20	115	△1
25	155	△1
30	200	△1
35	250	△1
40	305	△1
45	360	△1
50	425	△1
55	495	△1
60	570	△1
65	645	△1

✳✳ POSTED SPEED, OFF-PEAK 85 PERCENTILE SPEED PRIOR TO WORK STARTING, OR THE ANTICIPATED OPERATING SPEED IN MPH.

DATE	REVISION	BY
12/11/25	REVISED TEXT	STN

MISSISSIPPI DEPARTMENT OF TRANSPORTATION
ROADWAY DESIGN DIVISION
STANDARD PLAN

TRAFFIC CONTROL DETAILS DRUM PLACEMENT AND SHOULDER CLOSURE

MDOT MISSISSIPPI DEPARTMENT OF TRANSPORTATION

WORKING NUMBER TCP-16

ISSUE DATE: AUGUST 01, 2017

SHEET NUMBER 6366