SECTION 905 -- PROPOSAL (CONTINUED)

I (We) hereby certify by digital signature and electronic submission via Bid Express of the Section 905 proposal below, that all certifications, disclosures and affidavits incorporated herein are deemed to be duly executed in the aggregate, fully enforceable and binding upon delivery of the bid proposal. I (We) further acknowledge that this certification shall not extend to the bid bond or alternate security which must be separately executed for the benefit of the Commission. This signature does not cure deficiencies in any required certifications, disclosures and/or affidavits. I (We) also acknowledge the right of the Commission to require full and final execution on any certification, disclosure or affidavit contained in the proposal at the Commission's election upon award. Failure to so execute at the Commission's request within the time allowed in the Standard Specifications for execution of all contract documents will result in forfeiture of the bid bond or alternate security.

Bidder acknowledges receipt of and has added to and made a part of the proposal and contract documents the following addendum (addenda):

ADDENDUM NO.	1	DATED	3/23/2026	ADDENDUM NO.		DATED	
ADDENDUM NO	2	DATED	4/22/2026	ADDENDUM NO.		DATED	
ADDENDUM NO		DATED		ADDENDUM NO.		DATED	

Number	Description
1	Revised NTB No. 7695; Section 00 01 10 replaced with same; Section 00 22 13 replaced with same; amendment EBSX Download Required.
2	Revised Table of Contents; Revised SP No. 907-242-14: Section 00 01 10 replaced with same; Added Section 00 31 26; Section 00 91 13 replaced with same; Section 01 21 00 replaced with same; Section 01 25 00 replaced with same; Section 01 33 00 replaced with same; Section 01 60 00 replaced with same; Added Section 08 33 00; Section 08 71 00 replaced with same; Section 09 66 23 replaced with same; Section 11 40 00 replaced with same; Section 22 42 13 replaced with same; Added Section 28 23 00; Added Section 33 13 01; Section 44 41 13.16 replaced with same; Revised Bid Items; Revised or Added Plan Sheet Nos. 4,11-15,35,61,63,65-66,68,70,72,75,8500-8502,8601-8602,8612,8701,8704,8713-8714,8801,8807,8810-8811,8815,8819 & 8822; Amendment EBSx Download Required.

TOTAL ADDENDA: 2
(Must agree with total addenda issued prior to opening of bids)

Respectfully Submitted,

DATE _____

_____
Contractor

BY _____
Signature

TITLE _____

ADDRESS _____

CITY, STATE, ZIP _____

PHONE _____

FAX _____

E-MAIL _____

(To be filled in if a corporation)

Our corporation is chartered under the Laws of the State of _____ and the names, titles and business addresses of the executives are as follows:

_____
President — Address

_____
Secretary — Address

_____
Treasurer — Address

The following is my (our) itemized proposal.

STBG-0010-01(180)/ 109171301000

Jackson County(ies)

Revised 01/26/2016

For Informational Purposes Only

MISSISSIPPI DEPARTMENT OF TRANSPORTATION
TABLE OF CONTENTS

PROJECT: STBG-0010-01(180)/109171301 - Jackson

Section 901 - Advertisement

Section 904 - Notice to Bidders

#1	Governing Specification, w/ Supplement
#2	Status of ROW, w/ Attachments
#296	Reduced Speed Limit Signs
#445	Mississippi Agent or Qualified Nonresident Agent
#516	Errata and Modifications to the 2017 Standard Specifications
#757	Additional Erosion Control Requirements
#1225	Early Notice to Proceed
#1226	Material Storage Under Bridges
#1241	Fuel and Material Adjustments
#1434	Erosion Control Plan
#2172	App for Storm Water Reports
#2206	MASH Compliant Devices
#2273	Mississippi Special Fuel Tax Law
#2954	Reflective Sheeting for Signs
#3676	Asphalt Gyratory Compactor Internal Angle Calibration
#4113	Unique Entity ID Requirement For Federal Funded Projects
#4638	Storm Water Discharge Associated with Construction Activity (> 5 Acres)
#4702	App for Traffic Control Report
#5086	Detail of Square Tube Sign Posts
#5551	Federal Bridge Formula
#5570	Special Provisions Related to Concrete
#7304	Erosion Control Contract Compliance
#7578	Obligation Date
#7693	Contract Time
#7694	Specialty Items
#7695	Pre-Bid Conference

906 Required Federal Contract Provisions -- FHWA 1273, w/Supplements

Section 907 - Special Provisions

907-101-1	Definitions and Terms
907-102-2	Bidding Requirements and Conditions
907-104-2	Minor Alterations to the Contract
907-105-2	Control of Work
907-106-4	Control of Materials
907-107-2	Contractor's Erosion Control Plan
907-108-4	Subletting of Contract
907-108-6	Default and Termination of Contract
907-109-5	Measurement and Payment
907-234-1	Silt Fence
907-240-2	Interlocking Flexible Block Erosion Control System
907-242-14	Jackson County Welcome Center

PROJECT: STBG-0010-01(180)/109171301 - Jackson

907-260-1	Utility Work - Sewer
907-262-1	Utility Work - Water
907-282-3	Irrigation System
907-290-2	Flagpole
907-401-3	Asphalt Pavement - General
907-403-4	Asphalt Pavements
907-601-1	Structural Concrete
907-605-1	Underdrains
907-608-2	Detectable Warning Panels
907-616-1	Colored and Imprinted Concrete Median and Island Pavement
907-618-12	Traffic Control Management
907-619-5	Traffic Control for Construction Zones
907-626-12	Thermoplastic Traffic Markings
907-627-1	Raised Pavement Markings
907-628-6	Cold Plastic Pavement Markings
907-630-1	Remove and Reset Signs
907-700-2	Materials and Tests
907-701-4	Hydraulic Cement, w/ Supplement
907-702-4	Bituminous Materials
907-703-2	Gradation
907-705-1	Stone Riprap
907-707-3	Joint Materials
907-708-4	Concrete Pipe
907-711-2	Plain Steel Wire
907-712-1	Fence and Guardrail
907-714-4	Miscellaneous Materials
907-718-1	Timber and Dimension Lumber
907-720-4	Pavement Marking Materials
907-721-4	Materials for Signing

Section 905 - Proposal, Proposal Bid Items, Combination Bid Proposal
Certification of Performance - Prior Federal-Aid Contracts
Certification Regarding Non-Collusion, Debarment and Suspension
SAM.GOV Registration and Unique Entity ID
Section 902 - Contract Form
Section 903 - Contract Bond Forms

(REVISIONS TO THE ABOVE WILL BE INDICATED ON THE SECOND SHEET OF SECTION 905 AS ADDENDA)

04/21/2026 03:06 PM

00 01 10
PROJECT MANUAL TABLE OF CONTENTS

PROJECT: I-10 JACKSON COUNTY WELCOME CENTER
JACKSON COUNTY, MISSISSIPPI

PROJECT NUMBER: STBG-0010-01(180)

PROCUREMENT AND CONTRACTING REQUIREMENTS GROUP

Division 0 – General Information

Section 00 01 07 – Seals Page
Section 00 01 10 – Table of Contents Replaced with Addendum #2
Section 00 01 15 – List of Drawing Sheets

Division 0 – Bidding Requirements

Section 00 21 13 – Instructions to Bidders
Section 00 22 13 – Supplementary Instructions to Bidders
Section 00 25 13 – Pre-Bid Meetings
Section 00 31 26 – Existing Hazardous Material Information Added in Addendum #2
- **Asbestos Report**

Section 00 31 32 – Geotechnical Data
- Geotechnical Report

Division 0 – Contracting Requirements

Section 00 72 00 – AIA Document A201 – 2007 General Conditions
Section 00 91 13 - Addendum

SPECIFICATIONS GROUP
GENERAL REQUIREMENTS SUBGROUP

Division 1 – General Requirements

Section 01 10 00 – Summary
Section 01 21 00 – Allowances Replaced with Addendum #2
Section 01 25 00 - Substitution Procedures Replaced with Addendum #2
Section 01 26 00 - Contract Modification Procedures
Section 01 29 00 - Payment Procedures Modified in Addendum #2
Section 01 31 00 - Project Management and Coordination
Section 01 31 23 – Project Website
Section 01 32 00 - Construction Progress Documentation
Section 01 32 33 - Photographic Documentation
Section 01 33 00 - Submittal Procedures Replaced with Addendum #2
Section 01 33 00.1 – Domestic Materials – Self Certification Form AASHTO
Section 01 40 00 - Quality Requirements
Section 01 42 00 - References

Section 01 43 39 – Mockup Requirements
Section 01 45 10 – Construction Quality Control
Section 01 45 29 - Testing Laboratory Services
Section 01 50 00 - Temporary Facilities and Controls
Section 01 60 00 - Product Requirements Replaced with Addendum #2
Section 01 73 00 - Execution
Section 01 74 19 - Construction Waste Management and Disposal
Section 01 77 00 - Closeout Procedures
Section 01 78 23 - Operation and Maintenance Data
Section 01 78 39 - Project Record Documents
Section 01 91 13 - Commissioning

Division 2 – Site Construction

- Refer to MDOT Standard Specifications and Special Provisions Contained Elsewhere in this Contract.

Division 3 – Concrete
Section 03 12 10 – Formliners for Architectural Concrete
Section 03 30 00 – Cast-in-Place Concrete
Section 03 31 26 – Self-Consolidating Concrete (SCC)

Division 4 – Masonry
Section 04 22 00 – Concrete Unit Masonry
Section 04 22 23 – Architectural Unit Masonry
Section 04 72 00 – Cast Stone Masonry

Division 5 – Metals
Section 05 12 00 – Structural Steel Framing
Section 05 31 00 – Steel Decking
Section 05 41 00 – Cold Formed Steel Stud Framing
Section 05 50 00 – Metal Fabrications
Section 05 73 00 – Decorative Metal Railings

Division 6 – Wood and Plastics
Section 06 06 60 – Translucent Resin Panel System
Section 06 10 00 – Rough Carpentry
Section 06 17 13 – Glue Laminated Construction
Section 06 17 19 – Cross Laminated Timber Decking
Section 06 20 23 – Interior Finish Carpentry
Section 06 30 23 – Wood Veneer Faced Panels
Section 06 40 23 – Interior Architectural Woodwork

Division 7 – Thermal and Moisture Protection
Section 07 14 30 – Liquid Applied Waterproofing
Section 07 19 00 – Water Repellents
Section 07 21 00 – Thermal Insulation
Section 07 23 00 – Spray Applied Insulation
Section 07 26 00 – Vapor Retarders
Section 07 41 13 – Standing Seam Metal Roof Panels
Section 07 42 00 – Aluminum Composite Wall Panels
Section 07 62 00 – Sheet Metal Flashing and Trim
Section 07 92 00 – Joint Sealants

Division 8 – Openings
Section 08 11 13 – Hollow Metal Doors and Frames
Section 08 14 13 – Painted Flush Wood Doors
Section 08 31 00 – Access Doors and Panels
Section 08 33 00 – Rolling Doors – Service Doors ** Added in Addendum #2
Section 08 36 00 – Sectional Overhead Doors
Section 08 41 13 – Aluminum Framed Entrances and Storefronts
Section 08 71 00 – Door Hardware Replaced with Addendum #2
Section 08 80 00 – Glazing
Section 08 90 00 – Cantilevered Sunshades
Section 08 91 00 – Louvers
***** Prepared by Neel Schaffer, Inc.***

Division 9 – Finishes
Section 09 22 16 – Non-Structural Metal Framing
Section 09 29 00 – Gypsum Board
Section 09 30 00 – Tiling
Section 09 51 13 – Acoustical Panel Ceilings
Section 09 65 10 – Resilient Tile Flooring
Section 09 66 23 – Epoxy Terrazzo Replaced with Addendum #2
Section 09 68 13 – Carpeting
Section 09 72 00 – Digitally Printed Wall Cladding
Section 09 80 13 – Acoustical Treatment
Section 09 90 00 – Painting and Coating
Section 09 91 00 – Painting **
Section 09 96 00 – High Performance Coatings
Section 09 96 53 – Elastomeric Coatings
Section 09 97 23 – Concrete Sealer
*** Prepared by Neel Schaffer, Inc.*

Division 10 – Specialties
Section 10 11 00 – Visual Display Boards
Section 10 14 00 – Signage and Graphics
Section 10 21 13 – Phenolic Toilet Compartments
Section 10 28 00 – Toilet and Bath Accessories Modified in Addendum #2
Section 10 30 00 – Passive Wall Ventilation Accessories
Section 10 44 13 – Fire Extinguisher Cabinets
Section 10 82 11 – Architectural Coiled Wire Grilles and Screens

Division 11 – Equipment
Section 11 40 00 – Food Service Equipment Replaced with Addendum #2

Division 12 – Furnishings
Section 12 48 00 – Entrance Floor Grilles
Section 12 49 40 – Roller Shades
Section 12 50 00 - Furniture
Section 12 93 00 – Site Furnishings Modified in Addendum #2

Division 13 – Special Construction
Section 13 14 22 – Pre-Engineered Structures
Section 13 21 13 – Plant Building **
*** Prepared by Neel Schaffer, Inc.*

Division 14 – Conveying Equipment
Not a part of these specifications

Division 21 – Fire Suppression
Section 21 01 00 – Fire Protection General Provisions
Section 21 13 13 – Automatic Sprinkler Systems
Section 21 31 13 – Electric-Drive Centrifugal Fire Pump **
Section 21 41 23 – Ground Storage Tanks for Fire-Suppression Water **
*** Prepared by Neel Schaffer, Inc.*

Division 22 – Plumbing
Section 22 01 00 – Plumbing General Provisions
Section 22 07 19 – Plumbing Insulation
Section 22 11 16 – Domestic Water Piping and Valves
Section 22 11 19 – Domestic Water Backflow Preventers, Trap Primers, and Shock Absorbers
Section 22 11 23 – Domestic Water Pumps
Section 22 13 16 – Sanitary Waste and Vent Piping
Section 22 13 19 – Sanitary Waste Piping Specialties
Section 22 33 30 – Residential, Storage Electric Domestic Water Heaters
Section 22 33 35 – Water Heater, Electric Instantaneous
Section 22 42 13 – Commercial Plumbing Fixtures Replaced with Addendum #2

Division 23 – Heating, Ventilating, And Air Conditioning
Section 23 01 00 – General Provisions of HVAC Systems
Section 23 05 13 – Electric Motors
Section 23 05 33 – Electric Heat Tracing
Section 23 05 48 – Vibration Isolation
Section 23 05 49 – Basic Materials and Methods for HVAC
Section 23 05 93 – Testing, Adjusting, and Balancing
Section 23 07 10 – Insulation
Section 23 09 23 – Direct Digital Control Building Automation System (DDC BAS)
Section 23 21 13 – Hydronic Piping
Section 23 21 20 – Hydronic Specialties
Section 23 25 15 – Water Treatment for Closed Hydronic Systems
Section 23 29 23 – Variable Frequency Motor Controllers
Section 23 31 10 – Sheet Metal Ductwork Low Pressure
Section 23 31 11 – Sheet Metal Ductwork Medium Pressure
Section 23 33 10 – Sheet Metal Specialties
Section 23 34 20 – Centrifugal Exhaust Fans
Section 23 34 25 – Propeller Fans
Section 23 34 30 – Ceiling Cabinet Exhaust Fans
Section 23 34 50 – Square Centrifugal In-Line Fans
Section 23 64 20 – Packaged Air-Cooled Chiller Scroll
Section 23 73 13 – Air Handling Unit Medium or Low Pressure
Section 23 82 40 – Electric Heaters
Section 23 82 42 – Electric Duct Heaters

Division 26 – Electrical
Section 26 01 00 – General Provisions for Electrical Systems
Section 26 05 19 – Conductors 600 Volt and Below
Section 26 05 26 – Grounding and Bonding for Electrical Systems
Section 26 05 29 – Supporting Devices and Hangers
Section 26 05 34 – Raceways and Conduit Systems
Section 26 05 37 – Outlet Boxes
Section 26 05 38 – Pull and Junction Boxes
Section 26 05 45 – Pad Transformer Electric Service
Section 26 05 47 – Seismic Restraint of Electrical Equipment and Suspended Utilities
Section 26 24 16 – Panelboards
Section 26 27 26 – Wiring Devices
Section 26 28 18 – Safety Switches
Section 26 29 13 – Individual Starters and Controls
Section 26 32 13 – Diesel Engine Driven Generator Sets System
Section 26 36 00 – Automatic Transfer Switch
Section 26 41 13 – Lightning Protection
Section 26 43 00 – Surge Protective Devices
Section 26 48 00 – Motor Control Center **
Section 26 51 00 – Interior Lighting and Lamps
Section 26 56 00 – Exterior Lighting and Lamps
Section 26 56 10 – Exterior Lighted Bollards
Section 26 68 00 – Water Plant Control Panel **
*** Prepared by Neel Schaffer, Inc.*

Division 27 – Communication Systems
Section 27 00 00 – General Provisions for Communications Work
Section 27 01 05 – Cable Plant
Section 27 05 26 – Grounding and Bonding for Communications
Section 27 05 28 – Firestopping for Communications
Section 27 10 08 – MATV Antenna Cable System
Section 27 15 00 – Structured Voice and Data Cabling Infrastructure
Section 27 37 00 – Low Voltage Rough-In Specifications
Section 27 41 00 – Direct View LED Display System Modified in Addendum #2

Division 28 – Safety & Security Systems
Section 28 23 00 – Video Surveillance Added in Addendum #2
Section 28 31 00 – Fire Alarm System

Division 31 – Earthwork
Section 31 23 22 - Excavation and Fill for Structures
Section 31 23 19 – Dewatering **
Section 31 23 33 – Earthwork, Excavation and Backfill for Utilities **
Section 31 31 16 – Termite Control
*** Prepared by Neel Schaffer, Inc.*

- Refer to MDOT Standard Specifications and Special Provisions Contained Elsewhere in this Contract.

Division 32 – Exterior Improvements
Section 32 31 19 – Ornamental Steel Gate System

- Refer to MDOT Standard Specifications and Special Provisions Contained Elsewhere in this Contract for Landscaping and Irrigation.

Division 33 – Utilities

Section 33 05 23.16 – Cased Crossings **
Section 33 11 00 – Pipe Installation **
Section 33 11 13 – Water Distribution Pipe **
Section 33 12 16 – Water Valves and Appurtenances **
Section 33 13 01 – Disinfection Chemical System Added in Addendum #2**
Section 33 16 13.14 – Hydropneumatic Tank **
Section 33 21 13 – Public Water Supply Well **
Section 33 31 13 – Sanitary Sewer Pipe **
Section 33 31 14 – Sewer Valves and Appurtenances **
Section 33 32 16.13 – Packaged Sewage Grinder Pumping Stations **
Section 33 39 13 – Precast Concrete Manholes & Wetwells **
Section 33 39 14 – Castings for Precast Concrete Manholes and Wetwells **
*** Prepared by Neel Schaffer, Inc.*

Division 44 – Pollution and Waste Control

Section 44 41 13.16 – Packaged Biological Wastewater Treatment Plant ** **Replaced with Addendum #2**
Section 44 41 13.22 – Nanofiltration Membrane Water Treatment Equipment **
*** Prepared by Neel Schaffer, Inc.*

END OF SECTION

DOCUMENT 00 31 26 EXISTING HAZARDOUS MATERIAL INFORMATION

1.01 EXISTING HAZARDOUS MATERIAL INFORMATION

A. This Document with its referenced attachments, A Report for a NESHAP Survey for Asbestos-Containing Materials of the I-10 Jackson County Welcome Center Project No. STBG-0010-01(180)/109171-101000 Jackson County, Moss Point, Mississippi, prepared by SEMS, Inc. on April 29, 2025, is part of the Procurement and Contracting Requirements for Project. They provide Owner's information for Bidders' convenience and are intended to supplement rather than serve in lieu of Bidders' own investigations. They are made available for Bidders' convenience and information, but are not a warranty of existing conditions. This Document and its attachments are not part of the Contract Documents.

B. Related Requirements:

1. Document 00 21 13 "Instructions to Bidders" for the Bidder's responsibilities for examination of Project site and existing conditions.
2. Document 00 31 32 "Geotechnical Data" for reports and soil-boring data from geotechnical investigations that are made available to bidders.

END OF DOCUMENT

SEMS Inc.
Southern Environmental Management & Specialties

A REPORT FOR A NESHAP SURVEY
FOR

ASBESTOS-CONTAINING MATERIALS

OF THE

I-10 Jackson County Welcome Center
Project No. STBG-0010-01(180)/109171-101000
Jackson County, Moss Point, Mississippi

Work Assignment No. SEMS-ASB 2024-01

FOR

THE MISSISSIPPI DEPARTMENT OF TRANSPORTATION (MDOT)
P. O. BOX 1850
JACKSON, MISSISSIPPI 39215

Prepared on:

April 29, 2025

SEMS Project No. 1926-0002

Prepared by:
Mark R. Walters, Project Manager

Reviewed by:
Joseph M. Drapala, CIH, CHMM, CIEC, Point of Contact

	160 Upton Drive Jackson, MS 39209		601.922.0766		info@semsinc.net www.semsinc.net

A REPORT FOR A NESHAP SURVEY

FOR

ASBESTOS-CONTAINING MATERIALS

OF THE

I-10 Jackson County Welcome Center
Project No. STBG-0010-01(180)/109171-101000
Jackson County, Moss Point, Mississippi

Work Assignment No. SEMS-ASB 2024-01

FOR

THE MISSISSIPPI DEPARTMENT OF TRANSPORTATION (MDOT)
P. O. BOX 1850
JACKSON, MISSISSIPPI 39215

Prepared by:

Southern Environmental Management & Specialties, Inc.
160 Upton Drive
Jackson, Mississippi 39209
(601) 922-0766

SEMS Report No. 25.1926-0002
April 29, 2025

TABLE OF CONTENTS

Page

EXECUTIVE SUMMARY ii

1.0 PURPOSE AND SCOPE OF SERVICES 1

2.0 SITE DESCRIPTION 2

3.0 DISCUSSION OF SAMPLING RESULTS 4
- 3.1 Asbestos-Containing Materials: Friable 4
- 3.2 Asbestos-Containing Materials: Non-Friable 4
- 3.3 Non-Asbestos-Containing Materials 6

4.0 SUMMARY OF RECOMMENDATIONS 12

5.0 QUALIFYING STATEMENT 13

APPENDICES:

- Appendix A: Professional Credentials
- Appendix B: Laboratory Analytical Results, Bulk Asbestos Report

EXECUTIVE SUMMARY

Southern Environmental Management & Specialties, Inc., (SEMS, Inc.) was retained by The Mississippi Department of Transportation (MDOT), Jackson, Mississippi, to conduct a facility survey to identify and sample suspected Asbestos-Containing Materials (ACM) for the I-10 Jackson County Welcome Center, Moss Point, Mississippi.

SEMS collected 44 multi-layer and singular bulk samples from April 8 - 9, 2025 of suspect asbestos-containing materials (ACM) from the interior areas of the building. The samples were collected by Jonathan Muirhead, Inspector I.D. number ABI-00010589, expiration date October 9, 2025. The samples were submitted to EMSL Analytical, Inc., Baton Rouge, Louisiana, for analysis by Polarized Light Microscopy (PLM). The laboratory is accredited under National Voluntary Laboratory Accreditation Program ID Number 200375-0.

Summary of Findings

The following summary of findings is based on the results from the laboratory analysis and field investigation:

Asbestos

1. **SEMS** presents the following table, summarizing the results of the asbestos-containing materials (ACM) survey:

Sample #	Material	Location (Sample Point)	Asbestos Present
MDOT-MWC-001	Column Coating	Porch 123	NAD
MDOT-MWC-002	Wall Brick Mortar	Porch 123	NAD
MDOT-MWC-003	Upper Window Sealant	Porch 123	NAD
MDOT-MWC-004	Column Coating	Porch 126	NAD
MDOT-MWC-005	Wall Brick Mortar	Porch 126	NAD
MDOT-MWC-006	Upper Window Sealant	Porch 126	NAD
MDOT-MWC-007	Column Coating	Porch 125	NAD
MDOT-MWC-008	Wall Brick Mortar	Porch 125	NAD
MDOT-MWC-009	Upper Window Sealant	Porch 125	NAD

Sample #	Material	Location (Sample Point)	Asbestos Present
MDOT-MWC-010	Column Coating	Porch 124	NAD
MDOT-MWC-011	Wall Brick Mortar	Porch 124	NAD
MDOT-MWC-012	Upper Window Sealant	Porch 124	NAD
MDOT-MWC-013	Gray Putty on HVAC Duct	East HVAC & Plumbing Closet	NAD
MDOT-MWC-014	Gray Putty on HVAC Duct	West HVAC & Plumbing Closet	NAD
MDOT-MWC-015	HVAC Bellows	West HVAC & Plumbing Closet	NAD
MDOT-MWC-016	4" Pipe Insulation, Wrap, Brushed on Coating	West HVAC & Plumbing Closet	NAD
MDOT-MWC-017	3" Pipe Insulation & Wrap	West HVAC & Plumbing Closet	NAD
MDOT-MWC-018	2" Pipe Insulation & Wrap	West HVAC & Plumbing Closet	NAD

Sample #	Material	Location (Sample Point)	Asbestos Present
MDOT-MWC-019	Sealant around Column Base	Porch 124	NAD
MDOT-MWC-020	Sealant around Column Base	Porch 126	NAD
MDOT-MWC-021	Flooring Tile	Reception Area	NAD
MDOT-MWC-021A	Flooring Tile (Adhesive)	Reception Area	NAD
MDOT-MWC-022	Joint Compound	Stairs 113	NAD
MDOT-MWC-023	Drywall (Joint Compound Layer)	Stairs 113	NAD
MDOT-MWC-023A	Drywall	Stairs 113	NAD
MDOT-MWC-024	Flooring Tile	Lounge 118	NAD
MDOT-MWC-024A	Flooring Tile (Adhesive)	Lounge 118	NAD

Sample #	Material	Location (Sample Point)	Asbestos Present
MDOT-MWC-025	Insulation	West Attic	NAD
MDOT-MWC-026	Insulation	East Attic	NAD
MDOT-MWC-027	Drywall (Joint Compound Layer)	Storage 201	NAD
MDOT-MWC-027A	Drywall	Storage 201	NAD
MDOT-MWC-028	Joint Compound	Storage 201	NAD
MDOT-MWC-029	Sheet Flooring	Mechanical 202	NAD
MDOT-MWC-030	Sheet Flooring	Janitor Closet 204	NAD
MDOT-MWC-031	Insulation	Attic North	NAD
MDOT-MWC-032	4" Pipe Insulation	Attic East	NAD

Sample #	Material	Location (Sample Point)	Asbestos Present
MDOT-MWC-033	2" Pipe Insulation	Attic East	NAD
MDOT-MWC-034	Grey Putty on HVAC Duct	Mechanical 202	NAD
MDOT-MWC-035	Drywall (Joint Compound Layer)	Ladies Room 101	NAD
MDOT-MWC-035A	Drywall	Ladies Room 101	NAD
MDOT-MWC-036	Ceramic Tile	Ladies Room 101	NAD
MDOT-MWC-036A	Grout	Ladies Room 101	NAD
MDOT-MWC-037	Joint Compound	Ladies Room 101	NAD
MDOT-MWC-038	Ceramic Tile	Men's Room 122	NAD
MDOT-MWC-038A	Grout	Men's Room 122	NAD

Sample #	Material	Location (Sample Point)	Asbestos Present
MDOT-MWC-039	Joint Compound	Men's Room 122	NAD
MDOT-MWC-040	Drywall (Joint Compound Layer)	Men's Room 122	NAD
MDOT-MWC-040A	Drywall	Men's Room 122	NAD
MDOT-MWC-041	Joint Compound	Lounge 118	NAD
MDOT-MWC-042	Drywall (Joint Compound Layer)	Lounge 118	NAD
MDOT-MWC-042A	Drywall	Lounge 118	NAD
MDOT-MWC-043	Wall Brick Mortar	Display 115	NAD
MDOT-MWC-044	Wall Brick Mortar	Reception 111	NAD

NAD = No Asbestos Detected
<1% is defined as non-asbestos containing material

See Appendix B, Laboratory Analytical Results, Bulk Asbestos Report.

Inspection Report Limitations

This inspection report shall not be used as a substitute for asbestos abatement specifications, and are not to be used in formal bid documents as a specification. A specific Division for Asbestos Abatement should accompany this inspection report in formal bid documentation.

Summary of Recommendations:

The following recommendations are made concerning the building materials for the I-10 Jackson County Welcome Center, Moss Point, Mississippi.

1. A ten (10) day "Demolition/Renovation Notification Form" as referenced in 40 CFR Part 61, Subpart M, is required to be submitted to Mississippi Department of Environmental Quality (MDEQ) due to a scheduled demolition or the removal of load-bearing walls regardless of no detection of asbestos in the samples that were collected. This report should be kept on file and a copy at the site during demolition activities in the event inquiries are made concerning ACM in building materials that are being disturbed due to demolition performed on site.

2. **SEMS** makes no further recommendations at this time regarding the study site; however, **SEMS** reserves the right to modify our opinion should additional information, not available during the time of this investigation, be presented to **SEMS.**

1.0 PURPOSE AND SCOPE OF SERVICES

Southern Environmental Management & Specialties, Inc., (SEMS, Inc.) was retained by the Mississippi Department of Transportation (MDOT), P. O. Box 1850, Jackson, Mississippi, to conduct a facility survey to identify and sample suspected Asbestos-Containing Materials (ACM) of the I-10 Jackson County Welcome Center, Moss Point, Mississippi.

Specifically, the scope of services rendered included the following:

Scope of Work:

1. Conduct an inspection of the building interior spaces to survey, identify and sample a statistically valid number of suspect asbestos-containing building materials within the designated project area. Additionally, perform a visual investigation to determine the existing condition of building materials.

2. Conduct analysis on all samples of materials suspected to contain asbestos by utilizing Polarized Light Microscopy (PLM) with dispersion staining techniques performed in accordance with the Environmental Protection Agency (EPA) bulk analysis protocol utilizing EPA Method 600/M4-82-020.

3. Review all field, survey, and analytical data to provide a comprehensive facility assessment.

4. Prepare a final report with observations and recommendations relating to the facility's conditions identified.

2.0 SITE DESCRIPTION

SEMS, under the direction of The Mississippi Department of Transportation (MDOT), Jackson, Mississippi, conducted a site investigation from April 8 – April 9, 2025, to identify and sample suspected Asbestos-Containing Materials (ACM), for the I-10 Jackson County Welcome Center, Moss Point, Mississippi. The inspection was conducted by Jonathan Muirhead, Asbestos Inspector I.D. number ABI-00010589, expiration date October 9, 2025. The suspect ACM samples were submitted to EMSL Analytical, Inc., Baton Rouge, Louisiana, for analysis by PLM.

3.0 DISCUSSION OF SAMPLING RESULTS

SEMS conducted materials sampling for the I-10 Jackson County Welcome Center, Moss Point, Mississippi in accordance with the proposed scope of services. The following suspect materials sampled were analyzed for asbestos.

Surfacing Materials

- Column Coating

Thermal System Insulation

- Insulation
- Pipe Insulation

Miscellaneous

- Flooring and Mastic
- Drywall systems
- Mortar
- Window Sealant
- Misc. Sealant
- Joint Compound
- HVAC Isolation Dampers
- Grout

A total of forty-four (44) multi-layer and singular bulk samples of suspect ACM were collected.

3.1 Asbestos-Containing Materials: Friable

No Friable asbestos-containing materials were found or sampled during this survey.

3.2 Asbestos-Containing Materials: Non-Friable

No Non-Friable asbestos-containing materials were found or sampled during this survey

3.3 Non-Asbestos-Containing Materials

The following table contains the laboratory results for suspect ACM that was sampled and determined to be non-ACM by PLM during this investigation:

Non-Asbestos-Containing Materials

Sample #	Material	Location (Sample Point)	Asbestos Present
MDOT-MWC-001	Column Coating	Porch 123	NAD
MDOT-MWC-002	Wall Brick Mortar	Porch 123	NAD
MDOT-MWC-003	Upper Window Sealant	Porch 123	NAD
MDOT-MWC-004	Column Coating	Porch 126	NAD

Sample #	Material	Location (Sample Point)	Asbestos Present
MDOT-MWC-005	Wall Brick Mortar	Porch 126	NAD
MDOT-MWC-006	Upper Window Sealant	Porch 126	NAD
MDOT-MWC-007	Column Coating	Porch 125	NAD
MDOT-MWC-008	Wall Brick Mortar	Porch 125	NAD
MDOT-MWC-009	Upper Window Sealant	Porch 125	NAD
MDOT-MWC-010	Column Coating	Porch 124	NAD
MDOT-MWC-011	Wall Brick Mortar	Porch 124	NAD
MDOT-MWC-012	Upper Window Sealant	Porch 124	NAD

Sample #	Material	Location (Sample Point)	Asbestos Present
MDOT-MWC-013	Gray Putty on HVAC Duct	East HVAC & Plumbing Closet	NAD
MDOT-MWC-014	Gray Putty on HVAC Duct	West HVAC & Plumbing Closet	NAD
MDOT-MWC-015	HVAC Bellows	West HVAC & Plumbing Closet	NAD
MDOT-MWC-016	4" Pipe Insulation, Wrap, Brushed on Coating	West HVAC & Plumbing Closet	NAD
MDOT-MWC-017	3" Pipe Insulation & Wrap	West HVAC & Plumbing Closet	NAD
MDOT-MWC-018	2" Pipe Insulation & Wrap	West HVAC & Plumbing Closet	NAD
MDOT-MWC-019	Sealant around Column Base	Porch 124	NAD
MDOT-MWC-020	Sealant around Column Base	Porch 126	NAD

Sample #	Material	Location (Sample Point)	Asbestos Present
MDOT-MWC-021	Flooring Tile	Reception Area	NAD
MDOT-MWC-021A	Flooring Tile (Adhesive)	Reception Area	NAD
MDOT-MWC-022	Joint Compound	Stairs 113	NAD
MDOT-MWC-023	Drywall (Joint Compound Layer)	Stairs 113	NAD
MDOT-MWC-023A	Drywall	Stairs 113	NAD
MDOT-MWC-024	Flooring Tile	Lounge 118	NAD
MDOT-MWC-024A	Flooring Tile (Adhesive)	Lounge 118	NAD
MDOT-MWC-025	Insulation	West Attic	NAD

Sample #	Material	Location (Sample Point)	Asbestos Present
MDOT-MWC-026	Insulation	East Attic	NAD
MDOT-MWC-027	Drywall (Joint Compound Layer)	Storage 201	NAD
MDOT-MWC-027A	Drywall	Storage 201	NAD
MDOT-MWC-028	Joint Compound	Storage 201	NAD
MDOT-MWC-029	Sheet Flooring	Mechanical 202	NAD
MDOT-MWC-030	Sheet Flooring	Janitor Closet 204	NAD
MDOT-MWC-031	Insulation	Attic North	NAD
MDOT-MWC-032	4" Pipe Insulation	Attic East	NAD

Sample #	Material	Location (Sample Point)	Asbestos Present
MDOT-MWC-033	2" Pipe Insulation	Attic East	NAD
MDOT-MWC-034	Grey Putty on HVAC Duct	Mechanical 202	NAD
MDOT-MWC-035	Drywall (Joint Compound Layer)	Ladies Room 101	NAD
MDOT-MWC-035A	Drywall	Ladies Room 101	NAD
MDOT-MWC-036	Ceramic Tile	Ladies Room 101	NAD
MDOT-MWC-036A	Grout	Ladies Room 101	NAD
MDOT-MWC-037	Joint Compound	Ladies Room 101	NAD
MDOT-MWC-038	Ceramic Tile	Men’s Room 122	NAD

Sample #	Material	Location (Sample Point)	Asbestos Present
MDOT-MWC-038A	Grout	Men's Room 122	NAD
MDOT-MWC-039	Joint Compound	Men's Room 122	NAD
MDOT-MWC-040	Drywall (Joint Compound Layer)	Men's Room 122	NAD
MDOT-MWC-040A	Drywall	Men's Room 122	NAD
MDOT-MWC-041	Joint Compound	Lounge 118	NAD
MDOT-MWC-042	Drywall (Joint Compound Layer)	Lounge 118	NAD
MDOT-MWC-042A	Drywall	Lounge 118	NAD
MDOT-MWC-043	Wall Brick Mortar	Display 115	NAD

Sample #	Material	Location (Sample Point)	Asbestos Present
MDOT-MWC-044	Wall Brick Mortar	Reception 111	NAD

NAD = No Asbestos Detected
<1% is defined as non-asbestos-containing material

All analytical reports are presented in the Appendices. All materials were analyzed by PLM. According to the Environmental Protection Agency (EPA) and Occupational Safety and Health Administration (OSHA) regulations, any material containing greater than one percent (>1%) asbestos is considered ACM.

4.0 SUMMARY OF RECOMMENDATIONS

The following recommendations are made concerning the building materials for the I-10 Jackson County Welcome Center, Moss Point, Mississippi.

1. A ten (10) day "Demolition/Renovation Notification Form" as referenced in 40 CFR Part 61, Subpart M, is required to be submitted to Mississippi Department of Environmental Quality (MDEQ) due to a scheduled demolition or the removal of load-bearing walls regardless of no detection of asbestos in the samples that were collected. This report should be kept on file and a copy at the site during demolition activities in the event inquiries are made concerning ACM in building materials that are being disturbed due to demolition performed on site.

2. **SEMS** makes no further recommendations at this time regarding the study site; however, **SEMS** reserves the right to modify our opinion should additional information, not available during the time of this investigation, be presented to **SEMS.**

5.0 QUALIFYING STATEMENT

SEMS has prepared this report for the exclusive use of the client. The report and its analytical results, findings, conclusions, and recommendations either in part or in its entirety are not to be used or relied on by any other party without prior consent by **SEMS, the Client or assigns**. The report format is proprietary to **SEMS**, having been designed, developed, and prepared by **SEMS** at great expense and the information is secret, confidential, unique, and constitutes the exclusive property of **SEMS** and shall not be used by any third party without the prior written consent of **SEMS.** Any use thereof, other than the sole benefit of **SEMS** or the client, shall be deemed wrongful and will cause irreparable injury to **SEMS**.

SEMS presents the findings, conclusions and recommendations, therein, which are based solely on the conditions observed during the inspection and analytical results. The client should be aware that methodologies, results, conclusions, recommendations, and any remediation protocol to be written are based partially upon decisions made by the client concerning the extent of project work to be conducted, and are the results of a limited sampling program conducted on a specific date(s). A different sampling program or samples taken at another time may have resulted in different conclusions, recommendations, and protocols. Additionally, **SEMS** does not make any representation

or projection as to past conditions or future exposures and does not extend its findings to areas outside of the statistical representation of the completed investigation.

APPENDIX A

PROFESSIONAL CREDENTIALS

PROFESSIONAL RESUME

NAME: **Joseph M. Drapala, CIH, CHMM, CIEC**

TITLE: **Industrial Hygiene Manager**

EDUCATION:
B.S. – Mechanical Engineering
Mississippi State University

SPECIALIZED TRAINING:
OSHA 40-Hour Health and Safety
OSHA 40-Hour Hazardous Waste Operations and Emergency Response
EPA/AHERA Asbestos Inspector (Mississippi)
EPA/AHERA Asbestos Management Planning (Mississippi)
EPA/AHERA Asbestos Project Design (Mississippi)
Fundamentals of Dispersion Modeling
Indoor Air Quality / Bio-Aerosols
OSHA 10 and 30-Hour General Industry Outreach Program
Radiation Safety
Comprehensive Industrial Hygiene Review
Quantitative Industrial Hygiene
Basic Hazardous Material Transportation Training
AHIA Management Certification Program
Infectious Diseases and the Role of the Industrial Hygienist in Preventing and Managing the Coming Epidemic
Roles of OEHS Professionals in Pandemic and Avian Influenza
AIHce 2009 Media Training Workshop

CERTIFICATIONS:
American Board of Industrial Hygiene, Certified Industrial Hygienist (No. 9068CP)
Certified Hazardous Material Manager (No. 5181)
Council-Certified Indoor Environmental Consultant (No. 0512009)
Council-Certified Microbial Consultant (No. 0708038)
Mississippi Certified Asbestos Inspector
Mississippi Certified Project Designer
Mississippi Certified Management Planner
Mississippi Certified Lead Inspector

AFFILIATIONS:
American Industrial Hygiene Association (Full Member)
Academy of Industrial Hygiene (Diplomat)
American Council for Accreditation Certification (Certification Board)
Institute of Certified Hazardous Materials Managers

PROFESSIONAL RESUME (Continued)

Joseph M. Drapala, CIH, CHMM, CIEC, CMC, is a Certified Industrial Hygienist (CIH), Certified Hazardous Materials Manager (CHMM), Certified Indoor Environmental Consultant (CIEC) and a Certified Microbial Consultant (CMC). Mr. Drapala has over 26 years of experience in environmental health and safety consulting. This includes compliance and permitting for federal and state environmental regulations, conducting employee exposure assessments regarding OSHA employee safety regulations, emergency response and indoor air quality investigations, remediation and renovation designs concerning asbestos, lead paint, hazardous materials and biological contamination. He has conducted investigations for federal, state, and local governmental agencies, institutions of higher learning, and private concerns, as well as AHERA Inspections and planning management for various school districts throughout the Southeast. Mr. Drapala has developed training materials and presented Industrial Hygiene and Indoor Air Quality seminars for various professional industries, such as insurance adjusters, real estate brokers and appraisers, and professional engineers. Additionally, Mr. Drapala provides expert witness and assistance for trial preparation to attorneys involving indoor air quality (IAQ) and industrial hygiene (IH) litigation. He has written articles and materials for IAQ education seminars with emphasis on molds and bioaerosol exposures.

Mr. Drapala currently serves as a Certification Board Member for the American Council for Accreditation Certification (formerly the American Indoor Air Quality Council).

SELECTED PROJECT EXPERIENCE:

PROJECT MANAGER: Development and Implementation of an Asbestos Abatement of Residential Quarters, Veterans Administration Medical Center, Mississippi. Designed specifications and provided project management to abate asbestos materials for the interior and exterior of seven (7) residential quarters. Abatement included contaminated soil, thermal system insulation, and surfacing materials.

PROJECT DESIGNER: Asbestos Abatement Specifications for Asbestos-Containing Materials, Various Federal, State, and Local Clients, Mississippi. Responsibilities involved developing project specifications and drawings for the abatement of asbestos-containing materials (ACM) from each site. Duties also included pre-qualifications review of contractors, supervision of abatement projects, industrial hygiene monitoring of air quality before, during, and after abatement work.

PROJECT MANAGER: Asbestos Surveys, Abatement Design and Construction Supervision, United States Postal Service, Mississippi, Louisiana, Arkansas, and Texas. Abatement design included specifications of replacement material in abatement area. Conducted quality control air monitoring. Work was conducted in occupied facilities while maintaining full Postal Service operations.

State of Mississippi

Department of Environmental Quality
Office of Pollution Control

Certificate of Licensure

In accordance with the Asbestos Abatement Accreditation and Certification Act,
Enacted as 1989 Mississippi Law, Chapter 505

Be it known that

Joseph Drapala

Having submitted acceptable evidence of qualifications and
training and other appropriate information, is hereby granted this

Asbestos Inspector
Certification

Chief, Asbestos & Lead Branch

Certificate No.: ABI-00003042
Expiration Date: Aug 13th, 2025
Training Expires on Aug 13th, 2025

40701 LIC20240001

PROFESSIONAL RESUME

NAME: **Jonathan R. Muirhead**

TITLE: **Environmental Technician**

EDUCATION: Hinds Community College
Holmes Community College

SPECIALIZED TRAINING:
EPA/AHERA Asbestos Inspector (Mississippi)
EPA/AHERA Asbestos Inspector (Louisiana)
EPA Certified Lead Inspector (Mississippi)
Basic Safety Training
Site Specific Training
Nuclear Gauge User Training-3400 Series for Troxler

CERTIFICATIONS: Mississippi Certified Asbestos Inspector
Louisiana Certified Asbestos Inspector
Mississippi Certified Lead Inspector

Jonathan R. Muirhead is an environmental technician and is trained and experienced in conducting Environmental Site Assessments in accordance with ASTM E-1527-13 and E-2247-16 requirements throughout the southeast. He has conducted numerous asbestos, lead and hazardous materials surveys for various state and local governmental agencies as well as for commercial and institutional clients in the private sector. In addition, he has conducted asbestos and lead sampling in over 300 HUD residences in Mississippi and Louisiana. Mr. Muirhead is a Certified Asbestos and Lead inspector for Mississippi and a Certified Asbestos Inspector for Louisiana.

Mr. Muirhead is responsible for project management for environmental site assessments; asbestos, lead, and hazardous material surveys; and soil and groundwater sampling and monitoring. He provides communication to the client and coordinates activities required by the project scope of work. Mr. Muirhead is also responsible for performing soil and groundwater sampling and monitoring at multiple Hazardous Waste Sites for various industries.

SELECTED PROJECT EXPERIENCE:

ENVIRONMENTAL TECHNICIAN: Phase I Environmental Site Assessments (ESAs), Various Locations, United States. Performed Phase I ESAs of commercial, industrial, agricultural, retail, and governmental properties for "Innocent Landowner Defense."

ENVIRONMENTAL TECHNICIAN: Conducted Asbestos, Lead-Based Paint and Lead-Containing Material Surveys at Various Government HUD housing subdivisions in Mississippi and Louisiana. Contracted to sample and identify for the presence of asbestos-containing and lead-containing materials for HUD and maintain compliance with federal and state regulations.

PHASE I AND II ENVIRONMENTAL SITE ASSESSMENTS

ENVIRONMENTAL TECHNICIAN: Phase I Environmental Site Assessment (ESA), Various Locations, United States. Performed Phase I ESAs of commercial, industrial, agricultural, retail, and governmental properties for "Innocent Landowner Defense."

ENVIRONMENTAL TECHNICIAN: Phase II Environmental Site Assessment (ESA), Various Locations, United States. Assisted Project Manager in performing Phase II ESAs of commercial, industrial, agricultural, retail, and governmental properties for "Innocent Landowner Defense."

ASBESTOS, LEAD AND HAZARDOUS WASTE SURVEYS

ENVIRONMENTAL TECHNICIAN: Conducted Asbestos, Lead-Based Paint and Hazardous Materials Assessment at the University of Mississippi Medical Center, Jackson Mississippi. Worked with various Architects and Medical Center Planning Department to assess areas throughout the facility to sample and identify for the presence of asbestos-containing material, lead-containing materials and identify other potential materials hazards that impact planned renovation activities and maintain compliance with federal and state regulations.

ENVIRONMENTAL TECHNICIAN: Conducted Asbestos, Lead-Based Paint and Hazardous Materials Assessment for the Anti-Ligature Compliance, Mississippi State Hospital, Whitfield, Mississippi. Worked with Architect and Mississippi State Hospital to assess areas throughout the facility to sample and identify for the presence of asbestos- containing material, lead-containing materials and identify other potential materials hazards that impact planned renovation activities and maintain compliance with federal and state regulations.

ENVIRONMENTAL TECHNICIAN: Conducted Asbestos, Lead-Based Paint and Hazardous Materials Assessment at the University of Southern Mississippi, Building #512, Kinesiology, 101 College Drive, Hattiesburg, Mississippi. Worked with Architect and University of Southern Mississippi to assess areas throughout the building to sample and identify for the presence of asbestos-containing material, lead-containing materials and identify other potential materials hazards that impact planned renovation activities and maintain compliance with federal and state regulations.

ENVIRONMENTAL TECHNICIAN: Conducted Asbestos, Lead-Based Paint and Lead-Containing Material Surveys at Southgate Subdivision, Indianola, Mississippi. Worked with Chis Collins of Southgate Development Corporation, Cleveland, Mississippi to sample and identify for the presence of asbestos-containing and lead-containing materials for HUD and maintain compliance with federal and state regulations.

ENVIRONMENTAL TECHNICIAN: Conducted Asbestos, Lead-Based Paint and Lead-Containing Material Surveys at HUD Housing Developments in Shreveport and Bossier City, Louisiana. Worked with SEMS' Shreveport, Louisiana office to sample and identify the presence of asbestos-containing and lead-containing materials for HUD Housing Developments in Shreveport and Bossier City, Louisiana and maintain compliance with federal and state regulations.

SELECTED PROJECT EXPERIENCE (Continued):

SOIL AND GROUNDWATER INVESTIGATIONS

ENVIRONMENTAL TECHNICIAN: Site Contamination Assessment. Assisted Project Manager in sampling - Emergency Response, Site Investigation, Remediation-Restoration and Environmental and Economic Impact on Farm Land Property as a result of an Illinois Central Railroad Train Derailment, Minter City Mississippi. Performed Soil, Groundwater and Air Quality Investigation for Train Derailment Release of Dicylopentadiene (DCPD) on farmland.

ENVIRONMENTAL TECHNICIAN: Environmental Response Action Contractor (ERAC) Services. Conducted Free-Product Recovery services for groundwater vacuum events and groundwater sampling for wells located at sites in Meridian and Bolton, Mississippi.

State of Mississippi

Department of Environmental Quality
Office of Pollution Control

Certificate of Licensure

In accordance with the Asbestos Abatement Accreditation and Certification Act,
Enacted as 1989 Mississippi Law, Chapter 505

Be it known that

Jonathan R. Muirhead

Having submitted acceptable evidence of qualifications and
training and other appropriate information, is hereby granted this

Asbestos Inspector
Certification

Chief, Asbestos & Lead Branch

Certificate No.: ABI-00010589
Expiration Date: October 9th, 2025
Training Expires on October 9th, 2025

78560 LIC20240001

APPENDIX B

LABORATORY ANALYTICAL RESULTS, BULK ASBESTOS REPORTS

EMSL Analytical, Inc.

18369 Petroleum Drive Baton Rouge, LA 70809

Tel/Fax: (225) 755-1920 / (225) 755-1989

http://www.EMSL.com / batonrougelab@emsl.com

EMSL Order: 252501210
Customer ID: SEMS50
Customer PO: 1926-0002
Project ID:

Attention: Jonathan Muirhead
SEMS, Inc.
11628 S. Choctaw Drive
Baton Rouge, LA 70815

Project: 1926-0002

Phone: (225) 337-0402
Fax:
Received Date: 04/11/2025 8:55 AM
Analysis Date: 04/17/2025
Collected Date:

Test Report: Asbestos Analysis of Bulk Materials via AHERA Method 40CFR 763 Subpart E Appendix E supplemented with EPA 600/R-93/116 using Polarized Light Microscopy

			Non-Asbestos		Asbestos
Sample	**Description**	**Appearance**	**% Fibrous**	**% Non-Fibrous**	**% Type**
MDOT-MWC-001 *252501210-0001*	Porch 123 - Column Coating	White Non-Fibrous Homogeneous		100% Non-fibrous (Other)	None Detected
MDOT-MWC-002 *252501210-0002*	Porch 123 - Wall Brick Mortar	Tan Non-Fibrous Homogeneous		100% Non-fibrous (Other)	None Detected
MDOT-MWC-003 *252501210-0003*	Porch 123 - Upper Window Sealant	Tan/White Non-Fibrous Homogeneous		100% Non-fibrous (Other)	None Detected
MDOT-MWC-004 *252501210-0004*	Porch 126 - Column Coating	White Non-Fibrous Homogeneous		100% Non-fibrous (Other)	None Detected
MDOT-MWC-005 *252501210-0005*	Porch 126 - Wall Brick Mortar	Tan Non-Fibrous Homogeneous		100% Non-fibrous (Other)	None Detected
MDOT-MWC-006 *252501210-0006*	Porch 126 - Upper Window Sealant	Tan/White Non-Fibrous Homogeneous		100% Non-fibrous (Other)	None Detected
MDOT-MWC-007 *252501210-0007*	Porch 125 - Column Coating	White Non-Fibrous Homogeneous		100% Non-fibrous (Other)	None Detected
MDOT-MWC-008 *252501210-0008*	Porch 125 - Wall Brick Mortar	Tan Non-Fibrous Homogeneous		100% Non-fibrous (Other)	None Detected
MDOT-MWC-009 *252501210-0009*	Porch 125 - Upper Window Sealant	Tan/White Non-Fibrous Homogeneous		100% Non-fibrous (Other)	None Detected
MDOT-MWC-010 *252501210-0010*	Porch 124 - Column Coating	White Non-Fibrous Homogeneous		100% Non-fibrous (Other)	None Detected
MDOT-MWC-011 *252501210-0011*	Porch 124 - Wall Brick Mortar	Tan Non-Fibrous Homogeneous		100% Non-fibrous (Other)	None Detected
MDOT-MWC-012 *252501210-0012*	Porch 124 - Upper Window Sealant	Tan/White Non-Fibrous Homogeneous		100% Non-fibrous (Other)	None Detected
MDOT-MWC-013 *252501210-0013*	East HVAC & Plumbing Closet - Gray Putty on HVAC Duct	White/Silver/Yellow Fibrous Heterogeneous	20% Cellulose 60% Glass	20% Non-fibrous (Other)	None Detected
MDOT-MWC-014 *252501210-0014*	West HVAC & Plumbing Closet - Gray Putty on HVAC Duct	White/Silver/Yellow Fibrous Heterogeneous	20% Cellulose 60% Glass	20% Non-fibrous (Other)	None Detected
MDOT-MWC-015 *252501210-0015*	West HVAC & Plumbing Closet - HVAC Bellows	Tan/Black Fibrous Heterogeneous	20% Glass	80% Non-fibrous (Other)	None Detected

Initial report from: 04/18/2025 16:33:30

EMSL Analytical, Inc.
18369 Petroleum Drive Baton Rouge, LA 70809
Tel/Fax: (225) 755-1920 / (225) 755-1989
http://www.EMSL.com / batonrougelab@emsl.com

EMSL Order:	252501210
Customer ID:	SEMS50
Customer PO:	1926-0002
Project ID:	

Test Report: Asbestos Analysis of Bulk Materials via AHERA Method 40CFR 763 Subpart E Appendix E supplemented with EPA 600/R-93/116 using Polarized Light Microscopy

			Non-Asbestos		Asbestos
Sample	**Description**	**Appearance**	**% Fibrous**	**% Non-Fibrous**	**% Type**
MDOT-MWC-016 *252501210-0016*	West HVAC & Plumbing Closet - 4" Pipe Insulation, Wrap, Brushed on Coating	White/Silver/Yellow Fibrous Heterogeneous	20% Cellulose 60% Glass	20% Non-fibrous (Other)	None Detected
MDOT-MWC-017 *252501210-0017*	West HVAC & Plumbing Closet - 3" Pipe Insulation & Wrap	White/Silver/Yellow Fibrous Heterogeneous	20% Cellulose 60% Glass	20% Non-fibrous (Other)	None Detected
MDOT-MWC-018 *252501210-0018*	West HVAC & Plumbing Closet - 2" Pipe Insulation & Wrap	White/Silver/Yellow Fibrous Heterogeneous	20% Cellulose 60% Glass	20% Non-fibrous (Other)	None Detected
MDOT-MWC-019 *252501210-0019*	Porch 124 - Sealant around Column Base	Red Non-Fibrous Homogeneous		100% Non-fibrous (Other)	None Detected
MDOT-MWC-020 *252501210-0020*	Porch 126 - Sealant around Column Base	Red Non-Fibrous Homogeneous		100% Non-fibrous (Other)	None Detected
MDOT-MWC-021-Flooring *252501210-0021*	Reception Area - Flooring Tile	Brown Non-Fibrous Homogeneous		100% Non-fibrous (Other)	None Detected
MDOT-MWC-021-Adhesive *252501210-0021A*	Reception Area - Flooring Tile	Brown Non-Fibrous Homogeneous		100% Non-fibrous (Other)	None Detected
MDOT-MWC-022 *252501210-0022*	Stairs 113 - Joint Compound	White Non-Fibrous Homogeneous		100% Non-fibrous (Other)	None Detected
MDOT-MWC-023-Joint Compound *252501210-0023*	Stairs 113 - Drywall	White Non-Fibrous Homogeneous		100% Non-fibrous (Other)	None Detected
MDOT-MWC-023-Drywall *252501210-0023A*	Stairs 113 - Drywall	Gray Non-Fibrous Homogeneous		100% Non-fibrous (Other)	None Detected
MDOT-MWC-024-Flooring *252501210-0024*	Lounge 118 - Floor Tile	Brown Non-Fibrous Homogeneous		100% Non-fibrous (Other)	None Detected
MDOT-MWC-024-Adhesive *252501210-0024A*	Lounge 118 - Floor Tile	Brown Non-Fibrous Homogeneous		100% Non-fibrous (Other)	None Detected
MDOT-MWC-025 *252501210-0025*	West Attic - Insulation	Yellow Fibrous Homogeneous	98% Glass	2% Non-fibrous (Other)	None Detected
MDOT-MWC-026 *252501210-0026*	East Attic - Insulation	Pink Fibrous Homogeneous	98% Glass	2% Non-fibrous (Other)	None Detected
MDOT-MWC-027-Joint Compound *252501210-0027*	Storage 201 - Drywall	White Non-Fibrous Homogeneous		100% Non-fibrous (Other)	None Detected
MDOT-MWC-027-Drywall *252501210-0027A*	Storage 201 - Drywall	Gray Non-Fibrous Homogeneous		100% Non-fibrous (Other)	None Detected

Initial report from: 04/18/2025 16:33:30

EMSL Analytical, Inc.
18369 Petroleum Drive Baton Rouge, LA 70809
Tel/Fax: (225) 755-1920 / (225) 755-1989
http://www.EMSL.com / batonrougelab@emsl.com

EMSL Order: 252501210
Customer ID: SEMS50
Customer PO: 1926-0002
Project ID:

Test Report: Asbestos Analysis of Bulk Materials via AHERA Method 40CFR 763 Subpart E Appendix E supplemented with EPA 600/R-93/116 using Polarized Light Microscopy

			Non-Asbestos		Asbestos
Sample	**Description**	**Appearance**	**% Fibrous**	**% Non-Fibrous**	**% Type**
MDOT-MWC-028 *252501210-0028*	Storage 201 - Joint Compound	White Non-Fibrous Homogeneous		100% Non-fibrous (Other)	None Detected
MDOT-MWC-029 *252501210-0029*	Mechanical 202 - Sheet Flooring	Tan/White/Yellow Fibrous Heterogeneous	20% Cellulose	80% Non-fibrous (Other)	None Detected
MDOT-MWC-030 *252501210-0030*	Janitor Closet 204 - Sheet Flooring	Tan/White/Yellow Fibrous Heterogeneous	20% Cellulose	80% Non-fibrous (Other)	None Detected
MDOT-MWC-031 *252501210-0031*	Attic North - Insulation	Pink Fibrous Homogeneous	98% Glass	2% Non-fibrous (Other)	None Detected
MDOT-MWC-032 *252501210-0032*	Attic East - 4" Pipe Insulation	White/Silver/Yellow Fibrous Heterogeneous	20% Cellulose 60% Glass	20% Non-fibrous (Other)	None Detected
MDOT-MWC-033 *252501210-0033*	Attic East - 2" Pipe Insulation	White/Silver/Yellow Fibrous Heterogeneous	20% Cellulose 60% Glass	20% Non-fibrous (Other)	None Detected
MDOT-MWC-034 *252501210-0034*	Mechanical 202 - Grey Putty on HVAC Duct	White/Silver/Yellow Fibrous Heterogeneous	20% Cellulose 60% Glass	20% Non-fibrous (Other)	None Detected
MDOT-MWC-035-Joint Compound *252501210-0035*	Ladies Room 101 - Drywall	White Non-Fibrous Homogeneous		100% Non-fibrous (Other)	None Detected
MDOT-MWC-035-Drywall *252501210-0035A*	Ladies Room 101 - Drywall	Gray Non-Fibrous Homogeneous		100% Non-fibrous (Other)	None Detected
MDOT-MWC-036-Ceramic Tile *252501210-0036*	Ladies Room 101 - Tile Grout	Red Non-Fibrous Homogeneous		100% Non-fibrous (Other)	None Detected
MDOT-MWC-036-Grout *252501210-0036A*	Ladies Room 101 - Tile Grout	Gray Non-Fibrous Homogeneous		100% Non-fibrous (Other)	None Detected
MDOT-MWC-037 *252501210-0037*	Ladies Room 101 - Joint Compound	White Non-Fibrous Homogeneous		100% Non-fibrous (Other)	None Detected
MDOT-MWC-038-Ceramic Tile *252501210-0038*	Men's Room 122 - Tile Grout	Red Non-Fibrous Homogeneous		100% Non-fibrous (Other)	None Detected
MDOT-MWC-038-Grout *252501210-0038A*	Men's Room 122 - Tile Grout	Gray Non-Fibrous Homogeneous		100% Non-fibrous (Other)	None Detected
MDOT-MWC-039 *252501210-0039*	Men's Room 122 - Joint Compound	White Non-Fibrous Homogeneous		100% Non-fibrous (Other)	None Detected
MDOT-MWC-040-Joint Compound *252501210-0040*	Men's Room 122 - Drywall	White Non-Fibrous Homogeneous		100% Non-fibrous (Other)	None Detected
MDOT-MWC-040-Drywall *252501210-0040A*	Men's Room 122 - Drywall	Gray Non-Fibrous Homogeneous		100% Non-fibrous (Other)	None Detected

Initial report from: 04/18/2025 16:33:30

EMSL Analytical, Inc.
18369 Petroleum Drive Baton Rouge, LA 70809
Tel/Fax: (225) 755-1920 / (225) 755-1989
http://www.EMSL.com / batonrougelab@emsl.com

EMSL Order:	252501210
Customer ID:	SEMS50
Customer PO:	1926-0002
Project ID:	

Test Report: Asbestos Analysis of Bulk Materials via AHERA Method 40CFR 763 Subpart E Appendix E supplemented with EPA 600/R-93/116 using Polarized Light Microscopy

			Non-Asbestos		Asbestos
Sample	**Description**	**Appearance**	**% Fibrous**	**% Non-Fibrous**	**% Type**
MDOT-MWC-041 *252501210-0041*	Lounge 118 - Joint Compound	White Non-Fibrous Homogeneous		100% Non-fibrous (Other)	None Detected
MDOT-MWC-042-Joint Compound *252501210-0042*	Lounge 118 - Drywall	White Non-Fibrous Homogeneous		100% Non-fibrous (Other)	None Detected
MDOT-MWC-042-Drywall *252501210-0042A*	Lounge 118 - Drywall	Gray Non-Fibrous Homogeneous		100% Non-fibrous (Other)	None Detected
MDOT-MWC-043 *252501210-0043*	Display 115 - Wall Brick Mortar	Tan Non-Fibrous Homogeneous		100% Non-fibrous (Other)	None Detected
MDOT-MWC-044 *252501210-0044*	Reception 111 - Wall Brick Mortar	Tan Non-Fibrous Homogeneous		100% Non-fibrous (Other)	None Detected

Analyst(s)
Bailey Gunter (53)

Martiana Beach, Laboratory Manager
or Other Approved Signatory

EMSL maintains liability limited to cost of analysis. Interpretation and use of test results are the responsibility of the client. This report relates only to the samples reported above, and may not be reproduced, except in full, without written approval by EMSL. EMSL bears no responsibility for sample collection activities or analytical method limitations. The report reflects the samples as received. Results are generated from the field sampling data (sampling volumes and areas, locations, etc.) provided by the client on the Chain of Custody. Samples are within quality control criteria and met method specifications unless otherwise noted. The above analyses were performed in general compliance with Appendix E to Subpart E of 40 CFR (previously EPA 600/M4-82-020 "Interim Method") but augmented with procedures outlined in the 1993 ("final") version of the method. This report must not be used by the client to claim product certification, approval, or endorsement by NVLAP, NIST or any agency of the federal government. Non-friable organically bound materials present a problem matrix and therefore EMSL recommends gravimetric reduction prior to analysis. Unless requested by the client, building materials manufactured with multiple layers (i.e. linoleum, wallboard, etc.) are reported as a single sample. Estimation of uncertainty is available on request.

Samples analyzed by EMSL Analytical, Inc. Baton Rouge, LA NVLAP Lab Code 200375-0, LELAP 01950, TX 300238

Initial report from: 04/18/2025 16:33:30

OrderID: 252501210

EMSL Analytical, Inc.

Asbestos Bulk Building Materials - Chain of Custody

EMSL ANALYTICAL, INC.
LABORATORY • PRODUCTS • TRAINING

EMSL Order Number / Lab Use Only: 25250 1210

Baton Rouge, LA 70809
PHONE: (225) 755-1920
EMAIL: batonrougelab@emsl.com

Customer Information		Billing Information	
Customer ID:	SEMS50	Billing ID:	SEMS50
Company Name:	SEMS Inc.	Company Name:	SEMS Inc.
Contact Name:	Jonathan Muirhead	Billing Contact:	Kari Guitreau
Street Address:	160 Upton Drive	Street Address:	11628 South Choctaw Drive
City, State, Zip:	Jackson MS 39206 Country: US	City, State, Zip:	Baton Rouge LA 70815 Country: US
Phone:	6015219056	Phone:	2259242002
Email(s) for Report:	jmuirhead@semsinc.net	Email(s) for Invoice:	kguitreau@semsinc.net

Project Information

Project Name/No:	1926-0002	Purchase Order:	1926-0002
EMSL LIMS Project ID: (If applicable, EMSL will provide)		US State where samples collected:	MS
State of Connecticut (CT) must select project location:	☐ Commercial (Taxable) ☐ Residential (Non-Taxable)		
Sampled By Name:	Jonathan Muirhead	Sampled By Signature:	
Date Sampled:	4-8&9-2025	No. of Samples in Shipment	44

Turn-Around-Time (TAT)

☐ 3 Hour ☐ 6 Hour ☐ 24 Hour ☐ 32 Hour ☐ 48 Hour ☐ 72 Hour ☐ 96 Hour ☑ 1 Week ☐ 2 Week

Please call ahead for large projects and/or turnaround times 6 Hours or Less *32 Hour TAT available for select tests only; samples must be submitted by 11:30am

Test Selection

PLM - Bulk (reporting limit)

- ☑ PLM EPA 600/R-93/116 (<1%)
- ☐ PLM EPA NOB (<1%)
- ☐ POINT COUNT
  - ☐ 400 (<0.25%) ☐ 1,000 (<0.1%)
- ☐ POINT COUNT w/ GRAVIMETRIC
  - ☐ 400 (<0.25%) ☐ 1,000 (<0.1%)
- ☐ NIOSH 9002 (<1%)
- ☐ NYS 198.1 (Friable - NY)
- ☐ NYS 198.6 NOB (Non-Friable - NY)
- ☐ NYS 198.8 (Vermiculite SM-V)

TEM - Bulk

- ☐ TEM EPA NOB
- ☐ NYS NOB 198.4 (Non-Friable - NY)
- ☐ TEM EPA 600/R-93/116 w Milling Prep (0.1%)

Other Tests (please specify)

- ☐ Positive Stop - Clearly Identified Homogeneous Areas (HA)

Sample Number	HA Number	Sample Location	Material Description
		Please See Pages Attached	

Special Instructions and/or Regulatory Requirements (Sample Specifications, Processing Methods, Limits of Detection, etc.)

Please send results to the following - jmuirhead@semsinc.net , mwalters@semsinc.net , jdrapala@semsinc.net , lmuirhead@semsinc.net

Method of Shipment:	FedEx	Sample Condition Upon Receipt:	
Relinquished by:	Jonathan Muirhead	Date/Time: 4-10-25/17:00	Received by:	Date/Time: 4/11/25 8:25AM
Relinquished by:		Date/Time:	Received by:	Date/Time

Controlled Document - Asbestos Bulk R7 9/14/2021

☑ AGREE TO ELECTRONIC SIGNATURE (By checking, I consent to signing this Chain of Custody document by electronic signature.)

EMSL Analytical, Inc.'s Laboratory Terms and Conditions are incorporated into this Chain of Custody by reference in their entirety. Submission of samples to EMSL Analytical, Inc. constitutes acceptance and acknowledgment of all terms and conditions by Customer.

8804 6783 5670

252501210

Chain of Custody

Asbestos Lab Services

EMSL Analytical Inc.

18369 Petroleum Drive
Baton Rouge, LA
70809
Phone (225) 755-1920
Fax (225) 755-1989
http:// www.emsl.com

Client sample # (s): MDOT-MWC-001 through 044 **Total samples #:** 44

Relinquished: Jonathan Muirhead **Date:** 4/8&9/2025 **Time:** 17:00

Received: [illegible] **Date:** 4/11/25 **Time:** 8:55 AM

Relinquished: **Date:** **Time:**

Received: **Date:** **Time:**

Sample Number	Sample Description/Location	Volume (if applicable)
MDOT-MWC-001	Column Coating / Porch 123	
MDOT-MWC-002	Wall Brick Mortar / Porch 123	
MDOT-MWC-003	Upper Window Sealant / Porch 123	
MDOT-MWC-004	Column Coating / Porch 126	
MDOT-MWC-005	Wall Brick Mortar / Porch 126	
MDOT-MWC-006	Upper Window Sealant / Porch 126	
MDOT-MWC-007	Column Coating / Porch 125	
MDOT-MWC-008	Wall Brick Mortar / Porch 125	
MDOT-MWC-009	Upper Window Sealant / Porch 125	
MDOT-MWC-010	Column Coating / Porch 124	
MDOT-MWC-011	Wall Brick Mortar / Porch 124	
MDOT-MWC-012	Upper Window Sealant / Porch 124	
MDOT-MWC-013	Gray Putty on HVAC Duct / East HVAC & Plumbing Closet	
MDOT-MWC-014	Gray Putty on HVAC Duct / West HVAC & Plumbing Closet	
MDOT-MWC-015	HVAC Bellows / West HVAC & Plumbing Closet	
MDOT-MWC-016	4" Pipe Insulation, Wrap, Brushed on Coating / West HVAC & Plumbing Closet	
MDOT-MWC-017	3" Pipe Insulation & Wrap / West HVAC & Plumbing Closet	
MDOT-MWC-018	2" Pipe Insulation & Wrap / West HVAC & Plumbing Closet	
MDOT-MWC-019	Sealant around Column Base / Porch 124	
MDOT-MWC-020	Sealant around Column Base / Porch 126	
MDOT-MWC-021	Flooring Tile / Reception Area	
MDOT-MWC-022	Joint Compound / Stairs 113	
MDOT-MWC-023	Drywall / Stairs 113	
MDOT-MWC-024	Floor Tile / Lounge 118	
MDOT-MWC-025	Insulation / West Attic	
MDOT-MWC-026	Insulation / East Attic	
MDOT-MWC-027	Drywall / Storage 201	
MDOT-MWC-028	Joint Compound / Storage 201	
MDOT-MWC-029	Sheet Flooring / Mechanical 202	
MDOT-MWC-030	Sheet Flooring / Janitor Closet 204	
	Page 2	

252501210

Chain of Custody

Asbestos Lab Services

EMSL Analytical Inc.

18369 Petroleum Drive
Baton Rouge , LA
70809
Phone (225) 755-1920
Fax (225) 755-1989
http:// www.emsl.com

Client sample # (s): MDOT-MWC-001 through 044 **Total samples #:** 44

Relinquished:	Jonathan Muirhead	**Date:**	4/8&9/2025	**Time:**	17:00
Received:		**Date:**		**Time:**	
Relinquished:		**Date:**	4/11/25	**Time:**	
Received:		**Date:**	4/11/25	**Time:**	8:55AM

Sample Number	Sample Description/Location	Volume (if applicable)
MDOT-MWC-031	Insulation / Attic North	
MDOT-MWC-032	4" Pipe Insulation / Attic East	
MDOT-MWC-033	2" Pipe Insulation / Attic East	
MDOT-MWC-034	Grey Putty on HVAC Duct / Mechanical 202	
MDOT-MWC-035	Drywall / Ladies Room 101	
MDOT-MWC-036	Tile Grout / Ladies Room 101	
MDOT-MWC-037	Joint Compound / Ladies Room 101	
MDOT-MWC-038	Tile Grout / Men's Room 122	
MDOT-MWC-039	Joint Compound / Men's Room 122	
MDOT-MWC-040	Drywall / Men's Room 122	
MDOT-MWC-041	Joint Compound / Lounge 118	
MDOT-MWC-042	Drywall / Lounge 118	
MDOT-MWC-043	Wall Brick Mortar / Display 115	
MDOT-MWC-044	Wall Brick Mortar / Reception 111	
	Page 3	

MISSISSIPPI DEPARTMENT OF TRANSPORTATION

ADDENDUM No. 2
DOCUMENT 00 91 13

DATE: **APRIL 17, 2026**

PROJECT: **I-10 JACKSON COUNTY WELCOME CENTER**

PROJECT NUMBER: **STBG-0010-01(180) / 109171-301000**

PART 1 - GENERAL

1.01 DESCRIPTION

This Addendum forms a part of the Contract Documents and modifies the January 30, 2026 Issued for Bid documents with amendments and additions noted below.

Acknowledge receipt of this Addendum in the space provided in the Bid Form. Failure to do so may disqualify the Bidder.

1.02 CHANGES TO SPECIFICATIONS

00 01 10 – Table of Contents

Clarification: Provided updated Table of Contents

Delete Table of Contents Section 00 10 00 in its entirety and replace with the revised Section 00 01 00.

00 31 26 – Existing Hazardous Material Information

Clarification: Inclusion of Asbestos Survey Report.

Specification Section 00 31 26 is incorporated in its entirety.

01 21 00 – Allowances

Clarification: Added Door Hardware as an allowance. Added Food Service Equipment as an allowance.

Delete Specification Section 01 21 00 in its entirety and replace with the revised Section 01 21 00.

01 25 00 – Substitution Procedures

Clarification: Revised BABA language.

Delete Specification Section 01 25 00 in its entirety and replace with the revised Section 01 25 00.

01 29 00 – Payment Procedures

Clarification: Added language regarding Applications for Payment.

Paragraph 1.04.B Applications for Payment: Add the following after subparagraph 6.

7. With each Application for Payment, submit documentation supporting compliance with Build America, Buy America (BABA) requirements for all applicable materials and manufactured products incorporated into the Work during the payment period.

   a. Documentation shall include invoices, purchase orders, and/or other records sufficient to demonstrate material costs and country of manufacture.

   b. Contractor shall maintain a cumulative log of all applicable materials and manufactured products, including associated material costs and country of manufacture, and shall identify any items for which compliance cannot be verified.

   c. Submit the log in a format acceptable to the Owner, separate from the Schedule of Values, and update with each Application for Payment.

   d. Failure to provide required documentation may be grounds for withholding payment.

01 33 00 – Submittal Procedures

Clarification: Revised BABA language.

Delete Specification Section 01 33 00 in its entirety and replace with the revised Section 01 33 00.

01 60 00 – Product Requirements

Clarification: Revised BABA language.

Delete Specification Section 01 60 00 in its entirety and replace with the revised Section 01 60 00.

08 33 00 – Rolling Doors_Service Doors:

Clarification: Provided rolling door specification for the Water Treatment Plant Building.

Specification Section 08 33 00 is incorporated in its entirety.

08 71 00 – Door Hardware:

Clarification: Replaced specification to remove Hardware Sets and to provide an Allowance.

Delete Specification Section 08 71 00 in its entirety and replace with the revised Section 08 71 00.

09 66 23 – Epoxy Terrazzo:

Clarification: Product is revised to remove references to discontinued manufacturers and to clarify acceptable materials and product sourcing requirements for bidding purposes.

Delete Specification Section 09 66 23 in its entirety and replace with the revised Section 09 66 23.

10 21 13 – Phenolic Toilet Compartments

Clarification: The term "phenolic" as used in this Section shall be interpreted to mean solid, self-supporting compact laminate panels (phenolic core) manufactured under high pressure and not less than the thicknesses specified.

Products consisting of **thin decorative laminate (HPL) bonded to a substrate, sandwich panel construction, or non-structural laminate systems are not acceptable.**

Acceptable manufacturers shall provide **true compact laminate (phenolic core) systems** meeting these requirements and complying with BABA provisions.

No substitutions or material deviations from these requirements will be permitted.

10 28 00 – Toilet and Bath Accessories

Clarification: Delete all references to "Fino Collection" and matte black finishes.

Finishes:
Toilet and bath accessories located **within the large restroom toilet compartments (stalls)** and Family Restrooms shall be **Type 304 stainless steel with satin finish.**

This change is not applicable to the black frames on the custom mirrors in the large restrooms.

Refer to Section 2.14 – Adult Changing Station. This item has been removed from the Contract and is designated as "Not in Contract." Provide electrical power and wall blocking to accommodate future installation by the Owner.

11 40 00 – Food Service Equipment:

Clarification: Replaced specification to remove the Food Service Equipment and to provide an Allowance.

Delete Specification Section 11 40 00 in its entirety and replace with the revised Section 11 40 00.

12 93 00 – Site Furnishings:

Clarification: Removed Pet Waste Station from the project.

Refer to Section 1.1.A.4 – Delete this subparagraph in its entirety. Pet Waste Stations are "Not in Contract."

Refer to Section 2.2.D - Delete this subparagraph in its entirety. Pet Waste Stations are "Not in Contract."

22 42 13 – Commercial Plumbing Fixtures:

Clarification: Revised Plumbing Fixture Schedule.

Delete Specification Section 22 42 13 in its entirety and replace with the revised Section 22 41 13.

27 41 00 – Direct View LED Display System

Paragraph 2.2.A.1 Description: Add the following sentence to the end of the paragraph.

Provide attic stock equal to five percent (5%) of LED display components associated with the display panels only, including LED modules, power supplies, and receiving cards integral to the display cabinets. Attic stock shall be new, unused, and identical to installed components, and shall be from the same production run where possible. . Furnish attic stock at time of closeout and include in O&M manuals with a complete inventory list.

28 23 00 – Video Surveillance

Clarification: Provided specification to align with drawings.

Specification Section 28 23 00 is incorporated in its entirety.

33 13 01 – Disinfection Chemical System

Clarification: Disinfection for water and wastewater has been changed from gaseous chlorine to liquid bleach for the water and chlorine tablets for the wastewater.

Specification Section 33 13 01 is incorporated in its entirety.

Plan sheets Util - 6, 8 and 10 have been changed to add the new water line to feed the hydrants on the front of the building and to indicate the change from gaseous chlorine to liquid bleach for the water disinfection.

44 41 13.16 – Packaged Biological Wastewater Treatment Plant

Clarification: Disinfection for water and wastewater has been changed from gaseous chlorine to liquid bleach for the water and chlorine tablets for the wastewater. These changes are incorporated in the specs 33 13 01 and 44 41 13.16.

Delete Specification Section 44 41 13.16 in its entirety and replace with the revised Section 44 41 13.16.

Plan sheets Util - 6, 8 and 10 have been changed to add the new water line to feed the hydrants on the front of the building and to indicate the change from gaseous chlorine to liquid bleach for the water disinfection.

1.03 CHANGES TO DRAWINGS

Refer to the Revision Sheet listed in the plans for revisions. No Architecture Sheets have been issued for this Addendum. Any revisions to Plumbing and Electrical Site Plans included in this Addendum shall take precedence over Architectural Site Plan.

1.04 PRE-BID MEETING

Meeting minutes and sign-in sheet are attached as a part of this addendum.

PART 2 - PRODUCTS (Not Used)

PART 3 - EXECUTION (Not Used)

END OF SECTION

Minutes of Pre-Bid Meeting

Project: I-10 Jackson County Welcome Center

Project No.: STBG-0010-01(180) / 109171-301000

Date and time: April 1, 2026, 10:00 AM

Location: Hattiesburg District 6 Office - Auditorium

Attendees: See attached sign-in sheet

The meeting started at 10:00 AM.

1. Neil Dougherty (MDOT Contract Administration Division) explained how to register for and submit a bid using Bid Express. Bidders were invited to contact the Contract Administration Division with any questions about Bid Express.

2. Mark Turner (MDOT Contract Administration Division) explained the subcontracting process that will occur after award of the contract.
   - The Prime Contractor must perform a minimum of 40% of work with his own organization, after subtracting specialty items.
   - Items must be subcontracted in order to be considered specialty items.
   - Specialty Items are listed in:
     - Notice to Bidders No. 7694, and
     - Section 00 22 13 – Supplementary Instructions to Bidders (S.P. 907-242-14)
   - Attention is drawn to pg. 54 of the proposal, which covers Federal Contract Provisions for Subcontracts.
   - Labor payroll is required to be submitted to the Project Engineer on a weekly basis. CAD-880 and CAD-881
   - No person is to perform work on the project other than the Prime contractor's own organization without an approved subcontract or rental agreement.

3. Seth Winchester (MDOT Architectural Services Unit) highlighted the following areas of Proposal:
   - Deadline to receive bids is 10:00am on April 28, 2026 via Bid Express. SECTION 901 – ADVERTISEMENT
   - The governing specifications are MDOT's Standard Specifications for Road and Bridge Construction (2017 edition). SECTION 904 – NOTICE TO BIDDERS NO. 1
   - Page 9 of the proposal states that "the contractor will not need to remove any buildings". This is incorrect, and will be addressed in upcoming addendum.
   - No more than 19 acres can be disturbed at one time. SECTION 904 – NOTICE TO BIDDERS NO. 757
   - Project is covered by MDEQ Storm Water Large Construction General Permit. SECTION 904 – NOTICE TO BIDDERS NO. 4638
   - Completion date and NTP are noted. SECTION 904 – NOTICE TO BIDDERS NO. 7693
   - Build America, Buy America – David Williams (FHWA) points out that Build America, Buy America requirements will need to be met. See requirements in proposal and addenda.

- Special Provision 907-242-14 contains the architectural specifications.
- There will be no substation requests approved prior to bid. Section 01 25 00 – Substitution Procedures.
- Schedule of Values: AIA G703 format. Separate line items are required for labor and materials. Prepare schedule of values as indicated in Section 01 29 00 – Payment Procedures.
- Special attention is called to Building Construction Manager (BCM) requirements. Section 01 31 00 – Project Management and Coordination.
- All shop drawings and submittals must be transmitted using Submittal Exchange, which will serve as the project website. Section 01 31 23 – Project Web Site
- A copy of the Domestic Materials Self-Certification Form must be attached with each submittal and substitution request. A PDF copy of the form can be provided. Section 01 33 00 – Submittal Procedures
- Special attention is called to Section 01 45 10 – Construction Quality Control

4. The floor was opened for questions and discussion. No questions were asked. The following items were covered in open discussion:

    - Attendees are shown how to access the MDOT's 2017 Standard Specifications for Road and Bridge Construction online: https://mdot.ms.gov/portal/engineering_standards_guides_manuals
    - Attendees are shown how to submit questions through MDOT's Letting website. Mdot.ms.gov → Business Center → Project Letting → April 28, 2026 → Click on project Call # to submit question.
    - Mark Lishen (EGH Architects) explains that MDOT will be performing testing for earthwork and some concrete, EGH special inspector will handle all other special inspections.
    - Mockups: refer to Section 01 43 39 - Mockup Requirements for general mockup requirements. More specific mockup requirements are contained in the various technical specification sections.
    - Progress meetings will be held weekly.
    - The contractor's jobsite trailer will serve as the meeting space for progress meetings. Requirements are listed in Section 01 50 00 – Temporary Facilities and Controls.
    - Gabe Faggard (Neel-Schaffer) makes everyone aware that an addendum is coming that will include some changes to the wastewater treatment plant.
    - Chris Beaugez (IC Thomasson) makes everyone aware that an addendum is coming that will modify some of the site lighting and conduit around truck parking.
    - All addenda will be posted to the letting website by 10:00am on the Friday prior to the bid opening.
    - There is a large ground sign shown on the plans as Not in Contract. There is a chance that this sign will be constructed concurrently with this project.

5. The floor was opened again for contractor questions. No questions were asked.

6. The meeting was adjourned.

JACKSON COUNTY WELCOME CENTER PRE-BID MEETING

Project: 109171-301000

Topic: Pre-Bid Meeting

Meeting Date: April 1, 2026 10:00am

Place/Room: Hattiesburg District Office Auditorium

Name	Division/Company	Phone	E-Mail
Seth Winchester	MDOT - ASU	601-359-7537	swinchester@mdot.ms.gov
PATRICK FURR	NEEL-SCHAFFER	601-297-8725	PATRICK.FURR@neel-schaffer.com
Geoffrey Crosby	Neel-Schaffer	601-408-3354	geoffrey.crosby@neel-schaffer.com
DAVID WILLIAMS	FHWA	601-506-1029	DAVID.E.WILLIAMS@DOT.GOV
Bradley Cieslinski	RNGD Infrastructure LLC	985-778-3484	bcieslinski@rngd.com
Mark Turner	MDOT - CAD	601-359-7729	mturner@mdot.ms.gov
Neal Dougherty	MDOT - CAD	601-359-7730	ndougherty@mdot.ms.gov
Dena Brooks	Orocon Construction	228-432-5922	estimating@orocon LLC.com
Martin Caroline	Precise	901 550 3826	martin@2precise.com
DANNY HRAPMANN	WARREN PAVING	504-432-0889	DANNYHRAPMANN@WARREN PAVING.COM
Adam Wiles	JLB Contractors	228-697-1423	adam@jlb-co.com
Jonathon Turner	Chris Albritton Const.	601 425-9100	Jonathon@chrisalbritton Const.com
Blaise Thomas	Simmons Erosion Control	601-906-4101	blaise.thomas@simmonserosion.com
Daniel Scarborough	Roberson Construction	601-832-3840	Daniel@Roberson Const.Com

JACKSON COUNTY WELCOME CENTER PRE-BID MEETING

Project: 109171-301000

Topic: Pre-Bid Meeting

Meeting Date: April 1, 2026 10:00am

Place/Room: Hattiesburg District Office Auditorium

Name	Division/Company	Phone	E-Mail
Collin Jones	Alliant Construction	601 503 4538	cjones@alliantconstruction.com
Brian Meeks	Alliant Construction	931.625.1515	bmeeks@alliantconstruction.com
MICHAEL VOLK	ALLIANT CONSTRUCTION	601 665 5249	mvolk@alliantconstruction.com
Cape Jones	MDOT 6TH District	601 544 6511	cjones@mdot.ms.gov
SCOTT WHITE	MDOT 6TH DIST.	601-544-6511	SCWHITE@MDOT.MS.GOV
Billy Owen	MDOT D6	601-544-6511	bowen@mdot.ms.gov
Rusty PERKINS	MDOT ASU	601-668-9739	
Chris Beauge	ICT	228-238-7262	christopher.beauge@salasobrien.com
Danielle Thomas	EGH	228.594.2323	dthomas@egh.ms.
Jake Herrick	TL Wallace	662-588-1623	jherrick@tlwallace.com
Derek Carter	TLW	601 270 1893	Dcarter@tlwallace.com
MARK LISTER	EGH	228 594 2323	mlister@egh.ms
Charles Chapman	LOE	228-207-0070	charles@linecookengineering.com
Paul Purvis	D6	601-543-4755	wpurvis@mdot.ms.gov

SECTION 01 21 00 – ALLOWANCES – ADDENDUM NO. 2

PART 1 – GENERAL

1.1 SUMMARY

A. Section includes administrative and procedural requirements governing lump-sum allowances.

1. Movable Furniture and Fixtures as indicated on the Furniture and Fixture Schedule.

    a. Desk chairs
    b. Breakroom table
    c. Breakroom chairs
    d. Rocking chairs
    e. Lounge chairs
    f. Benches (interior)
    g. Desk
    h. Guest chairs
    i. Pouf split seating (large and small)
    j. Waste receptacle (interior)
    k. Custom area rugs (including non-slip pads)
    l. Conference table
    m. Custom vitrines
    n. Side tables

2. Door Hardware – Section 08 71 00

3. Food Service Equipment – Section 11 40 00

B. Conditions:

1. The Contractor shall include in his base bid the cash and/or material allowances as described hereinafter for the purchase of materials as described or as to be determined herein. All costs for overhead, profit, bond, insurance, installation, labor, receiving and handling at the project site, storage off-site if required and equipment rental shall not be included as part of the specified allowances and these overhead amounts shall be carried as an additional cost, where applicable, in a separate line item on the contractor's bid and subsequent schedule of values.

2. All specified allowances shall appear as a line item amount, matching the amount specified herein, on the contractor's AIA Document G703, schedule of values.

3. Selections shall be made by the Architect (and MDOT Architect) or as specified herein and the contract price shall be adjusted as per the final price of the materials used.

1.2 BUILD AMERICA, BUY AMERICA ACT (BABA)

A. This Project is subject to the Build America, Buy America Act (BABA), 41 U.S.C. §§ 8301–8305.

B. Domestic Manufacturing Requirements:

1. Iron and steel: All manufacturing processes, from melting through coating, shall occur in the United States.

2. Manufactured products: All manufactured products permanently incorporated into the project must be manufactured in the United States.

3. Construction materials: All manufacturing processes for construction materials shall occur in the United States.

C. Compliance Documentation:

1. Provide manufacturer's certification of domestic origin for all products.

2. Provide BABA compliance documentation with each product submittal. Refer to Section 01 33 00 Submittals.

3. Failure to provide BABA documentation will be grounds for rejection.

D. Waivers:

1. **Waivers will not be considered.**

1.3 SELECTION AND PURCHASE

A. At the earliest practical date after award of the Contract, advise Architect and MDOT Architect of the date when final selection and purchase of each product or system described by an allowance must be completed to avoid delaying the Work.

B. At Architect's / MDOT Architect's request, obtain proposals for each allowance for use in making final selections. Include recommendations that are relevant to performing the Work.

C. Purchase products and systems selected by Architect from the designated supplier.

1.4 INFORMATIONAL SUBMITTALS

A. Submit invoices or delivery slips to show actual quantities of materials delivered to the site for use in fulfillment of each allowance.

B. Coordinate and process submittals for allowance items in same manner as for other portions of the Work.

1.5 COORDINATION

A. Coordinate allowance items with other portions of the Work. Furnish templates as required to coordinate installation.

1.6 LUMP SUM ALLOWANCES

A. General:

1. Purchase products under allowance as directed by Architect or as specified herein.

2. The amount of all specified allowances shall include:

   a. Net cost of product, including taxes
   b. Freight and delivery to site
   c. Installation labor and related construction costs are excluded from the allowance amount and shall be included in the Contractor's base bid.

3. At close-out of Contract, funds remaining in Allowance will be credited to MDOT by Change Order. In addition to the balance of the allowance all applicable costs for overhead, profit, bond, insurance and taxes will be added to the allowance change order credit. Overhead amounts that can be clearly documented as being expended over the course of the project will be excluded from this added amount to the allowance credit.

1.7 SELECTION OF PRODUCTS

A. Architect's Duties:

1. Consult with Contractor in consideration of products and suppliers.

2. Make selection, designate products to be used.

B. Contractor's Duties:

1. Assist Architect in determining qualified suppliers.

2. Obtain proposals from suppliers when requested by Architect.

3. Make appropriate recommendations for consideration of Architect.

4. Notify Architect of any effect anticipated by selection of product or supplier under consideration on:

   a. Construction schedule.

   b. Contract sum.

1.8 DELIVERY

A. Contractor Responsibility:

1. Arrange for delivery and unloading.
2. Promptly inspect products for damage and defects.

3. Submit claims for transportation damage.

1.9 INSTALLATION

A. Comply with requirements of referenced specification section.

1.10 ADJUSTMENT OF ALLOWANCES

A. Should actual purchase cost be more or less than specified amount of allowance, Contract Sum will be adjusted by Change Order equal to amount of difference.

B. For products specified under unit cost allowance:

1. Should quantity used be more or less than that listed in Schedule of Values, unit cost applies to quantity actually used.

2. Submit invoices or other data to substantiate quantity actually used.

3. Submit request for other costs, claimed for additional work caused by increase over amount of allowance, prior to execution of work.

C. Submit claims for increased costs because of a change in scope or nature of the allowance described in the Contract Documents, whether for the purchase order amount or Contractor's handling, labor, installation, overhead, and profit.

1. Do not include Contractor's or subcontractor's indirect expense in the Change Order cost amount unless it is clearly shown that the nature or extent of work has changed from what could have been foreseen from information in the Contract Documents.

2. No change to Contractor's indirect expense is permitted for selection of higher- or lower-priced materials or systems of the same scope and nature as originally indicated.

PART 2 – PRODUCTS

Not used.

PART 3 – EXECUTION

3.1 EXAMINATION

A. Examine products covered by an allowance promptly on delivery for damage or defects. Return damaged or defective products to manufacturer for replacement.

3.2 PREPARATION

A. Coordinate materials and their installation for each allowance with related materials and installations to ensure that each allowance item is completely integrated and interfaced with related work.

3.3 SCHEDULE OF ALLOWANCES

A. Allowance for Movable Furniture and Fixtures, as indicated on the Furniture and Equipment Schedule labeled as “Allowance” on Sheet I700 in the Drawings and as indicated in Specification 12 50 00 Furniture.

1. One Hundred Seventy-Five Thousand Dollars ($175,000).

B. Door Hardware Allowance: Provide an allowance for door hardware in lieu of specified hardware sets. Door hardware shall be provided in accordance with Section 08 71 00 – Door Hardware, modified to remove specified hardware sets, and coordinated with door and frame requirements indicated in the Drawings.

1. One Hundred Fifty Thousand Dollars ($150,000).

C. Food Service Allowance: Provide an allowance for food service in lieu of specified equipment. Food Service Equipment shall be provided in accordance with Section 11 40 00 – Food Service Equipment, modified to remove specified equipment, and coordinated with clearance requirements indicated in the Drawings.

1. Ten Thousand Dollars ($10,000).

C. In addition to the work shown on the Contract Documents, include in the Base Bid Contract Amount the above lump sum allowances.

D. Contractor shall solicit a minimum of three (3) quotes for additional material or work to be performed under each allowance.

E. Use of allowances shall be specifically authorized in writing by the authorized Owner Representative.

F. A final accounting of all allowance funds used will be made by issuance of a Change Order at the end of the Project. At close-out of the Contract, funds remaining in the allowances will be credited to MDOT by Change Order.

END OF SECTION

SECTION 01 25 00

SUBSTITUTION PROCEDURES – ADDENDUM NO. 2

PART 1 - GENERAL

1.01 SUMMARY

A. Section includes administrative and procedural requirements for substitutions.

B. Related Requirements:

1. Section 01 33 00 “Submittal Procedures” for submittal requirements.

2. Section 01 60 00 "Product Requirements" for requirements for submitting comparable product submittals for products by listed manufacturers.

C. Build America, Buy America (BABA) Compliance:

1. All substitution requests must demonstrate full compliance with the Build America, Buy America Act (Public Law 117-58) and related FHWA Buy America requirements.

2. Submittals shall include certification of U.S. manufacturing origin for all iron, steel, manufactured products, and construction materials proposed as substitutions.

3. Contractor shall not assume the availability of waivers. Where federal waivers are granted by FHWA, such waivers shall govern. If compliance requirements materially change after bid due to such waivers, adjustments to the Contract Time and/or Contract Sum may be considered in accordance with the Contract Documents.

4. Any product found to be non-compliant with BABA requirements shall be removed and replaced with a compliant product at the Contractor’s sole expense. Failure to procure compliant materials shall not justify a substitution request, change order, or adjustment to the Contract Sum or Contract Time, except as may be allowed under BABA and approved by MDOT.

1.02 DEFINITIONS

A. Substitutions: Changes in products, materials, equipment, and methods of construction from those required by the Contract Documents and proposed by Contractor.

1.03 ACTION SUBMITTALS

A. Substitution Requests – General:

1. Substitution requests shall be submitted only after award of Contract. Substitution requests submitted during the bidding period will not be reviewed and will be returned without action.

2. Substitution requests shall be submitted within sixty (60) calendar days following Notice to Proceed, except as otherwise permitted for substitution cause as defined herein.

3. Substitution requests submitted after this period will not be considered unless justified by conditions beyond the Contractor's control, including but not limited to material unavailability, regulatory changes, or documented supply chain disruptions, and approved by the MDOT Architect.

4. Approval of a substitution does not relieve the Contractor of responsibility for compliance with the Contract Documents.

B. Substitution Requests: Within sixty (60) days after Notice to Proceed, submit four copies (or electronic copies as permitted by MDOT Architect) of each request for consideration. Include Specification Section number and title and Drawing numbers and titles. Substitution requests submitted outside the time period specified above will not be reviewed unless permitted under Paragraph 1.03A.3.

1. Substitution Request Form: Use facsimile of form provided in this section.

2. Documentation: Show compliance with requirements for substitutions and the following, as applicable:

a. **Statement indicating why specified product or fabrication or installation cannot be provided, if applicable.**

b. **Coordination information, including a list of changes or revisions needed to other parts of the Work and to construction performed by Owner and separate contractors, that will be necessary to accommodate proposed substitution.**

c. **Detailed comparison of significant qualities of proposed substitution with those of the Work specified. Include annotated copy of applicable Specification Section. Significant qualities may include attributes such as performance, weight, size, durability, visual effect, sustainable design characteristics, warranties, and specific features and requirements indicated. Indicate deviations, if any, from the Work specified.**

d. **Product Data, including drawings and descriptions of products and fabrication and installation procedures.**

e. **Samples, where applicable or requested.**

f. **Certificates and qualification data, where applicable or requested.**

g. **List of similar installations for completed projects with project names and addresses and names and addresses of architects and owners.**

h. **Material test reports from a qualified testing agency indicating and interpreting test results for compliance with requirements indicated.**

i. **Research reports evidencing compliance with building code in effect for Project, from ICC-ES (International Code Council Evaluation Service).**

j. **Detailed comparison of Contractor's construction schedule using proposed substitution with products specified for the Work, including effect on the overall Contract Time. If specified product or method of construction cannot be provided within the Contract Time, include letter from manufacturer, on manufacturer's letterhead,**

stating date of receipt of purchase order, lack of availability, or delays in delivery.

k. Cost information, including a proposal of change, if any, in the Contract Sum.

l. Contractor's certification that proposed substitution complies with requirements in the Contract Documents except as indicated in substitution request, is compatible with related materials, and is appropriate for applications indicated.

Contractor's waiver of rights to additional payment or time for impacts arising from the proposed substitution, except to the extent such impacts are caused by factors beyond the Contractor's control or by actions or inactions of the Owner or Architect.

3. Where more than one manufacturer's product is specified for one use (and no substitution is proposed), the Drawings have been prepared for the product listed first in the Specifications;

   a. Contractor will be responsible for any changes in the building construction required because of product selection, and shall make any such changes to the satisfaction of the Architect, at no cost to MDOT.

4. MDOT Architect's Action: If necessary, MDOT Architect will request additional information or documentation for evaluation within ten days of receipt of a request for substitution. MDOT Architect will notify Contractor through Project Engineer of acceptance or rejection of proposed substitution within fifteen (15) calendar days of receipt of request, or ten (10) calendar days of receipt of additional information or documentation, whichever is later.

   a. Forms of Acceptance: Change Order, Construction Change Directive, or Architect's Supplemental Instructions for minor changes in the Work.

   Use product specified if MDOT Architect does not issue a decision within the time allocated. Contractor may submit written notice requesting a determination. Failure to respond may be considered in evaluating a request for extension of time, but shall not constitute approval, and Contractor shall not proceed with substitution without written approval.

1.04 QUALITY ASSURANCE

A. Compatibility of Substitutions: Investigate and document compatibility of proposed substitution with related products and materials. Engage a qualified testing agency to perform compatibility tests recommended by manufacturers.

PART 2 - PRODUCTS

2.01 SUBSTITUTIONS

A. Substitutions for Cause: Submit requests for substitution immediately on discovery of need for change, but not later than 15 days prior to time required for preparation and review of related submittals. Only one substitution request per product will be considered unless additional request are approved by the MDOT Architect.

1. Conditions: Architect will consider Contractor's request for substitution when the following conditions are satisfied:

   a. Requested substitution is consistent with the Contract Documents and will produce indicated results.

b. **Contractor has personally investigated proposed product or method, compared the product specified with the proposed substitution, and determined that it is equal or superior in all respects to that specified.**
c. **Cost data is complete and includes all related costs under his Contract.**
d. **Contractor waives claims for additional costs and time arising from the substitution, except to the extent caused by factors beyond the Contractor's control or by actions or inactions of the Owner or Architect.**
e. **Requested substitution will not adversely affect Contractor's construction schedule.**
f. **Requested substitution has received necessary approvals of authorities having jurisdiction.**
g. **Requested substitution is compatible with other portions of the Work.**
h. **Requested substitution has been coordinated with other portions of the Work.**
i. **Requested substitution provides specified warranty.**

B. Substitutions for Convenience: Architect will consider requests for substitution. Only one substitution request per product will be considered unless additional requests are approved by the MDOT Architect.

1. Conditions: Architect will consider Contractor's request for substitution when the following conditions are satisfied:

a. **Requested substitution offers Owner a substantial advantage in cost, time, energy conservation, or other considerations, after deducting additional responsibilities Owner must assume. Owner's additional responsibilities may include compensation to MDOT Architect's Consultants for redesign and evaluation services, increased cost of other construction by Owner, and similar considerations.**
b. **Contractor has personally investigated proposed product or method, compared the product specified with the proposed substitution, and determined that it is equal or superior in all respects to that specified.**
c. **Cost data is complete and includes all related costs under his Contract.**
d. **Contractor waives claims for additional costs and time arising from the substitution, except to the extent caused by factors beyond the Contractor's control or by actions or inactions of the Owner or Architect.**
e. **Requested substitution does not require extensive revisions to the Contract Documents.**
f. **Requested substitution is consistent with the Contract Documents and will produce indicated results.**
g. **Requested substitution will not adversely affect Contractor's construction schedule.**
h. **Requested substitution has received necessary approvals of authorities having jurisdiction.**
i. **Requested substitution is compatible with other portions of the Work.**
j. **Requested substitution has been coordinated with other portions of the Work.**
k. **Requested substitution provides specified warranty.**

PART 3 - EXECUTION

PRODUCT SUBSTITUTION REQUEST FORM

PROJECT:_____ PROJECT NO._____

OWNER: _____

CONTRACTOR:_____

ARCHITECT:_____

_____

CONTRACTOR'S REQUEST, WITH SUPPORTING DATA

1. Section of the Specifications to which this request applies:

   _____

   [ ] Product data for specified item and proposed substitution is attached (description of product, reference standards, performance and test data).

   [ ] Sample is attached

2. Itemized comparison of proposed substitution with product specified.

	ORIGINAL PRODUCT	SUBSTITUTION
Name, brand	_____	_____
Catalog No.	_____	_____
Manufacturer	_____	_____

Significant variations:_____

_____

Reason for Substitution:

_____

_____

3. Proposed change in Contract Sum:

   Credit to Owner: $_____

   Additional Cost to Owner: $_____

4. Effect of the proposed substitution on the Work:

   Contract Time: _____

CONTRACTORS STATEMENT OF CONFORMANCE OF PROPOSED SUBSTITUTION TO CONTRACT REQUIREMENTS

I / We have investigated the proposed substitution. I / We

1. Believe that it is equal or superior in all respects to originally specified product, except as stated in 2. above;
2. Will provide same warranty as required in Contract Documents;
3. Have included all cost data and cost implications of proposed substitution; including, if required, costs to other contractors, and redesign and special inspection costs caused by use of proposed substitution;
4. Will coordinate incorporation of proposed substitution in the Work;
5. Will modify other parts of the Work as may be needed, to make all parts of the Work complete and functioning;
6. Have verified that use of this substitution conforms to all applicable codes.
7. Waive future claims for added cost to Owner caused by proposed substitution.

CONTRACTOR_____DATE:_____
Signature

MDOT ARCHITECT'S REVIEW AND ACTION

___ Accepted

___ Not Accepted

___ Provide more information in the following categories and resubmit _____

___ Sign Contractor's Statement of Conformance and resubmit

___ Proposed substitution is accepted, with the following conditions:

_____

_____

Change Order (Supplemental Agreements) will make the following changes:

(Add to) (Deduct from) Contract Sum: $_____

(Add to) (Deduct from) Contract Time: _____days

ARCHITECT:_____DATE_____

OWNER: _____DATE_____

___Accepted ___Not accepted

END OF SECTION

SECTION 01 33 00
SUBMITTAL PROCEDURES – ADDENDUM NO. 2

PART 1 - GENERAL

1.01 SUMMARY

A. Section includes requirements for the submittal schedule and administrative and procedural requirements for submitting Shop Drawings, Product Data, Samples, and other submittals.

B. Scope: Submit to the MDOT Architectural Services Unit shop drawings, product data, and samples required by Specification Sections. Faxed submittals WILL NOT be accepted. DO NOT submit Material Safety Data Sheets for approval. Refer to Section 01 25 00 – Substitution Procedures and Section 01 60 00 – Product Requirements, for requirements concerning products that will be acceptable on this Project.

C. Related Requirements:

1. Section 01 32 00 "Construction Progress Documentation" for submitting schedules and reports, including Contractor's construction schedule.

2. Section 01 78 23 "Operation and Maintenance Data" for submitting operation and maintenance manuals.
3. Section 01 78 39 "Project Record Documents" for submitting record Drawings, record Specifications, and record Product Data.
4. Section 01 79 00 "Demonstration and Training" for submitting video recordings of demonstration of equipment and training of Owner's personnel.

D. All submittals shall comply with Section 01 60 00 – Product Requirements, including BABA provisions. Provide project-specific BABA certification with each submittal. Submittals lacking required documentation will be rejected without review.

1.02 DEFINITIONS

A. Action Submittals: Written and graphic information and physical samples that require MDOT Architect's responsive action.

B. Informational Submittals: Written and graphic information and physical samples that do not require MDOT Architect's responsive action. Submittals may be rejected for not complying with requirements.

1.03 ACTION SUBMITTALS

A. Submittal Schedule: Submit a schedule of submittals, arranged in chronological order by dates required by construction schedule. Include time required for review, ordering, manufacturing, fabrication, and delivery when establishing dates. Include additional time required for making corrections or revisions to submittals noted by MDOT Architect and additional time for handling and reviewing submittals required by those corrections.

1. Acceptance of submittal items will not preclude rejection of these items upon discovery of defects in them prior to final acceptance of completed Work.

1.04 SUBMITTAL ADMINISTRATIVE REQUIREMENTS

A. Architect's Digital Data Files: Electronic copies of digital data files of the Contract Drawings will not be provided by Architect for Contractor's use in preparing submittals.

B. Coordination: Coordinate preparation and processing of submittals with performance of construction activities.

1. Coordinate each submittal with fabrication, purchasing, testing, delivery, other submittals, and related activities that require sequential activity.

2. Coordinate transmittal of different types of submittals for related parts of the Work so processing will not be delayed because of need to review submittals concurrently for coordination.

a. MDOT Architect reserves the right to withhold action on a submittal requiring coordination with other submittals until related submittals are received.

C. Processing Time: Allow time for submittal review, including time for resubmittals, as follows. Time for review shall commence on MDOT Architect's receipt of submittal. No extension of the Contract Time will be authorized because of failure to transmit submittals enough in advance of the Work to permit processing, including resubmittals. However, Contractor may be entitled to an equitable extension of time to the extent delays are caused by Owner, Architect, or reviewing authorities, and not by Contractor’s failure to submit complete and compliant submittals.

1. Initial Review: Allow 15 days for initial review of each submittal. Allow additional time if coordination with subsequent submittals is required. MDOT Architect will advise Contractor when a submittal being processed must be delayed for coordination.
2. Partial submittals are not acceptable and will be considered non-responsive and returned without review, unless expressly approved in advance by the MDOT Architect for staged review. Any approved partial submittals shall be clearly identified and coordinated and shall not adversely affect the Project schedule.
3. Resubmittal Review: Allow 15 business days for review of each resubmittal.

D. Rejection and Resubmittal:
1. Submittals that are incomplete or noncompliant may be returned without review; however, Contractor shall be provided written notice identifying deficiencies and a reasonable opportunity to cure.
2. Submittals missing required certifications (including BABA documentation) may be rejected; however, such rejections shall not constitute Contractor delay unless Contractor fails to correct within a reasonable period.

E. Paper Submittals: Place a permanent label or title block on each submittal item for identification. Paper Submittals are required for sheets larger than 11 by 17 inches.

1. Indicate name of firm or entity that prepared each submittal on label or title block.
2. Provide a space approximately 3 by 4 inches on label or beside title block to record Contractor's review and approval markings and action taken by MDOT Architect.
3. Include the following information for processing and recording action taken:

a. Project name.
b. Date.
c. Name of Architect.
d. Name of Contractor.
e. Name of subcontractor.
f. Name of supplier.
g. Name of manufacturer.

h. Submittal number or other unique identifier, including revision identifier.

1) Submittal number shall use Specification Section number followed by a decimal point and then a sequential number (e.g., 061000.01). Resubmittals shall include an alphabetic suffix after another decimal point (e.g., 061000.01.A).

i. Number and title of appropriate Specification Section.
j. Drawing number and detail references, as appropriate.
k. Location(s) where product is to be installed, as appropriate.
l. Other necessary identification.

4. Transmittal for Paper Submittals: Accompany submittals with transmittal letter, containing data, project title and number; Contractor's name and address; the number of each Shop Drawings, product data and samples submitted; notification of deviations from Contract Documents; and other pertinent data. Submittals shall be sent to MDOT Architect for review or distribution to Consultants, with copy of Transmittal Letter sent to Project Engineer. MDOT Architect will return without review submittals received from sources other than Contractor.

a. Transmittal Form for Paper Submittals: Use AIA Document G810 or CSI Form 12.1A.

b. Transmittal Form for Paper Submittals: Provide locations on form for the following information:
1) Project name.
2) Date.
3) Destination (To:).
4) Source (From:).
5) Name and address of Architect.
6) Name of Contractor.
7) Name of firm or entity that prepared submittal.
8) Names of subcontractor, manufacturer, and supplier.
9) Category and type of submittal.
10) Submittal purpose and description.
11) Specification Section number and title.
12) Specification paragraph number or drawing designation and generic name for each of multiple items.
13) Drawing number and detail references, as appropriate.
14) Transmittal number**,** numbered consecutively.
15) Submittal and transmittal distribution record.
16) Remarks.
17) Signature of transmitter.
18) Contractor’s stamp, initialed or signed, certifying the review of submittal, verification of field measurements, and compliance with

Contract Documents PRIOR to submitting to the MDOT Architectural Services Unit.

F. Electronic Submittals: Electronic pdf submittals are required for pages smaller than 11 by 17 inches. Identify and incorporate information in each electronic submittal file as follows:

1. Assemble complete submittal package into a single indexed file incorporating submittal requirements of a single Specification Section and transmittal form with links enabling navigation to each item.

2. Name file with submittal number or other unique identifier, including revision identifier.

   a. File name shall use project identifier and Specification Section number followed by a decimal point and then a sequential number (e.g., LNHS-061000.01). Re-submittals shall include an alphabetic suffix after another decimal point (e.g., LNHS-061000.01.A).

3. Provide means for insertion to permanently record Contractor's review and approval markings and action taken by MDOT Architect.

4. Transmittal Form for Electronic Submittals: Use electronic form acceptable to Project Engineer and MDOT Architect, containing the following information:
   a. Project name.
   b. Date.
   c. Name and address of Architect.
   d. Name of Contractor.
   e. Name of firm or entity that prepared submittal.
   f. Names of subcontractor, manufacturer, and supplier.
   g. Category and type of submittal.
   h. Submittal purpose and description.
   i. Specification Section number and title.
   j. Specification paragraph number or drawing designation and generic name for each of multiple items.
   k. Drawing number and detail references, as appropriate.
   l. Location(s) where product is to be installed, as appropriate.
   m. Related physical samples submitted directly.
   n. Indication of full or partial submittal.
   o. Transmittal number, numbered consecutively.
   p. Submittal and transmittal distribution record.
   q. Other necessary identification.
   r. Remarks.
5. Metadata: Include the following information as keywords in the electronic submittal file metadata:
   a. Project name.
   b. Number and title of appropriate Specification Section.
   c. Manufacturer name.
   d. Product name.

G. Options: Identify options requiring selection by MDOT Architect.

H. Deviations: Identify deviations from the Contract Documents on submittals.

I. Re-submittals: Make re-submittals in same form and number of copies as initial submittal.

1. Note date and content of previous submittal.
2. Note date and content of revision in label or title block and clearly indicate extent of revision.
3. Resubmit submittals until they are marked with approval notation from MDOT Architect's action stamp.

J. Required Attachments:
1. Each Shop Drawing submittal shall include a completed and signed Domestic Materials Self-Certification Form (AASHTO) submitted as part of the same PDF submittal package. Shop Drawings submitted without the required certification will be returned without review. Form is included at the end of this section.

K. Distribution of Submittals after Review:
1. Distribute copies of Shop Drawings and product data which carry MDOT Architect's / Consultant's stamp to: Project Engineer's File, Architectural Services Unit File, Architect's File (as required) / Electrical / Mechanical / Structural Engineer's File (as required), Materials' File (if concrete), Contractor's File, Job Site File, and Subcontractor, Supplier and/or Fabricator as necessary.
2. Distribute samples / color charts as directed. The Project Engineer, MDOT Architect and Consultant (as required) shall retain one of each.

L. Use for Construction: Retain complete copies of submittals on Project site. Use only final action submittals that are marked with approval notation from MDOT Architect's action stamp.

M. After an item has been accepted, no substitution or change in brand, make, manufacturer's catalog number, or characteristics will be considered except under the conditions listed below and in accordance with Section 01 25 00 - Substitution Procedures:

1. Satisfactory written evidence is presented to and approved by the Project Engineer, that manufacturer cannot make scheduled delivery of accepted item, or;
2. Item delivered has been rejected and substitution of a suitable item is an urgent necessity, or;
3. Other conditions became apparent which indicates acceptance of such substitute item to be in the best interest of the Owner.

All substitution requests shall be submitted and processed in accordance with Section 01 25 00- Substitution Procedures. The Contractor shall not proceed with any substitution without written approval. Where a substitution is not attributable to the Contractor, adjustments to the Contract Time and/or Contract Sum may be considered

PART 2 - PRODUCTS

2.01 SUBMITTAL PROCEDURES

A. General Submittal Procedure Requirements:

1. Submit electronic submittals for 81/2 by 11 inches and 11 by 17 inches submittals only) via email as pdf electronic files.

   a. MDOT Architect will return annotated file. Annotate and retain one copy of file as an electronic Project record document file.

2. Action Submittals: Submit eight paper (required for all submittals over 11 by 17 inches in size) copies of each submittal with additional number of copies, if required, by Contractor for distribution. MDOT Architect will return four copies, unless indicated otherwise.

3. Informational Submittals: Submit three paper copies or one electronic pdf copy of each submittal unless otherwise indicated. MDOT Architect will not return copies.
4. Certificates and Certifications Submittals: Provide a statement that includes signature of entity responsible for preparing certification. Certificates and certifications shall be signed by an officer or other individual authorized to sign documents on behalf of that entity.

   a. Provide a digital signature with digital certificate on electronically-submitted certificates and certifications where indicated.

   b. Provide a notarized statement on original paper copy certificates and certifications where indicated.

B. Product Data: Collect information into a single submittal for each element of construction and type of product or equipment.

1. If information must be specially prepared for submittal because standard published data are not suitable for use, submit as Shop Drawings, not as Product Data.
2. Mark each copy of each submittal to show which products and options are applicable.
3. Include the following information, as applicable:
   a. Manufacturer's catalog cuts.
   b. Manufacturer's product specifications.
   c. Standard color charts.
   d. Statement of compliance with specified referenced standards.
   e. Testing by recognized testing agency.
   f. Application of testing agency labels and seals.
   g. Notation of coordination requirements.
   h. Availability and delivery time information.

4. For equipment, include the following in addition to the above, as applicable:
   a. Wiring diagrams showing factory-installed wiring.
   b. Printed performance curves.
   c. Operational range diagrams.
   d. Clearances required to other construction, if not indicated on accompanying Shop Drawings.
5. Submit Product Data concurrent with Samples.

6. Submit Product Data in electronic pdf file.

C. Shop Drawings: Prepare Project-specific information, drawn accurately to scale. Do not base Shop Drawings on reproductions of the Contract Documents or standard printed data.

1. Preparation: Fully illustrate requirements in the Contract Documents. Include the following information, as applicable:

   a. Identification of products.

   b. Schedules.
   c. Compliance with specified standards.
   d. Notation of coordination requirements.
   e. Notation of dimensions (required) established by field measurement.
   f. Relationship and attachment to adjoining construction clearly indicated.
   g. Seal and signature of professional engineer if specified.

2. Sheet Size: Except for templates, patterns, and similar full-size drawings, submit Shop Drawings on sheets at least 11 by 17 inches, but no larger than 24 by 36 inches.

3. Submit Shop Drawings in the following format:

   a. Submit eight paper copies of each submittal with additional number of copies, if required, by Contractor for distribution. MDOT Architect will return four copies, unless indicated otherwise

D. Samples: Submit Samples for review of kind, color, pattern, and texture for a check of these characteristics with other elements and for a comparison of these characteristics between submittal and actual component as delivered and installed.

1. Transmit Samples that contain multiple, related components such as accessories together in one submittal package.
2. Identification: Attach label on unexposed side of Samples.
3. Disposition: Maintain sets of approved Samples at Project site, available for quality-control comparisons throughout the course of construction activity. Sample sets may be used to determine final acceptance of construction associated with each set.

   a. Samples that may be incorporated into the Work are indicated in individual Specification Sections. Such Samples must be in an undamaged condition at time of use.

   b. Samples not incorporated into the Work, or otherwise designated as Owner's property, are the property of Contractor.

4. Samples for Initial Selection: Submit manufacturer's color charts consisting of units or sections of units showing the full range of colors, textures, and patterns available.

   a. Number of Samples: Submit two full set(s) of available choices where color, pattern, texture, or similar characteristics are required to be selected from manufacturer's product line. MDOT Architect will return one sample with options selected.

b. If a specified product color is discontinued, Contractor shall notify Project Engineer promptly to determine if it affects other color selections.

5. Samples for Verification: Submit full-size units or Samples of size indicated, prepared from same material to be used for the Work, cured and finished in manner specified, and physically identical with material or product proposed for use, and that show full range of color and texture variations expected. Samples include, but are not limited to, the following: partial sections of manufactured or fabricated components; small cuts or containers of materials; complete units of repetitively used materials; swatches showing color, texture, and pattern; color range sets; and components used for independent testing and inspection.

a. Number of Samples: Submit four sets of Samples. Project Engineer and MDOT Architect will retain two Sample sets; remainder will be returned. Mark up and retain one returned Sample set as a project record sample.

E. Field Samples and Mock-Ups: Erect on Project Site at location acceptable to Project Engineer.

1. Construct each sample or mock-up complete, including Work of all trades required in the finished Work. Field Samples are used to determine standards in materials, color, texture, workmanship, and overall appearance.
2. Work shall not be allowed using these materials until the mock-up is approved.
3. The mock-up shall not be destroyed, until after the Work it represents is finished, without permission of the Project Engineer. This mock-up shall be used as a standard to compare to the Work it represents for color, craftsmanship, overall appearance, and how the different materials make up the whole system.

F. Product Schedule: As required in individual Specification Sections, prepare a written summary indicating types of products required for the Work and their intended location. Include the following information in tabular form:

1. Submit product schedule in the following format:

a. PDF Electronic pdf file for sheets less than 11 by 17 inches.

b. Four paper copies (for sheets larger than 11 by 17 inches) of product schedule or list unless otherwise indicated. Architect will return two copies.

G. Coordination Drawings Submittals: Comply with requirements specified in Section 01 31 00 "Project Management and Coordination."

H. Contractor's Construction Schedule: Comply with requirements specified in Section 01 32 00 "Construction Progress Documentation."

I. Application for Payment and Schedule of Values: Comply with requirements specified in Section 01 29 00 "Payment Procedures.

J. Test and Inspection Reports and Schedule of Tests and Inspections Submittals: Comply with requirements specified in Section 01 40 00 "Quality Requirements."

K. Closeout Submittals and Maintenance Material Submittals: Comply with requirements specified in Section 01 77 00 "Closeout Procedures."

L. Maintenance Data: Comply with requirements specified in Section 01 78 23 "Operation and Maintenance Data."

M. Qualification Data: Prepare written information that demonstrates capabilities and experience of firm or person. Include lists of completed projects with project names and addresses, contact information of architects and owners, and other information specified.

N. Welding Certificates: Prepare written certification that welding procedures and personnel comply with requirements in the Contract Documents. Submit record of Welding Procedure Specification and Procedure Qualification Record on AWS forms. Include names of firms and personnel certified.

O. Installer Certificates: Submit written statements on manufacturer's letterhead certifying that Installer complies with requirements in the Contract Documents and, where required, is authorized by manufacturer for this specific Project.

P. Manufacturer Certificates: Submit written statements on manufacturer's letterhead certifying that manufacturer complies with requirements in the Contract Documents. Include evidence of manufacturing experience where required.

Q. Product Certificates: Submit written statements on manufacturer's letterhead certifying that product complies with requirements in the Contract Documents.

R. Material Certificates: Submit written statements on manufacturer's letterhead certifying that material complies with requirements in the Contract Documents.

S. Material Test Reports: Submit reports written by a qualified testing agency, on testing agency's standard form, indicating and interpreting test results of material for compliance with requirements in the Contract Documents.

T. Product Test Reports: Submit written reports indicating that current product produced by manufacturer complies with requirements in the Contract Documents. Base reports on evaluation of tests performed by manufacturer and witnessed by a qualified testing agency, or on comprehensive tests performed by a qualified testing agency.

U. Research Reports: Submit written evidence, from a model code organization acceptable to authorities having jurisdiction, that product complies with building code in effect for Project.

V. Schedule of Tests and Inspections: Comply with requirements specified in Section 01 40 00 "Quality Requirements."

W. Preconstruction Test Reports: Submit reports written by a qualified testing agency, on testing agency's standard form, indicating and interpreting results of tests performed before installation of product, for compliance with performance requirements in the Contract Documents.

X. Compatibility Test Reports: Submit reports written by a qualified testing agency, on testing agency's standard form, indicating and interpreting results of compatibility tests

performed before installation of product. Include written recommendations for primers and substrate preparation needed for adhesion.

Y. Field Test Reports: Submit written reports indicating and interpreting results of field tests performed either during installation of product or after product is installed in its final location, for compliance with requirements in the Contract Documents.

Z. Design Data: Prepare and submit written and graphic information, including, but not limited to, performance and design criteria, list of applicable codes and regulations, and calculations. Include list of assumptions and other performance and design criteria and a summary of loads. Include load diagrams if applicable. Provide name and version of software, if any, used for calculations. Include page numbers.

2.02 DELEGATED-DESIGN SERVICES

A. Performance and Design Criteria: Where professional design services or certifications by a design professional are specifically required of Contractor by the Contract Documents, provide products and systems complying with specific performance and design criteria indicated.

1. If criteria indicated are not sufficient to perform services or certification required, submit a written request for additional information to MDOT Architect.

B. Delegated-Design Services Certification: In addition to Shop Drawings, Product Data, and other required submittals, submit digitally signed PDF electronic file (optional) and eight paper copies of certificate, signed and sealed by the responsible design professional, for each product and system specifically assigned to Contractor to be designed or certified by a design professional.

1. Indicate that products and systems comply with performance and design criteria in the Contract Documents. Include list of codes, loads, and other factors used in performing these services.

PART 3 - EXECUTION

3.01 CONTRACTOR'S REVIEW

A. Action and Informational Submittals: Review each submittal and check for coordination with other Work of the Contract and for compliance with the Contract Documents. Note corrections and field dimensions. Mark with approval stamp before submitting to MDOT Architectural Services Unit.

B. Project Closeout and Maintenance Material Submittals: See requirements in Section 01 77 00 "Closeout Procedures."

C. Approval Stamp: Stamp each submittal with a uniform, approval stamp. Include Project name and location, submittal number, Specification Section title and number, name of reviewer, date of Contractor's approval, and statement certifying that submittal has been reviewed, checked, and approved for compliance with the Contract Documents.

D. Notify the Project Engineer in writing at the time of submission, of deviations in submittals from requirements of Contract Documents.

E. Contractor's responsibility for deviations in submittals from requirements of Contract Documents is not relieved by review of submittals unless specifically accepted in writing.

F. Review by the MDOT Architect and/or Consultant is for general conformance with the design concept and Contract Documents only and shall not relieve the Contractor of responsibility for errors, omissions, or deviations from the Contract Documents, nor shift design responsibility except where delegated design is explicitly required.

G. Do not order materials or begin Work requiring submittals until the return of submittals bearing MDOT Architect / Consultant's stamp and initials indicating review.

3.02 MDOT ARCHITECT'S / CONSULTANTS' ACTION

A. General: MDOT Architect will not review submittals that do not bear Contractor's approval stamp and will return them without action.

B. Action Submittals: MDOT Architect / Consultants will review each submittal with reasonable promptness, consistent with the Project schedule, for design concept of Project and information given in Contract Documents, make marks to indicate corrections or revisions required, and return submittals to the Architectural Services Unit, which will retain one copy and forward one copy to the Project Engineer, one copy to the Materials Engineer (if concrete), and one (or the remainder (if paper submittal) to the Contractor. MDOT Architect / Consultants will stamp each submittal with an action stamp and will mark appropriately to indicate action. Consultants will retain one copy of reviewed submittals.

C. Informational Submittals: MDOT Architect will review each submittal and will not return it, or will return it if it does not comply with requirements. MDOT Architect will forward each submittal to appropriate party.

Incomplete submittals are unacceptable, may be returned without review as nonresponsive. Contractor shall be provided written notice identifying deficiencies and shall promptly correct and resubmit. Submittals not required by the Contract Documents may not be reviewed and may be discarded. Failure to review a required submittal within the specified time, after receipt of written notice from the Contractor, may be considered in evaluating a request for time extension, but shall not constitute approval.

END OF SECTION

SECTION 01 60 00
PRODUCT REQUIREMENTS – ADDENDUM NO. 2

PART 1 - GENERAL

SUMMARY

Section includes administrative and procedural requirements for selection of products for use in Project; product delivery, storage, and handling; manufacturers' standard warranties on products; special warranties; and comparable products.

Related Requirements: Section 01 25 00 "Substitution Procedures" for requests for substitutions.

1.01 DEFINITIONS

Products: Items obtained for incorporating into the Work, whether purchased for Project or taken from previously purchased stock. The term "product" includes the terms "material," "equipment," "system," and terms of similar intent.

1. Named Products: Items identified by manufacturer's product name, including make or model number or other designation shown or listed in manufacturer's published product literature that is current as of date of the Contract Documents.
2. New Products: Items that have not previously been incorporated into another project or facility. Products salvaged or recycled from other projects are not considered new products.
3. Comparable Product: Product that is demonstrated and approved through submittal process to have the indicated qualities related to type, function, dimension, in-service performance, physical properties, appearance, and other characteristics that equal or exceed those of specified product.

Basis-of-Design Product Specification: A specification in which a specific manufacturer's product is named and accompanied by the words "basis-of-design product," including make or model number or other designation, to establish the significant qualities related to type, function, dimension, in-service performance, physical properties, appearance, and other characteristics for purposes of evaluating comparable products of additional manufacturers named in the specification.

1.02 CONTRACTOR OPTIONS

A. For products specified only by reference standards, select any product meeting standards, by any reputable manufacturer.

B. For products specified by naming several products or manufacturers, select any product and manufacturer named.

1. Where more than one manufacturer's product is specified for one use, the Drawings have been prepared for the one listed first; and building adjustments may be necessary to accommodate the others.

2. The Contractor will be responsible for any changes in the building construction required because of product selection, and shall make any such changes to the satisfaction of the Architect, at no cost to the Owner.

C. For product specified by naming one or more products, but indicating the option of se-

lecting equivalent products by stating "or approved equal / equal as approved", or "or equal" after specified product, Contractor must submit request, as required for substitution, for any product not specifically named.

D. In making request for substitution, bidder / contractor represents:

1. He has personally investigated proposed product or method and determined that it is equal or superior in all respects to that specified and that no product involved contains ingredients regulated by the EPA or which are carcinogenic or toxic.

2. He will provide the same guarantee for substitution as for product or method specified.

3. He will coordinate installation of accepted substitution into work, making those changes required for work to be complete in all respects.

4. **He waives all claims for additional costs related to substitution which consequently become apparent.**

5. Cost data is complete and includes all related costs under his contract.

E. Architect is the final judge of equality of all substitutions.

F. Requests for substitution or comparable products shall be submitted and evaluated in accordance with Section 01 25 00 'Substitution Procedures.' Approval of a product as comparable for submittal purposes does not relieve the Contractor of compliance with substitution requirements applicable after Contract award.

G. Substitution requests and comparable product requests shall NOT be submitted during the bidding period and shall be submitted only after Notice to Proceed in accordance with Section 01 25 00 – Substitution Procedures.

H. Where product specifications include the term "or equal" or list multiple manufacturers, such language does not permit substitutions during bidding and applies only to post-award substitution requests submitted in accordance with Section 01 25 00.

I. For purposes of these Contract Documents, the terms "or equal" and "or approved equal" are used interchangeably; in all cases, substitutions are governed by Division 01 requirements and are not permitted during bidding.

1.03 ACTION SUBMITTALS

Comparable Product Requests: Submit request for consideration of each comparable product only after Notice to Proceed. Comparable product requests are for evaluation of equivalency only and do not constitute approval of a substitution unless reviewed and approved in accordance with Section 01 25 00.

Identification Requirements: Identify product or fabrication or installation method to be replaced. Include Specification Section number and title and Drawing numbers and titles.

1. MDOT Architect's Action: If necessary, MDOT Architect will request additional information or documentation for evaluation within one week of receipt of a comparable product request. MDOT Architect will notify Contractor of approval or rejection of proposed comparable product request within 15 days of receipt of

request, or ten days of receipt of additional information or documentation, whichever is later.

a. Form of Approval: As specified in Section 01 33 00 "Submittal Procedures."
b. Use product specified if Architect does not issue a decision on use of a comparable product request within time allocated.

Basis-of-Design Product Specification Submittal: Comply with requirements in Section 01 33 00 "Submittal Procedures." Show compliance with requirements.

1.04 QUALITY ASSURANCE

Compatibility of Options: If Contractor is given option of selecting between two or more products for use on Project, select product compatible with products previously selected, even if previously selected products were also options.

1.05 PRODUCT DELIVERY, STORAGE, AND HANDLING

Deliver, store, and handle products using means and methods that will prevent damage, deterioration, and loss, including theft and vandalism. Comply with manufacturer's written instructions.

Delivery and Handling:

1. Schedule delivery to minimize long-term storage at Project site and to prevent overcrowding of construction spaces.
2. Coordinate delivery with installation time to ensure minimum holding time for items that are flammable, hazardous, easily damaged, or sensitive to deterioration, theft, and other losses.
3. Deliver products to Project site in an undamaged condition in manufacturer's original sealed container or other packaging system, complete with labels and instructions for handling, storing, unpacking, protecting, and installing.
4. Inspect products on delivery to determine compliance with the Contract Documents and to determine that products are undamaged and properly protected.

Storage:

5. Store products to allow for inspection and measurement of quantity or counting of units.
6. Store materials in a manner that will not endanger Project structure.
7. Store products that are subject to damage by the elements, under cover in a weather tight enclosure above ground, with ventilation adequate to prevent condensation.
8. Protect foam plastic from exposure to sunlight, except to extent necessary for period of installation and concealment.
9. Comply with product manufacturer's written instructions for temperature, humidity, ventilation, and weather-protection requirements for storage.
10. Protect stored products from damage and liquids from freezing.

1.06 PRODUCT WARRANTIES

Warranties specified in other Sections shall be in addition to, and run concurrent with, other warranties required by the Contract Documents. Manufacturer's disclaimers and limitations on product warranties do not relieve Contractor of obligations under requirements of the Contract Documents.

1. Manufacturer's Warranty: Written warranty furnished by individual manufacturer for a particular product and specifically endorsed by manufacturer to Owner.

2. Special Warranty: Written warranty required by the Contract Documents to provide specific rights for Owner.

Special Warranties: Prepare a written document that contains appropriate terms and identification, ready for execution.

3. Manufacturer's Standard Form: Modified to include Project-specific information and properly executed.

4. Specified Form: When specified forms are included with the Specifications, prepare a written document using indicated form properly executed.

5. Refer to other Sections for specific content requirements and particular requirements for submitting special warranties.

Submittal Time: Comply with requirements in Section 01 77 00 "Closeout Procedures."

1.07 BUILD AMERICA, BUY AMERICA (BABA) REQUIREMENTS

General:

1. This Project is subject to the Build America, Buy America Act (BABA), as established under the Infrastructure Investment and Jobs Act (IIJA), Pub. L. 117-58, and implemented in accordance with 2 CFR Part 184 and applicable federal guidance.

2. Bidders are advised that the BABA requirements will be strictly enforced.

3. Bidders are responsible for verifying full compliance of all materials and products prior to submission of bid. Failure to do so shall not be grounds for substitution, delay, or change in Contract Sum, except as may be allowed under BABA and approved by MDOT.

4. Basis-of-design products and named manufacturers are not guaranteed to comply with BABA requirements. Contractor shall not rely on basis-of-design designations as confirmation of compliance. Contractor is solely responsible for verifying that all proposed products meet BABA requirements prior to bid. If the basis-of-design product is determined to not comply with BABA requirements, Contractor shall provide a compliant product meeting the design intent at no additional cost to the Owner and without adjustment to the Contract Sum.

Domestic Manufacturing Requirements (applicable to all Divisions of Work):

1. Iron and Steel: This requirement applies to all products consisting wholly or predominantly of iron or steel. All iron and steel must be melted and manufactured in the United States. Submit Mill Test Reports (MTRs) identifying domestic melt location with each submittal. Bidders shall base bids on BABA-compliant domestic melt steel.

2. Manufactured Products: All manufactured products permanently incorporated into the Project must be manufactured in the United States. A product is “manufactured” when it is completed in the form in which the product was procured and the form in which it will be brought to the work site (23 CFR 635.410(c)(1)(iv) and 635.410(c)(2)). Such activity must occur in the United States for the manufactured product to be compliant for this Project. Bidders shall confirm compliance with manufacturers prior to submission of the bid.

3. Construction Materials: All manufacturing processes for construction materials shall occur in the United States.

Aluminum (Construction Materials Only): Where aluminum is furnished as a construction material, provide documentation confirming that all manufacturing processes, including billet production, extrusion, and finishing, occur in the United States.

a. Glass: All manufacturing processes including float, coating, and fabrication shall occur in the United States.

4. Classification of Products: Where a product may be interpreted to fall within more than one BABA category, the most stringent applicable requirement shall govern, as determined by the Owner. Products consisting wholly or predominantly of iron or steel shall be governed by the iron and steel requirements, regardless of system configuration or field assembly.

Compliance Documentation:

1. Provide manufacturer's certification of domestic origin for all products.

2. Provide BABA compliance documentation with each product submittal.

3. Failure to provide required BABA documentation shall constitute grounds for rejection.

Contractors shall not assume the availability of waivers. Where federal waivers are granted by FHWA, such waivers shall govern. If compliance requirements materially change after bid due to such waivers, adjustments to the Contract Time and/or Contract Sum may be considered in accordance with the Contract Documents.

Conflicting Requirements: Where individual Specification Sections include language stating that waivers will not be considered, such language is hereby deleted and superseded. Waiver provisions shall be governed exclusively by this Section and applicable FHWA requirements.

PART 2 - PRODUCTS

2.01 PRODUCT SELECTION PROCEDURES

General Product Requirements: Provide products that comply with the Contract Documents, are undamaged and, unless otherwise indicated, are new at time of installation.

1. Provide products complete with accessories, trim, finish, fasteners, and other items needed for a complete installation and indicated use and effect.
2. Standard Products: If available, and unless custom products or nonstandard options are specified, provide standard products of types that have been produced and used successfully in similar situations on other projects.
3. Owner reserves the right to limit selection to products with warranties not in conflict with requirements of the Contract Documents.
4. Where products are accompanied by the term "as selected," MDOT Architect will make selection.
5. Descriptive, performance, and reference standard requirements in the Specifications establish salient characteristics of products.

Product Selection Procedures:

6. Products specified only by reference standards, select any product meeting standards by any manufacturer.
7. Products specified by naming several (minimum of three) products or manufacturers, select any product and manufacturer named. Contractor must submit request, as required for substitution, for any product not specifically named and GIVE REASONS for not using product specified. Requests referenced in this Article are substitution requests and shall be submitted only after Notice to Proceed in accordance with Section 01 25 00.will not be granted unless reasons are considered justified.
8. Products specified by naming one or more products, but indicating the option of selecting equivalent products by stating "or approved equal" after specified product, Contractor must submit request, as required for substitution, for any product not specifically named.
9. Products specified by naming only one product and manufacturer may be considered for substitution if demonstrated to be equal in all respects and if approved in accordance with Section 01 25 00 ‘Substitution Procedures.
10. Products specified by naming only one product and manufacturer and stating no substitutions will be accepted, there is no option and no substitutions will be allowed.

Visual Matching Specification: Where Specifications require "match Architect's sample", provide a product that complies with requirements and matches Architect's sample. Architect's decision will be final on whether a proposed product matches.

11. If no product available within specified category matches and complies with other specified requirements, comply with requirements in Section 01 25 00 "Substitution Procedures" for proposal of product.

Visual Selection Specification: Where Specifications include the phrase "as selected by Architect from manufacturer's full range" or similar phrase, select a product that complies with requirements. Architect will select color, gloss, pattern, density, or texture from manufacturer's product line that includes both standard and premium items.

2.02 COMPARABLE PRODUCTS

Conditions for Consideration: Comparable product requests will be considered only after Notice to Proceed. Architect will consider Contractor's request for comparable product when the following conditions are satisfied. If the following conditions are not satisfied, Architect may return requests without action, except to record noncompliance with these requirements:

1. Evidence that the proposed product does not require revisions to the Contract Documents, is consistent with the Contract Documents and will produce the indicated results, and that it is compatible with other portions of the Work.
2. Detailed comparison of significant qualities of proposed product with those named in the Specifications. Significant qualities include attributes such as performance, weight, size, durability, visual effect, and specific features and requirements indicated.
3. Evidence that proposed product provides specified warranty.
4. List of similar installations for completed projects with project names and addresses and names and addresses of architects and owners, if requested.

5. Samples, if requested.

PART 3 - EXECUTION (Not Used)

END OF SECTION

SECTION 08 33 00
ROLLING DOORS – SERVICE DOORS – ADDENDUM NO. 2

1.0 GENERAL

1.1 RELATED DOCUMENTS

1.1.1 All of the Contract Documents, including General and Supplementary Conditions and Division 1, General Requirements, apply to the work of this section.

1.2 SUMMARY

1.2.1 The work of this section to include all exterior rolling doors.

1.3 SUBMITTALS

1.3.1 Product Data: Submit manufacturer's product data and installation instructions for each type of rolling door. Include both published data and any specific data prepared for this project.

1.3.2 Shop Drawings: Submit shop drawing for approval prior to fabrication. Include detailed plans, elevations, details of framing members, required clearances, anchors, and accessories. Include relationship with adjacent materials.

1.4 QUALITY ASSURANCE

1.4.1 Manufacturer: Rolling doors shall be manufactured by a firm with a minimum of five years experience in the fabrication and installation of rolling doors. Manufacturers proposed for use, which are not named in these specifications, shall submit evidence of ability to meet performance and fabrication requirements specified, and include a list of five projects of similar design and complexity completed within the past five years.

1.4.2 Installer: Installation of rolling doors shall be performed by the authorized representative of the manufacturer.

1.4.3 Single-Source Responsibility: Provide doors, guides, motors, and related primary components from one manufacturer for each type of door. Provide secondary components from source acceptable to manufacturer of primary components.

1.4.4 Pre-Installation Conference: Schedule and convene a pre-installation conference just prior to commencement of field operations, to establish procedures to maintain optimum working conditions and to coordinate this work with related and adjacent work.

1.5 DELIVERY, STORAGE, AND HANDLING

1.5.1 Deliver materials and products in labeled protective packages. Store and handle in strict compliance with manufacturer's instructions and recommendations. Protect from damage from weather, excessive temperatures and construction operations.

2.0 PRODUCTS

2.1 ACCEPTABLE MANUFACTURER

2.1.1 Provide rolling doors by Overhead Door Corporation, Pennsylvania Division; Telephone 800-929-2553 or 717-248-0131; Fax 800-929-1274, or approved equal.

2.2 ROLLING DOORS

2.2.1 Trade Reference: 620 Series Stormtite Service Doors by Overhead Door Corporation.

2.2.2 Curtain: Interlocking roll-formed slats as specified following. Endlocks shall be attached to each end of alternate slats to prevent lateral movement.

2.2.2.1 Flat profile type F-2651 for doors up to 40’0” wide. The front slat shall be fabricated of 22 gauge galvanized steel. The back slat shall be 24 gauge galvanized steel.

2.2.2.2 Slat cavity shall be filled with CFC-free foamed-in-place, polyurethane insulation.

2.2.3 Finish:

2.2.3.1 Galvanized Steel: Slats and hood shall be galvanized steel in accordance with ASTM A 525 and receive rust inhibitive, roll coating process, including bonderizing, 0.2 mils thick baked-on prime paint, and 0.6 mils thick backed-on powder coated topcoat. Non-galvanized exposed ferrous surfaces shall receive one coat of rust inhibitive primer.

2.2.3.2 Stainless Steel: Slats and hood shall be stainless steel with 2B mill finish.

2.2.3.3 Aluminum: Slats and hood shall be aluminum with clear anodized finish.

2.2.4 Color: Powder coating finish in color as selected by Architect from manufacturer’s standard colors.

2.2.5 Windload Design: 20 PSF.

2.2.6 Weatherseals: Vinyl bottom seal, exterior guide internal hood seals and lintel seals.

2.2.7 Bottom Bar: Two prime painted steel galvanized steel angles, minimum thickness 1/8” bolted back to back to reinforce curtain in the guides.

2.2.8 Guides: Three galvanized structural steel angles with minimum thickness of 3/16”. Guides shall be weatherstripped with a vinyl weather seal at each jamb, on the exterior curtain side.

2.2.9 Brackets: Hot rolled galvanized steel to support counterbalance, curtain and hood.

2.2.10 Counterbalance: Helical torsion spring type designed for standard 50,000 cycle life design. Counterbalance shall be housed in a steel tube or pipe barrel, supporting the curtain with deflection limited to 0.03” per foot of span. Counterbalance shall be adjustable by means of an adjusting tension wheel.

2.2.11 Hood: Galvanized steel, 24 gauge aluminum hood with intermediate supports as required. Provide with internal hood baffle weatherseal.

2.2.12 Manual Operation: Chain hoist.

2.2.13 Electric Motor Operation: Provide UL listed electric operator, size as recommended by manufacturer to move door in either direction at not less than 2/3 foot nor more than 1 foot per second.

2.2.13.1 Sensing Edge Protection: Electric sensing edge.

2.2.13.2 Operator Controls: Push-button and key operated control stations with open, close, and stop buttons for surface mounting for interior location.

2.2.13.3 Special Operation: Vehicle detector operation.

2.2.14 Locking: Interior bottom bar slide bolt lock for manually operated doors. Chain keeper locks for chain hoist operation. Interior slide bolt lock for electric operation with interlock switch.

2.2.15 Wall Mounting Condition: Face of wall mounting.

3.0 EXECUTION

3.1 PREPARATION

3.1.1 Take field dimension and examine conditions of substrates, supports, and other conditions under which this work is to be performed. Do not proceed with work until unsatisfactory conditions are corrected.

3.2 INSTALLATION

3.2.1 Strictly comply with manufacturer's installation instructions and recommendations. Coordinate installation with adjacent work to ensure proper clearances and allow for maintenance.

3.2.2 Instruct Owner's personnel in proper operating procedures and maintenance schedule.

3.3 ADJUSTING AND CLEANING

3.3.1 Test rolling doors for proper operation and adjust as necessary to provide proper operation without binding or distortion.

3.3.2 Touch-up damaged coatings and finishes and repair minor damage. Clean exposed surfaces using non-abrasive materials and methods recommended by manufacturer of material or product being cleaned.

SECTION 08 71 00 - DOOR HARDWARE – ADDENDUM NO. 2

PART 1 - GENERAL

1.1 RELATED DOCUMENTS

A. Drawings and general provisions of the Contract, including General and Supplementary Conditions and Division 1 Specification Sections, apply to this Section.

1. Section 01 21 00 Allowances

1.2 SUMMARY

A. This Section includes commercial door hardware for the following:

1. Swinging doors.
2. Sliding doors.
3. Other doors to the extent indicated.

B. Door hardware includes, but is not necessarily limited to, the following:

1. Mechanical door hardware.
2. Electromechanical door hardware.
3. Automatic operators.
4. Cylinders specified for doors in other sections.

C. Related Sections:

1. Division 08 Section “Hollow Metal Doors and Frames”.
2. Division 08 Section “Flush Wood Doors”.
3. Division 08 Section “Aluminum-Framed Entrances and Storefronts”.

D. Codes and References: Comply with the version year adopted by the Authority Having Jurisdiction.

1. ANSI A117.1 - Accessible and Usable Buildings and Facilities.
2. ANSI/SDI A250.13 - Testing and Rating of Severe Windstorm Resistant Components for Swing Door Assemblies.
3. ASTM E1886 - Test Method for Performance of Exterior Windows, Curtain Walls, Doors and Shutters Impacted by Missiles and Exposed to Cyclic Pressure Differentials.
4. ASTM E330 - Standard Test Method for Structural Performance of Exterior Windows, Curtain Walls, and Doors by Uniform Static Air Pressure difference.
5. ASTM E1996 - Standard specification for performance of exterior windows, curtain walls, doors and storm shutters impacted by Windborne Debris in Hurricanes.
6. ICC/IBC - International Building Code.
7. NFPA 70 - National Electrical Code.

8. NFPA 80 - Fire Doors and Windows.
9. NFPA 101 - Life Safety Code.
10. NFPA 105 - Installation of Smoke Door Assemblies.
11. UL/ULC and CSA C22.2 - Standards for Automatic Door Operators Used on Fire and Smoke Barrier Doors and Systems of Doors.
12. TAS-201-94 - Impact Test Procedures.
13. TAS-202-94 - Criteria for Testing Impact and Non-Impact Resistant Building Envelope Components using Uniform Static Air Pressure.
14. TAS-203-94 - Criteria for Testing Products Subject to Cyclic Wind Pressure Loading.
15. State Building Codes, Local Amendments.

E. Standards: All hardware specified herein shall comply with the following industry standards as applicable. Any undated reference to a standard shall be interpreted as referring to the latest edition of that standard:

1. ANSI/BHMA Certified Product Standards - A156 Series.
2. UL10C - Positive Pressure Fire Tests of Door Assemblies.
3. ANSI/UL 294 - Access Control System Units.
4. UL 305 - Panic Hardware.
5. ANSI/UL 437- Key Locks.

1.3 SUBMITTALS

A. Product Data: Manufacturer's product data sheets including installation details, material descriptions, dimensions of individual components and profiles, operational descriptions and finishes.

B. Door Hardware Schedule: Prepared by or under the supervision of supplier, detailing, fabrication and assembly of door hardware, as well as procedures and diagrams. Coordinate the final Door Hardware Schedule with doors, frames, and related work to ensure proper size, thickness, hand, function, and finish of door hardware.

1. Format: Comply with scheduling sequence and vertical format in DHI's "Sequence and Format for the Hardware Schedule."

2. Organization: Organize the Door Hardware Schedule by door number or opening, coordinated with the Door Schedule on the Drawings.

3. Content: Include the following information:

a. Type, style, function, size, label, hand, and finish of each door hardware item.
b. Manufacturer of each item.
c. Fastenings and other pertinent information.
d. Location of door hardware set, cross-referenced to Drawings, both on floor plans and in door and frame schedule.
e. Explanation of abbreviations, symbols, and codes contained in schedule.
f. Mounting locations for door hardware.
g. Door and frame sizes and materials.
h. Warranty information for each product.

4. Submittal Sequence: Submit the final Door Hardware Schedule at earliest possible date, particularly where approval of the Door Hardware Schedule must precede fabrication of other work that is critical in the Project construction schedule. Include Product Data, Samples, Shop Drawings of other work affected by door hardware, and other information essential to the coordinated review of the Door Hardware Schedule.

C. Shop Drawings: Details of electrified access control hardware indicating the following:

1. Wiring Diagrams: Upon receipt of approved schedules, submit detailed system wiring diagrams for power, signaling, monitoring, communication, and control of the access control system electrified hardware. Differentiate between manufacturer-installed and field-installed wiring. Include the following:

a. Elevation diagram of each unique access controlled opening showing location and interconnection of major system components with respect to their placement in the respective door openings.
b. Complete (risers, point-to-point) access control system block wiring diagrams.
c. Wiring instructions for each electronic component scheduled herein.

2. Electrical Coordination: Coordinate with related sections the voltages and wiring details required at electrically controlled and operated hardware openings.

D. Proof of Qualification: Provide copy of manufacturer(s) Factory Trained Installer documentation indicating proof of status as a qualified installer of tornado or hurricane storm shelter assemblies.

E. Keying Schedule: After a keying meeting with the owner has taken place prepare a separate keying schedule detailing final instructions. Submit the keying schedule in electronic format. Include keying system explanation, door numbers, key set symbols, hardware set numbers and special instructions. Owner must approve submitted keying schedule prior to the ordering of permanent cylinders/cores.

F. Informational Submittals:

1. Hurricane Resistant Openings: Exterior hurricane opening assemblies to be tested according to ASTM E330, ASTM E1886, ASTM E1996, TAS 201, TAS 202, TAS 203 standards, and certified by a qualified independent third party agency acceptable to authority having jurisdiction, with labeling indicating compliance with the design pressure and debris impact resistance level requirements specified for the Project.
2. Product Test Reports: Indicating compliance with cycle testing requirements, based on evaluation of comprehensive tests performed by manufacturer and witnessed by a qualified independent testing agency.

1.4 CLOSEOUT SUBMITTALS

A. Operating and Maintenance Manuals: Provide manufacturers operating and maintenance manuals for each item comprising the complete door hardware installation in quantity as required in Division 01, Closeout Procedures.

B. Project Record Documents: Provide record documentation of as-built door hardware sets in digital format (.pdf, .docx, .xlsx, .csv) and as required in Division 01, Project Record Documents.

1.5 QUALITY ASSURANCE

A. Manufacturers Qualifications: Engage qualified manufacturers with a minimum 5 years of documented experience in producing hardware and equipment similar to that indicated for this Project and that have a proven record of successful in-service performance.

B. Certified Products: Where specified, products must maintain a current listing in the Builders Hardware Manufacturers Association (BHMA) Certified Products Directory (CPD).

C. Installer Qualifications: A minimum 3 years documented experience installing both standard and electrified door hardware similar in material, design, and extent to that indicated for this Project and whose work has resulted in construction with a record of successful in-service performance.

1. All installers shall be full time employees of the supplier (or subcontractors of the supplier) of the hardware and trained and approved by lock manufacturer. Installer shall have minimum 3 years' experience in installation of similar hardware that is required for this Project.

2. The General Contractor or other subcontractors may not install hardware. If any hardware is installed, it will be considered non-conforming.

D. Door Hardware Supplier Qualifications: Experienced commercial door hardware distributors with a minimum 5 years documented experience supplying both mechanical and electromechanical hardware installations comparable in material, design, and extent to that indicated for this Project. Supplier recognized as a factory direct distributor by the manufacturers of the primary materials with a warehousing facility in Project's vicinity. Supplier to have on staff a certified Architectural Hardware Consultant (AHC) available during the course of the Work to consult with Contractor, Architect, and Owner concerning both standard and electromechanical door hardware and keying.

E. Storm Shelter Impact Protective Assembly Installer Qualifications: Installers are to be factory trained for shop and field installation prior to project bid, and are responsible for commissioning, servicing, and warranting the installed equipment specified for the project. A pre-installation site inspection of the frame and floor conditions shall be conducted by the factory trained installer prior to any Storm Shelter Impact Protective assembly hardware applied to the opening.

F. Source Limitations: Obtain each type and variety of door hardware specified in this section from a single source unless otherwise indicated.

1. Electrified modifications or enhancements made to a source manufacturer's product line by a secondary or third party source will not be accepted.
2. Provide electromechanical door hardware from the same manufacturer as mechanical door hardware, unless otherwise indicated.

G. Hurricane Resistant Exterior Openings: Provide exterior door hardware as complete and tested assemblies, or component assemblies, including approved doors and frames specified under Section 081113 "Hollow Metal Doors and Frames", to meet the design pressures, debris impact resistance, and glass and glazing requirements applicable to the Project.

1. Test units according to ASTM E330, ASTM E1886, ASTM E1996, TAS 201, TAS 202, and TAS 203 standards, certified by a qualified independent third party listing agency acceptable to authority having jurisdiction, and bearing a third party certification agency permanent label indicting windstorm approved product.

H. Storm Shelter Openings: Provide complete door systems for hurricane or tornado resistant storm shelters and other areas of refuge complying and tested according to ICC 500 (2014/2020), ICC/NSSA Standard for the Design and Construction of Storm Shelters.

I. Each unit to bear third party permanent label indicating compliance with the referenced testing standards.

J. Keying Conference: Conduct conference to comply with requirements in Division 01 Section "Project Meetings." Keying conference to incorporate the following criteria into the final keying schedule document:

1. Function of building, purpose of each area and degree of security required.
2. Plans for existing and future key system expansion.
3. Requirements for key control storage and software.
4. Installation of permanent keys, cylinder cores and software.
5. Address and requirements for delivery of keys.

K. Pre-Submittal Conference: Conduct coordination conference in compliance with requirements in Division 01 Section "Project Meetings" with attendance by representatives of Supplier(s), Installer(s), and Contractor(s) to review proper methods and the procedures for receiving, handling, and installing door hardware.

1. Prior to installation of door hardware, conduct a project specific training meeting to instruct the installing contractors' personnel on the proper installation and adjustment of their respective products. Product training to be attended by installers of door hardware (including electromechanical hardware) for aluminum, hollow metal and wood doors. Training will include the use of installation manuals, hardware schedules, templates and physical product samples as required.
2. Inspect and discuss electrical roughing-in, power supply connections, and other preparatory work performed by other trades.
3. Review sequence of operation narratives for each unique access controlled opening.
4. Review and finalize construction schedule and verify availability of materials.
5. Review the required inspecting, testing, commissioning, and demonstration procedures

L. At completion of installation, provide written documentation that components were applied according to manufacturer's instructions and recommendations and according to approved schedule.

1.6 DELIVERY, STORAGE AND HANDLING

A. Inventory door hardware on receipt and provide secure lock-up and shelving for door hardware delivered to Project site. Do not store electronic access control hardware, software or accessories at Project site without prior authorization.

B. Tag each item or package separately with identification related to the final Door Hardware Schedule, and include basic installation instructions with each item or package.

C. Deliver, as applicable, permanent keys, cylinders, cores, access control credentials, software and related accessories directly to Owner via registered mail or overnight package service. Instructions for delivery to the Owner shall be established at the "Keying Conference".

1.7 COORDINATION

A. Templates: Obtain and distribute to the parties involved templates for doors, frames, and other work specified to be factory prepared for installing standard and electrified hardware. Check Shop Drawings of other work to confirm that adequate provisions are made for locating and installing hardware to comply with indicated requirements.

B. Door and Frame Preparation: Doors and corresponding frames are to be prepared, reinforced and pre-wired (if applicable) to receive the installation of the specified electrified, monitoring, signaling and access control system hardware without additional in-field modifications.

1.8 RESPONSIBILITY MATRIX

A. Supply of hardware: Section 08 71 00 Hardware Supplier

B. Hardware templates: Section 08 71 00 Hardware Supplier

C. Door hardware prep (factory)

1. Hollow Metal Doors and Frames: Section 08 11 13 Hollow Metal Supplier

2. Wood Door: Section 08 14 13 Wood Door Supplier

3. Aluminum Entrances and Storefronts: Section 08 41 13 Storefront Contractor

D. Wiring to door: Division 26 – Electrical (Including conduit, sleeves, and junction boxes to door/frame).

E. Low-voltage connections: Division 28 – Low Voltage Contractor (Including, door position switches, request-to-exit devices, electrified locking hardware terminations, and final connections)

F. Division 26 provides raceways and line-voltage power only. Division 28 provides all low-voltage cabling, terminations, and connections to access control devices at doors.

1.9 BUILD AMERICA, BUY AMERICA (BABA)

A. This Project is subject to the Build America, Buy America Act (BABA), 41 U.S.C. §§ 8301–8305.

B. Domestic Manufacturing Requirements:

1. Iron and steel: All manufacturing processes, from melting through coating, shall occur in the United States.

2. Manufactured products: All manufactured products permanently incorporated into the project must be manufactured in the United States.

3. Construction materials: All manufacturing processes for construction materials shall occur in the United States.

C. Compliance Documentation:

1. Provide manufacturer's certification of domestic origin for all products.

2. Provide BABA compliance documentation with each product submittal. Refer to Section 01 33 00 Submittals.

3. Failure to provide BABA documentation will be grounds for rejection.

D. Waivers: **Waivers will not be considered.**

1.10 WARRANTY

A. General Warranty: Reference Division 01, General Requirements. Special warranties specified in this Article shall not deprive Owner of other rights Owner may have under other provisions of the Contract Documents and shall be in addition to, and run concurrent with, other warranties made by Contractor under requirements of the Contract Documents.

B. Warranty Period: Written warranty, executed by manufacturer(s), agreeing to repair or replace components of standard and electrified door hardware that fails in materials or workmanship within specified warranty period after final acceptance by the Owner. Failures include, but are not limited to, the following:

1. Structural failures including excessive deflection, cracking, or breakage.
2. Faulty operation of the hardware.
3. Deterioration of metals, metal finishes, and other materials beyond normal weathering.
4. Electrical component defects and failures within the systems operation.

C. Warranty Period: Unless otherwise indicated, warranty shall be one year from date of Substantial Completion.

1.11 MAINTENANCE SERVICE

A. Maintenance Tools and Instructions: Furnish a complete set of specialized tools and maintenance instructions as needed for Owner's continued adjustment, maintenance, and removal and replacement of door hardware.

B. Storm Shelter Openings: Furnish a complete set of operational and maintenance instructions as needed for Owner's continued adjustment, maintenance, and repairs of door hardware as required by ICC 500 (2020), ICC/NSSA Standard for the Design and Construction of Storm Shelters.

PART 2 - PRODUCTS

2.1 MATERIALS

A. Hardware shall not have any visible manufacturer names on exposed materials, except cylinders, when the door is in a closed position.

2.2 BUTT HINGES

A. Hinges: ANSI/BHMA A156.1 butt hinges with number of hinge knuckles and other options as required for a complete and code compliant installation.

1. Quantity: Provide the following hinge quantity:

a. Two Hinges: For doors with heights up to 60 inches.
b. Three Hinges: For doors with heights 61 to 90 inches.
c. Four Hinges: For doors with heights 91 to 120 inches.
d. For doors with heights more than 120 inches, provide 4 hinges, plus 1 hinge for every 30 inches of door height greater than 120 inches.

2. Hinge Size: Provide the following, unless otherwise indicated, with hinge widths sized for door thickness and clearances required:

a. Widths up to 3’0”: 4-1/2” standard or heavy weight as specified.
b. Sizes from 3’1” to 4’0”: 5” standard or heavy weight as specified.

3. Hinge Weight and Base Material: Unless otherwise indicated, provide the following:

a. Exterior Doors: Heavy weight, non-ferrous, ball bearing or oil impregnated bearing hinges.

b. Interior Doors: Standard weight, steel, ball bearing or oil impregnated bearing hinges.

4. Hinge Options: Comply with the following:

a. Non-removable Pins: With the exception of electric through wire hinges, provide set screw in hinge barrel that, when tightened into a

groove in hinge pin, prevents removal of pin while door is closed; for all out-swinging lockable doors.

5. Manufacturers:

a. McKinney (MK) - TA/T4A Series, 5-knuckle.

B. Hinges at Storm Shelter Assemblies: At a minimum, provide heavy weight hinges with stainless steel screws used in accordance with and specified as part of a Severe Storm Shelter Opening meeting ICC 500 and FEMA 361.

2.3 CONTINUOUS HINGES

A. Continuous Geared Hinges: ANSI/BHMA A156.26 Grade 1-600 continuous geared hinge. with minimum 0.120-inch thick extruded 6063-T6 aluminum alloy hinge leaves and a minimum overall width of 4 inches. Hinges are non-handed, reversible and fabricated to template screw locations. Factory trim hinges to suit door height and prepare for electrical cut-outs.

1. Manufacturers:.

a. Pemko (PE).

B. Pin and Barrel Continuous Hinges: ANSI/BHMA A156.26 Grade 1-600 pin and barrel continuous hinges with minimum 14 gauge Type 304 stainless steel hinge leaves, concealed stainless pin, and twin self-lubricated nylon bearings at each knuckle separation. Factory trim hinges to suit door height and prepare for electrical cut-outs.

1. Manufacturers:

a. Markar Products; ASSA ABLOY Architectural Door Accessories (MR).
b. Pemko (PE).

2.4 POWER TRANSFER DEVICES

A. Concealed Quick Connect Electric Power Transfers: Provide concealed wiring pathway housing mortised into the door and frame for low voltage electrified door hardware. Furnish with Molex™ standardized plug connectors and sufficient number of concealed wires (up to 12) to accommodate the electrified functions. Connectors plug directly to through-door wiring harnesses for connection to electric locking devices and power supplies. Wire nut connections are not acceptable.

1. Manufacturers:

a. Pemko (PE) - EL-CEPT Series.
b. Securitron (SU) - EL-CEPT Series.

B. Electric Door Wire Harnesses: Provide electric/data transfer wiring harnesses with standardized plug connectors to accommodate up to twelve (12) wires. Connectors plug directly to through-door wiring harnesses for connection to electric locking devices and power supplies. Provide sufficient number and type of concealed wires to accommodate electric function of specified hardware. Provide a connector for through-door electronic

locking devices and from hinge to junction box above the opening. Wire nut connections are not acceptable. Determine the length required for each electrified hardware component for the door type, size and construction, minimum of two per electrified opening.

1. Provide one each of the following tools as part of the base bid contract:

    a. McKinney (MK) - Electrical Connecting Kit: QC-R001.
    b. McKinney (MK) - Connector Hand Tool: QC-R003.

2. Manufacturers:

    a. McKinney (MK) - QC-C Series.

2.5 DOOR OPERATING TRIM

A. Flush Bolts and Surface Bolts: Provide products conforming to ANSI/BHMA A156.3 and A156.16, Grade 1.

1. Flush bolts to be furnished with top rod of sufficient length to allow bolt retraction device location approximately six feet from the floor.
2. Furnish dust proof strikes for bottom bolts.
3. Surface bolts to be minimum 8” in length and U.L. listed for labeled fire doors and U.L. listed for windstorm components where applicable.
4. Provide related accessories (mounting brackets, strikes, coordinators, etc.) as required for appropriate installation and operation.
5. Manufacturers:

    a. Rockwood (RO).

B. Coordinators: ANSI/BHMA A156.3 door coordinators consisting of active-leaf, hold-open lever and inactive-leaf release trigger. Model as required for a complete and code-compliant installation.

1. Manufacturers:

    a. Rockwood (RO).

2.6 DOOR OPERATING TRIM

A. Door Push Plates and Pulls: ANSI/BHMA A156.6 door pushes and pull units of type and design as required for a complete and code-compliant installation.

B. Coordinate and provide proper width and height as required where conflicting hardware dictates.

1. Push/Pull Plates: Minimum .050 inch thick, size as as required for a complete and code-compliant installation, with beveled edges, secured with exposed screws unless otherwise indicated.
2. Door Pull and Push Bar Design: Size, shape, and material as required for a complete and code-compliant installation. Minimum clearance of 2 1/2-inches from face of door unless otherwise indicated.

3. Offset Pull Design: Size, shape, and material as required for a complete and code compliant installation. Minimum clearance of 2 1/2-inches from face of door and offset of 90 degrees unless otherwise indicated.
4. Pulls shall be provided with a 10” clearance from the finished floor on the push side to accommodate wheelchair accessibility.
5. Fasteners: Provide manufacturer's designated fastener type as required for a complete and code compliant installation. When through-bolt fasteners are in the same location as a push plate, countersink the fasteners flush with the door face allowing the push plate to sit flat against the door.
6. Manufacturers:

    a. Rockwood (RO).

2.7 CYLINDERS AND KEYING

A. General: Cylinder manufacturer to have minimum (10) years experience designing secured master key systems and have on record a published security keying system policy.

B. Cylinder Types: Original manufacturer cylinders able to supply the following cylinder formats and types:

1. Threaded mortise cylinders with rings and cams to suit hardware application.
2. Rim cylinders with back plate, flat-type vertical or horizontal tailpiece, and raised trim ring.
3. Bored or cylindrical lock cylinders with tailpieces as required to suit locks.
4. Tubular deadlocks and other auxiliary locks.
5. Mortise and rim cylinder collars to be solid and recessed to allow the cylinder face to be flush and be free spinning with matching finishes.
6. Keyway: Manufacturer’s Standard.

C. Large Format Interchangeable Cores: Provide removable cores (LFIC) as specified, core insert, removable by use of a special key, and for use with only the core manufacturer's cylinder and door hardware.

D. Security Cylinders: ANSI/BHMA A156.5, Grade 1 Certified Products Directory (CPD) listed security cylinders and keys able to be used together under the same facility master or grandmaster key system. Cylinders to be factory keyed.

1. New security key systems shall not be established with products that have an expired patent. Expired systems shall only be specified and supplied to support existing systems.
2. Manufacturers:

    a. Corbin Russwin (RU) - Access 3 AS.
    b. Sargent (SA) - Degree DG2.
    c. No Substitution.

E. Patented Cylinders: ANSI/BHMA A156.5, Grade 1 Certified Products Directory (CPD) listed cylinders employing a utility patented and restricted keyway requiring the use of a patented key. Cylinders are to be protected from unauthorized manufacture and

distribution by manufacturer's United States patents. Cylinders are to be factory keyed with owner having the ability for on-site original key cutting.

1. Patented key systems shall not be established with products that have an expired patent. Expired systems shall only be specified and supplied to support existing systems.
2. Manufacturers:

    a. Corbin Russwin (RU) - Access 3 AP.
    b. Sargent (SA) - Degree DG1.
    c. No Substitution.

F. Keying System: Each type of lock and cylinders to be factory keyed.

1. Supplier shall conduct a "Keying Conference" to define and document keying system instructions and requirements.
2. Furnish factory cut, nickel-silver large bow permanently inscribed with a visual key control number as directed by Owner.
3. New System: Key locks to a new key system as directed by the Owner.

G. Key Quantity: Provide the following minimum number of keys:

1. Change Keys per Cylinder: Two (2)
2. Master Keys (per Master Key Level/Group): Five (5).
3. Construction Keys (where required): Ten (10).

H. Construction Keying: Provide construction master keyed cylinders.

I. Key Registration List (Bitting List):

1. Provide keying transcript list to Owner's representative in the proper format for importing into key control software.
2. Provide transcript list in writing or electronic file as directed by the Owner.

2.8 KEY CONTROL

A. Key Control Cabinet: Provide a key control system including envelopes, labels, and tags with self-locking key clips, receipt forms, 3-way visible card index, temporary markers, permanent markers, and standard metal cabinet. Key control cabinet shall have expansion capacity of 150% of the number of locks required for the project.

1. Manufacturers:

    a. Lund Equipment (LU).
    b. MMF Industries (MM).
    c. Telkee (TK).

2.9 MORTISE LOCKS AND LATCHING DEVICES

A. Mortise Locksets, Grade 1 (Heavy Duty): Provide ANSI/BHMA A156.13, Series 1000, Operational Grade 1 Certified Products Directory (CPD) listed mortise locksets. Listed manufacturers shall meet all functions and features as specified herein.

1. Manufacturers:

    a. ASSA ABLOY ACCENTRA (YA) - 8800FL Series.
    b. Corbin Russwin Hardware (RU) - ML2000 Series.
    c. Sargent Manufacturing (SA) - 8200 Series.

2.10 LOCK AND LATCH STRIKES

A. Strikes: Provide manufacturer's standard strike with strike box for each latch or lock bolt, with curved lip extended to protect frame, finished to match adjacent door hardware, unless otherwise indicated, and as follows:

1. Flat-Lip Strikes: For locks with three-piece antifriction latchbolts, as recommended by manufacturer.
2. Extra-Long-Lip Strikes: For locks used on frames with applied wood casing trim.
3. Aluminum-Frame Strike Box: Provide manufacturer's special strike box fabricated for aluminum framing.
4. Double-lipped strikes: For locks at double acting doors. Furnish with retractable stop for rescue hardware applications.

B. Standards: Comply with the following:

1. Strikes for Mortise Locks and Latches: BHMA A156.13.
2. Strikes for Bored Locks and Latches: BHMA A156.2.
3. Strikes for Auxiliary Deadlocks: BHMA A156.36.
4. Dustproof Strikes: BHMA A156.16.

2.11 ELECTRIC STRIKES

A. Standard Electric Strikes: Electric strikes conforming to ANSI/BHMA A156.31, Grade 1, for use on non-rated or fire rated openings. Strikes shall be of stainless steel construction tested to a minimum of 1500 pounds of static strength and 70 foot-pounds of dynamic strength with a minimum endurance of 1 million operating cycles. Provide strikes with 12 or 24 VDC capability, fail-secure unless otherwise specified. Where specified provide latchbolt and latchbolt strike monitoring indicating both the position of the latchbolt and locked condition of the strike.

1. Manufacturers:

    a. HES (HS) - 1500/1600 Series.

B. Provide electric strikes with in-line power controller and surge suppressor by the same manufacturer as the strike with the combined products having a five year warranty.

2.12 CONVENTIONAL EXIT DEVICES

A. General Requirements: All exit devices specified herein shall meet or exceed the following criteria:

1. Exit devices shall have a five-year warranty.

2. At doors not requiring a fire rating, provide devices complying with NFPA 101 and listed and labeled for "Panic Hardware" according to UL305. Provide proper fasteners as required by manufacturer including sex nuts and bolts at openings.
3. Where exit devices are required on fire rated doors, provide devices complying with NFPA 80 and with UL labeling indicating "Fire Exit Hardware". Provide devices with the proper fasteners for installation as tested and listed by UL. Consult manufacturer's catalog and template book for specific requirements.
4. Except on fire rated doors, provide exit devices with hex key dogging device to hold the pushbar and latch in a retracted position. Provide optional keyed cylinder dogging on devices.
5. Devices must fit flat against the door face with no gap that permits unauthorized dogging of the push bar. The addition of filler strips is required in any case where the door light extends behind the device as in a full glass configuration.
6. Lever Operating Trim: Where exit devices require lever trim, furnish manufacturer's heavy duty escutcheon trim with threaded studs for thru-bolts.

    a. Lock Trim Design: Provide finishes and designs to match that of the specified locksets.
    b. Where function of exit device requires a cylinder, provide a cylinder (Rim or Mortise).

7. Vertical Rod Exit Devices: Where surface or concealed vertical rod exit devices are used at interior openings, provide as less bottom rod (LBR) unless otherwise indicated. Provide dust proof strikes where thermal pins are required to project into the floor.
8. Narrow Stile Applications: At doors constructed with narrow stiles, provide devices designed for maximum 2" wide stiles.
9. Dummy Push Bar: Nonfunctioning push bar matching functional push bar.
10. Rail Sizing: Provide exit device rails factory sized for proper door width application.
11. Through Bolt Installation: For exit devices and trim.
12. Hurricane and Storm Shelter Compliance: Devices to be U.L. listed for windstorm assemblies where applicable. Provide the appropriate hurricane or storm shelter products that have been independently third party tested, certified, and labeled to meet state and local windstorm building codes applicable to project.

B. Conventional Push Rail Exit Devices (Heavy Duty): ANSI/BHMA A156.3, Grade 1 Certified Products Directory (CPD) listed exit devices. Listed manufacturers shall meet all functions and features as specified herein.

1. Provide exit devices with functions and features as follows:

    a. Where required by code, provide knurling or abrasive coating on all levers leading to hazardous areas.
    b. Meets UL and CUL Standard 10C Positive Pressure, Fire Test of Door Assemblies with levers that meet A117.1 Accessibility Code.
    c. No catch points: addition of applied deflectors or other added components are not allowed.
    d. No visible plastic.
    e. Heavy duty end caps with flush and overlapping options made of stainless steel, brass, or bronze with architectural finishes.
    f. Constructed of all stainless steel.
    g. Stainless steel pullman type latch with deadlock feature.

h. Narrow or wide style exterior trim.
i. Center case adjustability on concealed vertical rod exit devices; single operation with hex key individually adjusts top or bottom latches. No retainer screws or clips required to maintain adjustment.
j. Ten-year limited warranty for mechanical features.

2. Manufacturers:

a. Corbin Russwin Hardware (RU) - PED4000 / PED5000 Series.
b. Sargent Manufacturing (SA) - PE80 Series.

C. Conventional Push Rail Exit Devices (Heavy Duty): ANSI/BHMA A156.3, Grade 1 Certified Products Directory (CPD) listed exit devices. Listed manufacturers shall meet all functions and features as specified herein.

1. Electromechanical exit devices shall have the following functions and features:

a. Universal Molex plug-in connectors that have standardized color-coded wiring and are field configurable in fail safe or fail secure and operate from 12vdc to 24vdc regulated.
b. EcoFlex or equivalent technology that reduces energy consumption up to 92% as certified by GreenCircle.
c. Options to be available for request-to-exit or enter signaling, latchbolt and touchbar monitoring.
d. Field configurable electrified trim to fail-safe or fail-secure that operates from 12-24VDC.
e. Five-year limited warranty for electromechanical features.

2. Manufacturers:

a. Corbin Russwin Hardware (RU) - ED4000 / ED5000 Series.
b. Sargent Manufacturing (SA) - 80 Series.

D. Steel Removable Mullions: ANSI/BHMA A156.3 steel removable mullions with options for fire rating, locking, through-wire electrification and hurricane compliance as specified.

1. Provide mullions with functions and features as follows:

a. At openings designed for severe wind load conditions due to hurricanes or tornadoes, provide manufacturer's certified mullion and accessories to meet applicable state and local windstorm codes.
b. Provide keyed removable feature.
c. Provide stabilizers and mounting brackets as required.

2. Manufacturers:

a. Same as exit device manufacturer.

2.13 SURFACE DOOR CLOSERS

A. All door closers specified herein shall meet or exceed the following criteria:

1. General: Door closers to be from one manufacturer, matching in design and style, with the same type door preparations and templates regardless of application or spring size. Closers to be non-handed with full sized covers.
2. Standards: Closers to comply with UL-10C for Positive Pressure Fire Test and be U.L. listed for use of fire rated doors.
3. Size of Units: Comply with manufacturer's written recommendations for sizing of door closers depending on size of door, exposure to weather, and anticipated frequency of use. Where closers are indicated for doors required to be accessible to the Americans with Disabilities Act, provide units complying with ANSI ICC/A117.1.
4. Closer Arms: Provide heavy duty, forged steel closer arms.
5. Closers shall not be installed on exterior or corridor side of doors; where possible install closers on door for optimum aesthetics.
6. Closer Accessories: Provide door closer accessories including custom templates, special mounting brackets, spacers and drop plates as required for proper installation. Provide through-bolt and security type fasteners.

B. Door Closers, Surface Mounted (Large Body Cast Iron): ANSI/BHMA A156.4, Grade 1 Certified Products Directory (CPD) listed surface mounted, heavy duty door closers with complete spring power adjustment, sizes 1 thru 6; and fully operational adjustable according to door size, frequency of use, and opening force. Closers to be rack and pinion type, one piece cast iron body construction, with adjustable backcheck and separate non-critical valves for closing sweep and latch speed control.

1. Large body cast iron surface mounted door closers shall have a 30-year warranty.
2. Manufacturers:

   a. Corbin Russwin Hardware (RU) - DC8000 Series.
   b. Norton Rixson (NO) - 9500 Series.
   c. Sargent Manufacturing (SA) - 281 Series.

2.14 ELECTROHYDRAULIC DOOR OPERATORS

A. Electrohydraulic Door Operators (High Traffic): Provide ANSI/BHMA A156.19 Certified Products Directory (CPD) listed low energy operators that meet ANSI/BHMA A156.4 requirements and are UL listed for use on fire rated doors and UL10C certified that comply with requirements for the Americans with Disabilities Act (ADA). Operators shall be verified by GreenCircle to offer energy savings of 19% when compared to similar products to accommodate openings up 250 pounds and 48” wide. Provide accessories such as custom templates, special mounting brackets, spacers and drop plates as needed for proper installation. Operators shall accommodate openings up to 200 pounds and 48” wide. Listed manufacturers shall meet all functions and features as specified herein.

1. Provide operators with features as follows:

   a. Non-handed with push and pull side mounting.
   b. Operates as mechanical surface closer during close cycles, when door is opened manually or if power is off.
   c. Activation by push button, hands-free or radio frequency devices.
   d. On board electronics to collect usage and cycle count data to facilitate preventative maintenance/diagnostics.

e. Two-year limited warranty.
f. Wi-Fi interface where the operator is a secure, password protected WiFi hot spot with no connection to building's IT required.
   1) Simple setup with no app required.
   2) View status and make adjustments without removing the cover.
   3) Built-in logic to support single use restroom applications with no external relay boards, logic modules, position switches required.
g. Mounting backplate to simplify and speed up installation.

2. Operators shall have the following functionality:

   a. Adjustable Hold Open: Amount of time a door will stay in the full open position after an activation.
   b. Blow Open for Smoke Ventilation: Door opens when signal is received from alarm system allowing air or smoke to flow through opening. Door will stay open until signal from alarm system is stopped.
   c. Infinite Hold Open: Door will hold open at set position until power is turned off.
   d. Obstruction Detection: Door closes if it hits an obstruction while opening; door will reverse to open position if it hits an obstruction while closing. Door will stop once it hits an obstruction and will rest against the obstruction until removed.
   e. Open Delay: Delays operator opening for locking hardware.
   f. Overload Safety Shut-Off: After two minutes of receiving a door activation signal, inverter times out and door closes to prevent motor/inverter damage.
   g. Presence Detector Input: Input for external sensor to detect presence at door open or close position only.
   h. Push & Go: As the door is manually opened, the operator "senses" movement and opens door to the full-open position.
   i. Selector Mode Switch: Off disables the signal inputs unless Blow Open is activated, on activates the signal inputs, hold open activates the unit (unless Blow Closed is activated) to the hold open position.
   j. Vestibule Delay: When the wall switch is pressed, first door in vestibule will open. Second door will open once vestibule door delay has expired. Delay is adjustable.

3. Manufacturers:

   a. Norton Rixson (NO) - 6000 Series.

2.15 ARCHITECTURAL TRIM AND ACCESSORIES

A. Door Protective Trim:

1. General: Door protective trim units to be of type and design as specified below.
2. Size: Fabricate protection plates (kick, armor, or mop) not more than 2" less than door width (LDW) on stop side of single doors and 1" LDW on stop side of pairs of doors, and not more than 1" less than door width on pull side. Coordinate and provide proper width and height as required where conflicting hardware dictates.
3. Where plates are applied to fire rated doors with the top of the plate more than 16" above the bottom of the door, provide plates complying with NFPA 80. Consult

manufacturer's catalog and template book for specific requirements for size and applications.

4. Protection Plates: ANSI/BHMA A156.6 protection plates (kick, armor, or mop), fabricated from the following:

    a. Stainless Steel: 300 grade, 050-inch thick.

5. Options and fasteners: Provide manufacturer's designated fastener type. Provide countersunk screw holes.
6. Manufacturers:

    a. Rockwood (RO).

2.16 DOOR STOPS AND HOLDERS

A. General: Door stops and holders to be of type and design as specified below.

B. Door Stops and Bumpers: ANSI/BHMA A156.16, Grade 1 door stops and wall bumpers. Provide wall bumpers, either convex or concave types with anchorage as indicated, unless floor or other types of door stops are specified. Do not mount floor stops where they will impede traffic. Where floor or wall bumpers are not appropriate, provide overhead type stops and holders.

1. Manufacturers:

    a. Rockwood (RO).

C. Overhead Door Stops and Holders: ANSI/BHMA A156.8, Grade 1 Certified Products Directory (CPD) listed overhead stops and holders to be surface or concealed types. Track, slide, arm and jamb bracket to be constructed of extruded bronze and shock absorber spring of heavy tempered steel. Provide non-handed design with mounting brackets as required for proper operation and function.

1. Manufacturers:

    a. Norton Rixson (RF).
    b. Rockwood (RO).
    c. Sargent Manufacturing (SA).

2.17 ARCHITECTURAL SEALS

A. General: Thresholds, weatherstripping, and gasket seals to be of type and design as specified below. Provide continuous weatherstrip gasketing on exterior doors and provide smoke, light, or sound gasketing on interior doors where indicated. At exterior applications provide non-corrosive fasteners and elsewhere where indicated.

B. Smoke Labeled Gasketing: Assemblies complying with NFPA 105 that are listed and labeled by a testing and inspecting agency acceptable to authorities having jurisdiction, for smoke control ratings indicated, based on testing according to UL 1784.

1. Provide smoke labeled perimeter gasketing at all smoke labeled openings.

C. Fire Labeled Gasketing: Assemblies complying with NFPA 80 that are listed and labeled by a testing and inspecting agency acceptable to authorities having jurisdiction, for fire ratings indicated, based on testing according to UL-10C.

1. Provide intumescent seals as indicated to meet UL10C Standard for Positive Pressure Fire Tests of Door Assemblies, and NFPA 252, Standard Methods of Fire Tests of Door Assemblies.

D. Sound-Rated Gasketing: Assemblies that are listed and labeled by a testing and inspecting agency, for sound ratings indicated.

E. Replaceable Seal Strips: Provide only those units where resilient or flexible seal strips are easily replaceable and readily available from stocks maintained by manufacturer.

F. Manufacturers:

1. Pemko (PE).

2.18 ELECTRONIC ACCESSORIES

A. Door Position Switches: Door position magnetic reed contact switches specifically designed for use in commercial door applications. On recessed models the contact and magnetic housing snap-lock into a 1" diameter hole. Surface mounted models include wide gap distance design complete with armored flex cabling. Provide SPDT, N/O switches with optional Rare Earth Magnet installation on steel doors with flush top channels.

1. Manufacturers:

a. Securitron (SU) - DPS Series.

B. Intelligent Switching Power Supplies: Provide the least number of power supplies at the appropriate amperage level sufficient to exceed the required total draw for the specified electrified hardware and access control equipment.

1. Power supplies shall meet all functions and features as specified herein.

a. UL listed dual voltage 12 or 24 VDC field selectable continuous output.
b. Dedicated fast charger to prolong battery life with low battery cutoff to protect batteries from deep discharge.
c. Enhanced surge immunity for input/output protection
d. Separate, dedicated battery charging circuit to keep locks cooler.
e. Dual-color LED visual notification to prevent applying incorrect voltages to the power supply.
f. Instant auto-switch to battery on AC loss.
g. Expandable up to 16 outputs in the standard enclosure
h. Integrated fire alarm interface to allow main output shutdown or disconnect on a per output basis when using an R8 output module.
i. Network ready and remotely manage locks and connected devices when using an M8 managed output module on network models.
j. Lifetime replacement, no-fault, no questions asked warranty.

2. Manufacturers:

a. Securitron (SU) - AQL Series.

2.19 FABRICATION

A. Fasteners: Provide door hardware manufactured to comply with published templates generally prepared for machine, wood, and sheet metal screws. Provide screws according to manufacturers recognized installation standards for application intended.

2.20 FINISHES

A. Standard: Designations used indicate hardware finishes complying with ANSI/BHMA A156.18, including coordination with traditional U.S. finishes indicated by certain manufacturers for their products.

B. Provide quality of finish, including thickness of plating or coating (if any), composition, hardness, and other qualities complying with manufacturer's standards, but in no case less than specified by referenced standards for the applicable units of hardware

C. Protect mechanical finishes on exposed surfaces from damage by applying a strippable, temporary protective covering before shipping.

PART 3 - EXECUTION

3.1 EXAMINATION

A. Examine scheduled openings, with Installer present, for compliance with requirements for installation tolerances, labeled fire door assembly construction, wall and floor construction, and other conditions affecting performance.

B. Notify architect of any discrepancies or conflicts between the door schedule, door types, drawings and scheduled hardware. Proceed only after such discrepancies or conflicts have been resolved in writing.

3.2 PREPARATION

A. Hollow Metal Doors and Frames: Comply with ANSI/DHI A115 series.

B. Wood Doors: Comply with ANSI/DHI A115-W series.

3.3 INSTALLATION

A. Install each item of mechanical and electromechanical hardware and access control equipment to comply with manufacturer's written instructions and according to specifications.

1. Installers are to be trained and certified by the manufacturer on the proper installation and adjustment of fire, life safety, and security products including: hanging devices; locking devices; closing devices; and seals.

B. Mounting Heights: Mount door hardware units at heights indicated in following applicable publications, unless specifically indicated or required to comply with governing regulations:

1. Standard Steel Doors and Frames: DHI's "Recommended Locations for Architectural Hardware for Standard Steel Doors and Frames."
2. DHI TDH-007-20: Installation Guide for Doors and Hardware.
3. Where indicated to comply with accessibility requirements, comply with ANSI A117.1 "Accessibility Guidelines for Buildings and Facilities."
4. Provide blocking in drywall partitions where wall stops or other wall mounted hardware is located.

C. Retrofitting: Install door hardware to comply with manufacturer's published templates and written instructions. Where cutting and fitting are required to install door hardware onto or into surfaces that are later to be painted or finished in another way, coordinate removal, storage, and reinstallation of surface protective trim units with finishing work specified in Division 9 Sections. Do not install surface-mounted items until finishes have been completed on substrates involved.

D. Push Plates and Door Pulls: When through-bolt fasteners are in the same location as a push plate, countersink the fasteners flush with the door face allowing the push plate to sit flat against the door.

E. Thresholds: Set thresholds for exterior and acoustical doors in full bed of sealant complying with requirements specified in Division 7 Section "Joint Sealants."

F. Storage: Provide a secure lock up for hardware delivered to the project but not yet installed. Control the handling and installation of hardware items so that the completion of the work will not be delayed by hardware losses before and after installation.

3.4 FIELD QUALITY CONTROL

A. Field Inspection (Punch Report): Produce project punch report for each installed door opening indicating compliance with approved submittals and verification hardware is properly installed, operating and adjusted. Include list of items to be completed and corrected, indicating the reasons or deficiencies causing the Work to be incomplete or rejected.

3.5 ADJUSTING

A. Initial Adjustment: Adjust and check each operating item of door hardware and each door to ensure proper operation or function of every unit. Replace units that cannot be adjusted to operate as intended. Adjust door control devices to compensate for final operation of heating and ventilating equipment and to comply with referenced accessibility requirements.

3.6 CLEANING AND PROTECTION

A. Protect all hardware stored on construction site in a covered and dry place. Protect exposed hardware installed on doors during the construction phase. Install any and all hardware at the latest possible time frame.

B. Clean adjacent surfaces soiled by door hardware installation.

C. Clean operating items as necessary to restore proper finish. Provide final protection and maintain conditions that ensure door hardware is without damage or deterioration at time of owner occupancy.

3.7 DEMONSTRATION

A. Instruct Owner's maintenance personnel to adjust, operate, and maintain mechanical and electromechanical door hardware.

3.8 DOOR HARDWARE SCHEDULE – ALLOWANCE BASED

A. Final door hardware shall be provided under the Door Hardware Allowance specified in Section 01 21 00 – Allowances.

B. The Contractor shall engage a qualified door hardware supplier to:

- Prepare a complete and code-compliant door hardware schedule
- Coordinate with door, frame, and access control requirements
- Ensure compliance with:
  - IBC / NFPA 101 (egress)
  - ADA / ANSI A117.1
  - Fire-rated assemblies
  - Electrified hardware coordination

C. Final hardware selections and schedule shall be submitted for review and approval by Architect and Owner prior to procurement.

END OF SECTION

SECTION 09 66 23 – EPOXY TERRAZZO – ADDENDUM NO. 2

PART 1 – GENERAL

1.1 SUMMARY

A. Section includes:

1. Epoxy terrazzo with divider and accessory strips including preparation of substrates.

2. Cast metal floor lettering installed integrally with terrazzo flooring is included in this Section.

B. Related Sections include the following:

1. Division 3 Section “Cast in Place Concrete”.
2. Division 7 Section “Joint Sealants”.
3. Division 9 Section “Tiling”.
4. Division 9 Section “Carpeting”.

1.2 SUBMITTALS

A. Product Data: Terrazzo Contractor shall submit Product Data for each type of product required for installation including:

1. Strip materials.

2. Sealer.

B. Shop Drawings: Terrazzo Contractor shall prepare and submit Shop Drawings that include plans, elevations, sections, component details and attachments to other work. Include terrazzo installation requirements. Show layout of the following:

1. Divider strips.

2. Expansion joint strips.

3. Accessory strips.

4. Terrazzo patterns.

C. Samples for Initial Selection: Terrazzo Contractor shall submit NTMA “Color Palette Brochure” showing full range of colors and patterns available for each terrazzo type.

D. Samples:

1. Terrazzo Contractor shall prepare and submit a maximum of three samples, sizes 12 by 12 inches for each color and type of terrazzo specified.

E. Qualification Data: Terrazzo Contractor shall submit two copies of qualification data.

1. Include list of projects indicating name and location of project, name of Owner, name and contact information for General Contractor, and name and contact information for Architect.

2. Include letter from NTMA with the name of the Project and name of member, stating current member status.

F. Material Certificates:

1. Epoxy Resin: For each type of resin required indicating that materials meet specification requirements, by manufacturer.

2. Aggregate: For each type of aggregate required indicating compatibility with terrazzo mix, signed by aggregate supplier.

G. Maintenance Literature: Terrazzo Contractor shall submit two copies of maintenance recommendations from NTMA.

1.3 QUALITY ASSURANCE

A. Acceptable Suppliers: A firm experienced in manufacturing products in accordance with NTMA standards and with a record of successful in-service performance, as well as sufficient production capacity to produce required materials.

B. Acceptable Terrazzo Contractor: Terrazzo Contractor shall be a Contractor Member of NTMA and shall perform all work in accordance with NTMA standards. If Terrazzo Contractor is not a Member of NTMA, they shall submit a list of competed projects within the past 5 years of similar magnitude, scope, and complexity.

C. Terrazzo Standards: Terrazzo Contractor shall furnish materials to comply with the applicable provisions and recommendations of the National Terrazzo and Mosaic Association, Inc. (NTMA) for all terrazzo types as specified.

D. Source Limitations for Aggregates: Materials for each color, grade, type and variety of granular materials shall be obtained from sources capable of providing materials consistent quality in appearance and physical properties. Materials furnished shall meet NTMA Specifications.

E. Material Manufacturers' Instructions: In addition to specified requirements, Terrazzo Contractor shall comply with manufacturers' instructions and recommendations, including preparation of substrate, storing, mixing and applying materials, finishing and curing of monolithic terrazzo work.

F. Mockups: Terrazzo Contractor shall construct a minimum 5'x5' mockup to verify selections made under Sample submittals and to demonstrate aesthetic effects and set quality standards for materials and execution.

1. Approved mockups may become part of the completed Work if undisturbed at time of Substantial Completion.

G. Pre installation Conference: The General Contractor shall conduct a conference at project site before Terrazzo Contractor begins installation.

1. The General Contractor shall invite Terrazzo Contractor, the Architect and representatives of the Owner.

2. Review methods and procedures related to terrazzo including, but not limited to, the following:

a. Inspect and discuss condition of substrate and other preparatory work performed by other trades.

b. Review and finalize construction schedule and verify availability of materials, installer's personnel, equipment and facilities needed to make progress and avoid delays.

c. Review terrazzo mixes and patterns.

d. Review custom terrazzo mixes, designs and patterns.

e. Coordination with the work of other installers.

1.4 PERFORMANCE REQUIREMENTS

A. Epoxy Resin:

1. Test Specimens: Mix resin materials according to manufacturer's recommendation without aggregate added and cure for 7 days at 75 degrees plus or minus 2 deg. F and 50 percent plus / minus 2 percent relative humidity.

2. Cured test specimens shall meet or exceed the following requirements:

a. Hardness: 60 to 85 per ASTM D 2240, Shore D.

b. Minimum Tensile Strength: 3000 psi per ASTM D 638 for a 2-inch specimen made using a “C” die per ASTM D 412.

c. Minimum Compressive Strength: 10,000 psi per ASTM D 695, Specimen B cylinder.

d. Chemical Resistance: No deleterious effects by contaminants listed below after seven-day immersion at room temperature per ASTM D 1308.

(1) Distilled Water.

(2) Mineral Oil.

(3) Isopropanol.

(4) Ethanol.

(5) Soap solution at 1 percent.

(6) Sodium hydroxide at 10 percent solution.

(7) Hydrochloric acid at 10 percent solution.

(8) Hydrochloric acid at 30 percent solution.

(9) Detergent Solution at 0.025.

(10) Acetic Acid at 5 percent solution.

B. Epoxy Resin with Aggregate:

1. Test Specimens:

a. Mix epoxy resin according to manufacturer's recommendations and blend one volume of epoxy resin with 3 volumes of marble aggregate, consisting of:

(1) 60 percent No. 1 chip.

(2) 40 percent No. 0 chip.

b. Grind and grout with epoxy resin finished to a nominal 1/4-inch thickness.

c. Cure specimens 7 days at 75 deg. F plus / minus 2 deg. and 50 percent plus / minus 2 percent relative humidity.

2. Cured epoxy terrazzo specimens shall nominally meet the following requirements:

a. Flammability: Self- extinguishing, extent of burning 1/4 inch maximum according to ASTM D 635.

b. Coefficient of Linear Thermal Expansion: 0.000025 inch/inch per deg F for temperature range of minus 12 to plus 140 deg F per ASTM D 696.

c. Bond Strength of Epoxy Terrazzo: 300 psi in concrete according to ASTM D7234 (modified to cut slightly into concrete).

1.5 DELIVERY, STORAGE AND HANDLING

A. Materials shall be delivered to Project site in supplier's original wrappings and containers, labeled with source or manufacturer's name, material or product brand name, and lot number if any.

B. Materials shall be stored in their original, undamaged packages and containers, in a location where they will not be exposed to direct sunlight.

1. Epoxy components shall be stored in a space where the ambient temperature can be maintained 60 and 90 deg. F before use.

1.6 PROJECT CONDITIONS

A. Protect adjacent spaces from damage during installation.

B. Maintain ambient temperatures in the area to receive terrazzo at not less than 60 deg. F.

C. Maintain adequate ventilation in the area to receive terrazzo.

D. Protect other adjacent work from water and dust generated by grinding operations.

1.7 BUILD AMERICA, BUY AMERICA ACT (BABA)

A. This Project is subject to the Build America, Buy America Act (BABA), 41 U.S.C. §§ 8301–8305.

B. Domestic Manufacturing Requirements:

1. Iron and steel: All manufacturing processes, from melting through coating, shall occur in the United States.

2. Manufactured products: All manufactured products permanently incorporated into the project must be manufactured in the United States.

3. Construction materials: All manufacturing processes for construction materials shall occur in the United States.

C. Compliance Documentation:

1. Provide manufacturer's certification of domestic origin for all products.

2. Provide BABA compliance documentation with each product submittal. Refer to Section 01 33 00 Submittals.

3. Failure to provide BABA documentation will be grounds for rejection.

D. Waivers: **Waivers will not be considered.**

1.7 WARRANTY

A. One year from date of substantial completion of terrazzo installation.

B. Moisture Mitigation and System Compatibility Warranty: Terrazzo Contractor shall warrant that the moisture vapor mitigation system, primer, and terrazzo flooring system are fully compatible and suitable for the installed substrate conditions. Failure of the terrazzo system due to moisture vapor transmission, bond failure, or incompatibility between system components shall be repaired or replaced at no additional cost to the Owner.

PART 2 – PRODUCTS

2.1 MATERIALS

A. Epoxy Resin Matrix: Two-component, high solids product complying with specified performance requirements.

B. Color: As required for mix indicated.

C. Primer: Terroxy Primer or Terroxy Moisture Vapor Treatment (for slabs on-grade or light weight and green concrete).

1. Moisture vapor mitigation system shall be included as part of the Work and installed in accordance with manufacturer's written instructions. Moisture testing shall be performed for verification purposes only and shall not relieve the Contractor of providing a complete moisture mitigation system.

D. Aggregates: Marble, glass, and synthetic.

1. Comply with NTMA gradation standards.

2. Abrasion and Impact Resistance: Loss of 40 percent or less when tested according to ASTM C 131 (LA Abrasion).

3. Aggregates shall contain no deleterious or foreign matter.

E. Divider Strips: ZINC

1. Material: White Zinc or brass as selected by Architect during the shop drawing submittal phase.

a. Type A: "L" Strips, 1/4" width x 3/8" depth at edges of "river" between the two colors.

b. Type B: "L" Strips 1/8" width x 3/8" depth at control joints.

c. Gauge: 16 gauge

d. Top Thickness: 1/8" thick

2.2 ACCESSORIES

A. Sealer: Terrazzo Contractor shall provide a non-ambering, clear sealer that is chemically neutral; does not impair terrazzo aesthetics or physical properties; is recommended by terrazzo matrix manufacturer.

1. Water Based Acrylic Sealer Properties: Flashpoint not less than 80 deg. F when tested in accordance with ASTM D 56. Products classified as non-flammable or having a flash point exceeding 200 deg. F shall be acceptable.

B. Crack Suppression/Isolation Membrane: As recommended, produced, and supplied by approved terrazzo resin formulator, having minimum 120 percent elongation potential per ASTM D 412.

Provide crack suppression/isolation membrane to achieve a crack-free and warrantable installation. Include full cost of all required membrane, including preparation, installation, and coordination with terrazzo system, in the Base Bid.

2.3 METAL INLAID FLOOR LETTERS

A. General: Provide cast metal letters designed for integral installation within epoxy terrazzo flooring and grinding flush as part of the terrazzo finish system.

B. Material:

1. Cast zinc suitable for terrazzo applications.

2. Stainless steel is not permitted unless specifically approved by Architect.

C. Thickness: Minimum 3/8 inch; o accommodate grinding and polishing.

D. Edges: Vertical or slightly drafted sides; free of sharp edges, fins, voids, or casting defects.

E. Finish: As-cast or light satin polish suitable for terrazzo grinding; mirror-polished finishes are not permitted.

F. Fabrication: Provide letters sized and proportioned to maintain minimum 3/8-inch stroke width after grinding.

G. Submittals: Include shop drawings indicating letter layout, font, size, thickness, and setting depth coordinated with terrazzo patterns and divider strips.

2.4 MIXES

.

A. Color No. 1 (TZ1): Lighter Value

1. Epoxy Color Pigment: Match Sherwin-Williams SW 0037 Morris Room Grey

a. 10% Georgia White #0
b. 35% Georgia White #1
c. 10% China White #0
d. 10% China White #1
e. 10% One Sided Mirror Glass SM #0
f. 5% One Sided Mirror Glass SM #1
g. 20% Micro Blend Base #00

B. Color No. 2 (TZ2): Darker Value

1. Epoxy Color Pigment: Match Sherwin-Williams SW7525 Tree Branch

a. 10% Georgia White #0

b. 35% Georgia White #1
c. 10% China White #0
d. 10% China White #1
e. 10% One Sided Mirror Glass SM #0
f. 5% One Sided Mirror Glass SM #1
g. 20% Micro Blend Base #00

C. To comply with Build America, Buy America (BABA) requirements, provide terrazzo aggregates and glass chips manufactured in the United States.

Where specified glass chips are not available as a compliant domestic product, provide U.S.-manufactured alternatives or U.S.-sourced aggregates of similar color and size distribution to achieve the design intent.

D. All aggregates, pigments and divider strips shall be U.S. manufactured.

PART 3 – EXECUTION

3.1 EXAMINATION

A. The General Contractor, Architect, and Construction Manager shall examine substrates and areas, with Terrazzo Contractor present, for compliance with requirements for installation tolerances and other conditions affecting performance of the work.

1. Slab Flatness Tolerance: Subfloor is not to vary more than 1/4 inch from true plane in a 10 foot span.

2. Cracks: Locate cracks and joints in concrete substrates. Verify location of control joints and expansion joints in epoxy terrazzo flooring.

a. Locate cracks and joints in concrete substrates. Provide crack suppression/isolation membrane at all terrazzo areas to prevent transmission of substrate cracking through the finished terrazzo system. Install in accordance with terrazzo manufacturer’s written recommendations.

B. Contractor shall include all crack suppression/isolation measures necessary to deliver a crack-free and warrantable terrazzo installation. Recommendations by the Terrazzo Contractor shall not relieve the Contractor of this responsibility. Retain the services of an independent testing laboratory to verify that concrete substrates are dry by one of the methods below and moisture-vapor emissions are within acceptable levels according to epoxy resin manufacturer's written instructions.

1. Perform relative humidity test using in situ probes, ASTM F 2170. Proceed with installation only after substrates have a maximum 79 percent relative humidity level measurement.

2. Perform anhydrous calcium chloride test, ASTM F 1869. Proceed with application of resinous flooring only after substrates have maximum moisture-vapor-emission rate of 3 lbs. of water/1000 sq. ft. of slab area in 24 hours.

3. Moisture vapor mitigation system is required and shall be installed in accordance with terrazzo manufacturer's written instructions. Testing is for verification only and shall not relieve the Contractor of this requirement. Correct non-conforming concrete substrates using materials compatible with epoxy terrazzo flooring system and as approved by the Terrazzo Contractor.

4. Materials used to correct nonconforming conditions must be compatible with the selected epoxy system and be approved by the manufacturer of epoxy resin materials and Terrazzo Contractor.

C. Terrazzo Contractor shall proceed with installation only after unsatisfactory conditions, including flatness tolerances, cracking, and excessive moisture vapor transmission have been corrected. Start of installation is acceptance of all conditions.

3.2 PREPARATION

A. Broom clean area to receive terrazzo to remove loose chips and all foreign matter.

B. Mechanically abrade concrete surface by means of Shot Blasting to achieve ICRI concrete surface profile of 3-5.

C. Provide/install flexible epoxy crack isolation/suppression membrane in accordance with Section 2.2.B.

3.3 POURED-IN-PLACE TERRAZZO INSTALLATION

A. Strip Materials: Terrazzo Contractor shall install strip materials as follows:

1. Divider and Control-Joint Strips:

a. Locate divider strips in locations indicated.

b. Install control joint strips back to back in locations indicated.

c. Install strips in epoxy adhesive without voids below strips.

2. Accessory Strips: Install as required to provide a complete installation.

B. Metal Inlaid Letter Installation:

1. Install cast metal letters during terrazzo placement in locations indicated on Drawings and approved Shop Drawings.

2. Set letters securely and rigidly with epoxy, slightly proud of finished floor elevation to allow grinding flush.

3. Place terrazzo tightly around letters to eliminate voids and ensure full bond.

4. Grind and polish letters flush with adjacent terrazzo surfaces as part of the normal terrazzo finishing sequence.

5. Finished installation shall be smooth, level, and free of lippage, cracking, edge separation, or visual telegraphing.

C. Placing Terrazzo:

1. Prime subfloor in accordance with manufacturer's recommendations.

2. Proportion and thoroughly blend the materials.

3. Place mixture to achieve specified thickness.

D. Poured in Place Terrazzo Base: Terrazzo Contractor shall provide mix color for terrazzo base to match approved sample.

1. Terrazzo Contractor shall place and finish terrazzo base where shown at the same time the terrazzo floor is being installed.

E. Finishing: Terrazzo Contractor shall finish the terrazzo topping as follows:

1. Rough Grinding:

a. Grind with 24 or finer grit stones or with comparable diamond abrasives.

b. Follow initial grind with 60/80 grit stones or with comparable diamond abrasives.

2. Grouting:

a. Clean terrazzo with clean water and rinse. Allow to dry.

b. Apply epoxy grout per manufacturer's instructions.

c. Allow grout to cure 72 hours

3. Fine Grinding/Polishing: Grind with 120 grit or with comparable diamond abrasives until all grout is removed from surface.

F. Terrazzo Cleaning: Terrazzo Contractor shall clean finished terrazzo as follows:

1. Remove grinding residue from terrazzo surface.

2. Wash terrazzo surfaces immediately after final grinding of terrazzo flooring with water and allow surfaces to dry thoroughly.

G. Sealing: Terrazzo Contractor shall seal terrazzo according to sealer manufacturer’s written instructions.

3.4 REPAIR

A. Terrazzo Contractor shall repair terrazzo areas that evidence lack of bond between topping and underbed according to NTMA’s written recommendations.

3.5 PROTECTION

A. After application of the sealer, the Work shall be ready for final inspection and acceptance by the Owner or his agent.

B. Protect the finished floor after the Terrazzo Contractor has completed final grinding and applied sealer to terrazzo surfaces.

END OF SECTION

SECTION 11 40 00 – FOODSERVICE EQUIPMENT – ADDENDUM NO. 2

PART 1- GENERAL

1.1 SUMMARY

A. Section includes general requirements for food service equipment indicated on the Drawings, including coordination, delivery, installation, and related services.

B. Food service equipment is provided under an allowance as specified in Section 01 21 00 – Allowances. Equipment descriptions, capacities, and configurations indicated in the Contract Documents are provided to establish general design intent only.

1.2 FOOD SERVICE EQUIPMENT CONTRACTOR

A. Food Service Equipment Contractor or abbreviation FSEC or the term Bidder means the person, company or corporation that will contract for the work specified. For this project the General Contractor may also act in the capacity of the FSEC.

B. Food Service Equipment Contractor's Work Includes:

1. All labor, materials, equipment necessary for complete installation of equipment as indicated and specified.

2. Delivery, unloading, storing, assembly and setting in place indicated of all equipment specified.

3. Delivery of all loose fittings to other trades and coordination of same.

4. Protection of all equipment from fire, theft and damage, and coordination of same.

5. Inspection to see that all rough-ins and connections to equipment: mechanical, electrical, refrigeration, and ventilation; are made according to the intent of these specifications.

1.3 MECHANICAL AND ELECTRICAL

A. Mechanical and Electrical Contractors shall furnish utility rough-ins for all equipment, and all materials, fittings, labor, etc. required to extend from rough-in locations and make final connections to Food Service Equipment unless otherwise specified.

1.4 QUALITY ASSURANCE

A. General Standards: Except as otherwise indicated, comply with the following standards as applicable to the manufacture, fabrication and installation of the equipment and work of this section.

1. ADA Requirements.
2. NSF Standards: Provide NSF “Seal of Approval” on each manufactured item and on major items of custom-fabrication.
2. UL Standards: For electrical components and assemblies provide either UL labeled products, or where no labeling service is available “Recognized Markings” to indicate listing in the UL “Recognized Component Index” or ETL.
3. NFPA Standards: Comply with NFPA Bulletin 96, NEC Volume 5 and NEC for electrical wiring and devices.
4. National Electrical Code: Comply with NFPA Volume 5 for electrical wiring and devices included with Food Service Equipment.

B. All fabricated assemblies or electrically operated equipment shall have Underwriter’s Laboratories Approval, or UL Reexamination of Listing, or ETL in every case where such approval has been established for the type of device in question. Approval has been established when at least one type of device has been approved by UL or ETL.

C. All manufactured items of electrically operated equipment shall have UL or ETL, or UL/ETL Reexamination listing, in every case where such approval has been established for the type of device in question. Approval has been established when at least one type of device has been approved by UL or ETL.

1.5 SUBSTITUTIONS

A. Refer to Section 01 60 00 Product Requirements. It is intended for specifications to establish minimum quality and performance standards, which if met or are exceeded may qualify such equipment as an acceptable alternate source. The Architect will determine if an item of equipment submitted as an alternate to those listed in the documents is an acceptable substitute.

It is the responsibility of the FSEC to verify that any and all equipment items submitted for review as alternate(s) correspond and coordinate with the project drawings and specifications. Any project cost(s) incurred for structural, mechanical or electrical alterations to accommodate variances in approved alternate equipment will be the responsibility of the FSEC supplying the equipment.

1.6 SUBMITTALS:

A. Submit manufacturer’s or shop fabricator’s product information. Provide maintenance manuals, operating instructions, parts lists, precautions against hazards, manufacturer’s warranties and similar information. Mark each data sheet or brochure with FSEC’s name and address, project name and location, and applicable project equipment item number(s). Indicate all options to be provided.

1.7 PRODUCT HANDLING

A. Protect all equipment from damage during shipping, storage,

handling, installation and construction of other work in same spaces. Wrap and crate each item of equipment as needed for protection from damage.

1. Cover all exposed stainless steel surfaces with self-adhesive protective paper of a type recommended by the manufacturer. Do not remove until work is installed and equipment is ready for cleaning and start-up.

1.8 BUILD AMERICA, BUY AMERICA (BABA)

A. This Project is subject to the Build America, Buy America Act (BABA), 41 U.S.C. §§ 8301–8305.

B. Domestic Manufacturing Requirements:

1. Iron and steel: All manufacturing processes, from melting through coating, shall occur in the United States.

2. Manufactured products: All manufactured products permanently incorporated into the project must be manufactured in the United States.

3. Construction materials: All manufacturing processes for construction materials shall occur in the United States.

C. Compliance Documentation:

1. Provide manufacturer's certification of domestic origin for all products.

2. Provide BABA compliance documentation with each product submittal. Refer to Section 01 33 00 Submittals.

3. Failure to provide BABA documentation will be grounds for rejection.

D. Waivers: **Waivers will not be considered.**

1.9 WARRANTY

A. Provide standard manufacturer's warranties for each piece of equipment.

1.10 ALLOWANCE BASED PROCUREMENT

A. Food service equipment is provided under an allowance as specified in Section 01 21 00 – Allowances.

PART 2 – PRODUCTS

2.1 GENERAL REQUIREMENTS

A. Provide food service equipment complete and ready for operation, meeting

performance requirements, capacities, and dimensional constraints indicated on the Drawings.

B. Equipment shall comply with applicable NSF, UL/ETL, and ADA requirements.

C. Furnish products in full compliance with BABA requirements. Where compliant products are not reasonably available, notify Architect prior to procurement.

D. Coordinate all equipment with utility requirements, rough-ins, and clearances indicated.

PART 3 – EXECUTION

3.1 INSPECTION AND PREPARATION

A. Inspect all submittals to see that they do not conflict with documents published by Architect. FSEC is responsible for verifying all dimensions, quantities, construction details, finishes, sizes, etc.

B. Rough-In Work: FSEC must visually examine the rough-in mechanical and electrical services by others, prior to pouring of floors or closing of walls, and the installation of floors, walls, columns and ceilings by others, and the conditions under which the work is to be done. He must visually verify dimensions of the services and substrates before fabricating the work.

C. Verify all rough-ins and utility connections prior to equipment procurement. Contractor is responsible for coordination of equipment with building systems.

3.2 INSTALLATION

A. Installation equipment according to manufacturer's written instructions.

3.4 CLEANING, RESTORING FINISHES

A. After completion of installation, and completion of major work in Kitchen area, remove protective coverings, if any, and clean Food Service Equipment, internally and externally. Restore exposed and semi-exposed finishes to remove abrasions and other damages. Polish exposed metal surfaces and touch-up painted surfaces. Replace work which cannot be successfully restored.

3.5 TESTING, START-UP AND DEMONSTRATION

A. General: Delay the start-up of Food Service Equipment until service lines have been tested, balanced, and adjusted for pressure, voltage and similar considerations, and until water lines have been cleaned and treated for sanitation.

B. Test each item of operational equipment to demonstrate that it is operating properly, and that controls and safety devices are functioning. Repair or replace equipment which is found to be defective in its operation, including units which are below capacity or operating with excessive noise or vibration.

C. Final Cleaning: After testing and start-up, clean and sanitize the Food Service Equipment, and leave in a condition ready for use in food service.

D. After compliance of the work and after the final inspection has been completed and approved scheduled demonstration must take place for all items of equipment. Such demonstration shall be supervised by Architect/Owner showing operational as well as preventive maintenance procedures.

3.6 FOOD SERVICE EQUIPMENT LIST

A. Final equipment shall be provided under the Food Service Allowance specified in Section 01 21 00 – Allowances.

Item #1 Microwave

Provide built-in microwave unit of size and capacity indicated on Drawings, complete with controls, turntable, and standard accessories.

- Approximate capacity: 2.0 to 2.5 cubic feet
- Stainless steel finish
- Minimum 1,000 watts
- Standard residential-type controls and accessories
- Built-in to millwork

Item #2 Refrigerator / Freezer

Provide refrigerator/freezer unit of size and configuration indicated on Drawings, including shelving, ice maker, and temperature controls.

Provide side-by-side refrigerator/freezer unit:

- Approximate capacity: 20 to 25 cubic feet
- Stainless steel finish
- Ice maker and water dispenser
- Adjustable shelving

Item #3 Stackable Washer and Dryer

Provide stacked or unitized washer and dryer system of size and capacity indicated, complete with controls and required connections.

- Electric dryer
- Residential-grade appliance
- Minimum capacities comparable to typical 3.5–4.0 CF washer / 5.5–6.0 CF dryer

END OF SECTION

SECTION 22 42 13 - COMMERCIAL PLUMBING FIXTURES – ADDENDUM NO.2

PART 1 - GENERAL

1.1 BUILD AMERICA, BUY AMERICA ACT (BABA)

A. This Project is subject to the Build America, Buy America Act (BABA), 41 U.S.C. §§ 8301–8305.

B. Domestic Manufacturing Requirements:

1. Iron and steel: All manufacturing processes, from melting through coating, shall occur in the United States.

2. Manufactured products: All manufactured products permanently incorporated into the project must be manufactured in the United States.

3. Construction materials: All manufacturing processes for construction materials shall occur in the United States.

C. Compliance Documentation:

1. Provide manufacturer's certification of domestic origin for all products.

2. Provide BABA compliance documentation with each product submittal. Refer to Section 01 33 00 Submittals.

3. Failure to provide BABA documentation will be grounds for rejection.

D. Waivers:

1. **Waivers will not be considered**.

1.2 MANUFACTURERS

A. Provide plumbing fixtures and drains as listed on drawings and described herein. Fixture numbers are Kohler products. Equal fixtures by Zurn, American Standard, Crane or Sloan will be considered equivalents.

B. All drainage products to be Josam, Zurn, J.R. Smith, MIFAB, Wade or Watts. All drains installed above slab to be complete with clamping device.

C. Stainless steel sinks shall be Just, Elkay, or Kohler.

D. Flush valves shall be Zurn-AV or Sloan Royal, no exceptions.

E. Pressure balancing shower valves shall be Symmons, Leonard (Pam II), or Powers Hydro Guard T/P 700 series.

F. Commercial or public faucets shall be Zurn, Chicago Faucets, Symmons, Kohler, American Standard, or Speakman.

G. Gooseneck faucets shall be Zurn, Chicago Faucet, T & S, Kohler, American Standard, or Speakman.

H. Fixture supplies, stops, and traps to be commercial grade McGuire, E.B.C., Zurn, or approval equal. Traps to be 17 gauge with wall flange. Supplies and stops to be heavy pattern with wheel handle unless noted otherwise.

I. Water closet seats shall be Bemis, Church, Kohler, Beneke, or Olsonite.

J. Thermostatic mixing valves shall be Symmons, Holby, Powers, or Leonard.

K. China or enamel fixtures to be white color, unless otherwise noted.

L. All wall-mounted lavatories shall be capable of supporting a minimum vertical load of 250 pounds. Install wall-mounted lavatories with floor-anchored carriers which fit in standard stud walls.

M. All products used for dispensing potable drinking water must be lead free and meet the requirements of NSF 61 and NSF 372 test standards via third party testing and certification.

PART 2 - PRODUCTS

2.1 FIXTURES

P-1 Water Closet - Public, Wall Mounted, Barrier-Free, 1.6 Gallon:
Sloan ST-2469
Sloan Bemis – 2155SSCT seat
Sloan CX 8158-1.6-GR hardwired sensor flush valve
Zurn Z1201-N_4-XH wall carrier
Install 17" from rim to finished floor

P-2 Water Closet - Private, Wall Mounted, Barrier-Free, 1.6 Gallon:
Sloan ST-2469
Sloan Bemis – 2155SSCT seat
Sloan CX 8158-1.6-GR hardwired sensor flush valve
Zurn Z1201-N_4 wall carrier
Install 17" from rim to finished floor

P-3 Urinal, Barrier-Free:
Sloan SU-7019
Sloan CX 8198-0.5-GR hardwired sensor flush valve
Zurn Z1222 wall carrier
Install 17" from rim to finished floor

P-4 Lavatory, Undermount, Barrier-Free, Public:
Bradley WB1-WB-ER1
Leonard Model 170-LF mixing valve
Zurn Z8746 offset grid drain
McGuire LFCK2165 supplies
Zurn Z8700 p-trap

P-5 Lavatory, Wall Hung, Barrier-Free, Public:
Kohler K-2005
Zurn Z6915-XL-CWB hardwire sensor faucet
Leonard Model 170-LF mixing valve
Zurn Z8746 offset grid drain
McGuire LFCK2165 supplies
Zurn Z8700 p-trap
Zurn Z8946-3 trap wrap kit

P-6 Electric Water Cooler (Split Level), Barrier-Free:
Elkay LZWS-LRPBM28K
McGuire LFCK02 stop
Zurn Z8700 p-trap
Install with bubbler 36" above finished floor

P-7 Service Sink:
Stern-Williams SBC-1500 BP (24"x 24"x12") with stainless steel caps, two tiling flanges, back panels (corner mounted sink).
T&S Brass BA-0665-BSTR faucet with vacuum breaker
Provide in-line spring-loaded check stops

P-8 Single Compartment Sink, Kitchen Faucet:
Kohler Vault K-3894
Kohler Tone K-23766 touchless pull-down faucet
Leonard Model 170-LF mixing valve
McGuire LFCK2165 supplies
Zurn Z8740 basket drain
Zurn Z8702 p-trap

P-9 Single Compartment Sink, Kitchen Faucet:
Kohler Strive K-5287
Kohler Tone K-23766 touchless pull-down faucet
Leonard Model 170-LF mixing valve
McGuire LFCK2165 supplies
Zurn Z8740 basket drain
Zurn Z8702 p-trap

P-10 Washing Machine Connection:
Oatey 38535 with water hammer arrestors

P-11 Ice Machine Connection:
Oatey No. 39140 metal ice maker box with metal face plate
Box with valve and water hammer arrestor

P-12 Wall Hydrant, Exterior:
Woodford Model B67, encased box with hinged lockable cover, non-freeze with vacuum breaker and stainless steel face
Install 18" above finished grade

P-13 Hose Reel System:
T&S Brass and Bronze Works B-7242-U01WS8BC, 50' epoxy coated open hose reel w/ stainless steel surface mounted control cabinet

P-14 Linear Drain:
Ebbe America E6100-50 tile over line drain

P-15 Floor Drain, Regular:
Zurn ZN-415-P-Y B strainer, nickel bronze top, trap primer, sediment bucket

P-16 Floor Drain, 9” Mechanical Room:
Zurn ZN-508-P-Y, nickel bronze top, sediment bucket, trap primer

PART 3 - EXECUTION

3.1 REQUIREMENTS

A. Water closets shall be installed complete with wall carriers, wax rings, bolt caps, and flush valves (or float valves).

B. Elevated vacuum breakers, where specified, shall be installed 7'-6" above the finished floor.

C. Countertop sinks shall be installed complete with required mounting rim or clips.

D. After installation, all fixtures shall be cleaned and labels removed. Where fixtures are in contact with walls, floors, or countertops, caulking shall be applied. Caulking shall be General Electric white silicon sanitary sealant.

E. Water closets identified on plans as barrier free fixtures shall have the flush valves installed per American Disabilities Act. Flush valves shall have the handle installed on the wide side of the stall. Coordinate with the architectural drawings.

F. Non pre-fabricated showers shall have chloraloy 240 brand non-plasticized chlorinated polyethylene concealed waterproofing membrane .040 inch thick. Installation shall be per manufacturers recommendations.

G. At each floor drain installed above slab on grade, install a 36" x 36" apron equal to chloraloy 240 brand non-plasticized chlorinated polyethylene concealed waterproofing membrane, .040 inch thick, waterproofing membrane to be installed per manufacturers recommendations.

END OF SECTION

SECTION 28 23 00 **-** VIDEO SURVEILLANCE – ADDENDUM NO. 2

PART 1 - GENERAL

1.1 WORK INCLUDED

A. The work includes furnishing all labor, materials, tools, equipment, and documentation required for a complete CCTV system whether listed in the specification and drawings or not.

1.2 SUBMITTALS

A. The contractor shall submit all items in accordance with the requirements of Division Submittals and shall include but not be limited to the following:

1. Manufacturer's catalog data sheets for all components

2. Input power requirements for all components

3. Complete vendor specific engineered drawings indicating:
   a. Manufacturer model numbers and specifications
   b. Dimensions, layouts, installation details
   c. Point-to-point wiring diagrams for all devices
   d. Termination details for all devices
   e. Single-line system drawings representing the entire system
   f. Interfaces with all sub-systems, if any

4. One (1) sets of the Manufacturer's User's Manuals and Installation Manuals.

5. Course outlines for each of the end user training programs. The course outlines shall include the course duration, location, pre-requisites, and a brief description of the subject matter.

1.3 REFERENCE STANDARDS

A. Design and operation of the system shall conform to the following referenced codes, regulations, and standards as applicable:

1. National Electrical Code (NEC)
2. UL294
3. FCC & IC Rules and Regulations
4. Subpart J of Part 15, Radio Frequency Devices
5. National Electrical Manufacturers Association (NEMA)
6. Applicable Federal, State, and Local laws, regulations, and codes.

1.4 QUALIFICATIONS

A. The manufacturer of the proposed Electronic Security System (ESS) equipment must be ISO 9001 certified and meet the manufacturing process guidelines outlined in ISO 9001.

B. The provider of the proposed system shall have a minimum of 10 years experience in the manufacture, installation, service and support of CCTV systems.

C. This company shall have a fully staffed office of sales and technical support representatives within a one day travel time to the project.

1.5 BUILD AMERICA, BUY AMERICA (BABA)

A. This Project is subject to the Build America, Buy America Act (BABA), 41 U.S.C. §§ 8301–8305.

B. Domestic Manufacturing Requirements:

1. Iron and steel: All manufacturing processes, from melting through coating, shall occur in the United States.

2. Manufactured products: All manufactured products permanently incorporated into the project must be manufactured in the United States.

3. Construction materials: All manufacturing processes for construction materials shall occur in the United States.

C. Compliance Documentation:

1. Provide manufacturer's certification of domestic origin for all products.

2. Provide BABA compliance documentation with each product submittal. Refer to Section 01 33 00 Submittals.

3. Failure to provide BABA documentation will be grounds for rejection.

D. Waivers: Waivers will not be considered.

PART 2 - PRODUCTS

2.1 MATERIALS AND EQUIPMENT

A. All materials and equipment used in carrying out these specifications to be new and have UL listing. Acceptable systems are Avigilon or Axis. Alternate CCTV systems will be considered at the discretion of the designer.

B. All systems and components shall have been thoroughly tested and proven in actual use.

C. All systems and components shall be provided with the availability of a toll free (U.S. and Canada), 24-hour technical assistance program (TAP) from the manufacturer. The TAP shall allow for immediate technical assistance for either the dealer/installer or the end user at no charge.

D. All systems and components shall be provided with a one-day turn around repair express and 24-hour parts replacement. The repair and parts express shall be guaranteed by the manufacturer on warranty and non-warranty items.

2.2 CCTV EQUIPMENT

A. Fixed Mount, In Ceiling, Indoor Dome

1. The indoor fixed mount, in ceiling CCTV camera dome shall consist of a 5.9" lower dome bubble and back box assembly together with a fixed camera mount.

2. The lower dome shall meet or exceed the following design and performance specifications:
   a. The lower dome shall be a maximum of 5.9" in diameter and extend to a maximum of 3.25" below the ceiling when installed in the back box.
   b. The lower dome shall be of acrylic material, optically clear with no distortion in any portion of the dome, to +2 above the horizontal.
   c. The lower dome shall be provided with a smoked tint and a maximum of ½ F stop light loss.
   d. The lower dome and trim ring shall easily snap and fasten into place.
   e. The lower dome shall weigh a maximum of 3 oz.

3. The indoor fixed mount, in ceiling dome shall be provided with a manufacturer's warranty covering repair or replacement of defective parts for a period of one year from the date of shipment.

B. Indoor/Outdoor Integrated CCTV Camera And Surface-Mount Dome Enclosure

1. The indoor/outdoor integrated CCTV camera and enclosure shall consist of a temper/impact resistant, surface-mount dome enclosure with integrated fixed camera and lens. The integrated camera and lens shall consist of a camera and lens module that is packaged separately for shipment and which shall allow the installation of the enclosure to precede installation of the camera and lens.

2. The tamper/impact resistant dome enclosure shall meet or exceed the following design and performance specifications:
   a. Tamper resistant, pin-in-hex screws and tightening tool shall be provided to secure the cover assembly to the enclosure body.
   b. The dome shall consist of 3.75-inch diameter, .125-inch thick polycarbonate high security bubble that has high optical clarity and nominal distortion of all camera angles.
   c. The bubble shall be puncture-proof, capable of withstanding pointed impact forces of 35 foot-pounds without creating an internal depression greater than 0.2 inches.
   d. The bubble shall be impact resistant, capable of withstanding repeated multiple blunt impact forces up to 100 foot-pounds.
   e. The enclosure shall be NEMA 4 and IP 66 rated.
   f. The enclosure, when loaded with camera and integrated low temperature resistor array, shall be capable of operation down to -50 degrees F and de-icing down to -10 degrees F.
   g. The integrated camera system shall be capable of accepting either 12 VDC (+/-10%) or 24 VAC (+/-10%) input power.
   h. Inside the enclosure shall be provided a connector board that has terminals for connecting 24 VAC or 12 VDC power.
   i. The enclosure, when loaded with camera and integrated low temperature resistor array, at temperatures above 35 degrees F, shall consume less than 2 watts of power and under 35 degrees F, shall consume no more than 13 watts of power.
   j. The CCD camera shall consist of either a 1/4-inch or 1/3-inch format interline transfer imager meeting NTSC (EIA) signal format specifications and high resolution color capable of 470 lines of horizontal resolution.
   k. The high resolution color camera shall be available with a 3mm to 9mm vari-focal length lens with on/off DIP switch for auto iris capability. This camera shall utilize a 1/4-inch CCD imager and shall be capable of electronic light control, commonly referred to as electronic shutter.
   l. During installation and camera adjustment, the module design shall allow adjustment of the camera on threes axes to allow maximum flexibility during scene adjustment. The three axes shall be pan, tilt and rotation.
   m. The camera and lens, when installed on a wall or vertical surface, shall be capable of 180 degrees of pan and no less than 140 degrees of tilt.

C. Outdoor Enclosure

1. The outdoor enclosure shall allow the use of cameras with fixed focal length lenses motorized zoom lenses (with or without auto iris operation) and shall allow for indoor/outdoor applications. The outdoor enclosure shall have a front hinged lid to provide easy access to the removable camera sled and shall have two adjustable (PG13.5) glands on the bottom of the enclosure for easy installation of the power and video cables. Allowable (factory installed) options shall include heater-defroster, blower, and sun shroud.

2. The outdoor enclosure shall meet or exceed the following design and performance specifications.
   a. Environmental Specifications
      1) Environment: Indoor/outdoor
      2) Temperature: -10 to 120 F (-23 to 49 C)
   b. Physical Specifications
      1) Construction: Extruded and die-cast aluminum
      2) Finish: Gray polyester powder coat
      3) Unit Weight EH3512: 3.49 lb (1.58kg)
   c. Mechanical Specifications
      1) Camera Mounting: Multiple holes on adjustable camera sled; camera sled can be inverted for additional camera evaluation
      2) Accepts camera and lens combinations* (including BNC connector) up to 2.87" W x 3.00" H (7.28 x 762 cm) and the following length: EH3512 - ½/3: 9.00" (22.86 cm)
      3) Viewing Window Area: 2.25" H x 2.63" W (5.71 x 6.68 cm)
      4) Cable Entry: Two PG13.5 compression glands on bottom; 0.47-inch (1.19 cm) maximum cable diameter.
      5) Cable Entry Holes: 0.875-inch (2.22 cm) diameter, will accept 0.5-inch (1.27 cm) conduit fitting when compression gland is removed
      6) Latch: Link-lock No. 3, stainless steel; can be secured with padlock (not supplied)
      7) CE compliant

D. Digital Video Recorder

1. The digital video recorder (DVR) shall provide a high-quality recorder capable of storage and playback of images from 1 to 16 camera inputs at a simultaneous refreshing recording rate of up to 480 images per second (NTSC) at CIF resolution with a CR-RW as standard equipment. Refer to paragraph B.8 for total frame rates at 2 CIF and 4 CIF resolutions. The DVR shall possess a watchdog system, triplex operation, Windows® 2000 operating system with Service Pack 4 with the latest security updates from Microsoft, watermarking of each frame, inputs for external alarms, video motion detection, and scheduled event recording. Remote software shall be provided for operation via PC, web and pocket PC handheld devices.

2. The DVR shall meet or exceed the following design and performance specifications.
   a. Up to 16 camera inputs and outputs with auto termination
   b. Maximum internal storage capacity of 10 TB
   c. Multiple displays for live viewing or playback while recording
   d. Continuous, motion detection, alarm and scheduled recording
   e. Ability to connect multiple DX8000's together
   f. Ability to support five simultaneous clients
   g. Network bandwidth throttling
   h. 11x digital zoom on playback
   i. Pre-motion and pre-alarm recording
   j. On-screen PTZ control and positioning device programming capability
   k. Up to 16 channels of audio recording (optional)
   l. Includes remote PC, web and handheld client software
   m. Proprietary compression technology offering high-quality and small file sizes
   n. 8/16 alarm inputs and 8/16 relay outputs

o. Security and lockdown protection based on NIST and Microsoft® standards
p. Expandable RAID storage with the use of DX9200HDDI video storage unit

PART 3 - EXECUTION

3.1 COORDINATION

A. Intent:

1. These sections of specifications and drawings form a complete set of documents for the electrical work of this project. Neither is complete without the other. Any item mentioned in one shall be as binding as though mentioned in both.

2. The intent of these specifications and drawings is to form a guide for a complete electrical installation. Where an item is reasonably necessary for a complete system but not specifically mentioned, such as pull boxes, fittings, expansion fittings, support hangers, etc., provide same without additional cost to Owner.

3. Electrical layouts indicated on drawings are diagrammatical only. Exact location of outlets to be governed by project conditions. The Designer reserves the right to make any reasonable changes (approximately 6 feet) in location of junction boxes, or equipment prior to roughing-in of such without additional cost to Owner.

B. Deviations:

1. No deviations from specifications and drawings to be made without full knowledge and consent of Designer.

2. Should Contractor find during progress of work that conditions make desirable a modification of the requirements of any particular item, report such item promptly to Designer for his decision and instructions.

C. Insofar as it is possible to determine in advance, leave proper chases and openings. Place all outlets, anchors, sleeves, and supports prior to pouring concrete or installation of masonry work. Should contractor neglect doing this, any cutting and/or patching required to be done is at this contractor's expense.

D. Visit site and be informed of conditions under which work must be performed. No subsequent allowance will be made because of error or failure to obtain necessary information to completely estimate and perform work involved.

E. Designer to be mediating authority in all design related deviations and disputes arising on the project.

3.2 INSTALLATION

A. Install system per the supplier's guidelines.

3.3 TESTING AND COMMISSIONING

A. The CCTV supplier shall be responsible for final system hardware hook-up and checkout prior to commissioning the system to the end-user. The CCTV supplier shall furnish documentation of commissioning to the Contractor and the Designer.

3.4 TRAINING AND INSTRUCTION

A. The CCTV system provider shall customize a training program to be implemented at the customer site. Training period shall be 3 working days.

3.5 WARRANTY

A. The system Software shall be warranted for a period of 90 days from date of delivery.

B. The product (as distinguished from Software) shall be warranted to be free from defects in material and workmanship under normal use for a period one year from the date of first beneficial of all or any part of the product or 12 months after product shipment, whichever is earlier.

C. Designer reserves right to accept or reject any part of installation which does not successfully meet requirements as set out in these specifications.

D. Contractor shall and hereby does guarantee all work installed under this division shall be free from defects in workmanship and materials. The above parties further agree that they will repair and replace any defective material or workmanship which becomes defective within the terms of this warranty-guarantee.

END OF SECTION

Project No. STBG-0010-01(180)

SECTION 33 13 01
DISINFECTION CHEMICAL SYSTEM

1.0 GENERAL

1.1 The Work in this Section shall include furnishing all materials, equipment, and labor necessary to provide a disinfection chemical system with all pumps, electrical, tanks and appurtenances as specified herein.

1.2 RELATED SECTIONS

C-700 General Conditions

1.3 MEASUREMENT AND PAYMENT

Payment for work in this section shall be included in the unit price / lump sum price as outlined in the Bid. Bid price shall include all cost of labor, materials and incidentals complete.

1.4 SUBMITTALS

The following shall be submitted in accordance with Section 7.16 of the General Conditions, in sufficient detail to show full compliance with the specification:

SD-01 Shop Drawings:
1. Submit for approval detailed drawings, data and descriptive literature on all equipment and appurtenances, including:
   a. Dimensions.
   b. Capacities for Pumps.
   c. Materials of construction.

SD-02 Quality Control:
1. Manufacturer's Certificates:
   a. Submit manufacturer's certificates of compliance with NSF, AWWA and other Standards, as applicable.
2. Manufacturer's Service Report:
   a. Certify that all equipment is properly installed and adjusted, except as noted.
   b. Recommend corrective action for any deficiencies noted.

SD-03 Contract Closeout:
1. Operation and Maintenance Data:
   a. Submit a detailed operation and maintenance manual for all equipment and appurtenances provided under this Section including the following information:
      1. Product name and number.
      2. Name, address and telephone number of manufacturer and local distributor.
      3. Instruction bulletins for operation and maintenance
      4. Complete parts and recommended spare parts lists.

1.5 QUALITY ASSURANCE

1.5.1 Manufacturer's Qualifications

1.5.1.1 All equipment and appurtenances provided under this Section shall be the standard product in regular production by manufacturers whose products have proven reliable in similar service for at least two years.

1.5.1.2 All equipment, piping and accessories shall meet NSF requirements.

1.6 DELIVERY, STORAGE AND HANDLING

1.6.1 Handle all equipment and appurtenances with care.

1.6.2 Equipment and appurtenances which are cracked, chipped, distorted or otherwise damaged or dropped will not be acceptable.

1.7 WARRANTY

1.7.1 All equipment, unless otherwise stated, shall be warranted by the manufacturer for 12 months from date of start-up not to exceed 18 months from date of shipment.

2.0 PRODUCTS

2.1 EQUIPMENT AND MATERIALS

2.1.1 Sodium Hypochlorite Chemical Metering Pumps

2.1.1.1 The two sodium hypochlorite metering pumps shall be a positive displacement electromagnetic solenoid type. The metering pumps shall be provided with visual pump-operational status.

2.1.1.2 Each pump shall have a maximum capacity of 1.0 gph at 140 psi/9.7 bar.

2.1.1.3 Each chemical metering pump housing shall be of chemically resistant glass fiber reinforced thermoplastic. All exposed fasteners shall be stainless steel. The liquid end construction material shall be Acrylic.

2.1.1.4 The output volume shall be adjustable while pumps are in operation from zero to maximum capacity. Adjustment shall be by means of readily accessible dial knobs, one for changing stroke length and the other for changing stroke frequency (speed). The pump shall have manually adjustable stroke length and frequency.

2.1.1.5 Each pump drive shall be totally enclosed with no exposed moving parts. Solid state electronic pulser shall be fully encapsulated with no exposed printed circuit etch and with quick connect terminals at least 3/16 inch (4.75 mm) wide. Electronics shall be housed in chemical resistant enclosure at the rear of the pumps for maximum protection against chemical spillage.

2.1.1.6 Pumps shall be equipped with an automatic pressure relief system which shall automatically stop pulsating when discharge pressure exceeds pump pressure rating by not more than 35%.

2.1.1.7 Each pump shall be equipped as a standard with a four function valve that make priming easy and prevent anti-siphoning. A bleed four function valve which automatically bleed off trapped gasses that often cause loss of prime shall be provided as an option. Chemical metering pump valves shall be ball type with the balls seating on combination valve seat and seal ring. Valve seat and seal ring shall be renewable by replacing only the combination seat-seal ring.

2.1.1.8 Pump power requirements shall be 120 Vac, 50/60 Hz, 1 phase power. Electrical power consumption shall not exceed 87 watts under full speed and maximum pressure conditions.

2.1.1.9 Each pump shall be capable of automatic operation paced off a flowmeter or input signal from the Controller.

2.1.1.10 The following pump accessories shall be provided:

a. One (1) injection check valve.
b. One (1) suction valve.
c. One (1) foot valve.
d. One (1) lot of tubing, 16 feet of polyethylene (6’ of vinyl and 9’ of poly)
e. One (1) stainless steel wall mounting bracket

2.1.1.11 The chemical metering pumps shall be BLUE-WHITE, EMEC, or LMI.

2.1.2 Sodium Hypochlorite Tank

2.1.2.1 The sodium hypochlorite storage tank shall be constructed of polyethylene. The polyethylene top shall have a vented, closable lid for adding liquid sodium hypochlorite and prevent contamination from dust or insects.

2.1.2.2 The tank shall have a nominal capacity of 50 gallons. Calibration marks shall be in gallons. The tank shall be natural in color.

2.1.2.3 A minimum of 50 gallons of sodium hypochlorite shall be provided for start-up and testing.

3.0 <u>EXECUTION</u>

3.1 EXAMINATION

3.1.1 The Contractor shall inspect all equipment immediately upon receipt.

3.2 PREPARATION

3.2.1 The equipment shall not be installed, if damaged, until repairs have been made in accordance with the manufacturer's written instructions.

3.3 INSTALLATION

3.3.1 The Contractor shall install the equipment in accordance with the drawings and manufacturer's recommendations.

3.4 DEMONSTRATION

3.4.1 The equipment manufacturer shall furnish the services of a qualified field engineer to check installation and provide start-up and testing accordance with the manufacturer's written instructions.

3.4.2 After start-up and testing, the manufacturer's representative shall instruct operating personnel in the proper operation and maintenance of the equipment.

3.4.3 The manufacturer's representative shall provide the following minimum service requirements:
a. 1- 4-hour day on site for start-up, testing and operator training

* * END OF SECTION * *

SECTION 44 41 13.16

PACKAGED BIOLOGICAL WASTEWATER TREATMENT PLANT

1.0 GENERAL

1.1 The Work in this Section shall include furnishing all materials, equipment, and labor necessary for the installation of one (1) prefabricated steel Wastewater Treatment System, complete and ready for operation in accordance with the plans and specifications stated herein. The complete system shall include all necessary equipment for efficient plant operation. The system shall be factory assembled, so far as possible, with all piping and controls. All surfaces shall be factory painted.

1.2 RELATED SECTIONS

General Conditions

1.3 MEASUREMENT AND PAYMENT

Payment for Work in this section shall be included in the unit price / lump sum price as outlined in the Bid. Bid price shall include all cost of labor, materials, and incidentals complete.

1.4 REFERENCES

The publications listed below form part of this specification. Each publication shall be the latest revision and addendum in effect on the date this specification is issued for construction unless noted otherwise. Except as modified by the requirements specified herein or the details of the drawings, Work included in this specification shall conform to the applicable provisions of these publications.

ASTM A36	Standard Specification for Carbon Structural Steel
ASTM A48	Standard Specification for Gray Iron Castings
ASTM A53	Standard Specification for Pipe, Steel, Black and Hot-Dipped, Zinc-Coated, Welded and Seamless

1.5 SYSTEM REQUIREMENTS
1.5.1 Design Requirements

1.5.1.1 The wastewater treatment system shall be of the activated sludge type, specifically know as "Complete Mix/ Extended Aeration Activated Sludge ".

1.5.1.2 The system shall be designed for treating a total of 15,000 gallons per day of 300 mg/l BOD5; 300 mg/l TSS, 65 mg/l TKN domestic sewage based on composite sewage samples of the average daily flow. No substances shall be introduced in quantities, which are toxic to biological organisms.

1.5.1.3 The plant shall be designed to handle average daily flows fluctuating over the range of 35% to 100% of design flow and peak daily flow rates not to exceed 250% of design flow, with an effluent quality of < 30 mg/l-BOD5; < 30 mg/l TSS, < 2 mg/L Ammonia-N.

1.6 SUBMITTALS

The following shall be submitted in accordance with the General Conditions, in sufficient detail to show full compliance with the specification:

SD-01 Product Data.

SD-02 Shop Drawings.
SD-03 Quality Control:
a. Design Data
b. Test Reports
c. Certificates
d. Manufacturer's Instructions
e. Manufacturer's Field Reports

SD-04 Contract Close-out:
a. Project Record Documents
b. Operation and Maintenance Manuals

SD-05 Data Warranty.

1.7 WARRANTY

1.7.1 Manufacturer warrants to the original purchaser all new equipment manufactured by it to be free of defects in material and workmanship; and at the election of Manufacturer will repair or replace, f.o.b. it's factories or other locations designated and as determined by Manufacturer any part or parts returned to it, transportation/freight prepaid, which examination shall show to have failed under normal use and service by the original user within two (2) year's following initial shipment by Manufacturer. Such repair or replacement shall be free of charge except for freight and those parts such as media, chemicals, oil, grease, belts and like that are consumable under normal use.

2.0 PRODUCTS

2.1 MANUFACTURERS

2.1.1 Packaged Biological Wastewater Treatment Plant shall be manufactured by Aquapoint, LLC, New Bedford, Massachusetts or approved equal.

2.2 TANK CONSTRUCTION

2.2.1 All tank vessels shall be fabricated of one-fourth inch structural grade steel plated; ASTM A-36 ¼" minimum thickness joined by arc welding with fillets of adequate section for the joint involved. All walls shall be continuous and watertight and shall be supported by structural reinforcing members where required. Fabrication and erection shall conform to the appropriate requirements of "AISC Specification for Buildings". Connection shall conform to the requirements of the American Welding Society's Code and shall develop the full strength of the member. Aeration tank will have reinforcing members on 6'-0" maximum spacing and H-frame reinforcing will be provided on end walls and partition walls.

2.2.2 All piping shall be ASTM A-53 steel schedule 40 unless specified otherwise.

2.2.3 The systems shall be transported to the job site in one (1) section. The contractor shall be responsible for field assembly, including bolting when required.

2.3 COATING AND CORROSION CONTROL

2.3.1 All vessel surfaces to be painted shall be properly prepared in a workmanlike manner to obtain a smooth, clean and dry surface. All rust, dust, and mill scale as well as other extraneous matter shall be removed by means sandblast, interior (immersion) surfaces will receive "Near White Metal Blast": NACE 2, SSPC-SP10, or Sa 2 1/2, Is a method of preparing steel surfaces to be free of all visible oil, grease, dirt, dust, mill scale, rust and paint. Generally, evenly dispersed, very light shadows, streaks and discoloration caused by stains of rust, stains of mill scale, and stains of previously applied paint may remain on no more than 5% of the surface, All interior vessel surfaces shall be painted with two (2) coats of Tnemec series N-69 Hi-Build Epoxy, 12-16 mils total dry film thickness. All Exterior (non-immersion) vessel surfaces will receive "commercial blast" cleaning SSPC-

SP6, SSPC-SP6, or Sa 2, Is a method of preparing steel surfaces to be free of all visible oil, grease, dirt, dust, mill scale, rust and paint. Generally, evenly dispersed, very light shadows, streaks and discoloration caused by stains of rust, stains of mill scale, and stains of previously applied paint may remain on no more than 33% of the surface. Slight residues of rust and paint may also be left in the craters of pits if the original surface is pitted, and will be painted with two (2) coats of Tnemec series N-69 Hi-Build Epoxy, 12-16 mils TDFT.

2.4 FOUNDATION

2.4.1 A poured concrete foundation pad shall be constructed conforming to the project specifications. The slab must be level within tolerances of 1/2" per each 10'-0" of width and within 1/4" per each 10'-0" of length. The pad may be designed as a ballast to offset buoyant forces where required. The tank may be anchored to the pad using epoxy anchors and galvanized steel turnbuckles that connect to lug locations on the bottom side wall of the tank.

2.5 INLET CONNECTION

2.5.1 The influent connection shall be one, 4 inch diameter 150# standard flange. The inlet shall be located at the inlet endwall of the system.

2.6 INLET BAR SCREEN

2.6.1 A bar screen shall be provided at the influent port, to remove any unusually large solids from the incoming raw sewage. The bar screen shall be fabricated from one-half inch diameter bars spaced one-inch apart and arranged as shown on the drawings. The bars shall be sloped to permit easy cleaning of accumulating debris. A drying deck shall be furnished for drying this debris.

2.7 FLOW EQUALIZATION CHAMBER

2.7.1 An aerated flow equalization chamber shall be supplied to work in conjunction with the secondary treatment system. The purpose of the flow equalization tank is to reduce hydraulic surges on the biological process and prevent short circuiting and biomass washout. The influent shall enter the flow equalization tank by connection of a 4 inch diameter 150# flanged pipe connection.

2.7.2 The flow equalization chamber shall be provided as an integral part of the wastewater treatment system. The capacity of this chamber shall not be less than 7,500 gallons of working volume. A duplex set of grinder pumps shall be furnished and installed in the chamber for pumping the influent to the flow control box.

2.7.3 The flow proportioning facilities shall be provided at the top inside of the flow equalization chamber at the flow equalization pump discharge to reduce the pumping rate proportional to the system design flow. The chamber shall be equipped with an adjustable flat weir so that the excess pump surges shall overflow this chamber directly to the flow equalization tank. The corrected pumping flow shall pass over the "V" notch weir into the aeration chamber.

2.7.4 A duplex set of flow equalization pumps shall be provided within the flow equalization chamber and attached by piping and valving to the flow-proportioning chamber. The pumps shall be of the submersible grinder type.

2.7.5 Each pump shall be capable of delivering the following performance points, 30 gallons per minute at 15 ft. total dynamic head, the pump motor speed shall be 3450 RPM, 2 hp, 480 Volt 3, phase, 60 Hz. The pumps shall be Barnes pump model SGVF2042L.

2.7.6 The submersible grinder pumps shall be designed to reduce all material found in normal domestic and light industrial sewage, including plastics, rubber, sanitary napkins, and disposable diapers into a finely ground slurry. The resultant slurry is then pumped through small diameter piping into a gravity interceptor or treatment facility. The temperature limitation of the liquid being pumped is 104° F continuous, 160°F intermittent and shall be capable of running dry for extended periods.

2.7.7 Pump Construction: The volute, seal plates and motor housing shall be constructed of high quality ASTM A-48 class 30 cast iron. The pump (s) shall be powder coated with an epoxy primer and polyester top coat. All exposed hardware shall be 300 series stainless steel. Discharge connection shall be a standard 1.25 inch NPT in the vertical position using a threaded bolt on discharge flange.

2.7.8 The pump impeller shall be of the recessed vortex design. Pumps with standard centrifugal semi-open impeller designs shall not be acceptable. The impeller shall be of ASTM A-48 cast iron construction. The impeller shall be capable of being trimmed to meet specific performance characteristics.

2.7.9 The pump shall be a two bearing design consisting of an upper ball bearing carrying the thrust loads, and lower ball bearing for the purpose of carrying the thrust loads and radial loads. Sleeve bearings or ball bearings will not be considered equal. Bearings shall operate in an oil bath atmosphere for superior life. Permanently lubricated bearings are not acceptable.

2.7.10 The grinder mechanism shall be specifically designed for use in a grinder pump. The mechanism shall consist of an axial cutter that is locked for rotation by a shaft key. The cutter is fixed axially by a socket head cap screw. The cutter plate is held in place by a press fit. The entire cutting mechanism shall be recessed, protecting the mechanism. All grinding mechanism components, including both the cutter plate and radial cutter shall be constructed of 440C stainless steel hardened to a minimum Rockwell C55 and shall be finish ground for a fine cutting edge. The grinder shall be placed immediately below the pumping elements and shall be direct-driven by a single, one-piece, stainless steel motor shaft. The grinding assembly shall operate without objectionable noise or vibration over the entire range of recommended operating pressures. The grinder shall be constructed so as to eliminate clogging and jamming under all normal operating conditions including starting. In order to demonstrate adequate flow velocity and grinding capability, the grinder pump shall be capable of passing a series of stringy type solids (diapers, rags, feminine products, etc.) through the pump without roping or winding the material in or immediately below the pump suction.

2.7.11 The motor shall meet the performance requirements of a NEMA L speed- torque curve. The motor shall be designed to be non-overloading throughout the entire pump curve. The motor shall be constructed with the open windings operating in a sealed housing, which contains clean dielectric oil for heat dissipation from the windings and for lubrication of the bearings, making it capable of operating in a totally, partially, or non-shaft shall be of 416 stainless steel.

2.7.12 The pumps shall be equipped with 30 ft. of type SOW power cord. The power cord and motor shall be connected via quick disconnect pin terminals located within the motor housing. Pin receptacles shall be crimped and molded to the power cord in a PVC plug. The plug shall be secured with a stainless steel compression plate to prevent water from entering the motor housing and to provide strain relief at the point of cord entry. A polybutylene terephthalate terminal block with brass pin inserts shall connect the power cord leads with motor leads. The ground pin shall be longer than the other pins such that the ground connection is the first connection made and the last connection broken when the plug is inserted and removed, respectively. A Buna-N O-ring shall provide isolation sealing between terminal block and the motor housing. The plug assembly shall be guaranteed by the manufacturer to meet UL approval for submersion.

2.7.13 For three phase pumps, Protection against excessive temperature shall be provided by heat sensor thermostat attached to the stator windings and connected in series with the contactor coil in the control panel.

2.7.14 The unit shall utilize a double mechanical shaft seal arrangement and shall operate in an oil atmosphere. The materials of construction shall be silicon carbide for the rotating face and silicon carbide for the stationary face, lapped and polished to a tolerance of one light band, 300 series stainless steel hardware, and all elastomer parts to be Buna-N. The seal shall be commercially available and not a proprietary design of the manufacturer.

2.8 FLOW EQUALIZATION AIR SUPPLY BLOWER MOTOR UNIT

2.8.1 For supplying the air requirement of the flow equalization chamber, one (1) blower motor unit shall be furnished and installed at the location shown on the drawings. The units shall be completely factory built and tested before shipping to the project site. The blower shall be of the tri-lobe type design complete with the accessories described below.

2.8.2 The blower unit shall be capable of delivering 30 SCFM when operating at 5 PSI. The blower shall be manufactured by Kaeser Compressors, Fredericksburg, VA. The model number of the blower shall be BB52C.

2.8.3 The motor shall be 3 HP for operation on 480 Volt, 3 Phase, 60 Cycle Service, 3,600 RPM. It shall be of the TEFC (Totally enclosed fan cooled) type.

2.8.4 The blower shall be mounted on a steel base with weatherproof enclosure. The base structure shall be adequately reinforced to support the blower and motor unit.

2.8.5 For easy adjustment of the "V" belt drive connection between the blower and motor, the motor will be furnished with an adjustable motor mounting base.

2.8.6 The blower shall be fitted with a dry type polyester filter-silencer at the air intake. Furthermore, the blower discharge shall be fitted with a check valve, pressure relief valve, pressure gauge and a flexible rubber discharge coupling.

2.8.7 To help reduce blower vibration and noise, the blower motor enclosure shall be mounted on vibration dampeners and shall incorporate a discharge silencer.

2.9 FLOW EQUALIZATION ELECTRICAL CONTROL CONSOLE

2.9.1 An electrical control panel shall be installed within a NEMA 4X fiberglass weatherproof enclosure with a locking hasp. The control console shall be provided for mounting as indicated on the plans. Any exterior mounting hardware shall be stainless steel or other corrosion resistant material.

2.9.2 The control console (CP-1) shall be completely factory assembled and tested prior to shipment. The control console shall be furnished with all necessary controls for each pump and blower motor unit and associated plant equipment.

2.9.3 Controls shall be mounted to a removable sub-panel within the enclosure and shall be wired and spaced in accordance with the latest National Electrical Code. The control console shall be supplied with a properly sized magnetic-circuit breaker to act as the main disconnects for the control console. Magnetic starters with overload protection shall be supplied for all blower motor units. An electrical alternator shall be furnished to alternate the operation of each pump. The alternator shall be provided with a manual selector switch to allow manual selection of the lead pump if desired.

2.9.4 All wiring conductors within the control console shall be U.L. type THHN, stranded #14 AWG minimum, rated at 600 volts. Control wiring shall be numbered on each end.

2.9.5 Control panel and the electrical power service shall be furnished and installed by the purchaser. Wiring and conduit between the control panel and plant equipment shall be furnished by the manufacturer of the wastewater treatment plant. The panel may be detached for shipping. The main power supply shall be 480 Volt, 3 phase, 60 Cycle, 30 Amps. The control voltage shall be 120 Volt, 1 Phase.

2.9.6 Pump and blower level controls shall be of the direct acting machanical float type for complete automatic operation as follows:

<u>Low level Alarm float:</u> The low level alarm float will act as a redundant pump shut off and will activate an audio/visual alarm signal when the float switch is in the extended position (open circuit).

<u>Lead level float:</u> In the extended position the lead float switch shall create an open circuit and prevent operation of the pumps. When the circuit is closed the float switch shall allow activation of a fully adjustable timer and the pumps shall alternate between cycles, transferring wastewater to the downstream treatment reactor(s).

<u>Lag level float:</u> Upon closure the lag level float switch shall activate the second pump and the two pumps shall draw down the liquid in the equalization tank until the lag level float drops out again. Upon this occurrence, a

counter shall be triggered to alert the operator that a high level condition has occurred and that the timer "ON" setting may need adjusting.

High level float: The high level float switch shall activate the audio/visual alarm when the circuit is closed.

Blower timer enable float: The blower float switch shall prevent blower operation when in the extended position (open circuit). When tipped up (closed circuit) the float shall permit the blower to operate on a fully adjustable cycle timer.

2.9.7 The SJE PumpMasterPlus is a direct acting float switch, which contains a single pole mechanical switch which actuates when the float tipped up at 45 degrees and deactivates when the float is extended 45 degrees.

2.9.8 The power cord will consist of a type STO #12 conductors rated for up to 230 volts.

2.9.9 The float is a chemical resistant polypropylene casing with a firmly bonded electrical cable protruding. One end of the cable is permanently connected to the enclosed switch and the entire assembly is encapsulated to form a completely watertight and impact resistant unit.

2.9.10 Independent clamp on cable weights and a float bracket for mounting shall be provided for a complete level sensing assembly.

2.10 SLUDGE HOLDING/DIGESTER CHAMBER

2.10.1 An aerated aerobic digester chamber shall be provided as specified and shown on the plans. It shall be designed to hold a minimum of 4,000 gallons of sludge.

2.10.2 The digester chamber shall be constructed as an integral part of the wastewater treatment system and fabricated out of one-fourth inch steel plate. The chamber shall have the same protective coating as specified for the treatment plant. It shall also have the same structural requirements as the wastewater treatment plant.

2.10.3 The chamber shall be of the aerated type. Diffused air shall be supplied by the plant blower system. The diffusers shall be located parallel to and near the bottom of the tank. All piping and valves within the chamber shall be factory installed.

2.10.4 An airlift pump with vertically adjustable intake and air control valve shall be provided for the purpose of decanting supernatant from the aerobic digester. The airlift piping shall be schedule 40 painted steel piping, and neoprene bands shall isolate the piping from all steel surfaces. The pipe shall pivot on a swivel joint. The intake elevation adjustment shall allow the water level in the digester to be lowered a minimum of 48 inches.

2.10.5 An air distribution manifold shall be installed longitudinally on one side of the tank with diffuser drop assemblies connected thereto.

2.10.6 Each diffuser drop assembly shall be equipped with an air regulating and/or shutoff valve, a disconnecting union and a diffuser bar with non-clog air diffuser nozzles mounted thereon at approximately 70" centers. With this spacing, the airflow per diffuser shall range from 1 to 30 SCFM. This minimum air velocity shall be maintained to insure sufficient velocity for self-cleaning. The diffusers shall be parallel to and near the base of the vessel sidewall and at an elevation, which will provide the optimum diffusion and mixing of the vessel contents. The oxygen transfer capacity of each diffuser shall be such that an adequate supply of oxygen will be maintained in the aeration chamber to meet treatment requirements of the design sewage load.

2.10.7 The diffusers will be a Model EDI MaxAir™ as manufactured by Environmental Dynamics International, Columbia, Missouri. The diffusers will be manufactured to produce a double shear when air is released. The air is sheared as it discharges the air orifice of the air diffuser body and again as it crosses over the diaphragm baffle. The air check diaphragm located on top of the diffuser is molded directly to the diffuser body, preventing the cap from blowing off when excess CFM is delivered to the diffuser. The diffuser will be supplied with standard male pipe thread connections.

2.11 AERATION CHAMBER

2.11.1 There shall be supplied, an aeration chamber to work in conjunction with the clarifier chamber. The aeration chamber shall conform to the following specifications:

2.11.2 The aeration chamber shall be of sufficient capacity to provide a minimum of 24 hours retention of the average daily flow, and/or a minimum chamber volume of 15,000 gallons. The vessel shall be so shaped on each side to prevent sludge accumulation, to enhance rotation of the vessel contents, and to prevent scum and froth accumulation. To ensure maximum retention and eliminate short circuiting of raw sewage particles, the aeration chamber shall be constructed with air diffusers, placed longitudinally along one side of the chamber so as to, in conjunction with the flow control baffles, enhance the spiral rotation of the chamber contents. To ensure adequate circulation velocity, the proportion of the chamber width to depth, in the direction of rotation, shall not exceed 1.33 to 1. The velocity of rotation shall be sufficient to scour the bottom and prevent sludge filleting as well as to prevent the escape to the surface of minuscule air diffusion bubbles and by so causing their entrapment to provide maximum oxygenation efficiency.

2.11.3 An air distribution manifold shall be installed longitudinally on one side of the tank with diffuser drop assemblies connected thereto.

2.11.4 Each diffuser drop assembly shall be equipped with an air regulating and/or shutoff valve, a disconnecting union and a diffuser bar with non-clog air diffuser nozzles mounted thereon at approximately 70" centers. With this spacing, the airflow per diffuser shall range from 1 to 30 SCFM. This minimum air velocity shall be maintained to insure sufficient velocity for self-cleaning. The diffusers shall be parallel to and near the base of the vessel sidewall and at an elevation, which will provide the optimum diffusion and mixing of the vessel contents. The oxygen transfer capacity of each diffuser shall be such that an adequate supply of oxygen will be maintained in the aeration chamber to meet treatment requirements of the design sewage load.

2.11.5 The diffusers will be a Model EDI MaxAir™ as manufactured by Environmental Dynamics International, Columbia, Missouri. The diffusers will be manufactured to produce a double shear when air is released. The air is sheared as it discharges the air orifice of the air diffuser body and again as it crosses over the diaphragm baffle. The air check diaphragm located on top of the diffuser is molded directly to the diffuser body, preventing the cap from blowing off when excess CFM is delivered to the diffuser. The diffuser will be supplied with standard male pipe thread connections.

2.12 CLARIFIER CHAMBER

2.12.1 There shall be furnished a clarifier chamber to work in conjunction with the aeration chamber of that system. The clarifier shall conform to the following specifications:

2.12.2 The clarifier chamber shall be of such size as to provide a minimum of four (4) hours retention, based upon the same design flow rate governing the aeration chamber, and shall have proper baffling to prevent short circuiting and to provide maximum uniform retention. The clarifier inlet shall be baffled to prevent short-circuiting and provide maximum uniform solids settling area. The bottom of the chamber shall be formed into an inverted pyramidal hopper. The flat bottom area of the hopper shall not exceed one square foot. The slope of the hopper walls shall not be less than 1.7 vertical to 1.0 horizontal. Settled sludge shall be returned from the clarifier sludge hopper to the aeration chamber by the positive sludge return system, consisting of an airlift pump. The clarifier effluent shall pass over the edge of the baffled adjustable effluent weir into the effluent trough and then out of the chamber. The weir plate will be constructed of 1/8" galvanized steel and will be gasketed with 1/4" neoprene.

2.13 SLUDGE RECIRCULATION SYSTEM

2.13.1 There shall be installed within the clarifier chamber, a positive sludge recirculation system, consisting of one (1), 3 inch diameter airlift sludge return assembly, meeting the following specifications: The airlift pump system shall have the recirculation capacity ranging from 0% to 150% of the design flow. The airline supplying air to the pump shall be equipped with a gate valve varying the capacity of the pump. The airlift pump shall be firmly supported and shall be equipped with a clean-out plug to allow for easy cleaning and maintenance.

2.14 SCUM RECIRCULATION SYSTEM

2.14.1 There shall be installed within the clarifier chamber a positive scum and skimming recirculation system consisting of one (1), 2 inch diameter airlift skimming device meeting the following specifications: The skimming device shall be of the positive airlift pump type, located in a position to skim and return floating material to the aeration chamber. The airline supplying air to the skimming device shall be equipped with a gate valve to regulate the rate of return.

2.14.2 The scum intake shall be equipped with an adjustable assembly, which will enable exact positioning of the skimmer at water level without placing a hand under the water.

2.15 MAIN AERATION AIR SUPPLY BLOWER MOTOR UNITS

2.15.1 For supplying the air requirement of the main aeration chamber, sludge holding chamber, and airlift return pumps two (2) blower motor units shall be furnished and installed at the location shown on the drawings. The units shall be completely factory built and tested before shipping to the project site. The blower shall be of the tri-lobe type design complete with the accessories described below.

2.15.2 Each unit shall be capable of delivering 105 CFM when operating at 5 PSI. The blower shall be manufactured by Kaeser Compressors, Fredericksburg, VA. The model number of the blower shall be BB52C.

2.15.3 The motor shall be 5 HP for operation on 480 Volt, 3 Phase, 60 Cycle Service, 3,600 RPM. It shall be of the TEFC (Totally enclosed fan cooled) type.

2.15.4 The blower shall be mounted on a steel base with weatherproof enclosure. The base structure shall be adequately reinforced to support the blower and motor unit.

2.15.5 For easy adjustment of the "V" belt drive connection between the blower and motor, the motor will be furnished with an adjustable motor mounting base.

2.15.6 The blower shall be fitted with a dry type polyester filter-silencer at the air intake. Furthermore, the blower discharge shall be fitted with a check valve, pressure relief valve, pressure gauge and a flexible rubber discharge coupling.

2.15.7 To help reduce blower vibration and noise, the blower motor enclosure shall be mounted on vibration dampeners and shall incorporate a discharge silencer.

2.16 MAIN PROCESS ELECTRICAL CONTROL CONSOLE

2.16.1 An electrical control panel shall be installed within a NEMA 4X fiberglass weatherproof enclosure with a locking hasp. The control console shall be provided for mounting as indicated on the plans. Any exterior mounting hardware shall be stainless steel or other corrosion resistant material.

2.16.2 The control console (CP-2) shall be completely factory assembled and tested prior to shipment. The control console shall be furnished with all necessary controls for each pump and blower motor unit and associated plant equipment.

2.16.3 Controls shall be mounted to a removable sub-panel within the enclosure and shall be wired and spaced in accordance with the latest National Electrical Code. The control console shall be supplied with a properly sized magnetic-circuit breaker to act as the main disconnects for the control console. Magnetic starters with overload protection shall be supplied for all blower motor units. An electrical alternator shall be furnished to alternate the operation of each pump. The alternator shall be provided with a manual selector switch to allow manual selection of the lead blower if desired.

2.16.4 All wiring conductors within the control console shall be U.L. type THHN, stranded #14 AWG minimum, rated at 600 volts. Control wiring shall be numbered on each end.

2.16.5 Control panel and the electrical power service shall be furnished and installed by the purchaser. Wiring and conduit between the control panel and plant equipment shall be furnished by the manufacturer of the wastewater treatment plant. The panel may be detached for shipping. The main power supply shall be 480 Volt, 3 phase, 60 Cycle, 30 Amps. The control voltage shall be 120 Volt, 1 Phase.

2.17 DISINFECTION CHAMBER

2.17.1 A baffle type disinfection chamber shall be provided, constructed as an integral part of the wastewater treatment system. The chamber shall be installed immediately following the clarifier. The chamber shall be sized for a capacity of 313 gallons. Baffles shall be provided to eliminate short-circuiting and shall be designed to keep floating material from leaving the chamber.

2.17.2 The chamber shall have the same protective coating as specified for the wastewater treatment system. The chamber shall have the same structural requirements as the wastewater treatment plant. Sufficient flow baffles will be supplied to assure proper mixing of the chlorine solution with the plant effluent.

2.17.3 The chlorination equipment shall consist of solid chlorine tablet type feed, Norweco model XT-4000. The chlorinator shall have the capacity of disinfecting the effluent from the secondary treatment system. The chlorinator shall be mounted at the inlet end of the disinfection chamber at the location on the drawings.

2.17.4 The dechlorination equipment shall consist of solid chlorine tablet type feed, Norweco model XT-4000. The dechlorinator shall have the capacity of dechlorinating the effluent from the disinfection chamber. The dechlorinator shall be mounted at the inlet end of the dechlorination chamber at the location on the drawings.

2.18 EFFLUENT FLOW MEASUREMENTS

2.18.1 For measuring the flow rate through the wastewater treatment system, a flow-measuring weir shall be supplied within the chlorination chamber. The weir shall be a 30 degree "V" notch weir located at the outlet end of the disinfection tank.

2.18.2 For measuring the flow rate, an ultrasonic flowmeter with recorder shall be installed. The unit shall record, indicate, and totalize the flow through the wastewater treatment system, the system shall be mounted within a NEMA 4X polycarbonate enclosure with a locking hasp complete with a 100 watt thermostat controlled silicone rubber insulated general purpose heater interior mounted.

2.18.3 All components shall be pre-mounted and pre-wired with a circuit protection breaker powered from the main control console. The control console shall be provided for mounting as indicated on the plans. All exterior mounting hardware shall be stainless steel or other corrosion resistant material.

2.18.4 The proposed ultra-sonic flowmeter will have a range and blanking distance to 10'-0".

2.18.5 Components shall be pre-wired and pre-tested (calibrated) at the factory prior to shipment.

2.19 SERVICE WALKWAY

2.19.1 A service walkway of FRP material shall be provided for the service area only to service the plant equipment. The design of FRP products including connections shall be in accordance with governing building codes and standards as applicable.

2.19.2 Design live loads of FRP gratings and floor panels shall not be less than 100 PSF uniformly distributed unless specifically stated otherwise in drawings and/or supplementary conditions. Grating and floor panel deflection at the center of a simple span not to exceed 0.25”.

2.19.3 Structural members shall be designed to support all applied loads. Deflection in any direction shall not be more than L/180 of span for structural members. Connections shall be designed to transfer the loads.

2.19.4 The panels shall be 1-1/2 inches deep and sustain a deflection of no more than 0.25" under a uniform distributed load of 100 PSF for the span lengths shown on the plans.

2.19.5 The bearing bars shall be joined into panels by passing continuous length fiberglass pultruded cross rods through the web of each bearing bar. A continuous fiberglass pultruded bar shaped section shall be wedged between the two cross rod spacers mechanically locking the notches in the cross rod spacers to the web of the bearing bars. Continuous chemical bonding shall be achieved between the cross rod spacers and the bearing web and between the bar shaped wedge and the two cross rod spacers locking the entire panel together to give a panel that resists twist and prevents internal movement of the bearing bars.

2.19.6 The top surface of all panels shall have a non-skid grit affixed to the surface by an epoxy resin followed by a top coat of epoxy resin.

2.19.7 Panels shall be fabricated to the sizes shown on the drawings.

2.19.8 Bars that are to be exposed to UV shall be coated with polyurethane coating of a minimum thickness of 1 mil.

2.19.9 A 45 degree access stairway shall be provided leading to the walkway for the service area only to service the plant equipment. Stair treads shall be capable of withstanding a uniform load of 100 PSF or a concentrated load of 300 lbs. on an area of 4 sq. inches located in the center of the tread, whichever produces greater stress. Hand-railing shall be affixed to the stair runners, and shall be constructed from 1-1/2" OD schedule 40 aluminum pipe

2.19.10 Handrailing system to be constructed from 1-1/2" OD schedule 40 aluminum pipe. The railing shall consist of two rails supported by posts on spans not to exceed 6'-0" O.C. the top rail shall be 42" from the walkway surface, and the middle rail to be 18" below. Construction shall be welded, with two or four-bolt stanchion connection to the tank surface at each post. Provide for water to drain from the railing system hollow sections by drilling weep holes at bottom locations or other approved methods.

2.19.11 Install railing system and related components in strict accordance with manufacturer's printed installation instructions and project shop drawings. Preassemble railing system, including posts, in easy to lift sections whenever possible. Align rails so that variations from level for horizontal members, and from parallel with rake of steps and ramps for sloping members, do not exceed 1/4 inch in 12 feet.

3.0 EXECUTION

3.1 DELIVERY INSTRUCTIONS

3.1.1 In almost every case, special lowboy trucks do shipment of your treatment system. When your plant is shipped by our truck, delivery will be made directly to the job site. The field contractor must furnish the equipment necessary to unload the plant and set it on the foundation pad.

3.1.2 When the plant arrives at the job site, the owner's contractor should have available the necessary equipment to unload and set the vessel on the foundation pad. A crane of adequate size is the easiest and fastest method. Lifting lugs are provided on the vessel to simplify handling. After setting the plant in position, a check should be made to see that it is level, and in the correct position.

3.1.3 Our package steel treatment systems shall be completely assembled units and are shipped as a unit where shipping height limitations permit this procedure. If a portion of the equipment must be removed to meet shipping height limitations, this equipment will be packaged separately at the factory for field assembly. This equipment and tankage should be field assembled and installed by the owner's contractor in the field.

3.1.4 Please refer to the pre-plant delivery instructions.

3.2 PLANT START-UP

3.2.1 At the time the wastewater treatment system is filled with water or sewage, and all power connections have been completed, and all equipment is approved for service, the contractor shall provide the services of a

representative of the manufacturer who shall instruct the owner's representative in the proper operation and maintenance of the wastewater treatment system, including instructions in conducting all required operational tests. The manufacturer's representative shall furnish at this time, a service manual on the equipment installed within the wastewater treatment system.

3.3 FIELD CONTRACTOR RESPONSIBILITY

3.3.1 The field contractor shall perform and/or make the following arrangements:

3.3.2 Field unloading and setting of the wastewater treatment plant on its foundation pad, anchoring in position as defined by the contract specifications.

3.3.3 Assemble into position, at the location shown on the plans, the ancillary equipment, which has been disconnected at the factory for shipping purposes.

3.3.4 Interconnection of piping and wiring which may have been disconnected at the factory for shipping purposes.

3.3.5 Tie-in of all piping, power and wiring connections to site utilities and electrical cable entries into control panels. The power required at power block or main circuit breaker is 480 Volt, 3 Phase, 60 Hz., 30 amp service for the flow equalization chamber and 30 amp for the main aeration blower control panel

3.3.6 Furnish foundation pad to set the system on.

3.3.7 Attach system to foundation pad by anchoring including supply of anchoring method.

3.3.8 Touch-up painting of those areas damaged during installation.

3.3.9 Install shipping drain plugs and fill tankage with potable/non-potable water for readiness of start-up operations.

END OF SECTION

I-10 Jackson County Welcome Center, known as Federal Aid Project No. STBG-0010-01(180) / 109171301 in Jackson County.

Line No.	Item Code	Adj Code	Quantity	Units	Description [Fixed Unit Price]
				Roadway Items	
0010	201-B001		26	Acre	Clearing and Grubbing
0020	202-B007		23,807	Square Yard	Removal of Asphalt Pavement, All Depths
0030	202-B038		14	Each	Removal of Building Picnic Shelter
0040	202-B038		1	Each	Removal of Building Security Building
0050	202-B038		1	Each	Removal of Building Welcome Center
0060	202-B063		314	Square Yard	Removal of Concrete Paved Ditch
0070	202-B073		8,111	Square Yard	Removal of Concrete Pavement, All Depths
0080	202-B080		3,425	Square Yard	Removal of Concrete Sidewalk
0090	202-B089		2,645	Linear Feet	Removal of Curb &/or Curb and Gutter, All Types
0100	202-B126		3,210	Linear Feet	Removal of Fence, All Types
0110	202-B164		11	Each	Removal of Inlet and Junction Box, All Types & Sizes
0120	202-B178		43	Each	Removal of Low Mast Lighting Assembly and Foundation
0130	202-B180		9	Each	Removal of Manhole
0140	202-B191		404	Linear Feet	Removal of Pipe, 8" And Above
0150	202-B215		65	Each	Removal of Sign Including Post & Footing
0160	202-B242		1	Each	Removal of Treatment Plant Sturctures and Appurtenances
0170	203-A001	(E)	8,750	Cubic Yard	Unclassified Excavation, FM, AH
0180	203-EX012	(E)	2,000	Cubic Yard	Borrow Excavation, AH, FME, Class B3
0190	203-EX018	(E)	34,550	Cubic Yard	Borrow Excavation, AH, FME, Class B7-6
0200	203-G001	(E)	2,050	Cubic Yard	Excess Excavation, FM, AH
0210	203-I002		8,265	Square Yard	Site Grading
0220	206-A001	(S)	1,800	Cubic Yard	Structure Excavation
0230	206-B001	(E)	700	Cubic Yard	Select Material for Undercuts, Contractor Furnished, FM
0240	209-A004		41,840	Square Yard	Geotextile Stabilization, Type V , Woven
0250	211-A001		82,210	Square Yard	Topsoil for Slope Treatment, From Right-of-Way
0260	211-B001	(E)	1,688	Cubic Yard	Topsoil for Slope Treatment, Contractor Furnished
0270	211-C001	(E)	195	Cubic Yard	Topsoil for Plant Holes, Contractor Furnished
0280	213-C001		9	Ton	Superphosphate
0290	216-B002		23,891	Square Yard	Solid Sodding, Centipede
0300	219-A001		1,665	Thousand Gallon	Watering [$20.00]
0310	220-A001		17	Acre	Insect Pest Control [$30.00]
0320	221-A001	(S)	31	Cubic Yard	Concrete Paved Ditch
0330	223-A001		62	Acre	Mowing [$70.00]

Line No.	Item Code	Adj Code	Quantity	Units	Description [Fixed Unit Price]
0340	225-A001		17	Acre	Grassing
0350	225-B001		9	Ton	Agricultural Limestone
0360	225-C001		34	Ton	Mulch, Vegetative Mulch
0370	226-A001		12	Acre	Temporary Grassing
0380	227-A001		5	Acre	Hydroseeding
0390	230-A036		167	Each	Shrub Planting, Dwarf Maiden Grass 1 Gallon
0400	230-A041		131	Each	Shrub Planting, Dwarf Wax Myrtle 3 Gallon
0410	230-A049		58	Each	Shrub Planting, Francis Mason Abelia 3 Gallon
0420	230-A100		88	Each	Shrub Planting, Parsons Juniper 3 Gallon
0430	230-A102		162	Each	Shrub Planting, Pink Creeping Phlox 1 Gallon
0440	230-A119		127	Each	Shrub Planting, Saw Palmetto 3 Gallon
0450	230-A121		74	Each	Shrub Planting, Shi-Shi Gashira Camellia 3 Gallon
0460	230-A126		265	Each	Shrub Planting, Spirea 'Anthony Waterer' 1 Gallon
0470	230-A142		84	Each	Shrub Planting, Wheeler's Dwarf Pittosporum 3 Gallon
0480	230-A143		11	Each	Shrub Planting, Formosa Azalea 3 Gallon
0490	230-A144		211	Each	Shrub Planting, Blue Cascade Distylium 3 Gallon
0500	230-A145		18	Each	Shrub Planting, Oakleaf Hydrangea 3 Gallon
0510	230-A146		87	Each	Shrub Planting, Autumn Fern 1 Gallon
0520	230-A147		50	Each	Shrub Planting, Cast Iron Plant 3 Gallon
0530	230-A148		36	Each	Shrub Planting, Sand Cordgrass 1 Gallon
0540	230-A149		190	Each	Shrub Planting, Little Bluestem 1 Gallon
0550	230-A150		127	Each	Shrub Planting, Bicolor African Iris 1 Gallon
0560	230-A151		111	Each	Shrub Planting, Copper Iris 1 Gallon
0570	230-A152		156	Each	Shrub Planting, Giant Blue Iris 1 Gallon
0580	230-A153		40	Each	Shrub Planting, Evergreen Daylily 1 Gallon
0590	230-A154		22	Each	Shrub Planting, Variegated Hosta 1 Gallon
0600	230-A155		37	Each	Shrub Planting, Beautyberry 3 Gallon
0610	230-A156		5	Each	Shrub Planting, Coral Drift Rose
0620	230-B006		26	Each	Tree Planting, Bald Cypress 65 Gallon
0630	230-B015		4	Each	Tree Planting, Chaste Tree 30 Gallon
0640	230-B039		3	Each	Tree Planting, Flowering Dogwood 30 Gallon
0650	230-B050		57	Each	Tree Planting, Live Oak 65 Gallon
0660	230-B057		21	Each	Tree Planting, Nutall Oak 65 Gallon

Line No.	Item Code	Adj Code	Quantity	Units	Description [Fixed Unit Price]
0670	230-B064		5	Each	Tree Planting, Redbud 30 Gallon
0680	230-B067		4	Each	Tree Planting, Savannah Holly 45 Gallon
0690	230-B078		12	Each	Tree Planting, Southern Wax Myrtle 30 Gallon
0700	230-B084		31	Each	Tree Planting, Sweetbay Magnolia 45 Gallon
0710	230-B104		15	Each	Tree Planting, Black Gum 65 Gallon
0720	230-B105		34	Each	Tree Planting, Bosque Elm 65 Gallon
0730	230-B106		1	Each	Tree Planting, Japanese Maple 45 Gallon
0740	230-B107		37	Each	Tree Planting, Longleaf Pine 30 Gallon
0750	230-B108		5	Each	Tree Planting, Bottlebrush 15 Gallon
0760	230-B109		9	Each	Tree Planting, Buttonbush 7 Gallon
0770	230-D001		33,814	Square Feet	Bed Preparation
0780	233-A003		313	Cubic Yard	Tree Bark Mulch, Type III
0790	233-C005		35	Cubic Yard	Straw Mulch, Class II
0800	237-A002		1,700	Linear Feet	Wattles, 20"
0810	246-B001		50	Each	Rockbags
0820	249-A001		75	Ton	Riprap for Erosion Control
0830	249-A001		53	Ton	Riprap for Erosion Control Washed Gravel for Landscaped Areas
0840	406-D001		1,131	Square Yard	Fine Milling of Bituminous Pavement, All Depths
0850	407-A001	(A2)	2,297	Gallon	Asphalt for Tack Coat
0860	501-A004	(C)	2,816	Square Yard	10" Reinforced Cement Concrete Pavement, Broom Finish
0862	501-B001	(C)	22,810	Square Yard	10" Plain Cement Concrete Pavement, Broom Finish
0870	501-D001		338	Linear Feet	Expansion Joints, With Dowels
0880	501-F001		76	Linear Feet	Concrete Lug Anchors
0890	602-A001	(S)	2,012	Pounds	Reinforcing Steel
0900	603-CA012	(S)	656	Linear Feet	18" Reinforced Concrete Pipe, Class III, Rubber Type Gaskets
0910	603-CA027	(S)	240	Linear Feet	24" Reinforced Concrete Pipe, Class III, Rubber Type Gaskets
0920	603-CB003	(S)	10	Each	18" Reinforced Concrete End Section
0930	603-CB004	(S)	6	Each	24" Reinforced Concrete End Section
0940	603-CE001	(S)	72	Linear Feet	18" x 11" Concrete Arch Pipe, Class A III
0950	603-CE003	(S)	312	Linear Feet	22" x 13" Concrete Arch Pipe, Class A III, Flexible Plastic Gaskets
0960	603-CE014	(S)	72	Linear Feet	36" x 23" Concrete Arch Pipe, Class A III, Flexible Plastic Gaskets
0970	603-CF002	(S)	4	Each	22" x 13" Concrete Arch Pipe End Section
0980	603-CF004	(S)	2	Each	36" x 23" Concrete Arch Pipe End Section
0990	603-PE001	(S)	571	Linear Feet	12" Corrugated Polyethylene Pipe

Line No.	Item Code	Adj Code	Quantity	Units	Description [Fixed Unit Price]
1000	603-PE003	(S)	704	Linear Feet	18" Corrugated Polyethylene Pipe
1010	603-PE009	(S)	176	Linear Feet	8" Corrugated Polyethylene Pipe
1020	604-A001		79	Pounds	Castings
1030	604-B001		1,776	Pounds	Gratings
1040	607-B026		874	Linear Feet	72" Type I Chain Link Fence, Class I , With Top Guard
1050	607-B027		2,940	Linear Feet	72" Type I Chain Link Fence, Class II
1060	607-G061		1	Each	Gate, 12' x 6' Double Chain Link
1070	607-G098		1	Each	Gate, 16' x 6' Double Chain Link with Top Guard
1080	607-P1018		347	Each	Line Post, 9' x 2" Galvanized Steel
1090	607-P2013		49	Each	Brace Post, 10' x 2 1/2" Galvanized Steel
1100	607-P3009		4	Each	Gate Post, 9' x 3 1/2" Galvanized Steel
1110	608-A001	(S)	4,245	Square Yard	Concrete Sidewalk, Without Reinforcement
1120	609-B002	(S)	283	Linear Feet	Concrete Curb, Header
1130	609-C003	(S)	2,212	Linear Feet	Concrete Integral Curb, Type 3
1140	609-D001	(S)	1,593	Linear Feet	Combination Concrete Curb and Gutter Type 1
1150	609-D004	(S)	207	Linear Feet	Combination Concrete Curb and Gutter Type 2 Modified
1160	609-D013	(S)	2,474	Linear Feet	Combination Concrete Curb and Gutter Type 3B
1170	612-A001		15	Cubic Yard	Flowable Fill, Excavatable
1180	616-A001	(S)	748	Square Yard	Concrete Median and/or Island Pavement, 10-inch
1190	619-A5001		1,480	Linear Feet	Temporary Traffic Stripe, Detail
1200	619-D1001		52	Square Feet	Standard Roadside Construction Signs, Less than 10 Square Feet
1210	619-D2001		304	Square Feet	Standard Roadside Construction Signs, 10 Square Feet or More
1220	619-F1001		1,480	Linear Feet	Concrete Median Barrier, Precast
1230	619-F2001		1,480	Linear Feet	Remove and Reset Concrete Median Barrier, Precast
1240	619-G4005		24	Linear Feet	Barricades, Type III, Single Faced
1250	619-G5001		31	Each	Free Standing Plastic Drums
1260	619-G7001		2	Each	Warning Lights, Type "B"
1270	619-G8001		3	Each	Warning Lights, Type "C"
1280	620-A001		1	Lump Sum	Mobilization
1290	630-A001		204	Square Feet	Standard Roadside Signs, Sheet Aluminum, 0.080" Thickness
1300	630-A003		62	Square Feet	Standard Roadside Signs, Sheet Aluminum, 0.125" Thickness
1310	630-A005		121	Square Feet	Standard Roadside Signs, Sheet Aluminum, 0.1" Thickness
1320	630-B002		100	Square Feet	Interstate Directional Signs, Bolted Extruded Aluminum Panels, Ground Mounted

Line No.	Item Code	Adj Code	Quantity	Units	Description [Fixed Unit Price]
1330	630-C001		299	Linear Feet	Square Tube Posts, 4.0 lb/ft
1340	630-C004		202	Linear Feet	Square Tube Posts, 9.0 lb/ft
1350	630-C005		533	Linear Feet	Square Tube Posts, 2.0 lb/ft
1360	630-C1001		56	Linear Feet	Square Post Inner Sleeve
1370	699-A001		1	Lump Sum	Roadway Construction Stakes
1380	815-A002	(S)	60	Ton	Loose Riprap, Size 100
1390	815-E001	(S)	85	Square Yard	Geotextile under Riprap
1400	815-E001	(S)	226	Square Yard	Geotextile under Riprap for ditch in Landscape Area
1410	907-234-A001		6,400	Linear Feet	Temporary Silt Fence
1420	907-234-D001		12	Each	Inlet Siltation Guard
1430	907-234-E001		12	Each	Reset Inlet Siltation Guard
1440	907-240-A001		938	Square Yard	Interlocking Flexible Block Erosion Control System
1450	907-242-A001		1	Lump Sum	Construction of Welcome Center Facility
1460	907-242-PP003		1	Each	Installation of Irrigation System Pump
1470	907-260-A005		1	Lump Sum	Utility Work - Sewer,
1480	907-262-A007		1	Lump Sum	Utility Work - Water,
1490	907-282-A068		16	Each	Sprinkler Head, 1812-RVAN-18
1500	907-282-A069		36	Each	Sprinkler Head, 1812-RVAN-24
1510	907-282-A070		11	Each	Sprinkler Head, 1812-RVAN-24-360
1520	907-282-A071		3	Each	Sprinkler Head, 1812-RVAN-LCS
1530	907-282-A072		2	Each	Sprinkler Head, 1812-RVAN-RCS
1540	907-282-A073		1	Each	Sprinkler Head, 1812-RVAN-SST
1550	907-282-A074		162	Each	Sprinkler Head, 1812-RVAN-14
1560	907-282-B001		300	Linear Feet	Piping, 1 1/2" Diameter
1570	907-282-B003		4,400	Linear Feet	Piping, 1" Diameter
1580	907-282-B006		1,975	Linear Feet	Piping, 2" Diameter
1590	907-282-C003		500	Linear Feet	Sleeves, 4"
1600	907-282-D001		13,950	Linear Feet	Valve Control Wire
1610	907-282-G008		1	Each	Electric Controller, 16 Station
1620	907-282-H001		3	Each	Electric Control Valve, 1 1/2"
1630	907-282-H002		8	Each	Electric Control Valve, 1"
1640	907-282-H003		2	Each	Electric Control Valve, 2"
1650	907-282-J003		5	Each	Isolation Valve, 2"
1660	907-282-J003		1	Each	Isolation Valve, 2" Master Valve

Line No.	Item Code	Adj Code	Quantity	Units	Description [Fixed Unit Price]
1670	907-290-A001		1	Each	Flagpole
1680	907-403-A002	(BA1)	2,038	Ton	12.5-mm, MT, Asphalt Pavement
1690	907-403-A005	(BA1)	2,815	Ton	19-mm, MT, Asphalt Pavement
1700	907-403-A014	(BA1)	1,313	Ton	9.5-mm, MT, Asphalt Pavement
1710	907-601-B001	(S)	38	Cubic Yard	Class "B" Structural Concrete, Minor Structures
1720	907-604-PP002	(S)	37	Linear Feet	8" Trench Drain, Per Plans Inline Drain
1730	907-604-PP002	(S)	56	Linear Feet	8" Trench Drain, Per Plans Slot Drain
1740	907-607-PP005		1	Each	Cantilever Gate, Per Plans Tubular Steel Gate
1750	907-608-C001		282	Square Feet	Detectable Warning Panels
1760	907-608-D002	(S)	4,070	Square Feet	Stamped and Colored Concrete Sidewalk
1770	907-616-C001	(S)	2,833	Square Feet	Colored and Imprinted Concrete Median and Island Pavement, 10-inch Thickness
1780	907-618-A001		1	Lump Sum	Maintenance of Traffic
1790	907-619-E3001		1	Each	Changeable Message Sign
1800	907-626-C011		2,447	Linear Feet	6" Thermoplastic Double Drop Edge Stripe, Continuous White
1810	907-626-F004		1,672	Linear Feet	6" Thermoplastic Double Drop Edge Stripe, Continuous Yellow
1820	907-626-G003		670	Linear Feet	Thermoplastic Detail Stripe, Blue-ADA
1830	907-626-G006		5,376	Linear Feet	Thermoplastic Double Drop Detail Stripe, White
1840	907-626-G007		422	Linear Feet	Thermoplastic Double Drop Detail Stripe, Yellow
1850	907-626-H001		6	Each	Thermoplastic Legend, Blue-ADA Handicap Symbol
1860	907-626-H006		55	Square Feet	Thermoplastic Double Drop Legend, White
1870	907-626-H007		456	Linear Feet	Thermoplastic Double Drop Legend, White
1880	907-627-K001		49	Each	Red-Clear Reflective High Performance Raised Markers
1890	907-628-E002		1,144	Linear Feet	6" Cold Plastic Detail Stripe, Blue-ADA
1900	907-628-H004		2	Each	Cold Plastic Legend, Blue-ADA Handicap Symbol
1910	907-628-K003		9,201	Linear Feet	High Performance Cold Plastic Detail Stripe, White
1920	907-628-K004		1,672	Linear Feet	High Performance Cold Plastic Detail Stripe, Yellow
1930	907-628-L003		240	Linear Feet	High Performance Cold Plastic Legend, White
1940	907-628-L004		125	Square Feet	High Performance Cold Plastic Legend, White
1950	907-630-O001		2	Each	Remove and Reset Sign Assembly
			ALTERNATE GROUP AA NUMBER 1		
1960	304-F001	(GT)	18,838	Ton	3/4" and Down Crushed Stone Base
			ALTERNATE GROUP AA NUMBER 2		
1970	304-F002	(GT)	18,838	Ton	Size 610 Crushed Stone Base
			ALTERNATE GROUP AA NUMBER 3		

Line No.	Item Code	Adj Code	Quantity	Units	Description [Fixed Unit Price]
1980	304-F003	(GT)	18,838	Ton	Size 825B Crushed Stone Base

SUMMARY OF REVISIONS

REV. NO.	DATE	1ST ORDER	ADDENDUM	2ND ORDER	INITIALS	SHEET ID.	DESCRIPTION
1	2/20/2026	X			PF	SQ-1, SQ-2, SQ-3, SQ-4, SQ-5, WK-5A, MCD-8, UTIL-3, UTIL-19, VS-1	Update Pay Items and Footnotes, Revise Dimensions, Revise Pay Item Note, Add Lighting Protection Details, Update Vegetation Schedule
2	2/24/2026	X			PF	SQ-1, SQ-2 IRR-1, IRR-3, IRR-4	Update Pay Items and Footnotes, Revise Legend Notes, Revised Detail Note
3	4/17/2026		X		PF	SQ-1, SQ-2, SQ-3, SQ-4, SQ-5 PLN-8 UTIL-1 UTIL-3 UTIL-5 UTIL-6 UTIL-8 UTIL-10 UTIL-12 UTIL-15	Update Pay Items and Footnotes, Revised Fence Note Added New Water Service and Note Revised Demolition Note Revised Pipe Material Note Revised Chlorine System Revised Chlorine System Added 3 Water Service Lines & Notes Added Water Service Line to Plan and Profile Added Pipe Trench Detail
					ADP	FP000 FP100 FP200 P001 P100 P600	Updated dry pipe air compressor schedule; Added note requiring all equipment to be BABA compliant. Added fire protection note and added a floor mounted air compressor. Replaced dry pipe air compressor detail with tank mounted type. Added ground hydrants to plumbing site plan Added ground hydrants and water lines to floor plan, added new keynote Updated Schedules; Added note requiring all equipment to be BABA compliant.
					JFC	M100 M200 M500 M501	Removed MSAH-1C and MSAH-3A; changed MSAH-3B name to MSAH-3; added MSHP-4 and MSAH-4 to serve Storage 122. Removed MSAH-1C and MSAH-3A; changed MSAH-3B name to MSAH-3; added MSHP-4 and MSAH-4 to serve Storage 122; Updated refrigerant and condensate piping. Updated Ductless Minisplit Indoor Unit Schedule and Ductless Minisplit Outdoor unit schedule; Added note requiring all equipment to be BABA compliant. Added note requiring all equipment to be BABA compliant.
					CAB	E001 E200 E400 E401 E405 E501 E504	Update General Notes, Site Keyed Notes, Adjusted #17 Fixtures and Count, Added #25 Fixtures Update MSHP-3, MSHP-1, added air compressor AC-1, MSHP-4, MSAH-3, MSAH-4, MSAH-1A, MSAH-1B Relocate Conduit Underground Detail Update pole base and bollard fixture details Update WH-5 circuit, added MSAH-3, MSAH-4, MSAH-1A, MSAH-1B Update Lighting Fixture Schedule and Power Connection Schedule Update Panel Schedules

ADDENDUM

DESIGNED BY: GEOFFREY CROSBY
DETAILED BY: PATRICK FURR
CHECKED BY: GABE FAGGARD
DATE: 01/30/2026

FMS CON: 109171-301000
PROJECT NO.: STBG-0010-01(180)
COUNTY: JACKSON

SUMMARY OF REVISIONS

SHEET ID
REV-1

SHEET NO.
4

4/20/2026 12:50 PM _revisions.dwg

SUMMARY OF QUANTITIES (SHEET 1)

PAY ITEM NO.	PAY ITEM	UNIT	JACKSON : 109171-301000 Prelim	Final	
201-B001	Clearing and Grubbing	ACRE	26		1
202-B007	Removal of Asphalt Pavement, All Depths	SY	23,807		8 9
202-B038	Removal of Building Welcome Center	EA	1		10
202-B038	Removal of Building Picnic Shelter	EA	14		10
202-B038	Removal of Building Security Building	EA	1		10
202-B063	Removal of Concrete Paved Ditch	SY	314		
202-B073	Removal of Concrete Pavement, All Depths	SY	8,111		8
202-B080	Removal of Concrete Sidewalk	SY	3,425		8
202-B089	Removal of Curb &/or Curb and Gutter, All Types	LF	2,645		8
202-B126	Removal of Fence, All Types	LF	3,210		11
202-B164	Removal of Inlet and Junction Box, All Types & Sizes	EA	11		
202-B178	Removal of Low Mast Lighting Assembly and Foundation	EA	43		
202-B180	Removal of Manhole	EA	9		
202-B191	Removal of Pipe, 8" And Above	LF	404		
202-B215	Removal of Sign Including Post & Footing	EA	65		
202-B242	Removal of Treatment Plant Sturctures and Appurtenances	EA	1		12 1
203-A001	Unclassified Excavation, FM, AH	CY	8,750		7
203-EX012	Borrow Excavation, AH, FME, Class B3	CY	2,000		7
203-EX018	Borrow Excavation, AH, FME, Class B7-6	CY	34,550		7
203-G001	Excess Excavation, FM, AH	CY	2,050		7
203-I002	Site Grading	SY	8,265		5
206-A001	Structure Excavation	CY	1,800		7
206-B001	Select Material for Undercuts, Contractor Furnished, FM	CY	700		7
209-A004	Geotextile Stabilization, Type V , Woven	SY	41,840		
211-A001	Topsoil for Slope Treatment, From Right-of-Way	SY	82,210		2
211-B001	Topsoil for Slope Treatment, Contractor Furnished	CY	1,688		2
211-C001	Topsoil for Plant Holes, Contractor Furnished	CY	195		
213-C001	Superphosphate	TON	9		
216-B002	Solid Sodding, Centipede	SY	23,891		
219-A001	Watering	KGAL	1,665		4
220-A001	Insect Pest Control	ACRE	17		
221-A001	Concrete Paved Ditch	CY	31		6
223-A001	Mowing	ACRE	62		3
225-A001	Grassing	ACRE	17		
225-B001	Agricultural Limestone	TON	9		
225-C001	Mulch, Vegetative Mulch	TON	34		
226-A001	Temporary Grassing	ACRE	12		
227-A001	Hydroseeding	ACRE	5		
230-A036	Shrub Planting, Dwarf Maiden Grass 1 Gallon	EA	167		
230-A041	Shrub Planting, Dwarf Wax Myrtle 3 Gallon	EA	131		
230-A049	Shrub Planting, Francis Mason Abelia 3 Gallon	EA	58		
230-A100	Shrub Planting, Parsons Juniper 3 Gallon	EA	88		
230-A102	Shrub Planting, Pink Creeping Phlox 1 Gallon	EA	162		
230-A119	Shrub Planting, Saw Palmetto 3 Gallon	EA	127		
230-A121	Shrub Planting, Shi-Shi Gashira Camellia 3 Gallon	EA	74		
230-A126	Shrub Planting, Spirea 'Anthony Waterer' 1 Gallon	EA	265		

REVISIONS	
DATE	BY
1 2/23/26	PF
2 2/24/26	PF
3 4/17/26	PF

1. CLEARING DEBRIS TO BE MULCHED ON SITE AS DIRECTED BY THE ENGINEER AND USED FOR TEMPORARY GROUND STABILIZATION.
2. TOPSOIL PLATING SHALL BE 4" THICKNESS (MINUMUM) ON SLOPES 3:1 OR FLATTER. TOPSOIL SHALL BE DRESSED VERTICALLY WITH A BULLDOZER OR OTHER TRACKED EQUIPMENT.
3. ESTIMATED FREQUENCY 2 MOWINGS PER YEAR OR AS DIRECTED BY THE ENGINEER.
4. ALSO TO BE USED IN THE PLANTING AND ESTABLISHING OF SOLID SOD.
5. ESTIMATED QUANTITY, ACTUAL QUANTITY AS DIRECTED BY THE ENGINEER.
6. INCLUDES THE QUANTITY FOR APRONS AND FLUMES:CONCRETE PAVED DITCH, 3.365 CY; INLET FLUME, 15.725 CY; INLET APRONS, 7.121 CY; PIPE APRONS, 1.687 CY; TYPC C PAVED FLUMES, 2.955 CY
7. QUANTITY ROUNDED UP TO NEAREST 50 OR 100 UNITS.
8. SAW CUTS SHALL BE FULL DEPTH AND THE COST OF WHICH SHALL BE ABSORBED IN OTHER ITEMS BID.
9. ASPHALT PAVEMENT SHALL BE REMOVED IN A MANNER TO PROVIDE UNIFORM EDGES AND JOINTS FOR INSTALLATION OF NEW PAVEMENT STRUCTURE.
10. INCLUDES REMOVAL OF STRUCTURE, COMPONENTS WITHIN THE STRUCTURE, FOUNDATION, AND UTILITY CONNECTIONS.
11. INCLUDES GATES AND FOOTINGS.
12. (1) REFER TO WKG. NO. UTIL-3. CONTRACTOR TO COORDINATE REMOVAL WITH JACKSON COUNTY UTILITY AUTHORITY. CONTRACTOR TO DISPOSE OF DEMOLISHED MATERIALS AS PER MISSISSIPPI DEPARTMENT OF ENVIRONMENTAL QUALITY AND MISSISSIPPI DEPARTMENT OF HEATH.

JEFFREY PAUL CROSBY PROFESSIONAL ENGINEER 19294 STATE OF MISSISSIPPI
01/30/2026

ADDENDUM

DESIGNED BY: GEOFFREY CROSBY
DETAILED BY: PATRICK FURR
CHECKED BY: GABE FAGGARD
DATE: 01/30/2026

FMS CON: 109171-301000
PROJECT NO.: STBG-0010-01(180)
COUNTY: JACKSON

SUMMARY OF QUANTITIES

SHEET ID
SQ-1

SHEET NO.
11

REVISIONS		
	DATE	BY
1	2/23/26	PF
2	2/24/26	PF
3	4/17/26	PF

SUMMARY OF QUANTITIES (SHEET 2)

PAY ITEM NO.	PAY ITEM	UNIT	JACKSON : 109171-301000 Prelim	Final	
230-A142	Shrub Planting, Wheeler's Dwarf Pittosporum 3 Gallon	EA	84		1
230-A143	Shrub Planting, Formosa Azalea 3 Gallon	EA	11		1
230-A144	Shrub Planting, Blue Cascade Distylium 3 Gallon	EA	211		1
230-A145	Shrub Planting, Oakleaf Hydrangea 3 Gallon	EA	18		1
230-A146	Shrub Planting, Autumn Fern 1 Gallon	EA	87		1
230-A147	Shrub Planting, Cast Iron Plant 3 Gallon	EA	50		1
230-A148	Shrub Planting, Sand Cordgrass 1 Gallon	EA	36		1
230-A149	Shrub Planting, Little Bluestem 1 Gallon	EA	190		1
230-A150	Shrub Planting, Bicolor African Iris 1 Gallon	EA	127		1
230-A151	Shrub Planting, Copper Iris 1 Gallon	EA	111		1
230-A152	Shrub Planting, Giant Blue Iris 1 Gallon	EA	156		1
230-A153	Shrub Planting, Evergreen Daylily 1 Gallon	EA	40		1
230-A154	Shrub Planting, Variegated Hosta 1 Gallon	EA	22		1
230-A155	Shrub Planting, Beautyberry 3 Gallon	EA	37		1
230-A156	Shrub Planting, Coral Drift Rose 1 Gallon	EA	5		1
230-B006	Tree Planting, Bald Cypress 65 Gallon	EA	26		
230-B015	Tree Planting, Chaste Tree 30 Gallon	EA	4		
230-B039	Tree Planting, Flowering Dogwood 30 Gallon	EA	3		
230-B050	Tree Planting, Live Oak 65 Gallon	EA	57		
230-B057	Tree Planting, Nutall Oak 65 Gallon	EA	21		
230-B064	Tree Planting, Redbud 30 Gallon	EA	5		
230-B067	Tree Planting, Savannah Holly 45 Gallon	EA	4		
230-B078	Tree Planting, Southern Wax Myrtle 30 Gallon	EA	12		
230-B084	Tree Planting, Sweetbay Magnolia 45 Gallon	EA	31		
230-B104	Tree Planting, Black Gum 65 Gallon	EA	15		1
230-B105	Tree Planting, Bosque Elm 65 Gallon	EA	34		1
230-B106	Tree Planting, Japanese Maple 45 Gallon	EA	1		1
230-B107	Tree Planting, Longleaf Pine 30 Gallon	EA	37		1
230-B108	Tree Planting, Bottlebrush 15 Gallon	EA	5		1
230-B109	Tree Planting, Buttonbush 7 Gallon	EA	9		1
230-D001	Bed Preparation	SF	33,814		4
233-A003	Tree Bark Mulch, Type III	CY	313		
233-C005	Straw Mulch, Class II	CY	35		
907-234-A001	Temporary Silt Fence	LF	6,400		1
907-234-D001	Inlet Siltation Guard	EA	12		1
907-234-E001	Reset Inlet Siltation Guard	EA	12		1
237-A002	Wattles, 20"	LF	1,700		1
907-240-A001	Interlocking Flexible Block Erosion Control System	SY	938		1
907-242-A001	Construction of Welcome Center Facility	LS	1		7 8 2 3
907-242-PP003	Installation of Irrigation System Pump	EA	1		5
246-B001	Rockbags	EA	50		1
249-A001	Riprap for Erosion Control	TON	75		1
249-A001	Riprap for Erosion Control Washed Gravel for Landscaped Areas	TON	53		2
907-260-A005	Utility Work - Sewer,	LS	1		3 6 2
907-262-A007	Utility Work - Water,	LS	1		3 6 2
907-282-A068	Sprinkler Head, 1812-RVAN-18	EA	16		1

1. ESTIMATED QUANTITY
2. FOR USE AS "DRY CREEK BED" IN ENTRY DETENTION PONDS AT FRONT OF WELCOME CENTER BUILDING.
3. (2) INCLUDES ITEMS AS NOTED ON WORKING NOS. UTIL-1 THRU UTIL-25.
4. INCLUDES BED EDGING AS NOTED IN DETAIL ON WKG. NO. LD-1.
5. REFER WKG. NO. IRR-3 FOR DETAILS.
6. (2) REFER TO SPECIAL PROVISION 907-242-14.
7. (2) INCLUDES WELCOME CENTER BUILDING, ENTRY PLAZA, RAISED CROSSWALK, MAINTENANCE SHED, PICNIC SHELTERS AND ALL OTHER AMMENITIES AS SHOWN ON PLAN SHEETS NOS. 89, 93, 94, AND 8000 THRU 8905 (OR AS AMMENDED).
8. (3) INCLUDES WELCOME CENTER BUILDING, ENTRY PLAZA, RAISED CROSSWALK, MAINTENANCE SHED, PICNIC SHELTERS AND ALL OTHER AMMENITIES AS SHOWN ON PLAN SHEETS NOS. 89, 93, 94, AND 8000 THRU 8905 (OR AS AMMENDED).

GEOFFREY PAUL CROSBY PROFESSIONAL ENGINEER 19294 STATE OF MISSISSIPPI
01/30/2026

ADDENDUM

DESIGNED BY: GEOFFREY CROSBY
DETAILED BY: PATRICK FURR
CHECKED BY: GABE FAGGARD
DATE: 01/30/2026

FMS CON: 109171-301000
PROJECT NO.: STBG-0010-01(180)
COUNTY: JACKSON

SUMMARY OF QUANTITIES

SHEET ID SQ-2
SHEET NO. 12

4/16/2026 10:10 AM

REVISIONS		
	DATE	BY
1	2/23/26	PF
2	2/24/26	PF
3	4/17/26	PF

SUMMARY OF QUANTITIES (SHEET 3)

PAY ITEM NO.	PAY ITEM	UNIT	JACKSON : 109171-301000 Prelim	Final	
907-282-A069	Sprinkler Head, 1812-RVAN-24	EA	36		1
907-282-A070	Sprinkler Head, 1812-RVAN-24-360	EA	11		1
907-282-A071	Sprinkler Head, 1812-RVAN-LCS	EA	3		1
907-282-A072	Sprinkler Head, 1812-RVAN-RCS	EA	2		1
907-282-A073	Sprinkler Head, 1812-RVAN-SST	EA	1		1
907-282-A074	Sprinkler Head, 1812-RVAN-14	EA	162		1
907-282-B001	Piping, 1 1/2" Diameter	LF	300		
907-282-B003	Piping, 1" Diameter	LF	4,400		
907-282-B006	Piping, 2" Diameter	LF	1,975		
907-282-C003	Sleeves, 4"	LF	500		
907-282-D001	Valve Control Wire	LF	13,950		
907-282-G008	Electric Controller, 16 Station	EA	1		
907-282-H001	Electric Control Valve, 1 1/2"	EA	3		
907-282-H002	Electric Control Valve, 1"	EA	8		
907-282-H003	Electric Control Valve, 2"	EA	2		
907-282-J003	Isolation Valve, 2"	EA	5		
907-282-J003	Isolation Valve, 2" Master Valve	EA	1		
907-290-A001	Flagpole	EA	1		
304-F001	3/4" and Down Crushed Stone Base	TON	18,838		2 3
	OR				
304-F002	Size 610 Crushed Stone Base	TON	18,838		2 3
	OR				
304-F003	Size 825B Crushed Stone Base	TON	18,838		2 3
907-403-A002	12.5-mm, MT, Asphalt Pavement	TON	2,038		
907-403-A005	19-mm, MT, Asphalt Pavement	TON	2,815		
907-403-A014	9.5-mm, MT, Asphalt Pavement	TON	1,313		
406-D001	Fine Milling of Bituminous Pavement, All Depths	SY	1,131		
407-A001	Asphalt for Tack Coat	GAL	2,297		
501-A004	10" Reinforced Cement Concrete Pavement, Broom Finish	SY	2,816		4 3
501-B001	10" Plain Cement Concrete Pavement, Broom Finish	SY	22,810		4 3
501-D001	Expansion Joints, With Dowels	LF	338		
501-F001	Concrete Lug Anchors	LF	76		
907-601-B001	Class "B" Structural Concrete, Minor Structures	CY	38		1
602-A001	Reinforcing Steel	LBS	2,012		
603-CA012	18" Reinforced Concrete Pipe, Class III, Rubber Type Gaskets	LF	656		
603-CA027	24" Reinforced Concrete Pipe, Class III, Rubber Type Gaskets	LF	240		
603-CB003	18" Reinforced Concrete End Section	EA	10		
603-CB004	24" Reinforced Concrete End Section	EA	6		
603-CE001	18" x 11" Concrete Arch Pipe, Class A III	LF	72		
603-CE003	22" x 13" Concrete Arch Pipe, Class A III, Flexible Plastic Gaskets	LF	312		
603-CE014	36" x 23" Concrete Arch Pipe, Class A III, Flexible Plastic Gaskets	LF	72		
603-CF002	22" x 13" Concrete Arch Pipe End Section	EA	4		
603-CF004	36" x 23" Concrete Arch Pipe End Section	EA	2		
603-PE001	12" Corrugated Polyethylene Pipe	LF	571		
603-PE003	18" Corrugated Polyethylene Pipe	LF	704		
603-PE009	8" Corrugated Polyethylene Pipe	LF	176		

1. INCLUDES QUANTITY FOR DRAINAGE STRUCTURES, 25.823 CY; ROADSIDE SIGNS, 8.610 CY; DIRECTIONAL SIGNS, 3.138 CY.
2. INCLUDES A 20% INCREASE FROM CALCULATED QUANTITY.
3. CALCULATED QUANTITIES FOR CRUSHED STONE:ASPHALT PAVEMENT STRUCTURE, 9748.80 TONS; CONCRETE PAVEMENT STRUCTURE, 8866.80 TONS; SHOULDER TREATMENT, 171.60 TONS; LANDSCAPE MAINTENANCE STRIP, 28.80 TONS
4. INCLUDES REINFORCING STEEL (3)

01/30/2026

ADDENDUM

DESIGNED BY: GEOFFREY CROSBY
DETAILED BY: PATRICK FURR
CHECKED BY: GABE FAGGARD
DATE: 01/30/2026

FMS CON: 109171-301000
PROJECT NO.: STBG-0010-01(180)
COUNTY: JACKSON

SUMMARY OF QUANTITIES

SHEET ID
SQ-3

SHEET NO.
13

4/16/2026 10:10 AM _sq3.dwg

REVISIONS	
DATE	BY
2/23/26	PF
2/24/26	PF
4/17/26	PF

SUMMARY OF QUANTITIES (SHEET 4)

PAY ITEM NO.	PAY ITEM	UNIT	JACKSON : 109171-301000		
			Prelim	Final	
604-A001	Castings	LBS	79		
604-B001	Gratings	LBS	1,776		
907-604-PP002	8" Trench Drain, Per Plans Slot Drain	LF	56		3 △1
907-604-PP002	8" Trench Drain, Per Plans Inline Drain	LF	37		4 △1
607-B026	72" Type I Chain Link Fence, Class I , With Top Guard	LF	874		
607-B027	72" Type I Chain Link Fence, Class II	LF	2,940		
607-G061	Gate, 12' x 6' Double Chain Link	EA	1		
607-G098	Gate, 16' x 6' Double Chain Link with Top Guard	EA	1		
607-P1018	Line Post, 9' x 2" Galvanized Steel	EA	347		
607-P2013	Brace Post, 10' x 2 1/2" Galvanized Steel	EA	49		
607-P3009	Gate Post, 9' x 3 1/2" Galvanized Steel	EA	4		
907-607-PP005	Cantilever Gate, Per Plans Tubular Steel Gate	EA	1		6 △1
608-A001	Concrete Sidewalk, Without Reinforcement	SY	4,245		
907-608-C001	Detectable Warning Panels	SF	282		
907-608-D002	Stamped and Colored Concrete Sidewalk	SF	4,070		5
609-B002	Concrete Curb, Header	LF	283		
609-C003	Concrete Integral Curb, Type 3	LF	2,212		
609-D001	Combination Concrete Curb and Gutter Type 1	LF	1,593		
609-D004	Combination Concrete Curb and Gutter Type 2 Modified	LF	207		
609-D013	Combination Concrete Curb and Gutter Type 3B	LF	2,474		
612-A001	Flowable Fill, Excavatable	CY	15		1
616-A001	Concrete Median and/or Island Pavement, 10-inch	SY	748		
907-616-C001	Colored and Imprinted Concrete Median and Island Pavement, 10-inch Thickness	SF	2,833		
907-618-A001	Maintenance of Traffic	LS	1		
619-A5001	Temporary Traffic Stripe, Detail	LF	1,480		
619-D1001	Standard Roadside Construction Signs, Less than 10 Square Feet	SF	52		
619-D2001	Standard Roadside Construction Signs, 10 Square Feet or More	SF	304		
907-619-E3001	Changeable Message Sign	EA	1		2
619-F1001	Concrete Median Barrier, Precast	LF	1,480		
619-F2001	Remove and Reset Concrete Median Barrier, Precast	LF	1,480		
619-G4005	Barricades, Type III, Single Faced	LF	24		
619-G5001	Free Standing Plastic Drums	EA	31		
619-G7001	Warning Lights, Type "B"	EA	2		
619-G8001	Warning Lights, Type "C"	EA	3		
620-A001	Mobilization	LS	1		
907-626-C011	6" Thermoplastic Double Drop Edge Stripe, Continuous White	LF	2,447		△3
907-626-F004	6" Thermoplastic Double Drop Edge Stripe, Continuous Yellow	LF	1,672		
907-626-G003	Thermoplastic Detail Stripe, Blue-ADA	LF	670		
907-626-G006	Thermoplastic Double Drop Detail Stripe, White	LF	5,376		
907-626-G007	Thermoplastic Double Drop Detail Stripe, Yellow	LF	422		
907-626-H001	Thermoplastic Legend, Blue-ADA Handicap Symbol	EA	6		
907-626-H006	Thermoplastic Double Drop Legend, White	SF	55		
907-626-H007	Thermoplastic Double Drop Legend, White	LF	456		
907-627-K001	Red-Clear Reflective High Performance Raised Markers	EA	49		
907-628-E002	6" Cold Plastic Detail Stripe, Blue-ADA	LF	1,144		
907-628-H004	Cold Plastic Legend, Blue-ADA Handicap Symbol	EA	2		

1. ESTIMATED QUANTITY, ACTUAL QUANTITY AS DIRECTED BY THE ENGINEER.
2. LOCATION AS DIRECTED BY ENGINEER.
3. △1 FOR USE AT WELCOME CENTER BUILDING "WALK-OFF" ENTRY PADS. REFER TO ARCHITECTURAL DRAWINGS.
4. △1 REFER TO WKG. NO. MCD-8 FOR DETAILS.
5. REFER TO SPECIAL PROVISION 904-616-C.
6. △1 REFER TO WKG. NO. MCD-7. LOCATION AS DIRECTED BY THE ENGINEER.

GEOFFREY PAUL CROSBY PROFESSIONAL ENGINEER 19294 STATE OF MISSOURI
01/30/2026

ADDENDUM

DESIGNED BY: GEOFFREY CROSBY
DETAILED BY: PATRICK FURR
CHECKED BY: GABE FAGGARD
DATE: 01/30/2026

FMS CON: 109171-301000
PROJECT NO.: STBG-0010-01(180)
COUNTY: JACKSON

SUMMARY OF QUANTITIES

SHEET ID
SQ-4

SHEET NO.
14

4/16/2026 10:11 AM _2026.dwg

REVISIONS		
	DATE	BY
1	2/23/26	PF
2	2/24/26	PF
3	4/17/26	PF

SUMMARY OF QUANTITIES (SHEET 5)

PAY ITEM NO.	PAY ITEM	UNIT	JACKSON : 109171-301000		
			Prelim	Final	
907-628-K003	High Performance Cold Plastic Detail Stripe, White	LF	9,201		
907-628-K004	High Performance Cold Plastic Detail Stripe, Yellow	LF	1,672		
907-628-L003	High Performance Cold Plastic Legend, White	LF	240		
907-628-L004	High Performance Cold Plastic Legend, White	SF	125		
630-A001	Standard Roadside Signs, Sheet Aluminum, 0.080" Thickness	SF	204		
630-A003	Standard Roadside Signs, Sheet Aluminum, 0.125" Thickness	SF	62		
630-A005	Standard Roadside Signs, Sheet Aluminum, 0.1" Thickness	SF	121		
630-B002	Interstate Directional Signs, Bolted Extruded Aluminum Panels, Ground Mounted	SF	100		
630-C001	Square Tube Posts, 4.0 lb/ft	LF	299		
630-C004	Square Tube Posts, 9.0 lb/ft	LF	202		
630-C005	Square Tube Posts, 2.0 lb/ft	LF	533		
630-C1001	Square Post Inner Sleeve	LF	56		
907-630-O001	Remove and Reset Sign Assembly	EA	2		
699-A001	Roadway Construction Stakes	LS	1		
815-A002	Loose Riprap, Size 100	TON	60		1
815-E001	Geotextile under Riprap for ditch in Landscape Area	SY	226		2
815-E001	Geotextile under Riprap	SY	85		

1. ESTIMATED QUANTITY, ACTUAL QUANTITY AS DIRECTED BY THE ENGINEER.
2. FOR USE AS "DRY CREEK BED" IN ENTRY DETENTION PONDS AT FRONT OF WELCOME CENTER BUILDING.

ADDENDUM

DESIGNED BY: GEOFFREY CROSBY
DETAILED BY: PATRICK FURR
CHECKED BY: GABE FAGGARD
DATE: 01/30/2026

FMS CON: 109171-301000
PROJECT NO.: STBG-0010-01(180)
COUNTY: JACKSON

SUMMARY OF QUANTITIES

SHEET ID
SQ-5

SHEET NO.
15

4/18/2026 10:11 AM

REVISIONS		
	DATE	BY
1	2/23/26	PF
2	2/24/26	PF
3	4/17/26	PF

3 NOTE:
PERIMETER FENCE AND GATE (NOT INCLUDING THE UTILITY AREA AS SHOWN IN DETAIL BELOW) SHALL BE CLASS II, TYPE I (WITHOUT TOP GUARD BARBWIRE).

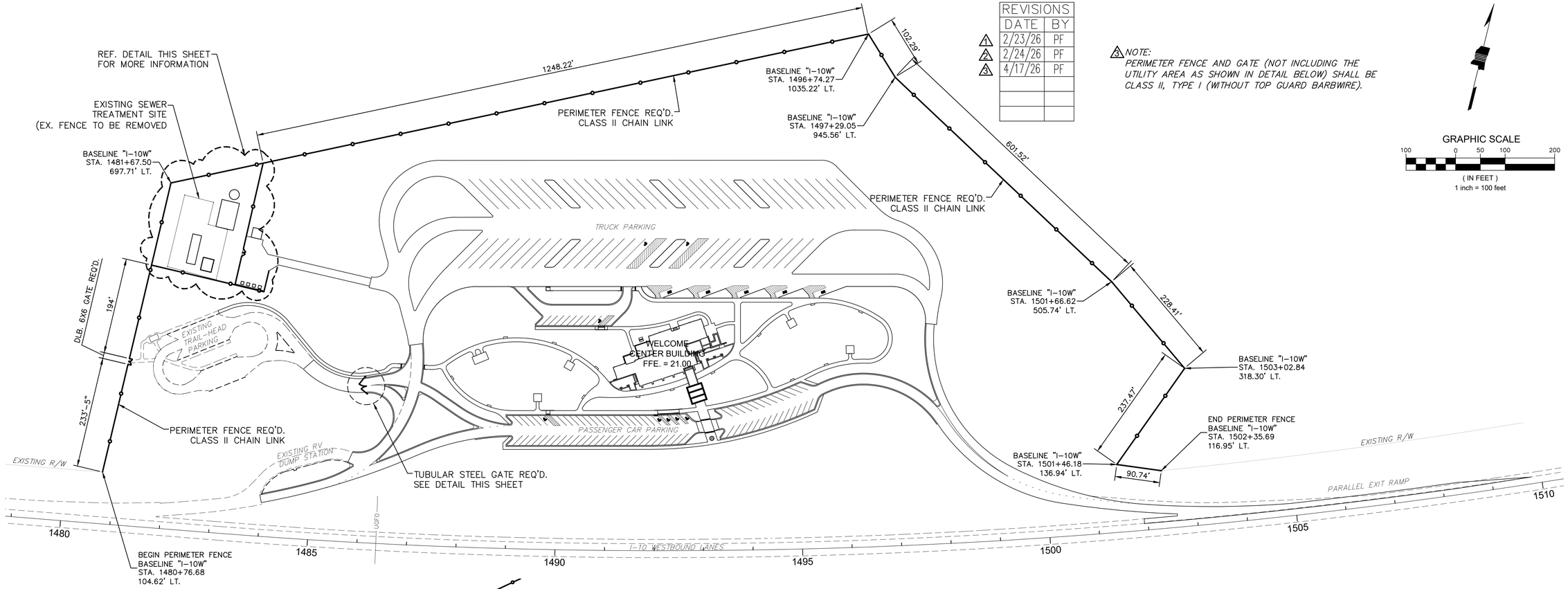

GRAPHIC SCALE
100 0 50 100 200
(IN FEET)
1 inch = 100 feet

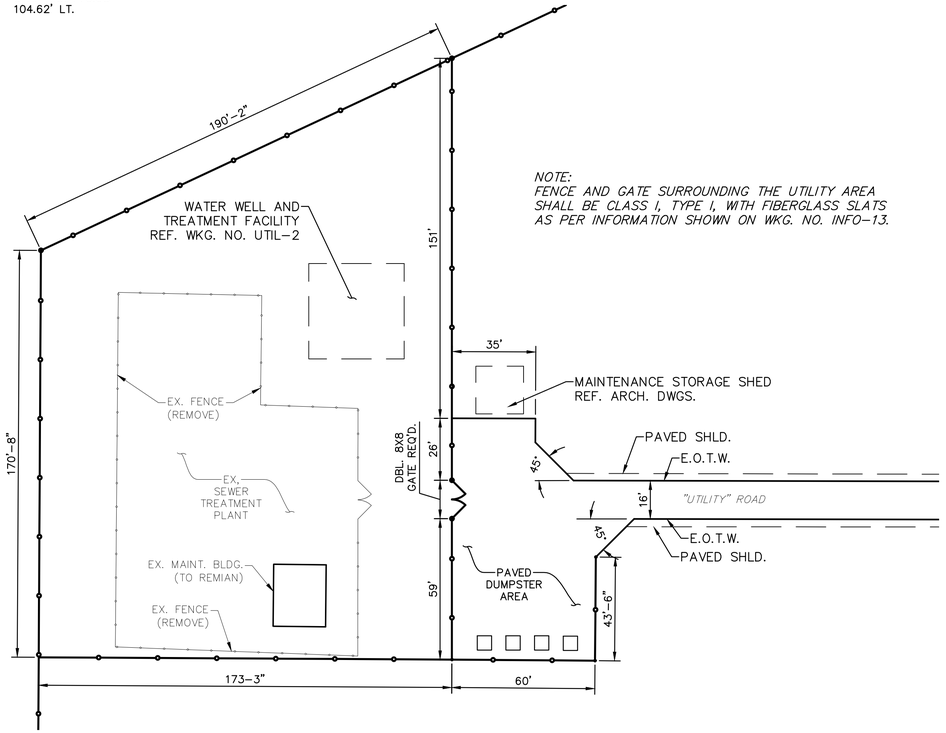

NOTE:
FENCE AND GATE SURROUNDING THE UTILITY AREA SHALL BE CLASS I, TYPE I, WITH FIBERGLASS SLATS AS PER INFORMATION SHOWN ON WKG. NO. INFO-13.

UTILITY ENCLOSURE FENCE LAYOUT DETAIL
NOT TO SCALE

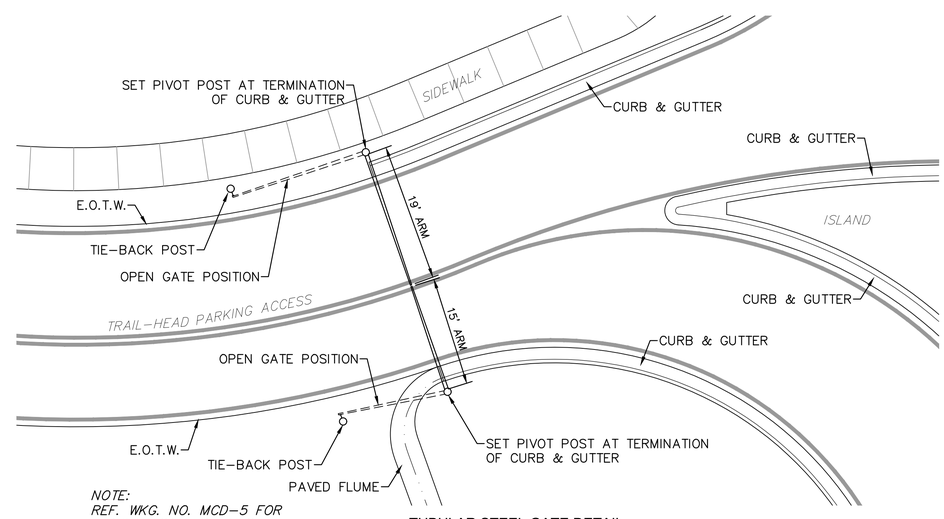

NOTE:
REF. WKG. NO. MCD-5 FOR TUBULAR GATE DETAILS

TUBULAR STEEL GATE DETAIL
NOT TO SCALE

ADDENDUM

DESIGNED BY: GEOFFREY CROSBY
DETAILED BY: PATRICK FURR
CHECKED BY: GABE FAGGARD
DATE: 01/30/2026

FMS CON: 109171-301000
PROJECT NO.: STBG-0010-01(180)
COUNTY: JACKSON

SITE PLAN
PERIMETER FENCE AND TUBULAR STEEL GATE

SHEET ID
PLN-8

SHEET NO.
35

4/17/2026 1:29 PM jdm-fence.dwg

GRAPHIC SCALE

40 0 20 40 80

(IN FEET)
1 inch = 40 feet

EXISTING R/W

WATER TREATMENT PLANT
SEE SHT. UTIL-2

SEWER TREATMENT PLANT
SEE SHT. UTIL-3

WATER SERVICE
SEE SHT. UTIL-10 & UTIL-12 3

SEWER MAIN PLAN & PROFILE
SEE SHT. UTIL-12

WATER MAIN & SERVICES
SEE SHT. UTIL-10

SEWER MAIN PLAN & PROFILE
SEE SHT. UTIL-11

REVISIONS		
	DATE	BY
1	2/23/26	PF
2	2/24/26	PF
3	4/17/26	PF

DOUGLAS M. WIMBERLY
REGISTERED PROFESSIONAL ENGINEER AND SURVEYOR
PE-11733
PS-3048
STATE OF MISSOURI
01/30/2026

ADDENDUM

DESIGNED BY: DOUGLAS WIMBERLY
DETAILED BY: SABRINA PARKMOND
CHECKED BY: GABE FAGGARD
DATE: 01/30/2026

FMS CON: 109171-301000
PROJECT NO.: STBG-0010-01(180)
COUNTY: JACKSON

OVERALL UTILITY IMPROVEMENTS LAYOUT

SHEET ID
UTIL-1

SHEET NO.
61

4/16/2026 10:12 AM util-1_overall-layout.dwg

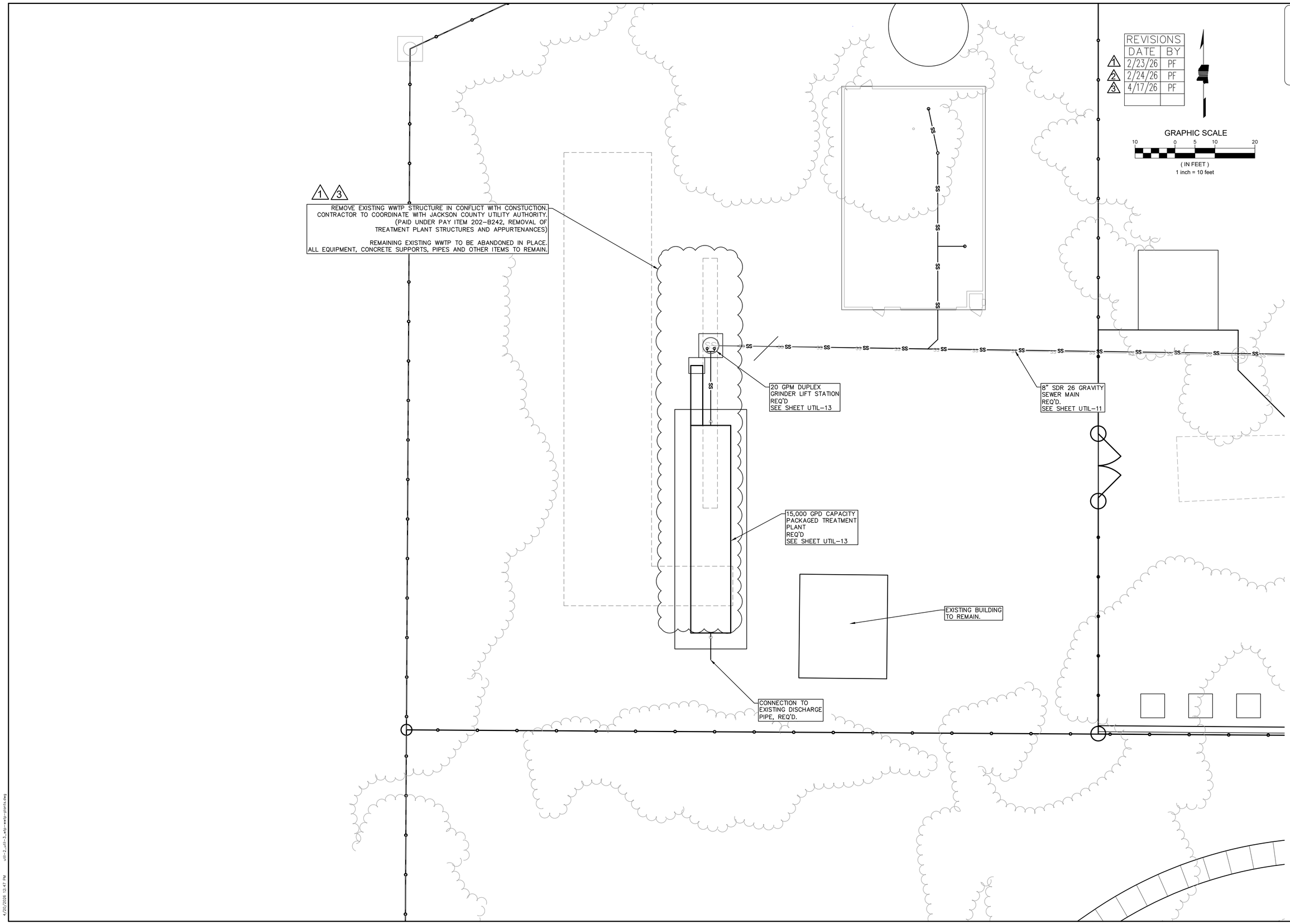

REVISIONS		
	DATE	BY
1	2/23/26	PF
2	2/24/26	PF
3	4/17/26	PF

DOUGLAS M. WIMBERLY REGISTERED PROFESSIONAL ENGINEER AND SURVEYOR PE-11733 PS-3048 STATE OF MISSISSIPPI
01/30/2026

ADDENDUM

DESIGNED BY: DOUGLAS WIMBERLY
DETAILED BY: SABRINA PARKMOND
CHECKED BY: GABE FAGGARD
DATE: 01/30/2026

FMS CON: 109171-301000
PROJECT NO.: STBG-0010-01(180)
COUNTY: JACKSON

WASTE WATER TREATMENT PLANT LAYOUT

SHEET ID
UTIL-3

SHEET NO.
63

4/20/2026 12:47 PM util-2_util-3_wtp-wwtp-plants.dwg

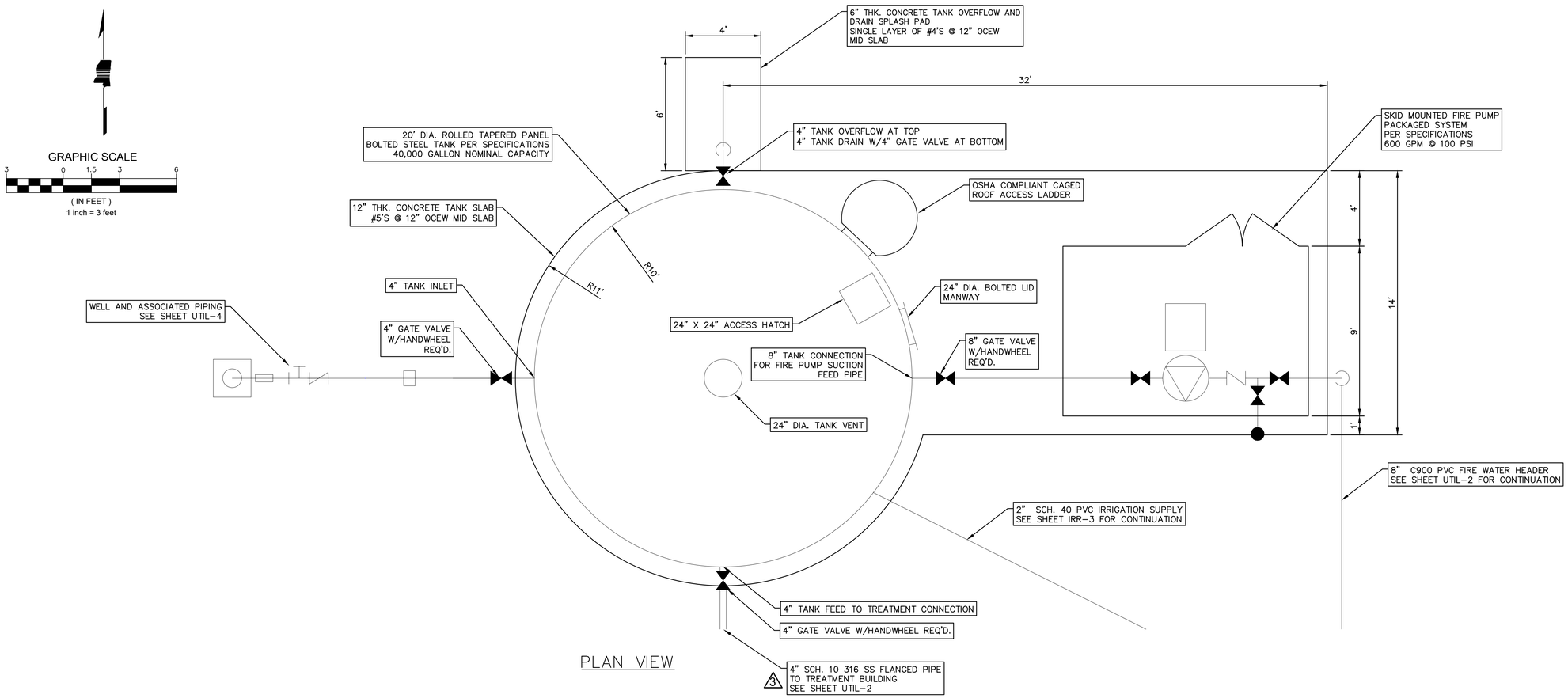

PLAN VIEW

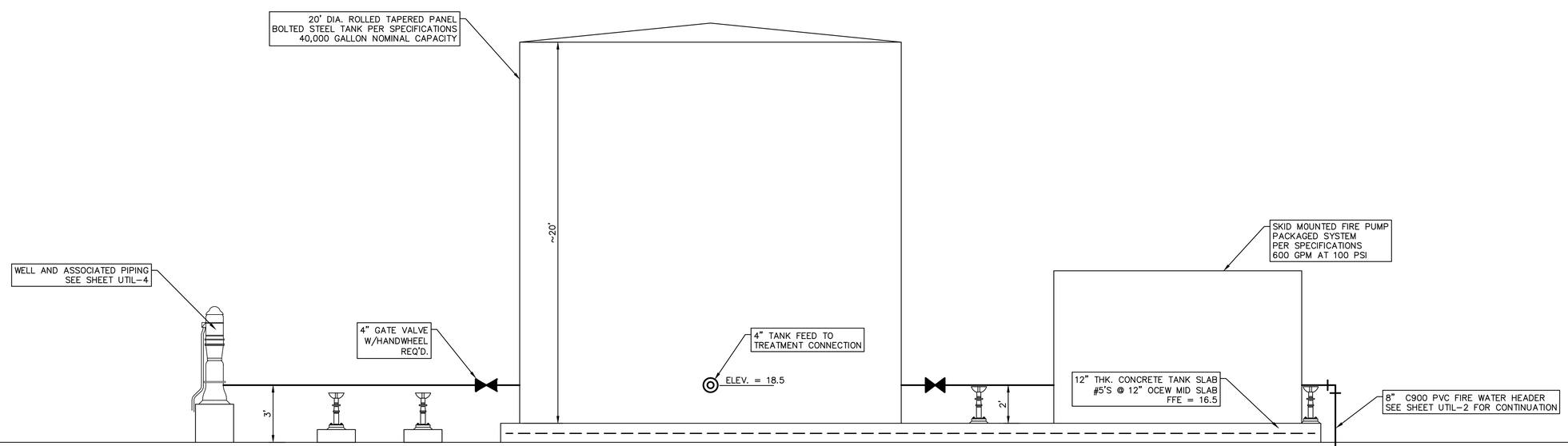

ELEVATION VIEW

REVISIONS		
	DATE	BY
1	2/23/26	PF
2	2/24/26	PF
3	4/17/26	PF

DOUGLAS M. WIMBERLY REGISTERED PROFESSIONAL ENGINEER AND SURVEYOR PE-11733 PS-3048 STATE OF MISSISSIPPI
01/30/2026

ADDENDUM

DESIGNED BY: DOUGLAS WIMBERLY
DETAILED BY: SABRINA PARKMOND
CHECKED BY: GABE FAGGARD
DATE: 01/30/2026

FMS CON: 109171-301000
PROJECT NO.: STBG-0010-01(180)
COUNTY: JACKSON

GROUND STORAGE TANK PLAN AND ELEVATION

SHEET ID
UTIL-5

SHEET NO.
65

util-5_ground-storage-tank.dwg
4/17/2026 1:38 PM

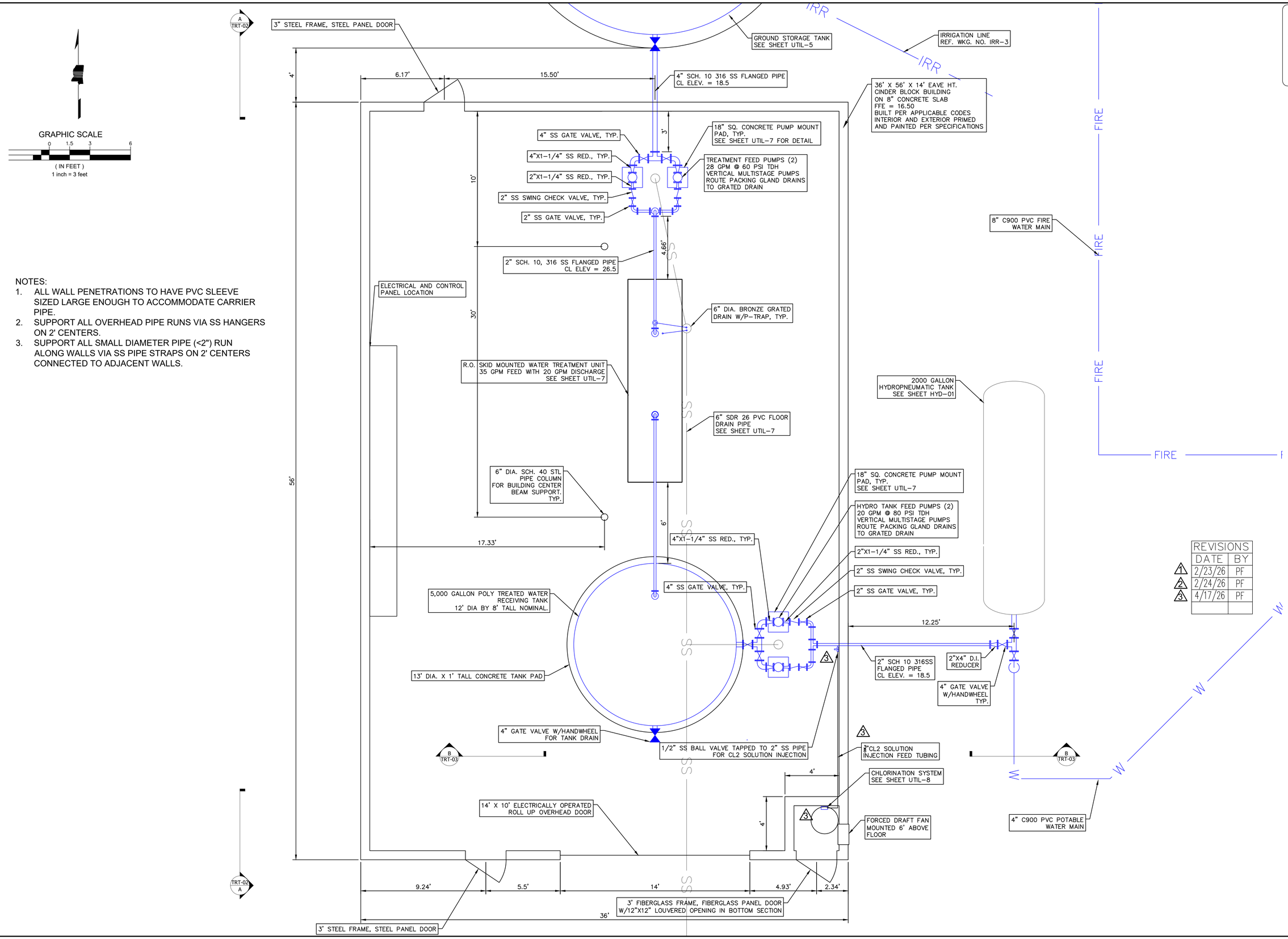

NOTES:

1. ALL WALL PENETRATIONS TO HAVE PVC SLEEVE SIZED LARGE ENOUGH TO ACCOMMODATE CARRIER PIPE.
2. SUPPORT ALL OVERHEAD PIPE RUNS VIA SS HANGERS ON 2' CENTERS.
3. SUPPORT ALL SMALL DIAMETER PIPE (<2") RUN ALONG WALLS VIA SS PIPE STRAPS ON 2' CENTERS CONNECTED TO ADJACENT WALLS.

REVISIONS

	DATE	BY
1	2/23/26	PF
2	2/24/26	PF
3	4/17/26	PF

DOUGLAS M. WIMBERLY REGISTERED PROFESSIONAL ENGINEER AND SURVEYOR PE-11733 PS-3048 STATE OF MISSISSIPPI
01/30/2026

ADDENDUM

DESIGNED BY: DOUGLAS WIMBERLY
DETAILED BY: SABRINA PARKMOND
CHECKED BY: GABE FAGGARD
DATE: 01/30/2026

FMS CON: 109171-301000
PROJECT NO.: STBG-0010-01(180)
COUNTY: JACKSON

WATER TREATMENT PLANT BUILDING
PLAN VIEW

SHEET ID
UTIL-6

SHEET NO.
66

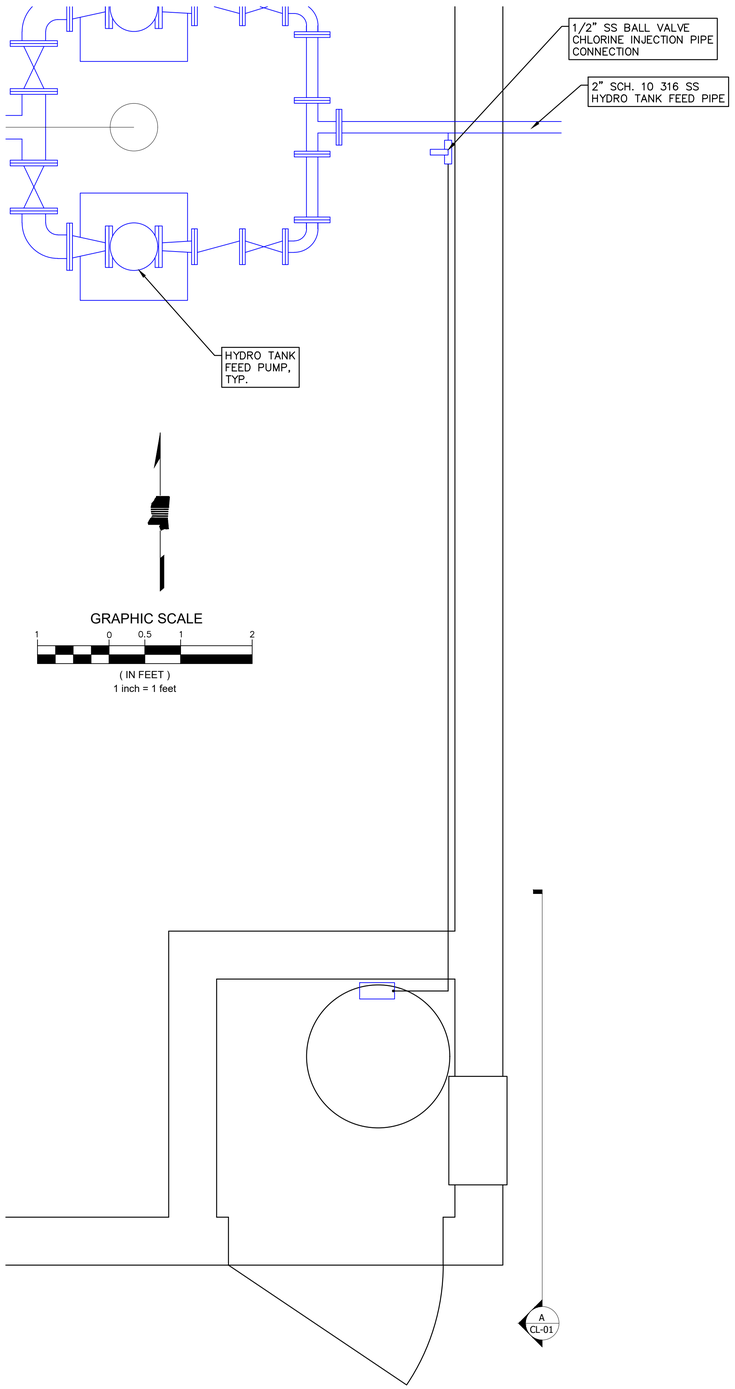

3 CHLORINATION SYSTEM PLAN VIEW

SCALE: AS SHOWN

ALL PVC PIPE AND OR TUBING TO BE U-CLAMPED TO WALLS AT 2' O.C. AS NECESSARY TO PROVIDE ADEQUATE SUPPORT.

REVISIONS		
	DATE	BY
1	2/23/26	PF
2	2/24/26	PF
3	4/17/26	PF

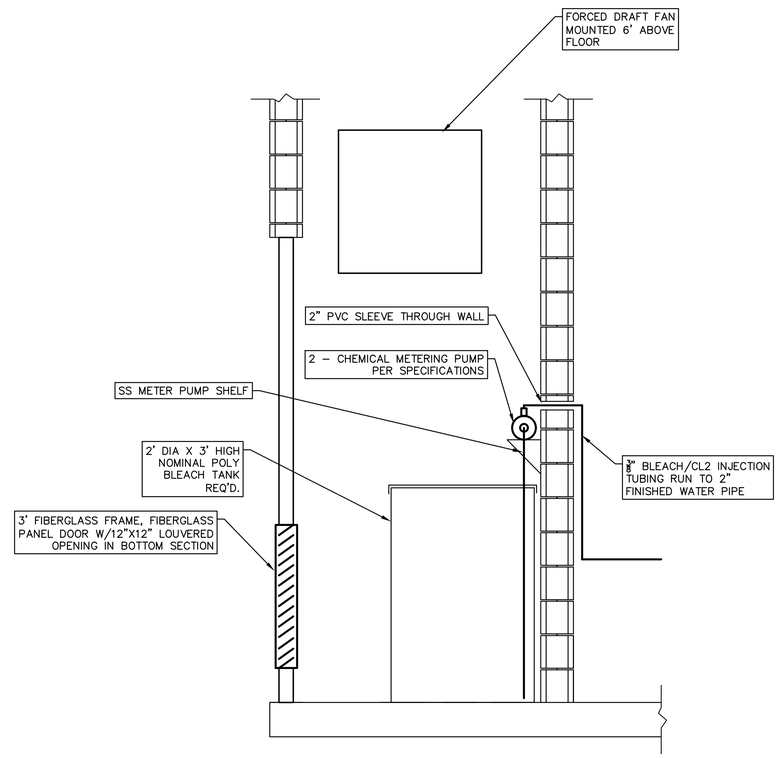

3 A CL-01 BLEACH FEED SYSTEM ROOM SECTION

SCALE: AS SHOWN

DOUGLAS M. WIMBERLY REGISTERED PROFESSIONAL ENGINEER AND SURVEYOR PE-11733 PS-3048 STATE OF MISSISSIPPI
01/30/2026

ADDENDUM

DESIGNED BY: DOUGLAS WIMBERLY
DETAILED BY: SABRINA PARKMOND
CHECKED BY: GABE FAGGARD
DATE: 01/30/2026

FMS CON: 109171-301000
PROJECT NO.: STBG-0010-01(180)
COUNTY: JACKSON

CHLORINATION SYSTEM DETAILS

SHEET ID
UTIL-8

SHEET NO.
68

PROPOSED WELL WATER TREATMENT FACILITY SEE WKG. NO. UTIL-2

8" C900 PVC FIRE WATER MAIN 920 L.F. REQ'D

1" GATE VALVE W/VALVE BOX REQ'D.

BACKFLOW PREVENTER REQ'D (TYP.)

18" STL. CASING BY OPEN TRENCH 180 L.F. REQ'D.

12" STL. CASING BY OPEN TRENCH 40 L.F. REQ'D

1" SCH 40 PVC WATER SERVICE 315± L.F. REQ'D

10' MIN.

4" C900 PVC WATER MAIN 1135 L.F. REQ'D

SERVICE TAP REQ'D

3/4" CTS HDPE TUBING 80 L.F. REQ'D REFERENCE BUILDING MECHANICAL FOR DETAILS

PROPOSED WASTEWATER TREATMENT FACILITY SEE WKG. NO. UTIL-3

CONNECT TO EXISTING 1" SERVICE APPROXIMATE LOCATION (FIELD VERIFY)

EXISTING R/W

8" POST INDICATOR VALVE REQ'D

2" GATE VALVE W/VALVE BOX REQ'D.

4" RPZ BACKFLOW PREVENTOR REQ'D

BACKFLOW PREVENTER REQ'D (TYP.)

CONNECTION TO 3" DOMESTIC WATER SERVICE FEED TO BUILDING

4" FDC CONNECTION REQ'D

4" C900 PVC FDC MAIN 85 L.F. REQ'D

CONNECTION TO 6" FIRE WATER FEED TO BLDG.

CONNECTION TO 4" FDC FEED TO BLDG.

2" SCH. 40 PVC 330 L.F. REQ'D.

3/4" CTS HDPE TUBING 135 L.F. REQ'D REFERENCE BLDG. MECHANICAL FOR DETAILS

SERVICE CONNECTIONS REQ'D FOR GUARD BUILDING AND PAVILLIONS

3/4" CTS HDPE TUBING 300 L.F. REQ'D REFERENCE BLDG MECHANICAL FOR DETAILS

BACKFLOW PREVENTER REQ'D (TYP.)

3/4" CTS HDPE TUBING 40 L.F. REQ'D REFERENCE BLDG MECHANICAL FOR DETAILS

3/4" CTS HDPE TUBING 20 L.F. REQ'D REFERENCE BLDG MECHANICAL FOR DETAILS

5+00 6+00 7+00 8+00 9+00 10+00 11+00 12+00 13+00 14+00 15+00 15+86

GRAPHIC SCALE

50 0 25 50 100

(IN FEET)
1 inch = 50 feet

REVISIONS		
	DATE	BY
1	2/23/26	PF
2	2/24/26	PF
3	4/17/26	PF

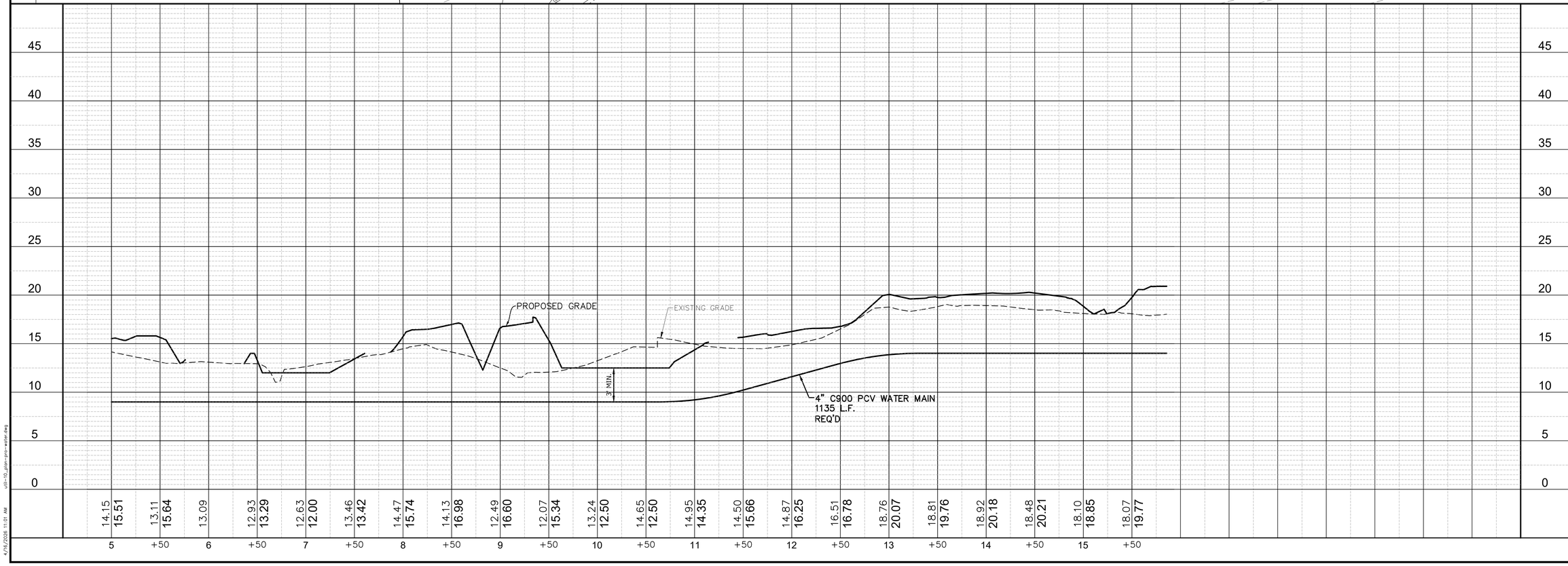

DOUGLAS M. WIMBERLY REGISTERED PROFESSIONAL ENGINEER AND SURVEYOR PE-11733 PS-3044 STATE OF MISSISSIPPI

01/30/2026

ADDENDUM

DESIGNED BY: DOUGLAS WIMBERLY

DETAILED BY: SABRINA PARKMOND

CHECKED BY: GABE FAGGARD

DATE: 01/30/2026

FMS CON: 109171-301000

PROJECT NO.: STBG-0010-01(180)

COUNTY: JACKSON

WATER MAIN & SERVICES PLAN & PROFILE STA. 5+00 TO STA. 16+00

SHEET ID **UTIL-10**

SHEET NO. **70**

util-10_plan-pro-water.dwg

4/16/2026 11:01 AM

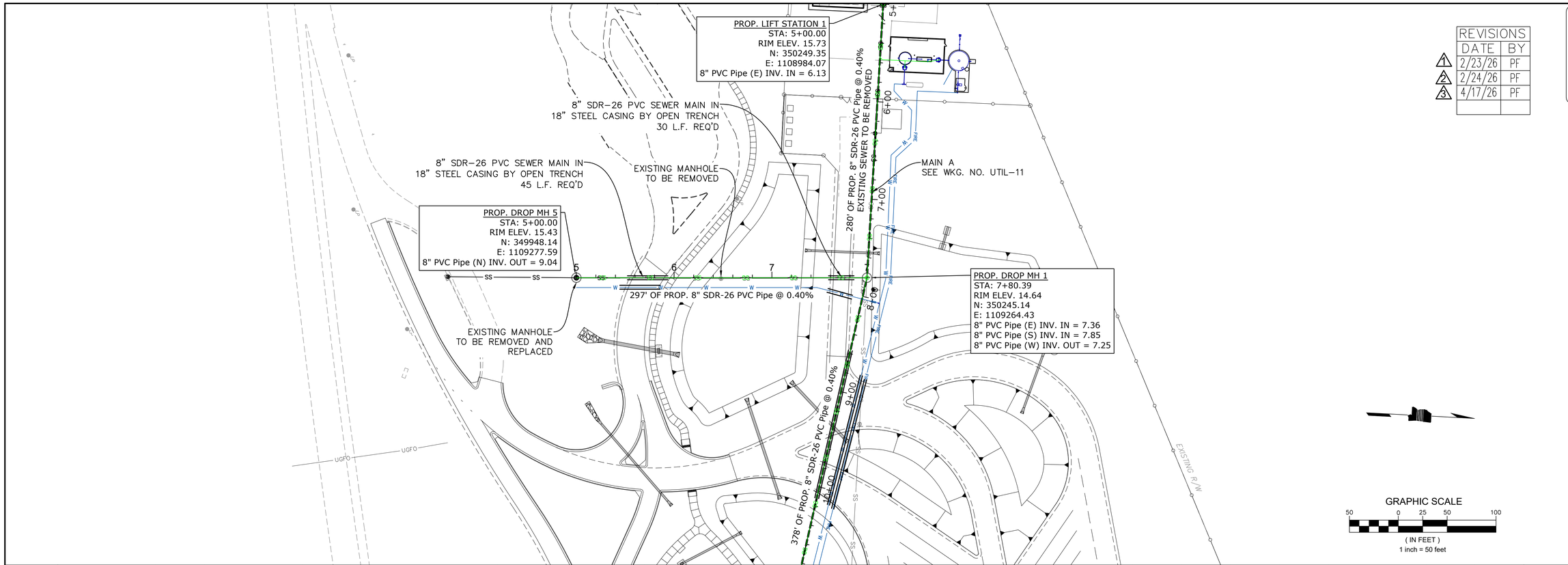

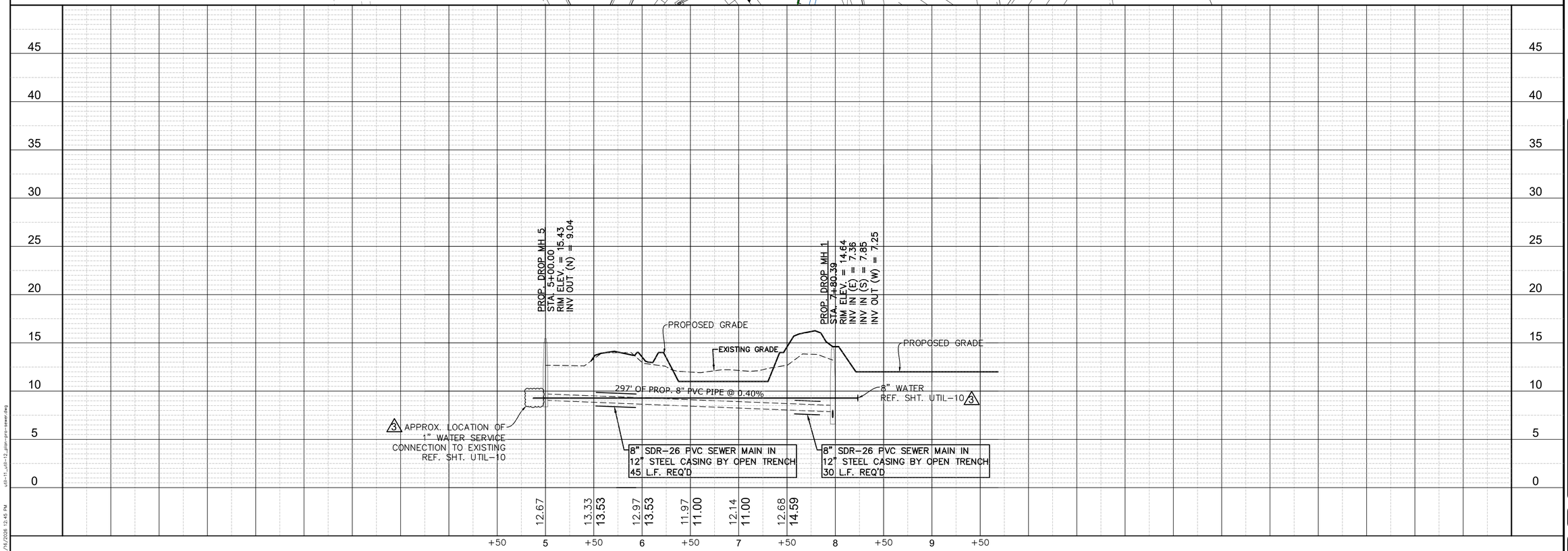

REVISIONS		
	DATE	BY
1	2/23/26	PF
2	2/24/26	PF
3	4/17/26	PF

DOUGLAS M. WIMBERLY REGISTERED PROFESSIONAL ENGINEER AND SURVEYOR PE-11733 PS-3048 STATE OF MISSOURI
01/30/2026

ADDENDUM

DESIGNED BY: DOUGLAS WIMBERLY
DETAILED BY: SABRINA PARKMOND
CHECKED BY: GABE FAGGARD
DATE: 01/30/2026

FMS CON: 109171-301000
PROJECT NO.: STBG-0010-01(180)
COUNTY: JACKSON

SEWER MAIN - LATERAL "A-1"
PLAN & PROFILE
STA. 4+50 TO STA. 9+50

SHEET ID
UTIL-12

SHEET NO.
72

util-11_util-12_plan-prfl-sewer.dwg
4/16/2026 12:45 PM

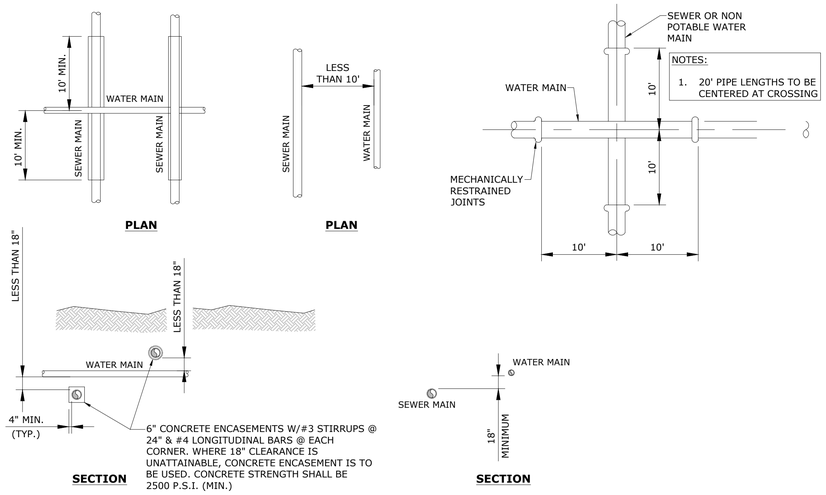

NOTES:

1. 20' PIPE LENGTHS TO BE CENTERED AT CROSSING

WMX WATER AND SEWER CROSSING / SEPARATION DETAIL

NOT TO SCALE

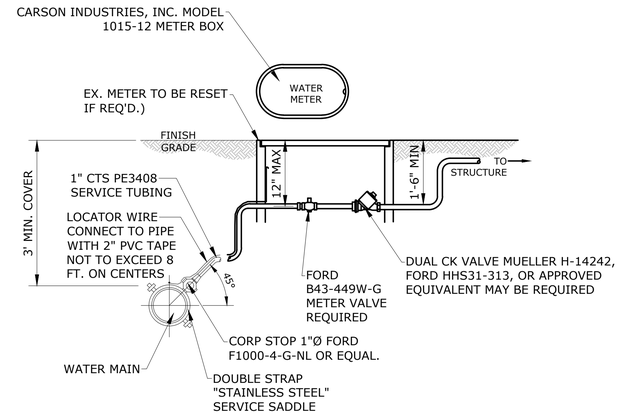

NOTES:

1. FOR WATER SERVICE BACK FILLING & COMPACTION REQUIREMENTS, SEE SPECIFICATIONS.

SVC WATER SERVICE ASSEMBLY

NOT TO SCALE

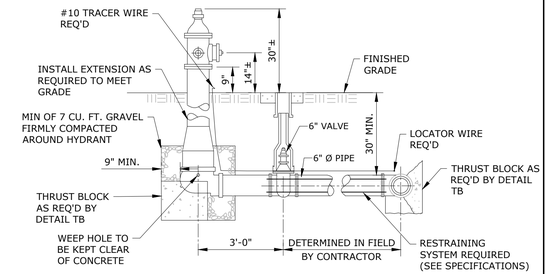

NOTES:

1. FIRE HYDRANT SHALL BE MUELLER SUPER CENTURION 250 OR APPROVED EQUAL. FIRE HYDRANT SHALL BE SAFETY YELLOW IN COLOR.
2. IF THE DISTANCE BETWEEN THE GATE VALVE AND THE WATER MAIN IS MORE THAN 10 FEET, THE ADDITIONAL PIPE WILL BE PAID FOR BY THE LINEAR FOOT.

HYD FIRE HYDRANT ASSEMBLY DETAIL

NOT TO SCALE

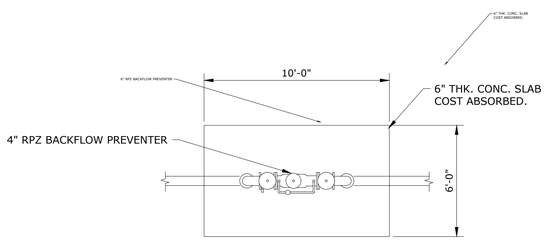

BACK FLOW PREVENTER PLAN VIEW

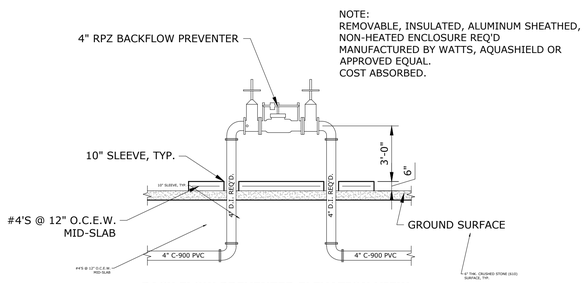

BACK FLOW PREVENTER ELEVATION VIEW

BFP RPZ BACKFLOW PREVENTER DETAIL

NOT TO SCALE

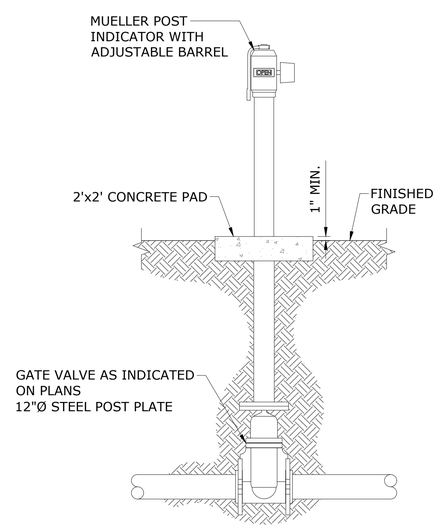

PVI POST INDICATOR VALVE

NOT TO SCALE

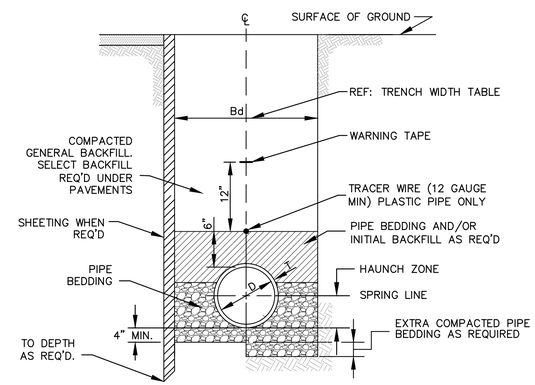

NOTE:

1. CONTRACTOR TO DETERMINE REQUIREMENTS FOR SHEETING AND FOR SLOPING WALL OF TRENCH BASED ON SOIL CONDITIONS.
2. BEDDING AND BACKFILL MATERIALS TO BE PER SPECIFICATION SECTION 33 23 33.
3. TRENCH REPAIRS THROUGH EXISTING PAVEMENTS NOT MADE WITHIN 24 HOURS OF TRENCH CLOSURE SHALL RECEIVE TEMPORARY REPAIR WITH CLAY GRAVEL COURSE OVERLAIN WITH 1" THICK LAYER WASHED GRAVEL, MDOT SIZE 67. TEMPORARY REPAIR SURFACES SHALL BE MAINTAINED DAILY UNITL FINAL TRENCH REPAIRS ARE COMPLETED.

G-1 TYPICAL TRENCH DETAIL FOR UTILITY LINE 3

NOT TO SCALE

REVISIONS		
	DATE	BY
1	2/23/26	PF
2	2/24/26	PF
3	4/17/26	PF

DOUGLAS M. WIMBERLY REGISTERED PROFESSIONAL ENGINEER AND SURVEYOR PE-11733 PS-3048 STATE OF MISSISSIPPI
01/30/2026

ADDENDUM

DESIGNED BY: DOUGLAS WIMBERLY
DETAILED BY: SABRINA PARKMOND
CHECKED BY: GABE FAGGARD
DATE: 01/30/2026

FMS CON: 109171-301000
PROJECT NO.: STBG-0010-01(180)
COUNTY: JACKSON

MISCELLANEOUS UTILITY DETAILS

SHEET ID
UTIL-15

SHEET NO.
75

4/17/2026 1:32 PM util-14_util-15_utility-details.dwg

DRY PIPE AIR COMPRESSOR SCHEDULE

DESIGNATION	AC-1
MANUFACTURER	C-AIRE COMPRESSORS
MODEL NUMBER	S300H-SD1-230
SYSTEM CAPACITY GALLONS	328
MOTOR H.P.	1.50
VOLTAGE	230/60/1
FLA AMPS	8.8
WEIGHT LBS.	85

REMARKS:

1. LISTED AIR COMPRESSOR CAPACITY IS APPROXIMATE. EXACT CAPACITY SHALL BE DETERMINED BY THE FIRE PROTECTION CONTRACTOR.

3 BUILD AMERICA, BUY AMERICA ACT (BABA)

A. THIS PROJECT IS SUBJECT TO THE BUILD AMERICA, BUY AMERICA ACT (BABA), 41 U.S.C. §§ 8301–8305.

B. REFER TO SPECIFICATION SECTION 016000 AND FIRE PROTECTION SPECIFICATIONS FOR REQUIREMENTS.

FIRE PROTECTION LEGEND

TAG	DESCRIPTION	TAG	DESCRIPTION
A/S	AUTOMATIC SPRINKLER	FDV	FIRE DEPARTMENT VALVE
FPW	FIRE PROTECTION WET PIPE	FPD	FIRE PROTECTION DRY PIPE
OS&Y	OUTSIDE STEM & YOKE	PRV	PRESSURE REDUCING VALVE
	CONNECT TO EXISTING	FDC	FIRE DEPT. CONNECTION
	DEMOLITION POINT	(E)	EXISTING

PIPING LEGEND

	DIRECTION OF WATER FLOW
	TEE FITTING
	PIPE TURNING DOWN
	PIPE TURNING UP
	PIPE SHUT-OFF VALVE

FIRE PROTECTION SHEET LIST

Sheet Number	Sheet Name	Drawn By	Checked By
FP000	LEGENDS - FIRE PROTECTION	ADP	DHW
FP100	FLOOR PLAN - FIRE PROTECTION	ADP	DHW
FP200	DETAILS - FIRE PROTECTION	ADP	DHW
FP201	DETAILS - FIRE PROTECTION	ADP	DHW

GENERAL FIRE PROTECTION NOTES

1. THE CONTRACTOR SHALL PROVIDE A COMPLETE & OPERATIONAL AUTOMATIC SPRINKLER SYSTEM FOR ALL NEW CONSTRUCTION AND RENOVATED AREAS, INCLUDING CANOPIES, OVERHANGS, AND ATTICS. PROVIDE ALL ITEMS NECESSARY FOR A COMPLETE SYSTEM, EVEN IF NOT SPECIFICALLY MENTIONED. THE END PRODUCT SHALL PRODUCE A FULLY SPRINKLERED FACILITY. COORDINATE WITH THE ARCHITECTURAL PLANS FOR THE LIMITS OF CONSTRUCTION, CEILING HEIGHTS AND CEILING TYPES. REFER TO THE FLOOR PLANS FOR CONNECTION POINTS AND ZONING OF THE SYSTEM(S).

2. THE SPRINKLER SYSTEM FOR NEWLY CONSTRUCTED AREAS SHALL BE SUPPLIED FROM AUTOMATIC SPRINKLER RISER ASSEMBLIES OR COMBINATION STANDPIPES AND SHALL BE FURNISHED COMPLETE WITH STANDARD TRIM AND THE NECESSARY COMPONENTS TO INTERLOCK WITH THE BUILDING FIRE ALARM SYSTEM.

3. THE FIRE PROTECTION SYSTEM SHALL COMPLY WITH THE REQUIREMENTS OF NFPA, IFC AND IBC CODES, ALL LOCAL, COUNTY, AND STATE REGULATIONS, AS WELL AS THE FACILITY'S INSURANCE UNDERWRITER.

4. THE SPRINKLER SYSTEM SHALL BE HYDRAULICALLY CALCULATED BY THE SPRINKLER CONTRACTOR. PROVIDE CALCULATIONS FOR THE HYDRAULICALLY MOST DEMANDING AREA AND FOR EACH OCCUPANCY CLASSIFICATION. THE CALCULATIONS SHALL UTILIZE CRITERIA FROM THE SPECIFICATIONS.

5. THE SPRINKLER CONTRACTOR SHALL SUBMIT COMPLETE SPRINKLER SHOP DRAWINGS AND CALCULATIONS STAMPED AND SIGNED BY THE SPRINKLER CONTRACTOR WITH A MINIMUM NICET III LEVEL REGISTRATION FOR REVIEW AND APPROVAL PRIOR TO INSTALLATION. THEY MUST BE SIGNED BY A RESPONSIBLE MANAGING EMPLOYEE AND SUBMITTED BY A REGISTERED FIRE PROTECTION CONTRACTOR.

6. ALL SPRINKLER HEADS SHALL BE QUICK RESPONSE TYPE (EXCEPT WHERE PROHIBITED BY CODE) AND PROVIDED WITH TEMPERATURE RATINGS AS DICTATED BY NFPA FOR THE SPACES SERVED AND PER THE REQUIREMENTS OF THE AUTHORITY HAVING JURISDICTION. ALL SPRINKLER HEADS SHALL BE INSTALLED ACCORDING TO THEIR LISTING. THE SPRINKLER CONTRACTOR SHALL COORDINATE THE LOCATION OF PIPING AND HEADS WITH LIGHT FIXTURES, DIFFUSERS, DUCTWORK, PLUMBING LINES, ETC., AND MAKE MINOR ADJUSTMENTS IN THE SPRINKLER LAYOUT WHERE REQUIRED OR DEEMED NECESSARY BY THE ARCHITECT. ALL SPRINKLER HEADS SHALL BE LOCATED SYMMETRICALLY IN ALL AREAS AND CENTERED IN CEILING TILES. PROVIDE SPRINKLER HEADS BY TYPE AS FOLLOWS:

   A. IN AREAS WITH FINISHED CEILING, PROVIDE CONCEALED, FULLY RECESSED QUICK RESPONSE TYPE SPRINKLER HEADS WITH FACTORY PAINTED COVER PLATES. COVER PLATES SHALL BE CUSTOM COLOR AS SELECTED BY THE ARCHITECT. COORDINATE WITH ARCHITECT FOR QUANTITIES AND LOCATIONS OF CUSTOM COLOR COVER PLATES. ASSOCIATED SPRINKLER PIPING SHALL BE ROUTED ABOVE THE CEILING AND IN FURRED SPACES, CHASES, ETC., TO COMPLETELY CONCEAL ALL PIPING.

   B. IN AREAS WITHOUT FINISHED CEILINGS, PROVIDE BRASS, UPRIGHT QUICK RESPONSE TYPE SPRINKLER HEADS. ASSOCIATED SPRINKLER PIPING SHALL BE ROUTED EXPOSED TO VIEW. WHERE EXPOSED IN OCCUPIED SPACES, PAINT PIPE TO MATCH ADJOINING AREAS (COLOR SELECTED BY ARCHITECT). PROVIDE AND INSTALL HARD-WIRE CAGE SPRINKLER GUARDS ON ALL SPRINKLER HEADS SUBJECT TO MECHANICAL DAMAGE.

   C. ALL SPRINKLER HEADS IN AREAS WITH FINISHED CEILING WHICH ARE SUBJECT TO FREEZING CONDITIONS (CANOPIES AND OVERHANGS) SHALL BE CHROME-PLATED, FREEZE-PROOF, CORROSION RESISTANT PENDANT TYPE WITH TEMPERATURE RATING AS CONDITIONS DICTATE. ASSOCIATED SPRINKLER PIPING SHALL BE RUN IN CONDITIONED SPACE AS OUTLINED ABOVE.

7. IN AREAS WHERE THE SPRINKLER SYSTEM IS SUBJECT TO FREEZING CONDITIONS, PROVIDE AUTOMATIC SPRINKLER PROTECTION IN THE FORM OF A DRY PIPE SYSTEM. PROVIDE AIR COMPRESSOR, AIR PIPING AND NECESSARY APPURTENANCES FOR A COMPLETE SYSTEM. REFER TO FLOOR PLANS FOR LOCATION OF VALVE ASSEMBLY.

8. INDICATING VALVE (POST OR WALL) SHALL BE FURNISHED COMPLETE WITH THE NECESSARY COMPONENTS TO SOUND A LOCAL ALARM IN THE EVENT THE VALVE IS CLOSED. ALARM AND WIRING SHALL BE BY THE ELECTRICAL CONTRACTOR.

9. COORDINATE WITH THE ELECTRICAL CONTRACTOR FOR WIRING OF THE VARIOUS TAMPER AND FLOW SWITCHES AS WELL AS AIR COMPRESSORS AND PRE-ACTION SYSTEM CONTROLS.

10. ALL SYSTEM GAUGES AND VALVES SHALL BE ACCESSIBLE FOR INSPECTION AND MAINTENANCE.

11. FLEXIBLE, STAINLESS STEEL HOSE CONNECTIONS BETWEEN SPRINKLER HEADS AND BRANCH PIPING MAY BE UTILIZED WHERE ACCEPTED BY THE AUTHORITY HAVING JURISDICTION. REFER TO SPECIFICATIONS FOR REQUIREMENTS.

12. ALL SPRINKLER BRANCH OUTLETS SHALL BE MINIMUM 1".

13. LOCATE ALL AUTOMATIC SPRINKLER LINES ABOVE CEILING UNLESS OTHERWISE NOTED.

14. EXPOSED PIPING SHALL BE INSTALLED AS HIGH AS POSSIBLE ABOVE THE FLOOR AND TIGHT TO THE STRUCTURE. PIPING SHALL BE PAINTED TO MATCH SURROUNDING COLORS AND TEXTURES AS REQUIRED BY THE ARCHITECT. COORDINATE PAINT COLORS AND TEXTURES WITH THE ARCHITECT PRIOR TO INSTALLATION.

15. ALL SUSPENDED EQUIPMENT, PIPING, MATERIALS, ETC. SHALL BE INDIVIDUALLY SUPPORTED FROM THE BUILDING STRUCTURE. DO NOT SUSPEND ITEMS FROM THE CEILING OR THE CEILING SUPPORT SYSTEM.

REVISIONS

DATE	BY
4/17/26	ADP

DANA HAROLD WARREN
LICENSED PROFESSIONAL ENGINEER
1-30-2026
19999
STATE OF MISSISSIPPI

ADDENDUM

DESIGNED BY: Designer
DETAILED BY: ADP
CHECKED BY: DHW
DATE: January 30, 2026

FMS CON. 109171-301000
PROJECT NO. 18-023a
COUNTY JACKSON

I-10 JACKSON COUNTY WELCOME CENTER

LEGENDS - FIRE PROTECTION

SHEET ID: FP000

SHEET NO. 8500

KEYED NOTES:

1. 6" FIRE SUPPLY LINE. PIV BY CIVIL ENGINEER. SEE CIVIL FOR CONTINUATION.
2. SEE CIVIL FOR FIRE DEPARTMENT CONNECTION.
3. PROVIDE THRUST BLOCK AT 90° BEND, PER DETAIL.
4. DRY PIPE SPRINKLER RISER, PER DETAILS.
5. SEE ARCHITECTURAL DRAWINGS FOR SPRINKLER PIPES ADJACENT TO GLU-LAM BEAMS - TYPICAL.
6. PROVIDE CONCEALED SPRINKLER HEAD WITH CUSTOM COLOR COVER PLATE. COORDINATE COVER PLATE COLOR WITH ARCHITECT.

GENERAL NOTES:

A. REFER TO ARCHITECTURAL SHEET A190 FOR SPRINKLER LAYOUT DIAGRAM.

B. ALL EXPOSED SPRINKLER PIPES TO BE PAINTED WITH CUSTOM COLORS. REFER TO ARCHITECTURAL SHEET 190 FOR PAINT COLOR COORDINATION DIAGRAM.

SPRINKLER HEAD SCHEDULE

SYMBOL	DESCRIPTION	TEMP °F	K- FACTOR
●	FULLY CONCEALED	155	5.6
△	DRY SIDEWALL	155	11.2
○	BRASS UPRIGHT	155	5.6

1. ALL SPRINKLER HEADS SHALL BE QUICK RESPONSE TYPE.
2. FULLY CONCEALED HEADS TO HAVE WHITE COVER PLATES UNLESS NOTED OTHERWISE. COORDINATE COVER PLATE COLOR WITH ARCHITECT.
3. FINAL LOCATION OF ALL SPRINKLER HEADS TO BE COORDINATED WITH FINAL CEILING LAYOUT. CENTER SPRINKLER HEADS IN CEILING TILES.
4. ALL SPRINKLER HEADS RUN-OUTS SHALL BE A MINIMUM OF 1" DIAMETER.
5. PROVIDE HEAD GUARDS ON ALL UPRIGHT HEADS.

REVISIONS

DATE	BY
4/17/26	ADP

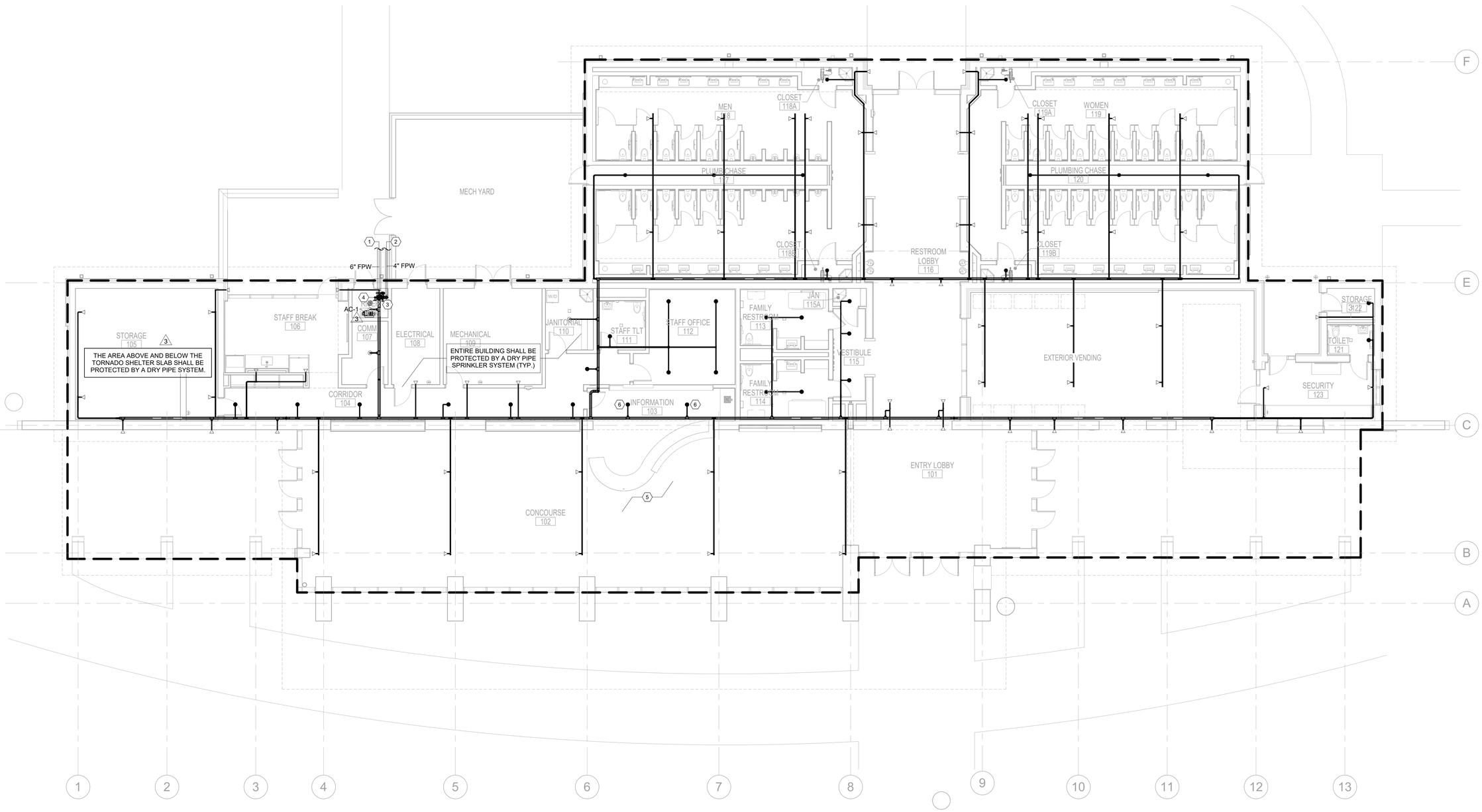

1 FP100 E402 FLOOR PLAN - GROUND LEVEL - FIRE PROTECTION
1/8" = 1'-0"

8' 0' 8' 16'
SCALE: 1/8"=1'-0"

DANA HAROLD WARREN JR. LICENSED PROFESSIONAL ENGINEER 19999 STATE OF MISSISSIPPI
1-30-2026

ADDENDUM

DESIGNED BY:	Designer
DETAILED BY:	ADP
CHECKED BY:	DHW
DATE:	January 30, 2026
FMS CON.	109171-301000
PROJECT NO.	18-023a
COUNTY	JACKSON

I-10 JACKSON COUNTY WELCOME CENTER

FLOOR PLAN - FIRE PROTECTION

SHEET ID: FP100

SHEET NO. 8501

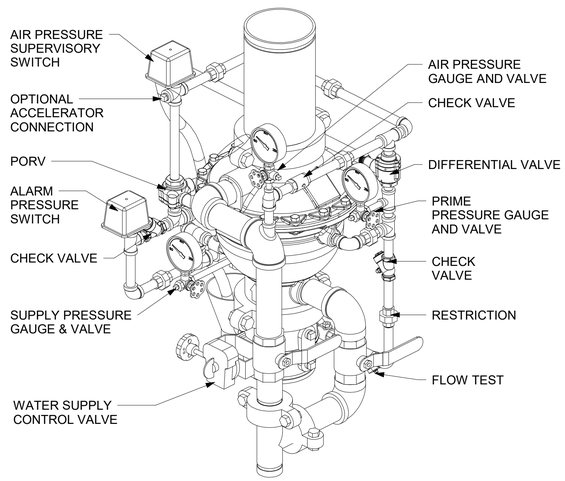

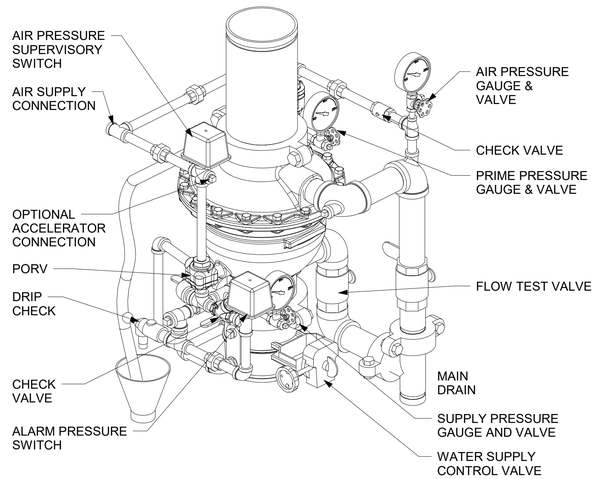

DRY PIPE VALVE ASSEMBLY

No Scale

1

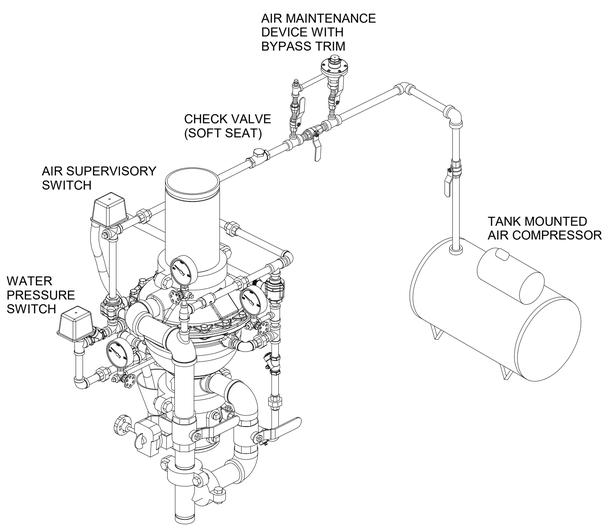

DRY PIPE SYSTEM TANK COMPRESSOR DETAIL

No Scale

2

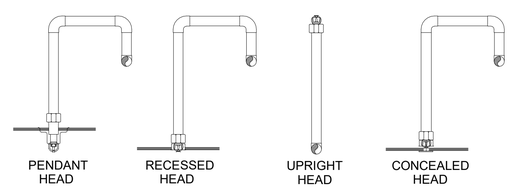

NOTES:

1. WHERE PENDANT STYLE HEADS ARE INDICATED AND AN ACOUSTICAL TILE CEILING IS TO BE INSTALLED, INSTALL PENDANT HEADS CENTERED IN BOTH DIRECTIONS.
2. ARMOVERS WHICH EXCEED 2' - 0" SHALL INCLUDE HANGERS TO STRUCTURE. IF SYSTEM PRESSURE EXCEEDS 100 PSI, ARMOVERS WHICH EXCEED 1' - 0" SHALL INCLUDE HANGERS TO STRUCTURE.
3. CONTRACTOR HAS OPTION OF PROVIDING FLEXIBLE CONNECTIONS PER SPECIFICATION SECTION 21 13 13 EXCEPT AT EXPOSED CEILINGS.

SPRINKLER HEAD DETAILS

No Scale

3

THRUST BLOCK MINIMUM BEARING AREA

(IN SQUARE FEET)

NOMINAL PIPE DIA.	TEES	90° BEND	45° BEND	22.5° BEND
4"	2.7	3.8	2.1	1.0
6"	6.6	7.9	4.3	2.2
8"	9.6	13.6	7.4	3.8
10"	14.5	20.5	11.1	5.7
12"	20.5	29.0	15.7	8.0
14"	27.6	39.0	21.1	10.8

NOTES:

1. THRUST BLOCKS SHALL BE PROVIDED IN ACCORDANCE WITH NFPA 13.
2. LISTED BEARING AREAS ARE BASED ON 100 PSI PRESSURE, 1,000 LB/FT^3 SOIL BEARING STRENGTH, AND 1.5 SAFETY FACTOR.
3. FOR OTHER INTERNAL PRESSURES, MULTIPLY BY RATIO TO 100 PSI.
4. FOR OTHER SOIL BEARING STRENGTHS, DIVIDE BY RATIO TO 1,000 LB/FT^3.

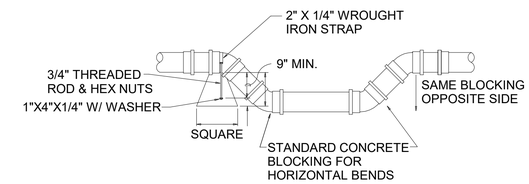

VERTICAL BENDS

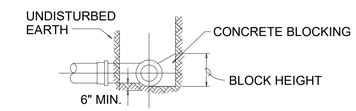

SECTION

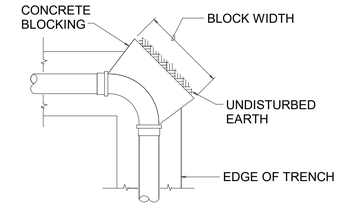

PLAN

HORIZONTAL BENDS

NOTE:
DIMENSIONS ARE CONTROLLED BY DIAMETER OF BRANCH MAIN

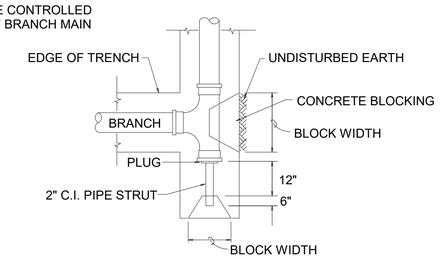

TEES, CROSSES, AND PLUGS

DETAIL NOTES:

1. BLOCK HEIGHT SHOULD BE EQUAL TO OR LESS THAN ONE-HALF THE TOTAL DEPTH TO THE BOTTOM OF THE BLOCK BUT NOT LESS THAN THE PIPE DIAMETER.
2. BLOCK HEIGHT SHOULD BE CHOSEN SUCH THAT THE CALCULATED BLOCK WIDTH VARIES BETWEEN ONE AND TWO TIMES THE HEIGHT.

CONCRETE THRUST BLOCKING

No Scale

4

3

REVISIONS

DATE	BY
4/17/26	ADP

DANA HAROLD WARREN
LICENSED PROFESSIONAL ENGINEER
1-30-2026
19999
STATE OF MISSISSIPPI

ADDENDUM

DESIGNED BY: Designer
DETAILED BY: ADP
CHECKED BY: DHW
DATE: January 30, 2026

FMS CON. 109171-301000
PROJECT NO. 18-023a
COUNTY JACKSON

I-10 JACKSON COUNTY WELCOME CENTER

DETAILS - FIRE PROTECTION

SHEET ID: FP200

SHEET NO. 8502

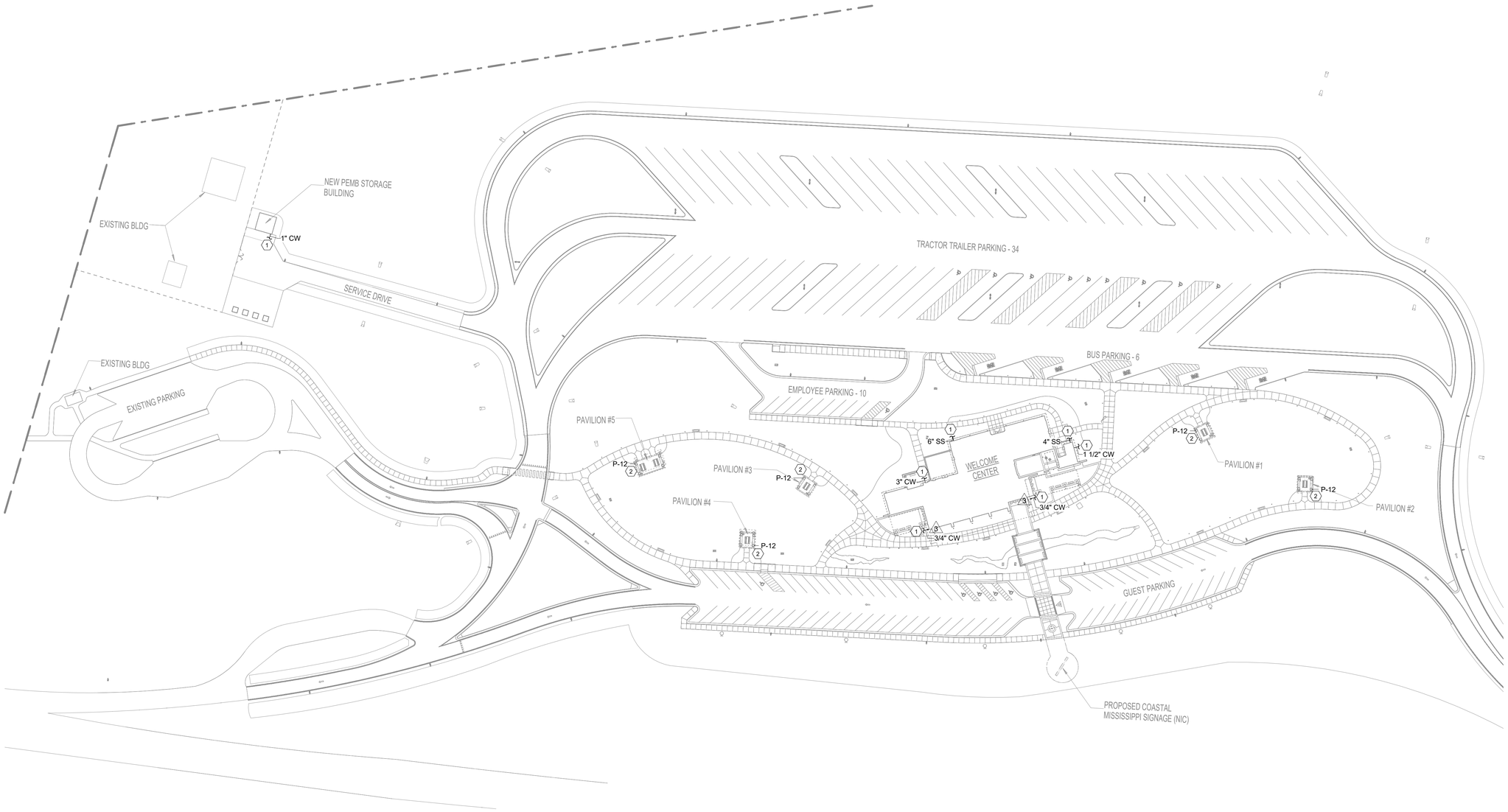

NORTH

1 P001 E402 SITE PLAN - PLUMBING
1" = 60'-0"

KEYED NOTES:

1. SEE CIVIL FOR CONTINUATION.
2. CIVIL TO PROVIDE 3/4" CW SUPPLY LINE FOR THE WALL HYDRANT IN PAVILION CONCRETE WALL.

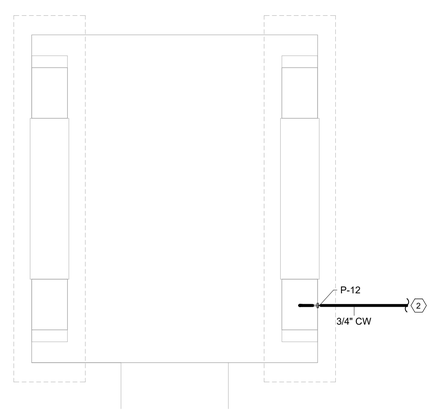

2 P001 E402 SINGLE BAY PAVILION TYPICAL - PLUMBING
1/4" = 1'-0"

3 P001 E402 DOUBLE BAY PAVILION TYPICAL - PLUMBING
1/4" = 1'-0"

REVISIONS	
DATE	BY
4/17/26	ADP

3

DANA HAROLD WARREN JR. LICENSED PROFESSIONAL ENGINEER 19999 STATE OF MISSISSIPPI
1-30-2026

ADDENDUM

DESIGNED BY: Designer
DETAILED BY: ADP
CHECKED BY: DHW
DATE: January 30, 2026

FMS CON. 109171-301000
PROJECT NO. 18-023a
COUNTY JACKSON

I-10 JACKSON COUNTY WELCOME CENTER

SITE PLAN - PLUMBING

SHEET ID: P001

SHEET NO. 8601

KEYED NOTES:

1. SEE CIVIL FOR CONTINUATION.
2. PROVIDE BALANCING VALVES - SET TO INDICATED GPM.
3. PROVIDE TRAP PRIMER VALVE FOR FLOOR DRAIN. ROUTE 1/2" CW LINE BELOW SLAB TO TRAP.
4. PROVIDE 1" MAKE-UP WATER LINE WITH BACKFLOW PREVENTOR TO MECHANICAL EQUIPMENT. SEE MECHANICAL SHEETS FOR CONTINUATION.
5. (3) PROVIDE A WOODFORD MODEL Y95 GROUND HYDRANT, OR EQUAL TOO. THE GROUND HYDRANT SHALL BE NON-FREEZE WITH A LOCKABLE HINGED COVER.

REVISIONS	
DATE	BY
(3) 4/17/26	ADP

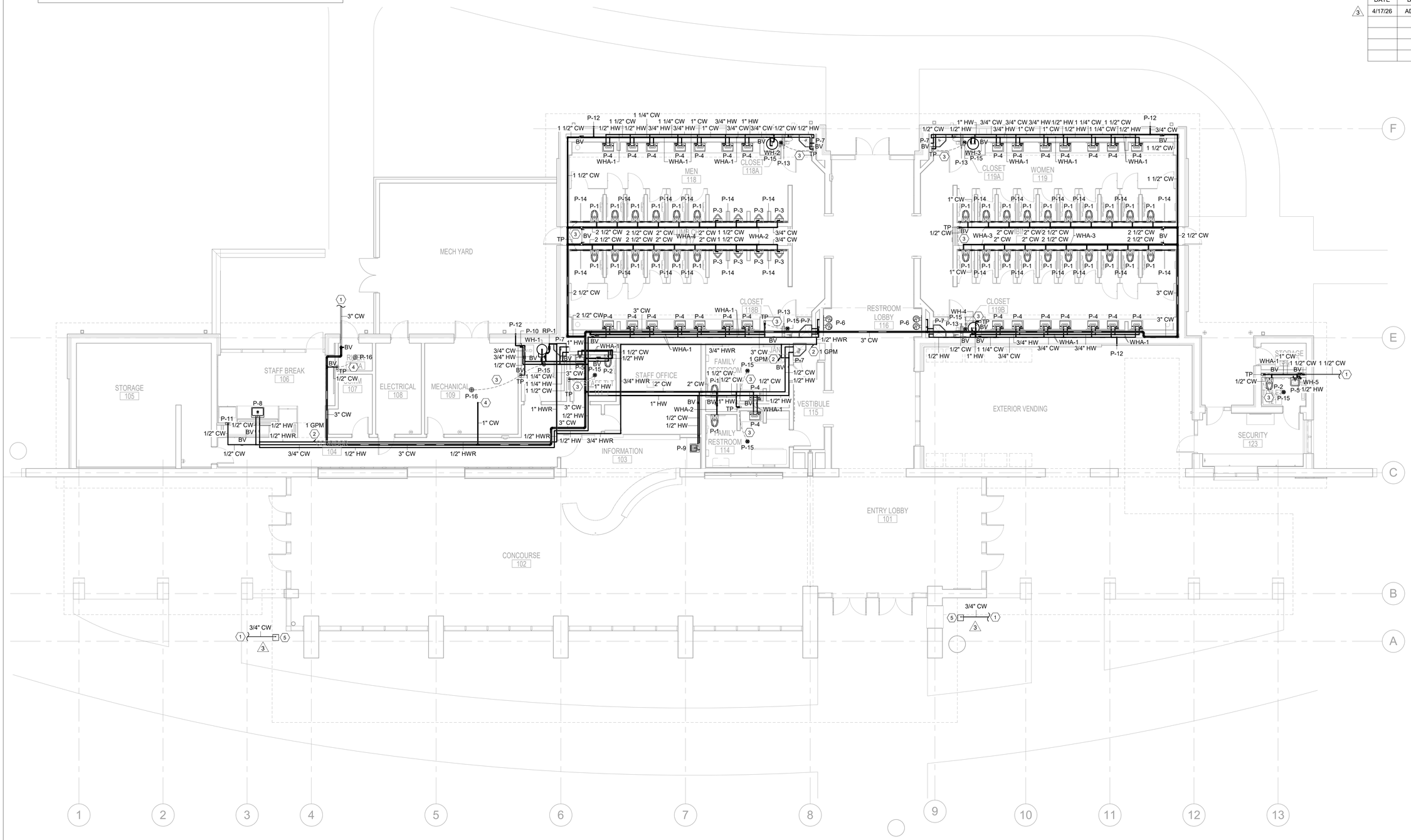

1 (P100 E402) FLOOR PLAN - GROUND LEVEL - PLUMBING
1/8" = 1'-0"

8' 0' 8' 16'
SCALE: 1/8"=1'-0"

DANNY HAROLD WARREN
LICENSED PROFESSIONAL ENGINEER
19999
STATE OF MISSISSIPPI
1-30-2026

ADDENDUM

DESIGNED BY:	Designer
DETAILED BY:	ADP
CHECKED BY:	DHW
DATE:	January 30, 2026
FMS CON.	109171-301000
PROJECT NO.	18-023a
COUNTY	JACKSON

I-10 JACKSON COUNTY WELCOME CENTER

FLOOR PLAN - PLUMBING

SHEET ID: P100

SHEET NO. 8602

PLUMBING FIXTURE CONNECTION SCHEDULE

FIXTURE TAG	DESCRIPTION	CONNECTION SIZE		
		WASTE	COLD WATER	HOT WATER
P-1	W.C., PUBLIC, WALL MTD., HARDWIRED SENSOR FLUSH VALVE, BARRIER-FREE	3"	1"	----
P-2	W.C., PRIVATE, WALL MTD., HARDWIRED SENSOR FLUSH VALVE, BARRIER-FREE	3"	1"	----
P-3	URINAL, PUBLIC, WALL MTD. HARDWIRED SENSOR FLUSH VALVE, BARRIER-FREE	1-1/2"	1/2"	1/2"
P-4	LAV., PUBLIC, UNDERMOUNT, HARDWIRED SENSOR FAUCET, BARRIER-FFREE	1-1/2"	1/2"	1/2"
P-5	LAV., PRIVATE, WALL MTD., HARDWIRED SENSOR FAUCET, BARRIER-FREE	1-1/2"	1/2"	1/2"
P-6	DRINKING FOUNTAIN, ELECTRIC, ADA, W/BOTTLE FILLER	1-1/2"	1/2"	----
P-7	SINK, MOP (24"x24" CORNER)	3"	1/2"	1/2"
P-8	SINK, SINGLE COMPARTMENT, UNDERMOUNT, GOOSENECK FAUCET	1-1/2"	1/2"	1/2"
P-9	SINK, SINGLE COMPARTMENT, UNDERMOUNT, GOOSENECK FAUCET	1-1/2"	1/2"	1/2"
P-10	CONNECTION, WASHING MACHINE	2"	1/2"	1/2"
P-11	CONNECTION, WATER SUPPLY BOX	----	1/2"	----
P-12	HOSE BIBB, EXTERIOR, FROSTPROOF, RECESSED BOX WITH LOCKABLE COVER	----	3/4"	----
P-13	HOSE REEL, INTERIOR, WALL MTD.	----	1/2"	1/2"
P-14	LINEAR DRAIN	2"	----	----
P-15	FLOOR DRAIN, REGULAR W/TRAP PRIMER	3"	----	----
P-16	FLOOR DRAIN, MECHANICAL ROOM W/TRAP PRIMER	3"	----	----

NOTES:

1. ALL WALL MOUNTED FIXTURES SHALL BE PROVIDED WITH FLOOR MOUNTED, CONCEALED ARM WALL CARRIERS.
2. ALL EXPOSED P-TRAPS SHALL BE PROVIDED W/LAV SHIELDS.
3. PROVIDE BACKFLOW PREVENTER AT CONNECTION TO OWNER FURNISHED EQUIPMENT.
4. PROVIDE ISOLATION VALVES ON HOT AND COLD WATER SUPPLY PIPING TO EACH PLUMBING FIXTURE.
5. REFER TO ARCHITECTURAL DRAWINGS FOR ELEVATIONS OF FIXTURES.
6. PROVIDE AND INSTALL TRAP PRIMERS FOR ALL FLOOR DRAINS.

ELECTRIC HOT WATER HEATER SCHEDULE

DESIGNATION	WH-1	WH-2	WH-3	WH-4
LOCATION	JANITORIAL 111	MEN'S ROOM 118	WOMEN'S ROOM 119	WOMEN'S ROOM 119
TYPE	ELECTRIC STORAGE	ELECTRIC STORGAE	ELECTRIC STORAGE	ELECTRIC STORAGE
BASIS OF DESIGN	AO SMITH DRE-52	AO SMITH DEL-40	AO SMITH DEL-40	AO SMITH DEL-40
STORAGE, GALLONS	50	40	40	40
RECOVERY @ 100F RISE, GPH	98	49	49	49
HEATING ELEMENTS QUANITY	6	2	2	2
HEATING ELEMENTS, KW EACH	4	6	6	6
HEATING ELEMENTS, KW TOTAL	24	12	12	12
STORAGE TEMPERATURE, DEGREES F	140	140	140	140
ASME STORAGE TANK	NO	NO	NO	NO
ASME PRESSURE/TEMP. RELIEF VALVE	YES	YES	YES	YES
TANK DIAMETER, INCHES	21-3/4	24	24	24
TANK HEIGHT, INCHES	55-3/4	32-1/4	32-1/4	32-1/4
VOLTAGE	480/60/3	480/60/1	480/60/1	480/60/1
EMERGENCY POWER	NO	NO	NO	NO
REMARKS	1	2	2	2

REMARKS:
1. HEATING ELEMENTS ARE INCOLOY SHEATHED
2. HEATING ELEMENTS ARE SIMULATANEOUS.

INSTANTANEOUS WATER HEATER SCHEDULE

DESIGNATION	WH-5
LOCATION	TOILET 121
TYPE	ELECTRIC TANKLESS
MANUFACTURER	HUBBELL
MODEL NO.	R007-2S
TEMPERATURE RISE DEG. F	40
DISCHARGE TEMP	110
ELECTRICAL VOLTAGE	208/60/1
KW	5.4
MAX AMPS	25
EMERGENCY POWER	NONE
REMARKS	1

REMARKS:
1. TANKLESS WATER HEATER TO BE INSTALLED UNDER THE LAVATORY. REFER TO PLANS FOR LOCATION.

THERMOSTATIC MIXING VALVE

TAG	TMV-1	TMV-2
MANUFACTURER	LEONARD	LEONARD
MODEL NO.	TM-26-LF	TM-26-LF
SERVICE	WH-1	WH-2, WH-3, WH-4
RATED GPM AT MAX PRESSURE DROP	10	10
MAX PRESSURE DROP PSI	10	10
OUTLET TEMP %%DF	120	120

REMARKS:
1. PROVIDE WITH BALL VALVE AND DAIL THERMOMETER.

EXPANSION TANK SCHEDULE

MARK	ET-1	ET-2	ET-3	ET-4
MANUFACTURER	AMTROL	AMTROL	AMTROL	AMTROL
MODEL NO.	ST-20V-C	ST-5C	ST-5C	ST-5C
SERVICE	WH-1	WH-2	WH-3	WH-4
TANK VOLUME GALLONS	8.6	2	2	2
MAX ACCEPTANCE VOLUME GALLONS	3.2	0.9	0.9	0.9
MAX WORKING PRESSURE PSIG	150	150	150	150
TANK DIAMETER x HEIGHT, INCHES	12 x 22	8 x 14	8 x 14	8 x 14
LOCATION	JANITORIAL 111	CLOSET 118A	CLOSET 119A	CLOSET 119B

REMARKS
1. VERTICAL TANK.

HOT WATER RECIRCULATION PUMP SCHEDULE

TAG	RP-1	
GPM	3	
FT. HD	6.9	
POWER	62 WATTS	
SERVICE	WH-1	
MANUFACTURER	BELL AND GOSSETT	
MODEL NO.	PL-30B	
ELECTRICAL	115/60/1	
RPM	2,650	
TEMP °F	120	

REMARKS:
1. PROVIDE AQUA STAT, TIMER, AND AUTOMATIC RESTART.
2. MOUNT PUMP INLINE WITH PIPING.

BUILD AMERICA, BUY AMERICA ACT (BABA)

A. THIS PROJECT IS SUBJECT TO THE BUILD AMERICA, BUY AMERICA ACT (BABA), 41 U.S.C. §§ 8301–8305.

B. REFER TO SPECIFICATION SECTION 016000 AND PLUMBING SPECIFICATIONS FOR REQUIREMENTS.

REVISIONS	
DATE	BY
4/17/26	ADP

DANNY HAROLD WARREN JR. LICENSED PROFESSIONAL ENGINEER 19999 STATE OF MISSISSIPPI
1-30-2026

ADDENDUM

DESIGNED BY: Designer
DETAILED BY: ADP
CHECKED BY: DHW
DATE: January 30, 2026

FMS CON. 109171-301000
PROJECT NO. 18-023a
COUNTY JACKSON

I-10 JACKSON COUNTY WELCOME CENTER

SCHEDULES - PLUMBING

SHEET ID: P600

SHEET NO. 8612

KEYED NOTES:

1. PLACE OUTDOOR UNIT ON CONCRETE SUPPORT PAD PER DETAIL.
2. PROVIDE GREENHECK MODEL HTOD-330 OR EQUIVALENT TORNADO RATED DAMPER.
3. PROVIDE GREENHECK MODEL HTOD-331 OR EQUIVALENT TORNADO RATED DAMPER.
4. MOUNT BOTTOM OF MINISPLIT AIR HANDLING UNIT AT 7'-6" ABOVE FINISHED FLOOR.
5. EXPOSED ROUND DUCT TO BE DOUBLE WALL SPIRAL CONSTRUCTION WITH PAINT-GRIP SURFACE. PAINT DUCT IN COLOR SELECTED BY ARCHITECT.
6. SIDEWALL SUPPLY REGISTER TO BE SEIHO MODEL NT OR EQUAL. CONTRACTOR TO COORDINATE WITH ARCHITECTURAL PLANS FOR EXACT MOUNTING HEIGHT.
7. OPENING THRU ROOF TO ROOF MOUNTED EXHAUST FAN. PROVIDE OPEN ENDED DUCT WITH EXPANDED METAL SCREEN. SEE MECHANICAL ROOF PLAN FOR CONTINUATION.
8. OUTDOOR AIR DUCT CONTINUES UP THRU ROOF FOR CONNECTION TO ROOF MOUNTED INTAKE HOOD. SEE MECHANICAL ROOF PLAN FOR CONTINUATION.
9. MOUNT BOTTOM OF LOUVER AT 12'-5" ABOVE FINISHED FLOOR.
10. MOUNT BOTTOM OF LOUVER AT 10'-7" ABOVE FINISHED FLOOR.
11. MOUNT BOTTOM OF LOUVER AT 9'-4" ABOVE FINISHED FLOOR.
12. MOUNT BOTTOM OF LOUVER AT 6'-4" ABOVE FINISHED FLOOR.
13. DUCT MOUNTED DOUBLE DEFLECTION GRILLE WITH 22.5 DEG OPPOSED HORIZONTAL AIRFLOW. GRILLE TO BE TITUS MODEL S300FS DIRECT SPIRAL MOUNTED GRILLE OR EQUAL.
14. MOUNT BOTTOM OF SUPPLY GRILLE AT 10'-8" ABOVE FINISHED FLOOR.
15. MOUNT BOTTOM OF RETURN GRILLE AT 10'-8" ABOVE FINISHED FLOOR.
16. MOUNT BOTTOM OF MINISPLIT AIR HANDLING UNIT AT 6'-6" ABOVE FINISHED FLOOR.

DUCT COLOR LEGEND	
	SUPPLY AIR
	RETURN AIR
	EXHAUST AIR
	OUTDOOR AIR

SHEET TO BE PRINTED IN COLOR

REVISIONS	
DATE	BY
4/17/26	JFC

3

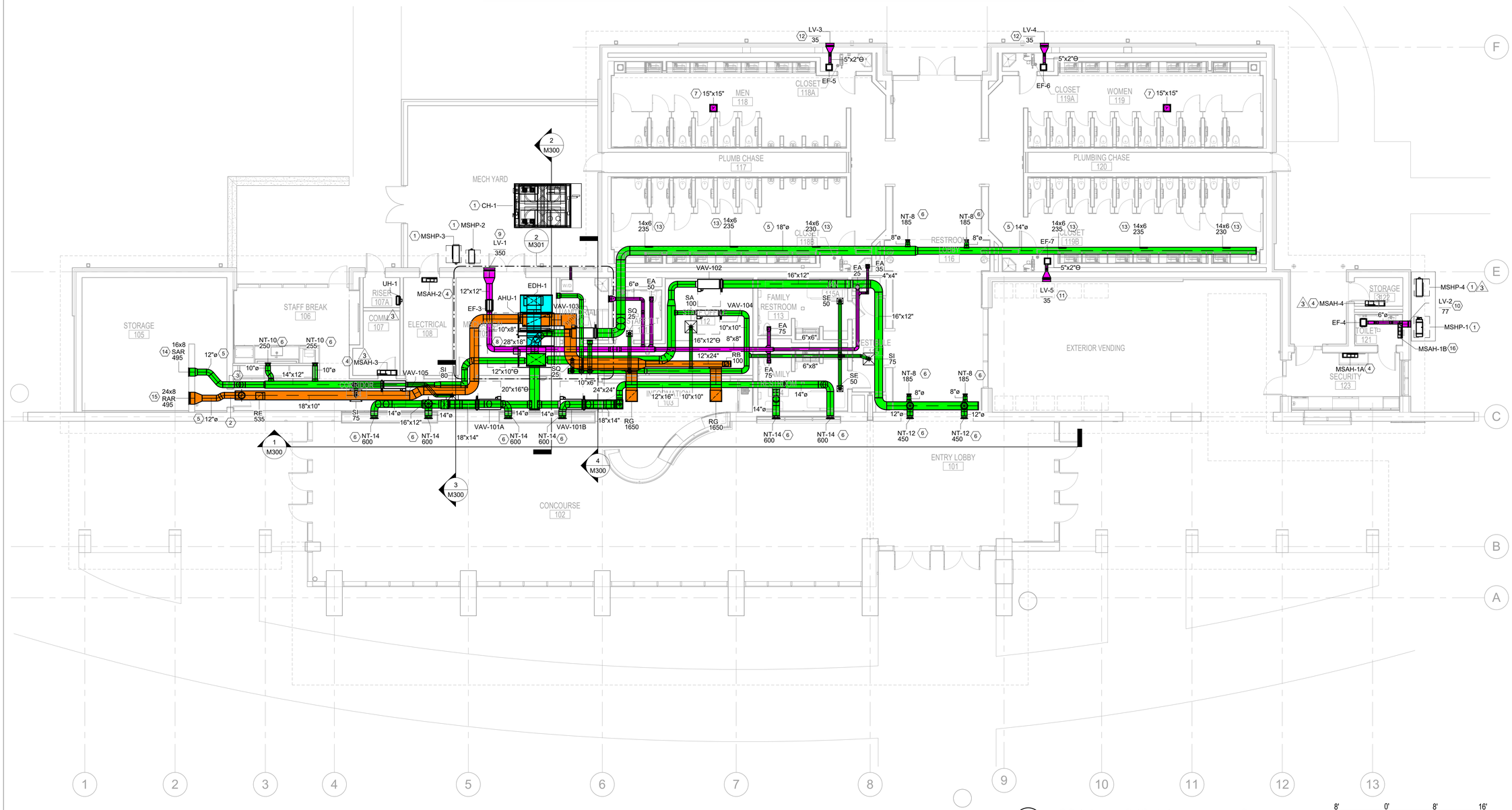

1 M100 E402 FLOOR PLAN - GROUND LEVEL - HVAC
1/8" = 1'-0"

8' 0' 8' 16'
SCALE: 1/8"=1'-0"

DANNY HAROLD WARREN
LICENSED PROFESSIONAL ENGINEER
1-30-2026
19999
STATE OF MISSISSIPPI

ADDENDUM

DESIGNED BY:	JFC
DETAILED BY:	JFC
CHECKED BY:	DHW
DATE:	January 30, 2026
FMS CON.	109171-301000
PROJECT NO.	18-023a
COUNTY	JACKSON

I-10 JACKSON COUNTY WELCOME CENTER

FLOOR PLAN - HVAC

SHEET ID: M100

SHEET NO. 8701

KEYED NOTES:

1. PROVIDE HEAT TRACING FOR ALL EXPOSED CHILLED WATER PIPING.
2. ROUTE CHILLED WATER SUPPLY & RETURN PIPING ABOVE GROUND TO BUILDING. PROVIDE ISOLATION VALVES AT CHILLER.
3. ROUTE REFRIGERANT PIPING LOW ALONG GRADE TO EXTERIOR OF BUILDING. ENTER BUILDING AND RISE PIPING UP ABOVE CEILING HEIGHT. SIZE, INSTALL, AND SUPPORT REFRIGERANT PIPING PER MANUFACTURER'S REQUIREMENTS.
4. ROUTE REFRIGERANT PIPING LOW ALONG GRADE TO EXTERIOR OF BUILDING. ENTER BUILDING AND RISE PIPING UP TO 10'-0" ABOVE FINISHED FLOOR. SIZE, INSTALL, AND SUPPORT REFRIGERANT PIPING PER MANUFACTURER'S REQUIREMENTS.
5. ROUTE REFRIGERANT PIPING LOW ALONG GRADE TO EXTERIOR OF BUILDING. ENTER BUILDING AND RISE PIPING UP TO 10'-6" ABOVE FINISHED FLOOR. SIZE, INSTALL, AND SUPPORT REFRIGERANT PIPING PER MANUFACTURER'S REQUIREMENTS.
6. ROUTE REFRIGERANT PIPING ABOVE CEILING HEIGHT AND DROP DOWN FOR CONNECTION TO MINISPLIT AIR HANDLING UNIT.
7. ROUTE REFRIGERANT PIPING HIGH, TIGHT TO STRUCTURE AND DROP DOWN FOR CONNECTION TO MINISPLIT AIR HANDLING UNIT.
8. ROUTE CONDENSATE PIPING TO NEAREST FLOOR DRAIN.
9. ROUTE CONDENSATE PIPING FOR CONNECTION TO LAVATORY SANITARY PIPING PER DETAIL.

REVISIONS	
DATE	BY
4/17/26	JFC

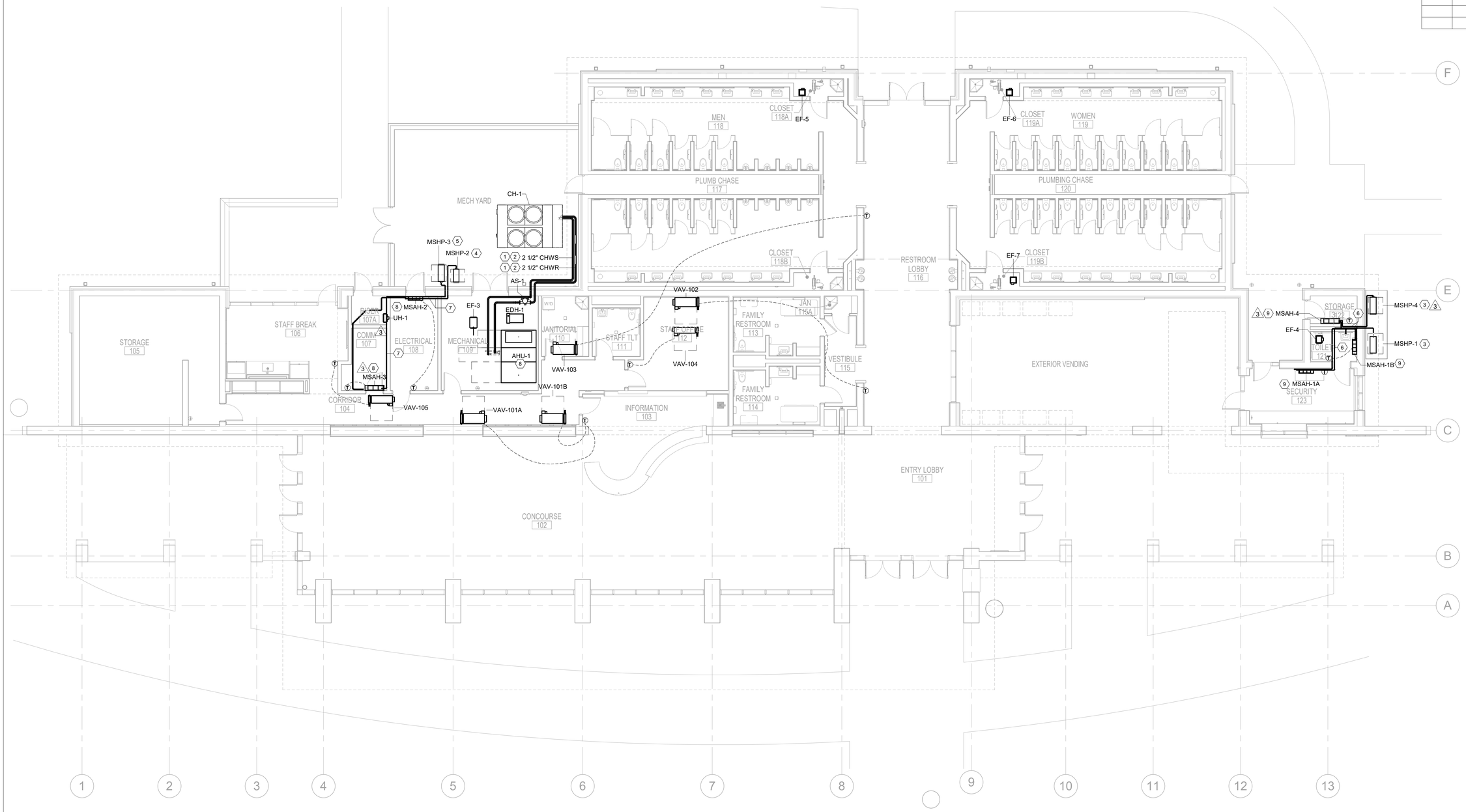

1 M200 E400 FLOOR PLAN - GROUND LEVEL - HVAC PIPING
1/8" = 1'-0"

8' 0' 8' 16'
SCALE: 1/8"=1'-0"

DANNY HAROLD WARREN
LICENSED PROFESSIONAL ENGINEER
1-30-2026
19999
STATE OF MISSISSIPPI

ADDENDUM

DESIGNED BY:	JFC
DETAILED BY:	JFC
CHECKED BY:	DHW
DATE:	January 30, 2026
FMS CON.	109171-301000
PROJECT NO.	18-023a
COUNTY	JACKSON

I-10 JACKSON COUNTY WELCOME CENTER

FLOOR PLAN - HVAC PIPING

SHEET ID: M200

SHEET NO. 8704

EXHAUST FAN SCHEDULE

MARK	MODEL	MANUFACTURER	AREA/SYSTEM SERVED	TYPE	SCFM @ 70°F	ESP (IN W.C.)	FAN RPM	ELECTRICAL								DRIVE TYPE	VFD (Y/N)	DAMPER TYPE	VIBRATION ISOLATORS (Y/N)	ROOF/WALL OPENING (IN)	WEIGHT (LBS)	COMMENTS
								MOTOR HP	MOTOR WATTS	MOTOR RPM	VOLTAGE (V)	PHASE	HZ	FLA (A)	POWER TYPE							
EF-1	G-100-VG	GREENHECK	GENERAL EXHAUST	CENTRIFUGAL ROOF FAN	1000	0.50	1485	0.25	[redacted]	1725	115	1	60	2.85	NORMAL	DIRECT	CONSTANT	GRAVITY	No	18 x 18	80	1,2,7,8
EF-2	G-100-VG	GREENHECK	GENERAL EXHAUST	CENTRIFUGAL ROOF FAN	1000	0.50	1485	0.25	[redacted]	1725	115	1	60	2.85	NORMAL	DIRECT	CONSTANT	GRAVITY	No	18 x 18	80	1,2,7,8
EF-3	SQ-98-VG	GREENHECK	GENERAL EXHAUST	SQUARE IN-LINE FAN	350	0.50	1377	0.25	[redacted]	1725	115	1	60	4.30	NORMAL	DIRECT	CONSTANT	GRAVITY	Yes	N/A	50	1,2
EF-4	SP-A90	GREENHECK	GENERAL EXHAUST	CEILING EXHAUST FAN	77	0.26	900	[redacted]	15	[redacted]	115	1	60	0.17	NORMAL	DIRECT	CONSTANT	GRAVITY	Yes	N/A	20	1,3
EF-5	SP-LP0511	GREENHECK	GENERAL EXHAUST	CEILING EXHAUST FAN	35	0.64	685	[redacted]	12	[redacted]	115	1	60	0.29	NORMAL	DIRECT	CONSTANT	GRAVITY	No	N/A	10	1,3
EF-6	SP-LP0511	GREENHECK	GENERAL EXHAUST	CEILING EXHAUST FAN	35	0.64	685	[redacted]	12	[redacted]	115	1	60	0.29	NORMAL	DIRECT	CONSTANT	GRAVITY	No	N/A	10	1,3
EF-7	SP-LP0511	GREENHECK	GENERAL EXHAUST	CEILING EXHAUST FAN	35	0.64	685	[redacted]	12	[redacted]	115	1	60	0.29	NORMAL	DIRECT	CONSTANT	GRAVITY	No	N/A	10	1,3
EF-8	SE1-12-432-VG	GREENHECK	VENTILATION	SIDEWALL PROPELLER FAN	400	0.25	1069	0.25	[redacted]	1725	115	1	60	2.85	NORMAL	DIRECT	CONSTANT	MOTORIZED	No	19.25 x 19.25	90	1,4,5,6,7,8,9

COMMENTS:

1. EC MOTOR W/ FAN SPEED CONTROLLER.
2. INTERLOCK W/ RESPECTIVE AIR HANDLER.
3. INTERLOCK W/ LIGHTSWITCH.
4. ON-OFF SWITCH CONTROL.
5. INTERLOCK W/ RESPECTIVE MOTORIZED DAMPERS.
6. PROVIDE WITH MOTORIZED DAMPERS.
7. INSTALLATION SHALL BE RATED FOR CODE REQUIRED HIGH WIND LOAD RATING FOR THIS REGION.
8. PROVIDE WITH PROTECTIVE COATING (LABCOAT) FOR HARSH COASTAL CONDITIONS.
9. PROVIDE WITH INSECT SCREEN.

3 BUILD AMERICA, BUY AMERICA ACT (BABA)

A. THIS PROJECT IS SUBJECT TO THE BUILD AMERICA, BUY AMERICA ACT (BABA), 41 U.S.C. §§ 8301–8305.

B. REFER TO SPECIFICATION SECTION 016000 AND MECHANICAL SPECIFICATIONS FOR REQUIREMENTS.

REVISIONS

	DATE	BY
3	4/17/26	JFC

AIR-COOLED CHILLER SCHEDULE

MARK	MANUFACTURER	MODEL	UNIT NOMINAL TONS	CAPACITY TONS	FULL LOAD EER	IPLV EER	REFRIGERANT TYPE	# OF REFRIGERANT CIRCUITS	LOCATION	WEIGHT (LB)	A-WEIGHTED SOUND PRESSURE (DBA)	EVAPORATOR							COMPRESSORS				CONDENSER			ELECTRICAL								PUMP PACKAGE						COMMENTS
												FLUID TYPE	DESIGN GPM	MINIMUM GPM	WATER TEMPERATURE ENTERING (°F)	WATER TEMPERATURE LEAVING (°F)	FOULING FACTOR	WATER P.D. (FT H20)	COMPRESSOR TYPE	NOMINAL SIZE (TONS)	MINIMUM QUANTITY	MINIMUM CAPACITY STEPS (%)	CONDENSER FAN QTY	AMBIENT AIR TEMP (°F)	MINIMUM OPERATING TEMP (°F)	VOLTAGE (V)	HZ	PHASE	MCA	MOCP	COMPRESSOR RLA (AMPS)	SHORT CIRCUIT CURRENT RATING (AMPS)	UNIT MOUNTED STARTER (Y/N)	PUMP TYPE	PUMP SIZE (HP)	AVAILABLE HEAD PRESSURE (FT H2O)	TOTAL PRESSURE DROP (FT H20)	EXPANSION TANK VOLUME (GAL)	BUFFER TANK VOLUME (GAL)	
CH-1	TRANE	CGAM040	40	41.1	11.84	16.87	R-454B	2	MECH YARD	6300	89	WATER	70.29	58	58.00	44.00	0.000100	7.67	SCROLL	10.0 / 10.0 / 10.0 / 10.0	4	25%	4	95.0	0	460	60	3	101	125	18.6 / 18.6 / 18.6 / 18.6	5000	Yes	DUAL HIGH HEAD	5	77.60	9.07	5.0	140.0	ALL

COMMENTS:

1. MICROPROCESSOR BASED CONTROL WITH BACNET INTERFACE
2. FLOW SWITCH
3. SUPER QUIET SOUND ATTENUATION PACKAGE
4. NEOPRENE ISOLATORS
5. ARCHITECTURAL LOUVERED PANELS
6. FACTORY INSTALLED FREEZE PROTECTION
7. LOW AMBIENT HEAD PRESSURE CONTROL
8. HIGH HUMIDITY INSULATION PACKAGE
9. SINGLE POINT ELECTRICAL CONNECTION
10. FACTORY INSTALLED POWER DISCONNECT
11. PROVIDE WITH HIGH SHORT CIRCUIT CURRENT RATING
12. CONVENIENCE OUTLET
13. REFER TO SPECIFICATIONS FOR ADDITIONAL CHILLER REQUIREMENTS
14. PROVIDE ALL COILS WITH PROTECTIVE COATING RATED FOR HARSH COASTAL CONDITIONS EQUAL TO TRANE COMPLETECOAT

AIR HANDLING UNIT SCHEDULE

MARK	MODEL	MANUFACTURER	LOCATION	SUPPLY CFM	DESIGN OA CFM	FILTER	COOLING COIL														SUPPLY FAN								ELECTRICAL SERVICE					OPERATING WEIGHT (LBS)	COMMENTS
							FLUID TYPE	MAX FACE VELOCITY (FPM)	AIRSIDE PRESSURE DROP (IN W.G.)	ENTERING AIR TEMP DB (°F)	ENTERING AIR TEMP WB (°F)	LEAVING AIR TEMP DB (°F)	LEAVING AIR TEMP WB (°F)	COOLING CAPACITY TOTAL (MBH)	COOLING CAPACITY SENSIBLE (MBH)	CHILLED WATER ENTERING TEMP (°F)	CHILLED WATER LEAVING TEMP (°F)	CHILLED WATER FLOW (GPM)	WATER P.D. (FT H2O)	COIL ROWS	FOULING FACTOR	FAN TYPE	DRIVE TYPE	E.S.P (IN W.C.)	T.S.P. (IN W.C.)	FAN RPM	FAN QTY.	MOTOR HP	MOTOR RPM	VOLTAGE	PHASE	HZ	VFD	POWER TYPE		
AHU-1	CSAA017	TRANE	MECH ROOM	8,290	3,860	MERV-8	100% WATER	493	0.91	83.3	70.5	53.0	52.9	463.6	277.8	44.0	58.0	66.0	17.39	6	0.00000	PLENUM	DIRECT DRIVE	2.00	4.12	1,970	1	10	1,800	460	3	60	Yes	NORMAL	1,950	ALL

COMMENTS:

1. 2" INTEGRAL SPRING ISOLATORS.
2. OUTSIDE AIR & RETURN AIR MOTORIZED DAMPERS BY AHU MANUFACTURER.
3. MAGNEHELIC FILTER GAUGES FOR ALL FILTERS.
4. LOW FLOW TRAQ DAMPERS FOR MEASURING MINIMUM OUTSIDE AIR & ECONOMIZER OUTSIDE AIR SEPARATELY.
5. BAS INTERFACE AND CONTROL.
6. SUPPLY AND RETURN SMOKE DETECTORS.
7. FREEZE STAT SAFETY.
8. PROVIDE ACCESS DOORS ON EACH SECTION INCLUDING BOTH SIDES FOR PLENUM FAN ARRAYS.
9. PROVIDE SOUND ABSORBING WALLS IN FAN AND DISCHARGE PLENUM SECTIONS .
10. FAN MOTORS SHALL BE PREMIUM HIGH EFFICIENCY TYPE.
11. OVER SPEEDING OF FAN MOTOR VFD SHALL BE LIMITED TO 70 HZ.

DUCTLESS MINISPLIT INDOOR UNIT SCHEDULE

MARK	MANUFACTURER	BASED ON MANUFACTURER MODEL	CONFIGURATION	LOCATION	TOTAL CFM	COOLING CAPACITY (BTUH)	HEATING CAPACITY @ 47 °F (BTUH)	FILTER	MINIMUM OPERATING TEMP	CONDENSER PRESSURE CONTROL	ELECTRICAL SERVICE					WEIGHT (LBS)	COMMENTS
											VOLTAGE	PHASE	HZ	MCA	MOP		
3 MSAH-1A	Daikin	FTXV12AVJU9	WALL MOUNT	SECURITY	392	12,000	12,000	THROWAWAY	0	Yes	208	1	60	[redacted]		20	ALL
3 MSAH-1B	Daikin	CTXV07AVJU9	WALL MOUNT	SECURITY TOILET	332	7,000	7,000	THROWAWAY	0	Yes	208	1	60	[redacted]		20	ALL
3 MSAH-2	Daikin	FTXF12BVJU9	WALL MOUNT	ELECTRICAL	399	12,000	13,500	THROWAWAY	0	Yes	208	1	60	[redacted]		20	ALL
3 MSAH-3	Daikin	FTXC24AXVJU	WALL MOUNT	COMM	754	22,400	23,000	THROWAWAY	0	Yes	208	1	60	[redacted]		35	ALL
3 MSAH-4	Daikin	FTXC24AXVJU	WALL MOUNT	SECURITY STORAGE	754	22,400	23,000	THROWAWAY	0	Yes	208	1	60	[redacted]		35	ALL

COMMENTS:

1. PROVIDE CONDENSATE PUMPS WITH OVERFLOW PROTECTION. OVERFLOW SWITCH SHALL SHUT DOWN UNIT AND GENERATE ALARM.
2. PROVIDE WALL BRACKET FOR MOUNTING OF UNIT AND CONDENSATE PUMP.
3. PROVIDE UNIT WITH WALL MOUNTED 7-DAY PROGRAMMABLE THERMOSTAT.
4. PROVIDE WITH BACNET INTERFACE AND CONTROL.

DUCTLESS MINISPLIT OUTDOOR UNIT SCHEDULE

MARK	MANUFACTURER	BASED ON MANUFACTURER MODEL	CORRESPONDING INDOOR UNIT(S)	REFRIGERANT TYPE	ENTERING AIR TEMPERATURE		AMBIENT TEMP (°F)	COOLING CAPACITY (BTUH)	HEATING CAPACITY @ 47 °F (BTUH)	ELECTRICAL SERVICE					WEIGHT (LBS)	COMMENTS
					DB (°F)	WB (°F)				VOLTAGE	PHASE	HZ	MCA	MOP		
3 MSHP-1	Daikin	2MXM18AVJU9	MSAH-1A & 1B	R-32	80	67	95	17,200	18,500	208	1	60	15.6	20.0	130	ALL
3 MSHP-2	Daikin	RXF12BVJU9	MSAH-2	R-32	80	67	95	12,000	13,500	208	1	60	14.6	15.0	80	ALL
3 MSHP-3	Daikin	RXC24AXVJU	MSAH-3	R-32	80	67	95	22,400	23,000	208	1	60	16.3	20.0	110	ALL
3 MSHP-4	Daikin	RXC24AXVJU	MSAH-4	R-32	80	67	95	22,400	23,000	208	1	60	16.3	20.0	110	ALL

COMMENTS:

1. MECHANICAL CONTRACTOR TO PROVIDE REFRIGERANT PIPING, LINE SIZING, AUXILIARY DEVICES, AND WIRING PER MANUFACTURER'S RECOMMENDATIONS.
2. PROVIDE WITH BACNET INTERFACE AND CONTROL.

LOUVER SCHEDULE

MARK	SERVICE	MANUFACTURER	MODEL	DEPTH (IN)	DIMENSIONS WIDTH X HEIGHT (IN.)	AIR FLOW (CFM)	MAX S.P. DROP (IN. H2O)	MAX VELOCITY (FPM)	MINIMUM FREE AREA (SF)	SCREEN TYPE	MOTORIZED DAMPER INTERLOCK	EMERGENCY POWER	COMMENTS
LV-1	EXHAUST	GREENHECK	EHH-601D	6	22"x14"	350	0.07	557	0.63	BIRDSCREEN	[redacted]	No	ALL
LV-2	EXHAUST	GREENHECK	EHH-601D	6	12"x10"	77	0.06	510	0.15	BIRDSCREEN	[redacted]	No	ALL
LV-3	EXHAUST	GREENHECK	EHH-601D	6	16"x8"	35	0.02	307	0.11	BIRDSCREEN	[redacted]	No	ALL
LV-4	EXHAUST	GREENHECK	EHH-601D	6	16"x8"	35	0.02	307	0.11	BIRDSCREEN	[redacted]	No	ALL
LV-5	EXHAUST	GREENHECK	EHH-601D	6	16"x8"	35	0.02	307	0.11	BIRDSCREEN	[redacted]	No	ALL
LV-6	INTAKE	GREENHECK	EHH-601D	6	18"x18"	400	0.07	542	0.74	BIRDSCREEN	EF-8	No	ALL

COMMENTS:

1. RATED FOR WIND DRIVEN RAIN.
2. LOUVER FINISH & COLOR AS DIRECTED BY ARCHITECT.
3. PROVIDE WITH AAMA 2605 COATING OR EQUIVALENT COATING FOR PROTECTION AGAINST COASTAL CONDITIONS.

DANNY HAROLD WARREN
LICENSED PROFESSIONAL ENGINEER
1-30-2026
19999
STATE OF MISSISSIPPI

ADDENDUM

DESIGNED BY: JFC
DETAILED BY: JFC
CHECKED BY: DHW
DATE: January 30, 2026

FMS CON. 109171-301000
PROJECT NO. 18-023a
COUNTY JACKSON

I-10 JACKSON COUNTY WELCOME CENTER

MECHANICAL SCHEDULES

SHEET ID: M500

SHEET NO. 8713

3 BUILD AMERICA, BUY AMERICA ACT (BABA)

A. THIS PROJECT IS SUBJECT TO THE BUILD AMERICA, BUY AMERICA ACT (BABA), 41 U.S.C. §§ 8301–8305.

B. REFER TO SPECIFICATION SECTION 016000 AND MECHANICAL SPECIFICATIONS FOR REQUIREMENTS.

VARIABLE/CONSTANT VOLUME TERMINAL BOX SCHEDULE

MARK	MANUFACTURER	MODEL	PRIMARY INLET DIAMETER (IN.)	DESIGN COOLING AIRFLOW (CFM)	MINIMUM COOLING AIRFLOW	HEATING AIRFLOW (CFM)	MAX TERMINAL APD (IN H2O)	VOLTAGE AND PHASE	TOTAL KW	STAGES	ENTERING AIR TEMP (°F)	LEAVING AIR TEMP (°F)	MAX. DISCHARGE NC	COMMENTS
VAV-101A	TRANE	VCEF	14"	1800	540	900	0.5	480/3	11.00	2	52.0	90.0	35	ALL
VAV-101B	TRANE	VCEF	14"	1800	540	900	0.5	480/3	11.00	2	52.0	90.0	35	ALL
VAV-102	TRANE	VCEF	12"	1270	385	635	0.5	480/3	8.00	2	52.0	90.0	35	ALL
VAV-103	TRANE	VCEF	14"	1770	535	885	0.5	480/3	11.00	2	52.0	90.0	35	ALL
VAV-104	TRANE	VCEF	8"	495	150	250	0.5	277/1	3.50	1	52.0	90.0	35	ALL
VAV-105	TRANE	VCEF	10"	1155	350	580	0.5	480/3	7.00	2	52.0	90.0	35	ALL

COMMENTS:

1. PROVIDE NECESSARY CLEARANCE FOR MAINTENANCE.
2. INSTALL ACCESS PANELS FOR TERMINAL UNITS LOCATED ABOVE INACCESSIBLE CEILINGS.

ELECTRIC DUCT HEATER SCHEDULE

MARK	MODEL	MANUFACTURER	ASSOCIATED INDOOR UNIT	TOTAL KW	FLOW (CFM)	FACE VELOCITY (FPM)	MINIMUM REQUIRED AIRSIDE PRESSURE DROP (IN W.C.)	ENTERING AIR TEMP (°F)	LEAVING TEMP D.B. (°F)	NO. STEPS	ELECTRICAL SERVICE			WEIGHT (LB)	COMMENTS
											VOLTAGE	PHASE	AMPS		
EDH-1	E-SERIES	TUTCO	AHU-1	33	3860	1508	0.05	28.4	52.0	SCR	480	3	40	30	ALL

COMMENTS:

1. PROVIDE FACTORY MOUNTED FUSED DISCONNECT FOR EACH HEATER.
2. PROVIDE AIR PRESSURE DIFFERENTIAL PRESSURE SWITCH AND CONTACTOR FOR EACH HEATER.
3. PROVIDE HIGH LIMIT CUTOUT FOR EACH HEATER.
4. PROVIDE ACCESS DOOR AT EACH HEATER.
5. HEATERS SHALL BE UL LISTED FOR SERVICE.
6. INTERLOCK WITH ASSOCIATED AIR HANDLING UNIT.

GRAVITY INTAKE/RELIEF HOOD SCHEDULE

MARK	MANUFACTURER	MODEL	UNIT SERVED	SERVICE	TYPE	DESIGN AIRFLOW (CFM)	MAX PD (IN. W.C.)	THROAT AREA (SF)	THROAT VELOCITY (FPM)	ROOF OPENING (IN)	WEIGHT (LB)	COMMENTS
IH-1	GREENHECK	GRSI	AHU-1	INTAKE	DUCTED	3860	0.071	7.29	530	39.0	100	ALL

COMMENTS:

1. PROVIDE WITH 12" ROOF CURB.
2. PROVIDE WITH BIRD AND INSECT SCREEN.

ELECTRIC UNIT HEATER SCHEDULE

MARK	MODEL	MANUFACTURER	LOCATION	TYPE	DISCHARGE	E.A.D.B. (°F)	L.A.D.B. (°F)	FLOW (CFM)	CAPACITY (KW)	CAPACITY (BTUH)	VOLTAGE	PHASE	HZ	AMPS	COMMENTS
UH-1	3450	MARKEL	107A - RISER	WALL MOUNTED	HORIZONTAL	70.0	95.0	245	2.0	6,826	208	1	60	9.6	1,2
UH-2	5100	MARKEL	STORAGE BUILDING	SUSPENDED	HORIZONTAL	60.0	103.0	1100	15.0	51,200	208	3	60	42.9	1,2,3

COMMENTS:

1. PROVIDE MANUFACTURER AND MODEL SPECIFIED OR APPROVED EQUAL.
2. PROVIDE FACTORY SUPPLIED LOW VOLTAGE THERMOSTAT AND LOW VOLTAGE CONTROL.
3. MOUNT UNIT 11'-0" ABOVE FINISHED FLOOR.

ELECTRIC HEAT TRACE SCHEDULE

MARK	MANUFACTURER	SERVICE	PIPE DIAMETER (IN)	APPROX PIPE LENGTH (FT)	HEAT OUTPUT (W/FT)	VOLT	PHASE	HZ	COMMENTS
HT-M1	RAYCHEM	CHILLED WATER	2.5	50'	5	277	1	60	ALL

COMMENTS:

1. INDICATED LENGTHS ARE APPROXIMATE.
2. CONTRACTOR SHALL VERIFY LENGTHS & PROVIDE SHOP DRAWINGS PER SPECIFICATIONS.

AIR SEPARATOR SCHEDULE

MARK	MANUFACTURER	MODEL	CONNECTIONS		RATED GPM	FLOW COEFFICIENT (Cv)	PRESSURE DROP (FT HEAD)	MAX OPERATING TEMP (°F)	MAX PRESSURE (PSIG)	DIMENSIONS				COMMENTS
			TYPE	SIZE (IN)						HEIGHT (IN)	LENGTH (IN)	WIDTH (IN)	WEIGHT (LBS)	
AS-1	Bell & Gossett	RL-3FB	FLANGE	3	190	215	0.24	350	125	27	23	13	173	ALL

COMMENTS:

1. VERTICAL MOUNT TANK.
2. SET AIR SEPARATORS ON 4" HOUSEKEEPING PAD.

LOUVERED FACE CEILING DIFFUSER SCHEDULE

MARK	MANUFACTURER	MODEL	ADAPTER/ NECK SIZE	FACE SIZE	MAX CFM	MAX NC	MAX SP	THROW	RUN-OUT SIZE
SA	TITUS	TDCAA	6"Ø / 6"x6"	12"x12"	100	25	0.1	4-WAY	6"Ø / 8"x6"
SB	TITUS	TDCAA	8"Ø / 9"x9"	15"x15"	200	25	0.1	4-WAY	8"Ø / 10"x6"
SC	TITUS	TDCAA	10"Ø / 12"x12"	15"x15"	400	25	0.1	4-WAY	10"Ø / 12"x8"
SD	TITUS	TDCAA	12"Ø / 15"x15"	24"x24"	600	25	0.1	4-WAY	12"Ø / 14"x8"
SE	TITUS	TDCAA	6"Ø / 6"x6"	12"x12"	100	25	0.1	3-WAY	6"Ø / 8"x6"
SF	TITUS	TDCAA	8"Ø / 9"x9"	15"x15"	200	25	0.1	3-WAY	8"Ø / 10"x6"
SG	TITUS	TDCAA	10"Ø / 12"x12"	15"x15"	400	25	0.1	3-WAY	10"Ø / 12"x8"
SH	TITUS	TDCAA	12"Ø / 15"x15"	24"x24"	600	25	0.1	3-WAY	12"Ø / 14"x8"
SI	TITUS	TDCAA	6"Ø / 6"x6"	12"x12"	100	25	0.1	2-WAY	6"Ø / 8"x6"
SJ	TITUS	TDCAA	8"Ø / 9"x9"	15"x15"	200	25	0.1	2-WAY	8"Ø / 10"x6"
SK	TITUS	TDCAA	10"Ø / 12"x12"	15"x15"	400	25	0.1	2-WAY	10"Ø / 12"x8"
SL	TITUS	TDCAA	12"Ø / 15"x15"	24"x24"	600	25	0.1	2-WAY	12"Ø / 14"x8"
SM	TITUS	TDCAA	6"Ø / 6"x6"	12"x12"	100	25	0.1	1-WAY	6"Ø / 8"x6"
SN	TITUS	TDCAA	8"Ø / 9"x9"	15"x15"	200	25	0.1	1-WAY	8"Ø / 10"x6"
SO	TITUS	TDCAA	10"Ø / 12"x12"	15"x15"	400	25	0.1	1-WAY	10"Ø / 12"x8"
SP	TITUS	TDCAA	12"Ø / 15"x15"	24"x24"	600	25	0.1	1-WAY	12"Ø / 14"x8"
SQ	TITUS	TDCAA	6"Ø / 6"x6"	12"x12"	100	25	0.1	2-W CORNER	6"Ø / 8"x6"
SR	TITUS	TDCAA	8"Ø / 9"x9"	15"x15"	200	25	0.1	2-W CORNER	8"Ø / 10"x6"
SS	TITUS	TDCAA	10"Ø / 12"x12"	15"x15"	400	25	0.1	2-W CORNER	10"Ø / 12"x8"
ST	TITUS	TDCAA	12"Ø / 15"x15"	24"x24"	600	25	0.1	2-W CORNER	12"Ø / 14"x8"

COMMENTS:

1. CONTRACTOR HAS OPTION OF USING 24" X 24" FACE FOR MOUNTING IN ACOUSTICAL TILE CEILING.
2. USE DUCT SPIN-IN FITTING AND MANUAL VOLUME DAMPER EQUAL TO GENFLEX MODEL SM-2DEL. PROVIDE OPPOSED BLADE DAMPER CONTROL AT FACE OF REGISTER WHERE DAMPER IS NOT ACCESSIBLE.
3. ANY THROW PATTERN INDICATED ON HVAC DRAWINGS SHALL TAKE PRECEDENCE OVER CONTRADICTIONS THAT MAY EXIST ON THIS SCHEDULE.

EGG GRATE RETURN AND EXHAUST REGISTERS

MARK	MANUFACTURER	MODEL	ADAPTER/ NECK SIZE	FACE SIZE	MAX CFM	MAX SP	MAX NC	RUN-OUT SIZE
RA / EA	TITUS	50F	6" SQ	8" x 8"	75	0.03	20	6"Ø / 8"x6"
RB / EB	TITUS	50F	8" SQ	10" x 10"	200	0.03	20	8"Ø / 10"x6"
RC / EC	TITUS	50F	10" SQ	12" x 12"	300	0.03	20	10"Ø / 12"x8"
RD / ED	TITUS	50F	12" SQ	14" x 14"	500	0.03	20	12"Ø / 14"x8"
RE / EE	TITUS	50F	14" SQ	18" x 18"	700	0.03	20	14"Ø / 16"x8"
RF / EF	TITUS	50F	18" SQ	20" x 20"	1200	0.03	20	16"Ø / 24"x10"
RG / EG	TITUS	50F	22" SQ	24" x 24"	1800	0.03	20	18"Ø / 24"x12"

COMMENTS:

1. CONTRACTOR HAS OPTION OF USING 24" X 24" PANEL FOR MOUNTING IN ACOUSTICAL TILE CEILING.
2. USE DUCT SPIN-IN FITTING AND MANUAL VOLUME DAMPER EQUAL TO GENFLEX MODEL SM-2DEL FOR ROUND DUCT AND STANDARD SIDE TAKE OFF WITH MANUAL VOLUME DAMPER FOR RECTANGULAR RUN-OUTS.
3. PROVIDE OPPOSED BLADE CONTROL AT FACE OF REGISTER WHERE DAMPER IS NOT ACCESSIBLE.

DANNY HAROLD WARREN
LICENSED PROFESSIONAL ENGINEER
1-30-2026
19999
STATE OF MISSISSIPPI

REVISIONS

DATE	BY
3 4/17/26	JFC

ADDENDUM

DESIGNED BY: JFC
DETAILED BY: JFC
CHECKED BY: DHW
DATE: January 30, 2026

FMS CON. 109171-301000
PROJECT NO. 18-023a
COUNTY JACKSON

I-10 JACKSON COUNTY WELCOME CENTER

MECHANICAL SCHEDULES

SHEET ID: M501

SHEET NO. 8714

REVISIONS	
DATE	BY
4/17/26	CAB

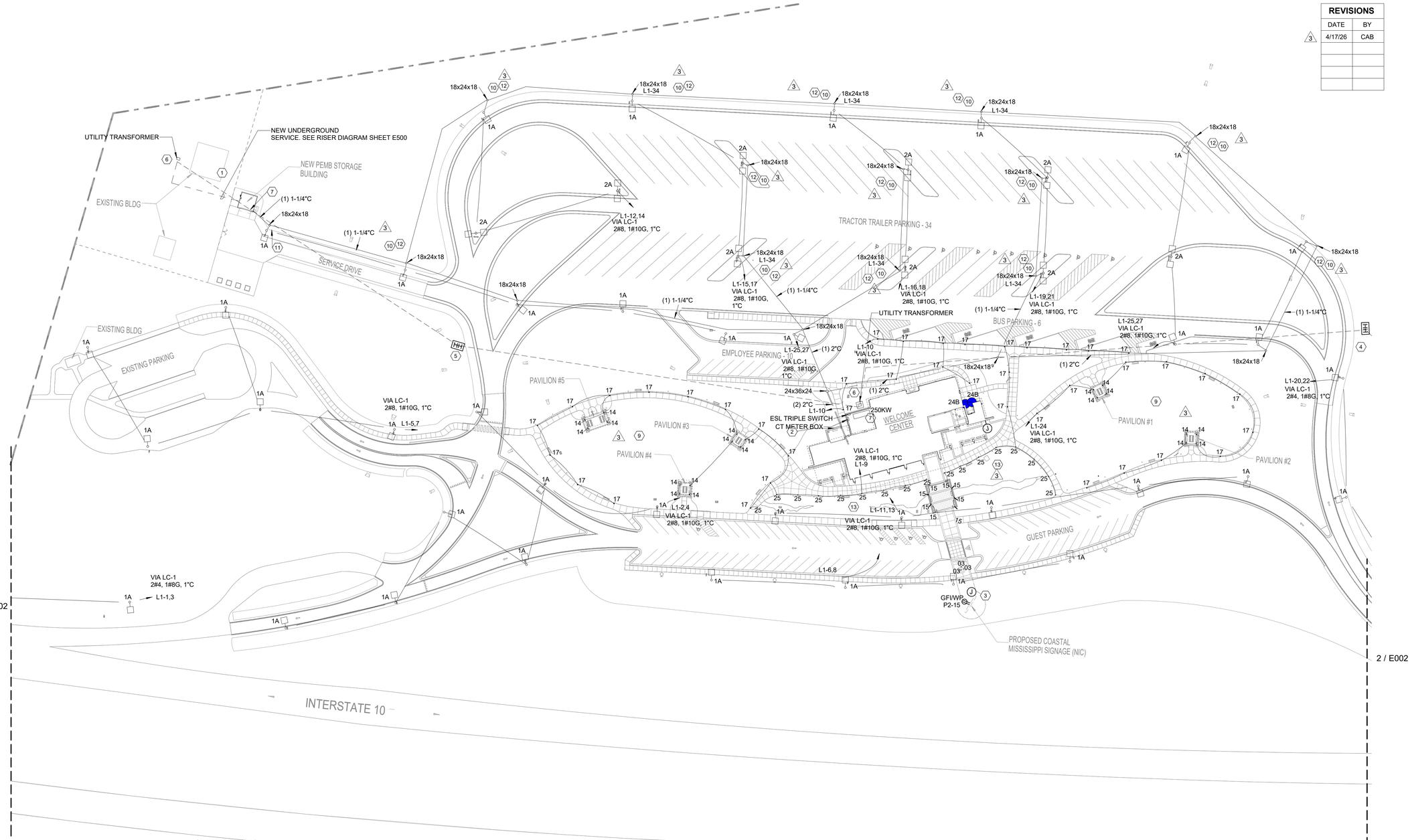

GENERAL SITE NOTES:

A. THE EXISTING UTILITY LOCATIONS ARE SHOWN FOR GENERAL INFORMATION ONLY AND ARE NOT GUARANTEED TO BE EITHER ACCURATE OF ALL INCLUSIVE. PRIOR TO EXCAVATION IN ANY AREA, OBTAIN THE AID OF ALL UTILITY OWNERS TO IDENTIFY AND LOCATE THEIR RESPECTIVE FACILITIES. ANY UTILITY DAMAGE CAUSE BY THE CONSTRUCTION ACTIVITIES SHALL BE REPAIRED OR REPLACED AT NO EXPENSE TO THE OWNER.

B. EXISTING UTILITIES, WHICH ARE NOT SHOWN, THAT ARE DISCOVERED DURING EXCAVATION SHALL BE BROUGHT TO THE ATTENTION OF THE OWNER'S REPRESENTATIVE FOR PROPER COORDINATION. REMOVE, REWORK AND/OR REROUTE THE EXISTING UTILITIES, AS DIRECTED BY THE OWNER'S REPRESENTATIVE.

C. CONTRACTOR TO PAY ALL COSTS AND FEES (CAPACITY, TAP, INSPECTION, ETC.) ASSOCIATED WITH UTILITY SERVICES.

D. ALL ELECTRICAL CONDUITS INSTALLED AROUND THE SITE TO BE INSTALLED WITH PULL STRING WITH FOOTAGE MARKS.

SITE KEYED NOTES:

1. ROUTE (1) 2" CONDUIT FROM MAINTENANCE BUILDING TO FACP IN SECURITY OFFICE. INSTALL (1) 6 STRAND SINGLE MODE FIBER TO CONNECT FACP TO FIRE ALARM PANEL IN MAINTENANCE BUILDING.
2. STUB TWO 3" CONDUITS UP IN COMMUNICATION ROOM AND ROUTE OUT FOR COMMUNICATIONS DEMARK. STUB CONDUITS UP ABOVE CONCRETE IN MECHANICAL YARD. COORDINATE EXACT LOCATION WITH OWNER.
3. INSTALL JUNCTION BOX AND SPARE CIRCUIT AT SIGN FOR FUTURE LIGHTING.
4. INSTALL THREE 2-1/2" CONDUITS FROM UTILITY POWER POLE TO NEW UTILITY TRANSFORMER PAD. STUB UP 90S AT THE HALFWAY POINT FOR UTILITY COMPANY PROVIDED AND INSTALLED ABOVE GROUND PULL BOX. COORDINATE FINAL LOCATION WITH CIVIL ENGINEER IN THE FIELD.
5. INSTALL THREE 2-1/2" CONDUITS BETWEEN THE TWO NEW UTILITY TRANSFORMER PADS. STUB UP 90S AT THE HALFWAY POINT FOR UTILITY COMPANY PROVIDED AND INSTALLED ABOVE GROUND PULL BOX. COORDINATE FINAL LOCATION WITH CIVIL ENGINEER IN THE FIELD.
6. INSTALL CONCRETE TRANSFORMER PAD PER SINGING RIVER ELECTRIC REQUIREMENTS. REFER TO CIVIL DRAWINGS UTIL-21 FOR TRANSFORMER PAD DETAIL.
7. PROVIDE A 6 STRAND OM4/OM5 FIBER CABLE BACK TO THE MAIN TELECOM ROOM. PROVIDE A WALL MOUNTED FIBER INTERFACE CABINET ON EAST WALL OF THE PEMB. SEE SHEET T901 DETAIL #4 AND SHEET E102 FOR ADDITIONAL INFORMATION.
8. INSTALL CONCRETE PAD FOR GENERATOR, CORRDINATE EXACT SIZE OF PAD BASED ON APPROVED GENERATOR, FUEL TANK SUBMITTAL.
9. ALL #17 FIXTURES TO BE INSTALLED SO THE FLAT FACE OF THE FIXTURE IS PARALLEL TO THE SIDEWALK OR CURB. INSTALL POLE BASE 2" FROM THE EDGE OF THE SIDE WALK AND THE BACK SIDE OF THE FIXTURE 4" FROM THE THE EDGE OF THE SIDE WALK.
10. INSTALL ONE (1) 1" CONDUIT WITH A DEDICATED 277 VOLT CIRCUIT TO THE POLE BASE HAND HOLE FOR SECURITY CAMERA POWER.
11. PROVIDE (1) CAT 6 CABLE FOR POLE MOUNTED CAMERA. ROUTE CABLE TO THE FIBER INTERFACE CABINET LOCATED IN THE PEMB STORAGE BUILDING. SEE SHEET T000 FOR CAMERA SCHEDULE.
12. INSTALL ONE (1) 1-1/4" CONDUIT WITH PULL STRING TO POLE BASE HAND HOLE FOR FUTURE TPAS SYSTEM.
13. INSTALL BOLLARD FIXTURE 4" FROM THE THE EDGE OF THE SIDE WALK.

NORTH

1 / E001 | E402 SITE PLAN - ELECTRICAL
1" = 60'-0"

CHARLES WAYNE PARKMAN
REGISTERED PROFESSIONAL ENGINEER
12447
1-30-26
STATE OF MISSISSIPPI

ADDENDUM

DESIGNED BY:	Designer
DETAILED BY:	LVW
CHECKED BY:	CWF
DATE:	January 30, 2026

FMS CON.	109171-301000
PROJECT NO.	18-023a
COUNTY	JACKSON

I-10 JACKSON COUNTY WELCOME CENTER

SITE PLAN - ELECTRICAL

SHEET ID: E001

SHEET NO. 8801

POWER GENERAL NOTES:

A. UNLESS OTHERWISE NOTED, 120V, 20A/1P BREAKERS SHALL UTILIZE #12 AWG CONDUCTORS. EXCEPTION: WHERE BRANCH CIRCUIT IS IN EXCESS OF 125 LINEAR FEET, CONDUCTORS SHALL BE #10 AWG. EQUIPMENT GROUNDING CONDUCTOR SHALL MATCH PHASE CONDUCTOR FOR 20A/1P CIRCUITS.

B. BRANCH CIRCUIT CONDUCTORS SIZED TO PREVENT VOLTAGE DROP MAY BE REDUCED IN SIZE AS LOAD SUPPLIED BY REMAINING CIRCUIT DECREASES. VOLTAGE DROP SHALL NOT EXCEED THREE PERCENT AT THE FARTHEST BRANCH CIRCUITS.

C. MULTIWIRE BRANCH CIRCUITS SHALL BE INSTALLED PER ARTICLE 210.4 OF THE NEC. EACH MULTIWIRE CIRCUIT SHALL BE PROVIDED WITH A MEANS THAT WILL SIMULTANEOUSLY DISCONNECT ALL UNGROUNDED CONDUCTORS AT THE POINT WHERE THE BRANCH CIRCUIT ORIGINATES. I.E. BREAKER HANDLE-TIE.

D. MAINTAIN A MINIMUM SEPARATION OF 12" BETWEEN CENTERLINE OF ALL RECEPTACLES SET INTO OPPOSITE SIDES OF ALL SOUND ISOLATION WALLS. WHERE ABOVE NOTED CONDITION OCCURS AND REQUIRES A CONDUIT CONNECTION BETWEEN BOXES, UTILIZE FLEXIBLE TYPE CONDUIT.

E. DEVICES INDICATED ON THIS DRAWINGS ARE DIAGRAMMATICAL ONLY. CONTRACTOR SHALL REFER TO ARCHITECTURAL ELEVATIONS FOR LOCATIONS OF OUTLETS, DEVICES, ETC. PRIOR TO ROUGH-IN.

F. REFERENCE MECHANICAL DRAWINGS FOR EXACT LOCATIONS AND QUANTITIES OF DUCT SMOKE DETECTORS, FIRE/SMOKE DAMPERS AND SMOKE CONTROL DAMPERS.

G. CONTRACTOR TO UPDATE PANEL DIRECTORY UPON COMPLETION. NEW AND REUSED CIRCUITS ARE TO BE DISTINGUISHED FROM EXISTING AND NOT RE-USED CIRCUITS BY THE USE OF A BOLD TYPE FONT.

H. EXTEND RELOCATED MECHANICAL EQUIPMENT CONNECTIONS AS REQUIRED. COORDINATE WITH MECHANICAL CONTRACTOR.

I. ALL MECHANICAL AND PLUMBING EQUIPMENT THAT IS REQUIRED TO HAVE POWER AND/OR DATA CONTROLS CABLING TO FUNCTION SHALL BE WIRED ACCORDINGLY, WHETHER SHOWN ON THE DRAWINGS OR NOT, TO MEET THE MANUFACTURER'S REQUIREMENTS TO ENSURE A FULLY OPERATIONAL AND FUNCTIONAL INSTALLATION.

J. ALL EQUIPMENT LOCATED OUTDOORS OR AT THE EXTERIOR OF THE BUILDING SHALL BE WEATHER/OUTDOOR RATED.

K. ALL OUTLETS/RECEPTACLES IN WET AREAS, INCLUDING BUT NOT LIMITED TO, RESTROOMS, JANITORS CLOSETS, FOOD SERVICE AREAS INCLUDING BREAKROOM COUNTERS, SHALL BE GFCI RATED WHETHER SHOWN ON THE DRAWINGS OR NOT.

POWER KEYED NOTES:

1. ALL ELECTRICAL OUTLETS IN VANITY AREA TO BE FED FROM GFI BREAKERS. SEE PANEL SCHEDULES.
2. ALL ELECTRICAL OUTLETS FOR VENDING MACHINES IN COURTYARD TO BE FED FROM GFI BREAKERS. SEE PANEL SCHEDULES.
3. ALL ELECTRICAL OUTLETS FOR DRINKING FOUNTAINS TO BE FED FROM GFI BREAKERS. SEE PANEL SCHEDULES.
4. J-BOX FOR HEAT TRACE CONNECTION. COORDINATE WITH MECHANICAL DRAWINGS.
5. INSTALL A 3/4" CONDUIT FROM THE TWO ADA PUSH PADS TO STORE FRONT FRAME FOR AUTOMATIC DOOR. COORDINATE DOOR HARDWARE REQUIREMENTS WITH ARCHITECTURAL DOOR HARDWARE SCHEDULE.
6. INSTALL GREEN #2 COPPER CONDUCTOR FROM MDP TO THE PRIMARY BONDING BUSBAR (PBB) IN THE ELECTRICAL ROOM.
7. INSTALL GREEN #2 COPPER CONDUCTOR FROM THE TELECOMMUNICATIONS BONDING BUSBAR (TBB) IN THE COMMUNICATIONS ROOM TO THE PRIMARY BONDING BUSBAR (PBB) IN THE ELECTRICAL ROOM.
8. COORDINATE EXACT LOCATION OF FLOOR BOXES WITH ARCHITECTURAL DRAWINGS.
9. INSTALL DUAL CIRCUIT QUAD RECEPTACLES 15'0" AFF BEHIND MONITOR DISPLAY. COORDINATE EXACT LOCATIONS WITH AV SUPPLIER INSTALLATION MANUAL.
10. COORDINATE EXACT LOCATION OF ADULT CHANGING STATION JUNCTION BOX WITH OWNER PROVIDED ADULT CHANGING STATION MANUFACTURER INSTALLATION MANUAL. ELECTRICAL CONTRACTOR TO CONNECT POWER AFTER INSTALLATION.
11. COORDINATE EXACT LOCATION OF POWER JUNCTION BOX WITH SIGN SUPPLIER.
12. INSTALL RECEPTACLE FOR CCTV MONITOR 72" AFF. COORDINATE EXACT LOCATION WITH OWNER.
13. IRRIGATION CONTROLS POWER
14. ELECTRIC CONTRACTOR TO PROVIDE AND INSTALL 300KW GENERATOR WITH 72 HOUR DIESEL BELLY TANK
15. INSTALL (4) 3" SLEEVES THROUGH WALL FOR TEMPORARY GENERATOR CONNECTION TO TRIPLE SWITCH.
16. INSTALL EL-451 TRANSFORMER FOR OPERATION OF SLOAN AUTOMATIC FLUSH VALVES. ONE TRANSFORMER TO OPERATE (5) FLUSH VALVES.
17.

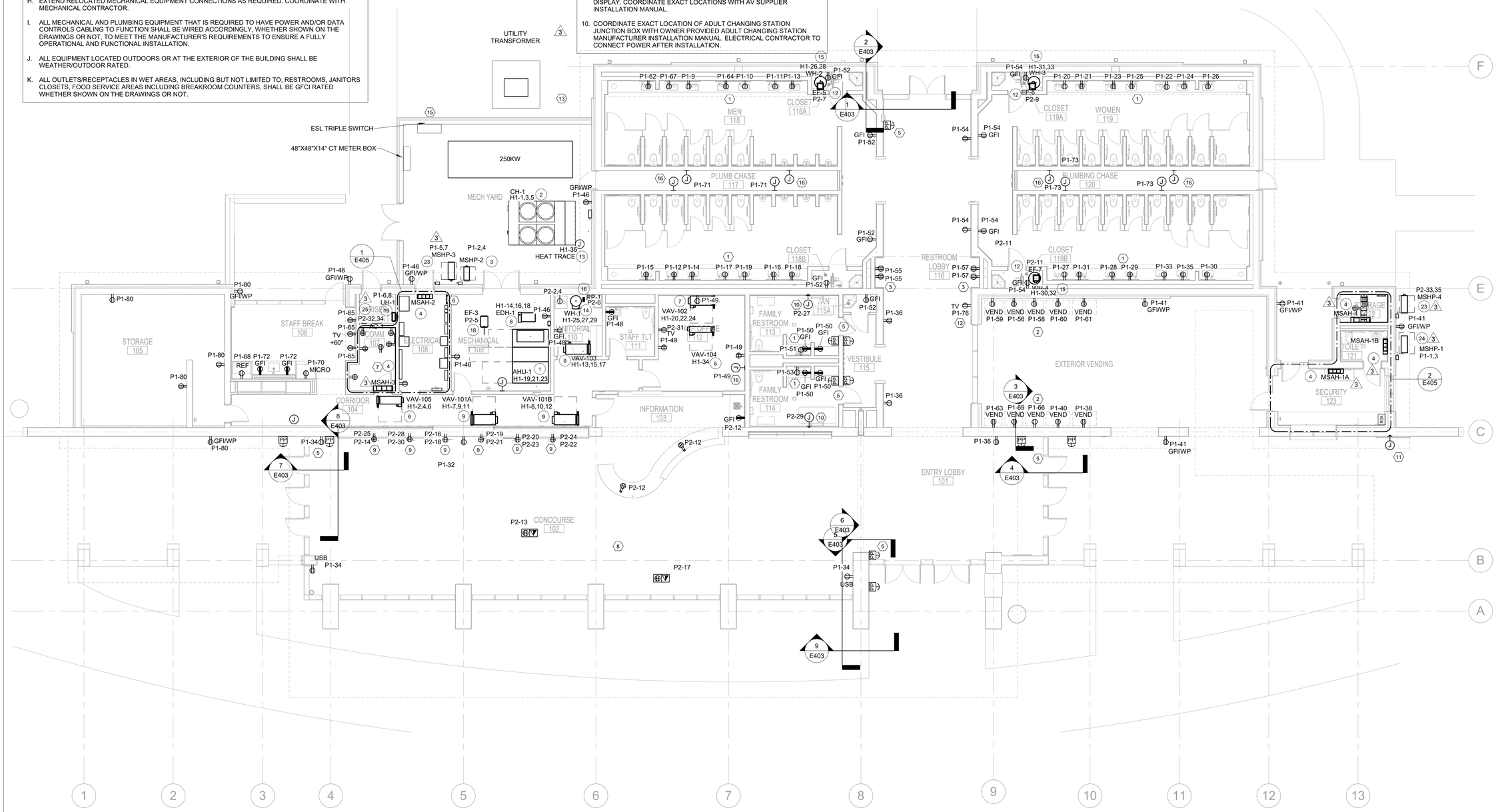

1 E200 E402 FLOOR PLAN - GROUND LEVEL - POWER
1/8" = 1'-0"

SCALE: 1/8"=1'-0"

REVISIONS	
DATE	BY
4/17/26	CAB

CHARLES WAYNE BRANNAN REGISTERED PROFESSIONAL ENGINEER 12447 STATE OF MISSISSIPPI 1-30-26

ADDENDUM

DESIGNED BY:	Designer
DETAILED BY:	LVW
CHECKED BY:	CWF
DATE:	January 30, 2026
FMS CON.	109171-301000
PROJECT NO.	18-023a
COUNTY	JACKSON

I-10 JACKSON COUNTY WELCOME CENTER

FLOOR PLAN - POWER

SHEET ID: E200

SHEET NO. 8807

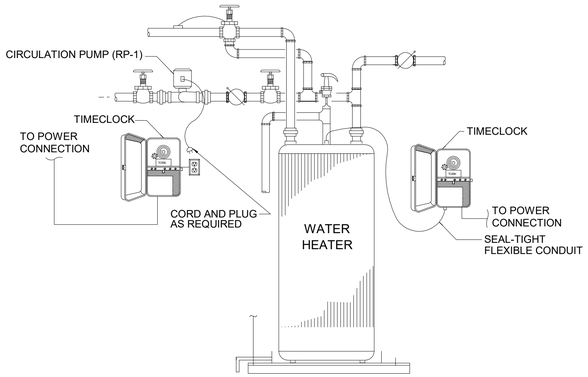

WATER HEATER DETAIL WITH RECIRC. PUMP AND TIMECLOCK

No Scale

01

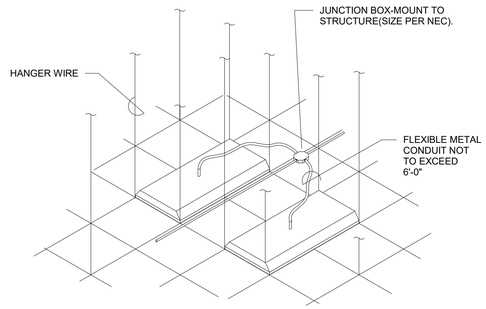

NOTE:

RECESSED FIXTURES INSTALLED IN EXPOSED OR CONCEALED TEE BAR CEILINGS MAY USE CEILING GRID TO SUPPORT FIXTURES. FIXTURES SHALL BE SECURELY FASTENED TO CEILING FRAMEWORK PER NEC ARTICLE 410.

TYPICAL 2'x4' AND 2'x2' LIGHT FIXTURE HANGING DETAIL

No Scale

02

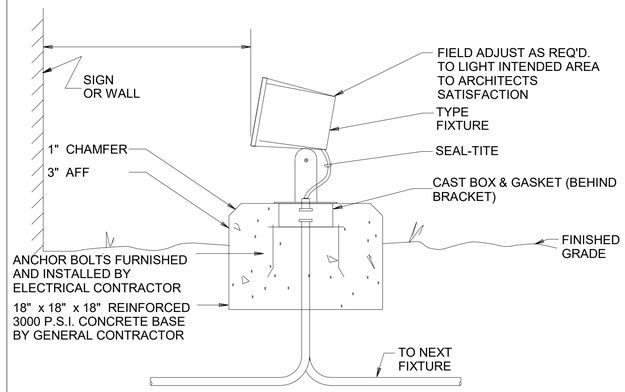

TYPICAL GND. MTD. FLOOD FIXTURE MOUNTING DETAIL

No Scale

03

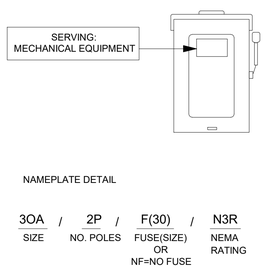

EQUIPMENT DISCONNECT SIZE AND IDENTIFICATION DETAIL

No Scale

04

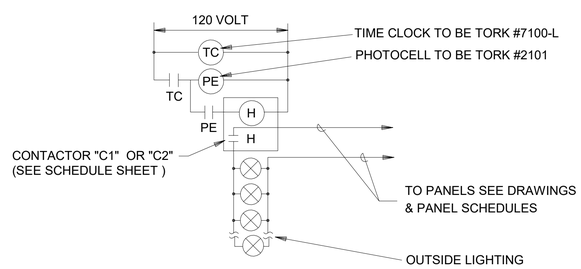

OUTSIDE LIGHTING CONTROL

No Scale

05

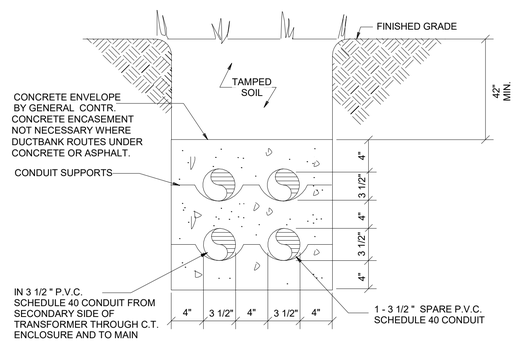

FOUR CONDUIT UNDERGROUND

No Scale

6

3

REVISIONS		
	DATE	BY
3	4/17/26	CAB

CHARLES WAYNE WHITAKER
REGISTERED PROFESSIONAL
12447
1-30-26
ENGINEER
STATE OF MISSISSIPPI

ADDENDUM

DESIGNED BY: Designer
DETAILED BY: LVW
CHECKED BY: CWF
DATE: January 30, 2026

109171-301000
18-023a
JACKSON

FMS CON.
PROJECT NO.
COUNTY

I-10 JACKSON COUNTY WELCOME CENTER

ELECTRICAL DETAILS

SHEET ID: E400

SHEET NO. 8810

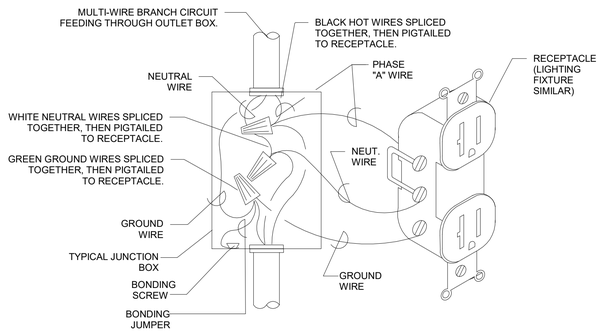

TYPICAL BRANCH CIRCUIT WIRING

No Scale

07

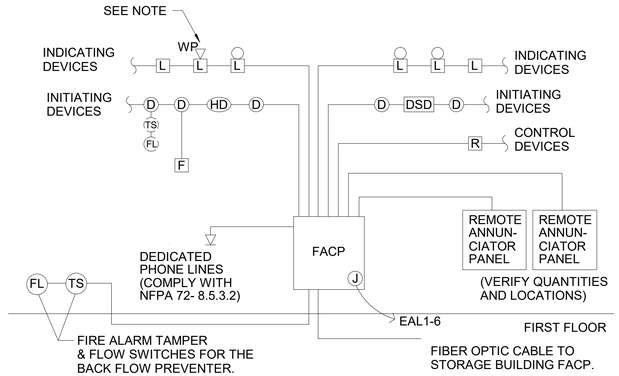

NOTES:

1. PROVIDE BUILDING MAP AT THE FACP LOCATIONS AND ANNUNCIATOR THAT INDICATES ZONES AND DEVICES.
2. PROVIDE WEATHERPROOF DEVICES WHERE SHOWN OR AS REQUIRED BASED ON THE LOCATION OF THE DEVICE.
3. RECORD AND SHOP DRAWINGS SHALL INDICATE EXACT ROUTING AND LOCATIONS OF ALL DEVICES, CONDUITS (TYPES AND SIZES), CONDUCTORS (TYPES AND SIZES) AND ALL PERTINENT INSTALLATION INFORMATION.
4. USE FINAL ACTUAL ROOMS NAMES AND NUMBERS BASED IN THE INSTALLATION OF SIGNAGEAND NOT THE ARCHITECTURAL ROOM NAMES WHEN PROGRAMMING THE FINAL SYSTEM.

FIRE ALARM RISER DIAGRAM
(TYPICAL INSTALLATION REPRESENTED)

FIRE ALARM RISER DIAGRAM

No Scale

08

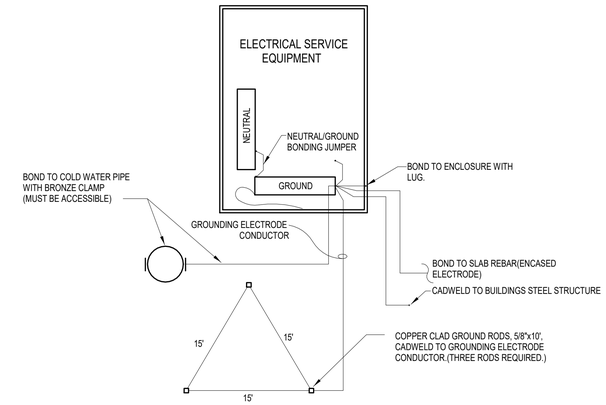

NOTES:

1. ALL BONDING AND GROUNDING CONDUCTORS MUST BE SIZED PER NEC TABLE 250-66.
2. ALL NEUTRALS TERMINATE ON NEUTRAL BUS. ALL GROUND CONDUCTORS TERMINATE ON GROUND BUS. ONE LUG PER CONDUIT.
3. DO NOT BOND OR CONNNECT GROUND /NEUTRAL TOGETHER AT ANY OTHER POINT IN ELECTRICAL SYSTEM EXCEPT AT DRY TYPE TRANSFORMERS (SEE SPECIFICATIONS).

EQUIPMENT GROUNDING/BONDING DETAIL

No Scale

09

REVISIONS	
DATE	BY
4/17/26	CAB

3

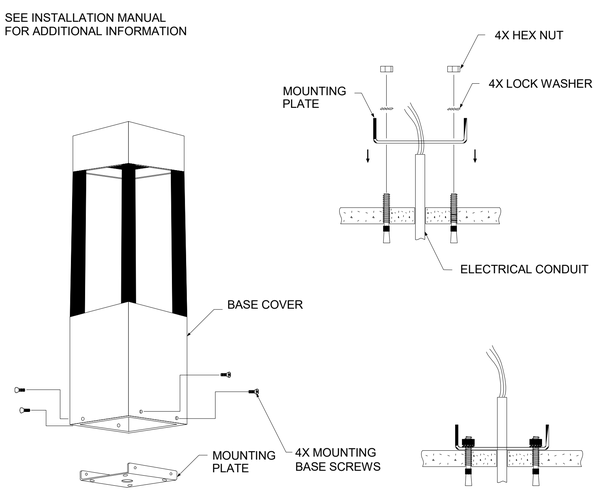

SIDEWALK BOLLARD DETAIL

No Scale

10

3

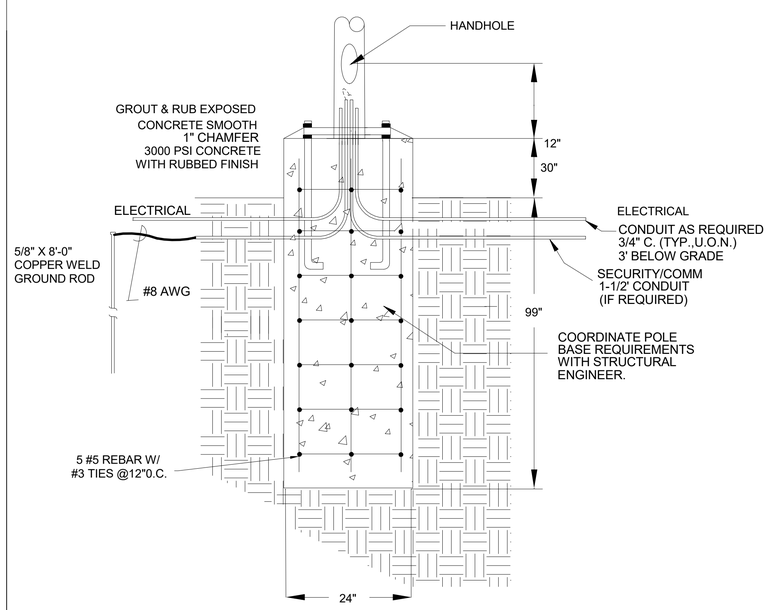

POLE BASE DETAIL WITH COMMUNICATIONS

No Scale

11

3

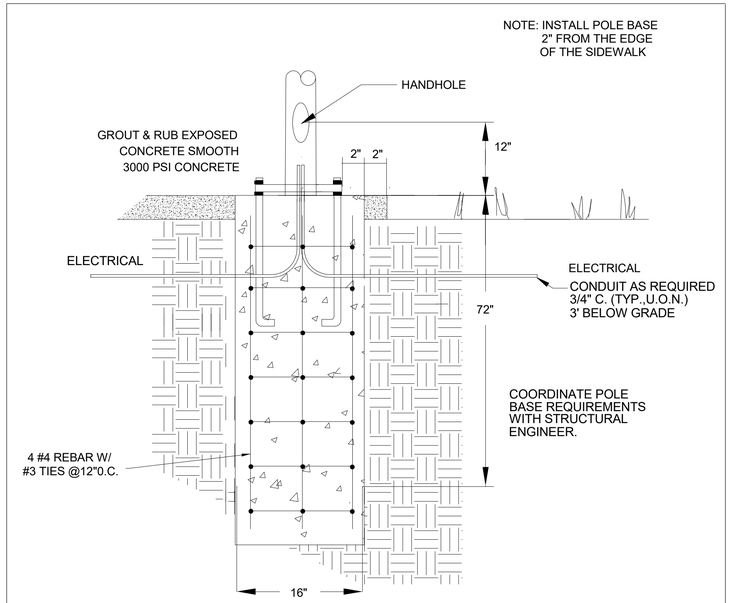

SIDEWALK POLE BASE DETAIL

No Scale

12

3

ADDENDUM

DESIGNED BY: Designer
DETAILED BY: LVW
CHECKED BY: CWF
DATE: January 30, 2026

FMS CON. 109171-301000
PROJECT NO. 18-023a
COUNTY JACKSON

I-10 JACKSON COUNTY WELCOME CENTER

ELECTRICAL DETAILS

SHEET ID: E401

SHEET NO. 8811

KEYED NOTES:

1. INSTALL EL-451 TRANSFORMER FOR OPERATION OF SLOAN AUTOMATIC FLUSH VALVES. ONE TRANSFORMER TO OPERATE (5) FLUSH VALVES.
2. INSTALL DEDICATED QUAD RECEPTACLE TO LADDER RACK ABOVE COMMUNICATIONS RACK.

REVISIONS	
DATE	BY
4/17/26	CAB

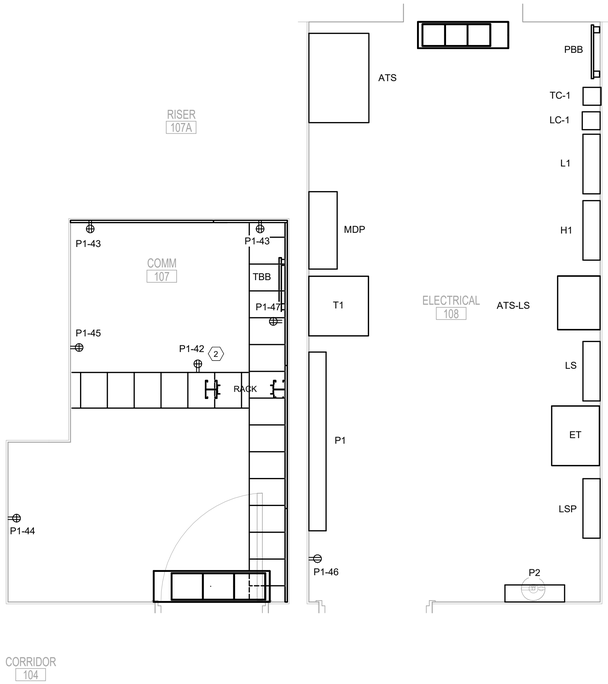

1 E405 E200 FLOOR PLAN - ELECTRICAL/COMMUNICATIONS ROOMS
1/2" = 1'-0"

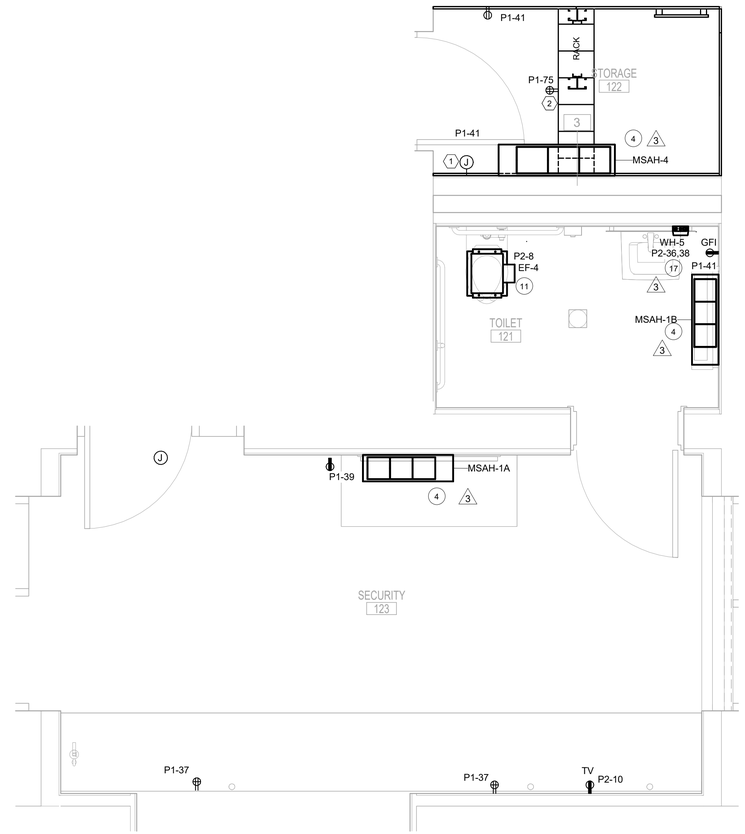

2 E405 E200 FLOOR PLAN - GROUND LEVEL - POWER - Callout 1
1/2" = 1'-0"

CHARLES WAYNE FERNANDEZ
REGISTERED PROFESSIONAL
12447
1-30-26
ENGINEER
STATE OF MISSISSIPPI

ADDENDUM

DESIGNED BY:	Designer
DETAILED BY:	LVW
CHECKED BY:	CWF
DATE:	January 30, 2026
FMS CON.	109171-301000
PROJECT NO.	18-023a
COUNTY	JACKSON

I-10 JACKSON COUNTY WELCOME CENTER

ELECTRICAL - ENLARGED VIEWS

SHEET ID: E405

SHEET NO. 8815

Lighting Fixture Schedule

Type	Manufacturer	Model	Description	Apparent Load
01	LUMIERE	BABA-1003-A1-RCS-RW-LED3090-F-BK-L2-UNV-RSM	LED SPOTLIGHT	14
1A	LUMOUTDOOR	BABA-PRV-XL-PA3B-740-U-T3-SA-BZ	SINGLE HEAD AREA AND ROADWAY LUMINAIRE WITH 30 FOOT POLE	222
1R	METALUX	BABAF-24EN-LD2-34-UNV-L835-CD1-U	2X4 TROFFER LED	29
1S	LUMINII	K45MW-60-72VHO-40K-F-CB-SA-LWE	SURFACE MOUNT LINEAR	20
1T	DIODELED	DI-24-VL2-35	24V TAPE LIGHT SYSTEM	45
1W	CORELITE	BAA-SQ2W-F-125U-100D-L830-1D-UNV-STD-W-WM-38	WALL MOUNTED DIRECT INDIRECT 38FT TOTAL LENGTH	775
1X	ATLITE	BAA-SCM-S16GMBK	EXIT SIGN	3
02	BROWNLEE	1125-BL-H16-35K-BAC	LED SCONCE	16
2A	LUMOUTDOOR	BABA-PRV-XL-PA3B-740-U-T3-SA-BZ	DOUBLE HEAD AREA AND ROADWAY LUMINAIRE WITH 30 FOOT POLE	444
2P	PAVO	SIP12126-L23W-120-277V-3500K-DF_80	PENDANT (2' LENGTH)	23
2W	ALVA	SADIE-46-BLK-3500	SADIE SCONCE	21
2X	ATLITE	BAA-SCM-S16GMBK	DOUBLE-FACED EXIT LIGHT	3
03	BEGA	77700 K35 B70757 BLK	LED FLOODLIGHT	15
3P	PAVO	SIP12126-L19W-120-277V-3500K-DF_80	PENDANT (3' LENGTH)	19
04	TMS	CUSTOME SHAPE	SUSPENDED LOBBY DESK LIGHT	206
4S	METALUX	BABA-4SNX-51SL-SLW-UNV-L840-CD1-U	LENSED STRIP LIGHT	35
06	SPECTRUM	SGE6SQFX-30L-35K-DX-BH27-CA0366FX-PT-MF	6" SQUARE WITH MEDIUM DISTRIBUTION	26
08	ALL AMERICAN LINEAR LIGHTING	2SID-12-LU-MD-35-UNV-JB-BLK-BW	2"x12' INDOOR LINEAR FIXTURE	246
08-08	ALL AMERICAN LINEAR LIGHTING	2SID-08-LU-MD-35-UNV-JB-BLK-C90-BW	2"x8' INDOOR LINEAR FIXTURE	122
08E	ALL AMERICAN LINEAR LIGHTING	2SID-12-LU-MD-35-UNV-JB-BLK-BW-EC-1-J	2"X4' INDOOR LINEAR FIXTURE WITH EMERGENCY CIRCUIT	246
8S	METAUX	BABA-8TSNX-200HL-SLW-UNV-L840-CD2-U	STRIP LIGHT	158
09	ALL AMERICAN LINEAR LIGHTING	2C-08-MD-35-UNV-BLK	2" LED SURFACE DIRECT	75
11	ALL AMERICAN LINEAR LIGHTING	2S-08-MD-35-UNV-JB-BLK	INDOOR LINEAR FIXTURE	75
12	ALL AMERICAN LINEAR LIGHTING	2R-04-MD-35-UNV-OF-BLK	RECESSED DIRECT LIGHTING	37
13-4	VODE	707-Z9-SL48-AW-IP-AE-1-0-Z-SO-35-C1-0-AL	WALL COVE LIGHTING	15
13-6	VODE	707-Z9-SL-72-AW-IP-AE-1-0-Z-SO-35-C1-0-AL	WALL COVE LIGHTING	23
13-8	VODE	707-Z9-SL96-AW-IP-AE-1-0-Z-SO-35-C1-0-AL	WALL COVE LIGHTING	30
14	BEGA	24362AK4	WALL WASHER	38
15	BEGA	B24211	RECESSED WALL LUMINAIRE	7
16	BEGA	B24373K35BLK	WALL LUMINAIRE	21
17	LUMUX	PL3014	LIGHT COLUMN	58
18-4-6E	KENDO	KRMW-54INCH-72SO-35K-F-HS-BK-B-3	KENDO M RECESSED WET - STATIC WHITE LINEAR ILLUMINATION SYSTEM	12
18-4-10	KENDO	KRMW-58INCH-72SO-35K-F-HS-BK-B-1	KENDO M RECESSED WET - STATIC WHITE LINEAR ILLUMINATION SYSTEM	13
18-5-4E	KENDO	KRMW-64INCH-72SO-35K-F-HS-BK-B-3	KENDO M RECESSED WET - STATIC WHITE LINEAR ILLUMINATION SYSTEM	15
18-6E	KENDO	KRMW-72INCH-72SO-35K-F-HS-BK-B-3	KENDO M RECESSED WET - STATIC WHITE LINEAR ILLUMINATION SYSTEM	16
18-7-2E	KENDO	KRMW-86INCH-72SO-35K-F-HS-BK-B-3	KENDO M RECESSED WET - STATIC WHITE LINEAR ILLUMINATION SYSTEM	20
18-7-4E	KENDO	KRMW-88INCH-72SO-35K-F-HS-BK-B-3	KENDO M RECESSED WET - STATIC WHITE LINEAR ILLUMINATION SYSTEM	17
18-7-6E	KENDO	KRMW-90INCH-72SO-35K-F-HS-BK-B-3	KENDO M RECESSED WET - STATIC WHITE LINEAR ILLUMINATION SYSTEM	20
18-7-9E	KENDO	KRMW-93INCH-72SO-35K-F-HS-BK-B-3	KENDO M RECESSED WET - STATIC WHITE LINEAR ILLUMINATION SYSTEM	20
18-7S	KENDO	KRMW-84INCH-72SO-35K-F-HS-BK-B-1	KENDO M RECESSED WET - STATIC WHITE LINEAR ILLUMINATION SYSTEM	19
18-8-1S	KENDO	KRMW-97INCH-72SO-35K-F-HS-BK-B-1	KENDO M RECESSED WET - STATIC WHITE LINEAR ILLUMINATION SYSTEM	22
18-8-6	KENDO	KRMW-102INCH-72SO-35K-F-HS-BK-B-1	KENDO M RECESSED WET - STATIC WHITE LINEAR ILLUMINATION SYSTEM	23
18-8J	KENDO	KRMW-96INCH-72SO-35K-F-HS-BK-B-4	KENDO M RECESSED WET - STATIC WHITE LINEAR ILLUMINATION SYSTEM	22
18-8S	KENDO	KRMW-96INCH-72SO-35K-F-HS-BK-B-2	KENDO M RECESSED WET - STATIC WHITE LINEAR ILLUMINATION SYSTEM	22
18-9-2E	KENDO	KRMW-110INCH-72SO-35K-F-HS-B-K-B-1	KENDO M RECESSED WET - STATIC WHITE LINEAR ILLUMINATION SYSTEM	22
18-11-8	KENDO	KRMW-140INCH-72SO-35K-F-HS-B-K-B-1	KENDO M RECESSED WET - STATIC WHITE LINEAR ILLUMINATION SYSTEM	24
18-12J	KENDO	KRMW-144INCH-72SO-35K-F-HS-BK-B-4	KENDO M RECESSED WET - STATIC WHITE LINEAR ILLUMINATION SYSTEM	31
18-12S	KENDO	KRMW-144INCH-72SO-35K-F-HS-BK-B-2	KENDO M RECESSED WET - STATIC WHITE LINEAR ILLUMINATION SYSTEM	31
19-2S	KENDO	KM-24INCH-72SO-35K-F-A-BK	KENDO M SURFACE WET - STATIC WHITE LINEAR ILUMINATION SYSTEM	5
19-4J	KENDO	KM-48INCH-72SO-35K-F-A-BK	KENDO M SURFACE WET - STATIC WHITE LINEAR ILUMINATION SYSTEM	11
19-7E	KENDO	KM-84INCH-72SO-35K-F-A-BK	KENDO M SURFACE WET - STATIC WHITE LINEAR ILUMINATION SYSTEM	16
19-8E	KENDO	KM-96INCH-72SO-35K-F-A-BK	KENDO M SURFACE WET - STATIC WHITE LINEAR ILUMINATION SYSTEM	22
19-12E	KENDO	KM-144INCH-72SO-35K-F-A-BK	KENDO M SURFACE WET - STATIC WHITE LINEAR ILUMINATION SYSTEM	31
19-12J	KENDO	KM-144INCH-72SO-35K-F-A-BK	KENDO M SURFACE WET - STATIC WHITE LINEAR ILUMINATION SYSTEM	31
19-12S	KENDO	KM-144INCH-72SO-35K-F-A-BK	KENDO M SURFACE WET - STATIC WHITE LINEAR ILUMINATION SYSTEM	31
20	LUMINII	RUNW-72INCH-60X2VHO-35K-F-6-BK	RUNDA WALL MOUNTED LIGHT	56
24B	NLS LIGHTING	SSF-3-8R-UNV-SL-16L-35-40K-UNV	BOLLARD, DARK BRONZE - SEASIDE MAIRINE FINISH	17
25	LUMUX	BL340	BOLLARD	27

JACKSON COUNTY WELCOME CENTER - POWER CONNECTION SCHEDULE

MARK	EQUIPMENT	VOLTS	PHASE	LOAD KW	LOAD HP	FLA	BRANCH CIRCUIT	DISC. SW/FUSE	REMARKS
1	AHU-1	480	3		11	12.5	3#10,1#10G,3/4"C	30A/3P/F25	1,2,4,7
2	CH-1	480	3			93.7	3#1,1#6G,1-1/4"C	200A/3P/F125	1,2,3,7
3	MSHP-2	208	1			11.7	2#10,1#10G,3/4"C	30A/3P/F15/3R	1,2,3,7,13
4	MSAH-1A,1B,2, 3, 4	208	1			1.0	3#12,1#12G,3/4"C	BY DIVISION 23	1,4,7,13
5	VAV 104	277	1	3.5		12.6	2#10,1#10G,3/4"C	BY DIVISION 23	1,3,7,12
6	VAV 105	480	3	7		8.4	3#10,1#10G,3/4"C	BY DIVISION 23	1,3,7,12
7	VAV 102	480	3	8		9.6	3#10,1#10G,3/4"C	BY DIVISION 23	1,3,7,12
8	EDH-1	480	3	33		40.0	3#6,1#10G,3/4"C	60A/3P/F50	1,2,3,7
9	VAV 101A & 101B, 103	480	3	11		13.2	3#10,1#10G,3/4"C	BY DIVISION 23	1,3,7,12
10	EF-1, 2	120	1		1/ 4	2.85	2#12,1#12G,3/4"C	BY DIVISION 23	1,3,7,12
11	EF-4	120	1			0.17	2#12,1#12G,3/4"C	BY DIVISION 23	1,4,7,12
12	EF-5, 6, & 7	120	1			0.29	2#12,1#12G,3/4"C	BY DIVISION 23	1,4,7,12
13	HT-M1	277	1			0.21	2#12,1#12G,3/4"C	BY DIVISION 23	1,4,7
14	WH-1	480	3	24		28.9	3#8,1#10G,3/4"C	60A/2P/F35/3R	1,3,7
15	WH-2, 3 & 4	480	1	12		25.0	2#8,1#10G,3/4"C	30A/2P/F30/3R	1,3,7
16	RP-1	120	1			0.34	2#12,1#12G,3/4"C	BY DIVISION 23	1,3,7
17	WH-5	208	1	5.4		19.5	2#10,1#10G,3/4"C	30A/2P/F30/3R	1,3,7
18	EF-3	120	1			3.60	2#12,1#12G,3/4"C	BY DIVISION 23	1,4,7
19	UH-1	208	1			9.60	2#12,1#12G,3/4"C	BY DIVISION 23	1,4,7
20	AHU-1 CONTROLS	120	1			2.61	2#12,1#12G,3/4"C	BY DIVISION 23	1,3,7
21	UH-2	208	3	15		42.90	3#6,1#10G,3/4"C	60A/3P/F50	1,3,7
22	EF-8	120	1		1/ 4	5.80	2#12,1#12G,3/4"C	BY DIVISION 23	1,3,7
23	MSHP-3 & 4	208	1			13.1	3#10,1#10G,3/4"C	30A/3P/F20/3R	1,2,3,7,13
24	MSHP- 1	208	1			14.3	2#10,1#10G,3/4"C	30A/3P/F20/3R	1,2,3,7,13
25	AC-1	208	1			8.8	2#10,1#10G,3/4"C	30A/3P/F20/3R	1,2,4,7

REMARKS:
1. CIRCUIT TO INCLUDE ONE (1) GREEN GROUNDING CONDUCTOR SIZED PER BRANCH CIRCUIT SIZE UNLESS SHOWN TO BE SIZED DIFFERENTLY. ALL CONDUCTORS TYPE THW.
2. DUAL ELEMENT TYPE FUSE AND SWITCH OF PROPER VOLTAGE. IF FUSE SIZE NOT SHOWN, UNIT TO BE UNFUSED.
3. FINAL CONNECTION USING LIQUID TIGHT FLEXIBLE CONDUIT.
4. FINAL CONNECTION USING FLEXIBLE CONDUIT.
5. MOUNT ABOVE CEILING.
6. WALL MOUNTED.
7. VERIFY ALL ELECTRICAL REQUIREMENTS WITH MANUFACTURER'S SHOP DRAWINGS
8. DISCONNECT SWITCH INTEGRAL WITH UNIT.
9. EACH FAN TO BE PROTECTED SEPARATELY.
10. USE RECEPTACLE IN ACCORDANCE WITH NEC TO INSTALL THIS DEVICE.
11. MOUNT DISCONNECT ON SIDE OF UNIT.
12. REFER TO WIRING DEVICES SECTION OF DIVISION 23 SPECS FOR SWITCHING REQUIREMENTS
13. FEED INDOOR UNITS FROM OUTDOOR UNITS.
14. PROVIDE AS PART OF ADDITIVE ALTERNATE-1

Key Name

BUILD AMERICA, BUY AMERICA ACT (BABA)

A. THIS PROJECT IS SUBJECT TO THE BUILD AMERICA, BUY AMERICA ACT (BABA), 41 U.S.C. §§ 8301–8305.
B. REFER TO SPECIFICATION SECTION 016000 AND ELECTRICAL SPECIFICATIONS FOR REQUIREMENTS.

REVISIONS	
DATE	BY
4/17/26	CAB

CHARLES WAYNE PRINCIPAL
LICENSED PROFESSIONAL
12447
1-30-26
ENGINEER
STATE OF MISSISSIPPI

ADDENDUM

DESIGNED BY: Designer
DETAILED BY: LVW
CHECKED BY: CWF
DATE: January 30, 2026

FMS CON. 109171-301000
PROJECT NO. 18-023a
COUNTY JACKSON

I-10 JACKSON COUNTY WELCOME CENTER

ELECTRICAL SCHEDULES

SHEET ID: E501
SHEET NO. 8819

Branch Panel: P1

Location: ELECTRICAL 108
Supply From: T1
Mounting: Surface
Enclosure: Type 1

Volts: 120/208 Wye
Phases: 3
Wires: 4

A.I.C. Rating: 10,000
Mains Type: MCB
Mains Rating: 250
MCB Rating: 250

Notes:
FEED THRU LUGS TO SERVE PANEL P2

CKT	Circuit Description	Demand Code	TRIP	P	A		B		C		P	TRIP	Demand Code	Circuit Description	CKT
P1-1	MSHP-1	HVAC	20	2	1487	1144					2	20	HVAC	MSHP-2	P1-2
P1-3	--	--	--	--			1487	1144			--	--	--	--	P1-4
P1-5	MSHP-3	HVAC	20	2					1359	998	2	20	Heating	UH-1	P1-6
P1-7	--	--	--	--	1359	998					--	--	--	--	P1-8
P1-9	LAV REC - MEN - GFCI	Recept...	20	1			1200	1200			1	20	Recept...	LAV REC - MEN - GFCI	P1-10
P1-11	LAV REC - MEN - GFCI	Recept...	20	1					1200	1200	1	20	Recept...	LAV REC - MEN - GFCI	P1-12
P1-13	LAV REC - MEN - GFCI	Recept...	20	1	1200	1200					1	20	Recept...	LAV REC - MEN - GFCI	P1-14
P1-15	LAV REC - MEN - GFCI	Recept...	20	1			1200	1200			1	20	Recept...	LAV REC - MEN - GFCI	P1-16
P1-17	LAV REC - MEN - GFCI	Recept...	20	1					1200	1200	1	20	Recept...	LAV REC - MEN - GFCI	P1-18
P1-19	LAV REC - MEN - GFCI	Recept...	20	1	1200	1200					1	20	Recept...	LAV REC - WOMEN - GFCI	P1-20
P1-21	LAV REC - WOMEN - GFCI	Recept...	20	1			1200	1200			1	20	Recept...	LAV REC - WOMEN - GFCI	P1-22
P1-23	LAV REC - WOMEN - GFCI	Recept...	20	1					1200	1200	1	20	Recept...	LAV REC - WOMEN - GFCI	P1-24
P1-25	LAV REC - WOMEN - GFCI	Recept...	20	1	1200	1200					1	20	Recept...	LAV REC - WOMEN - GFCI	P1-26
P1-27	LAV REC - WOMEN - GFCI	Recept...	20	1			1200	1200			1	20	Recept...	LAV REC - WOMEN - GFCI	P1-28
P1-29	LAV REC - WOMEN - GFCI	Recept...	20	1					1200	1200	1	20	Recept...	LAV REC - WOMEN - GFCI	P1-30
P1-31	LAV REC - WOMEN - GFCI	Recept...	20	1	1200	180					1	20	Recept...	REC - CONCOURSE	P1-32
P1-33	LAV REC - WOMEN - GFCI	Recept...	20	1			1200	540			1	20	Recept...	REC - CONCOURSE	P1-34
P1-35	LAV REC - WOMEN - GFCI	Recept...	20	1					1200	540	1	20	Recept...	REC - ENTRY LOBBY, RESTROOM LOBBY	P1-36
P1-37	REC - SECURITY	Recept...	20	1	720	180					1	20	Recept...	REC - VENDING	P1-38
P1-39	REC - SECURITY	Recept...	20	1			180	180			1	20	Recept...	REC - VENDING	P1-40
P1-41	REC - TOILET, STORAGE	Recept...	20	1					1105	360	1	20	Recept...	REC - COMM	P1-42
P1-43	REC - COMM	Recept...	20	1	720	360					1	20	Recept...	REC - COMM	P1-44
P1-45	REC - COMM	Recept...	20	1			360	1080			1	20	Recept...	REC - ELECTRICAL, MECHANICAL	P1-46
P1-47	REC - COMM	Recept...	20	1					360	360	1	20	Recept...	REC - STAFF TLT, JANITORIAL	P1-48
P1-49	REC - STAFF OFFICE	Recept...	20	1	1130	720					1	20	Recept...	REC - FAMILY RESTROOM	P1-50
P1-51	REC - FAMILY RESTROOM	Recept...	20	1			1200	900			1	20	Recept...	REC - CLOSET, JAN, MEN	P1-52
P1-53	REC - FAMILY RESTROOM	Recept...	20	1					1200	1080	1	20	Recept...	REC - RESTROOM LOBBY, CLOSET, WOMEN	P1-54
P1-55	REC - RESTROOM LOBBY	Equip...	20	1	1000	180					1	20	Recept...	REC - VENDING	P1-56
P1-57	REC - RESTROOM LOBBY	Equip...	20	1			1000	180			1	20	Recept...	REC - VENDING	P1-58
P1-59	REC - VENDING	Equip...	20	1					1200	1200	1	20	Equip...	REC - VENDING	P1-60
P1-61	REC - VENDING	Recept...	20	1	180	1200					1	20	Recept...	LAV REC - MEN - GFCI	P1-62
P1-63	REC - VENDING	Recept...	20	1			180	1200			1	20	Recept...	LAV REC - MEN - GFCI	P1-64
P1-65	REC - STAFF BREAK	Recept...	20	1					610	180	1	20	Recept...	REC - VENDING	P1-66
P1-67	LAV REC - MEN - GFCI	Recept...	20	1	1200	1200					1	20	Equip...	REF - STAFF BREAK	P1-68
P1-69	REC - VENDING	Recept...	20	1			180	1200			1	20	Recept...	MICRO - STAFF BREAK	P1-70
P1-71	FLUSH VALVES	Equip...	20	1					500	360	1	20	Recept...	REC - STAFF BREAK	P1-72
P1-73	FLUSH VALVES	Equip...	20	1	500	342					1	20	Motor	EF-1	P1-74
P1-75	DEDICATED QUAD SECURITY RACK	Recept...	20	1			360	500			1	20	Equip...	RR LOBBY - TV RECEPS	P1-76
P1-77															P1-78
P1-79	TVSS	--	60	1	0	900					1	20	Recept...	REC - STORAGE	P1-80
P1-81	-	--	60	1			0								P1-82
P1-83	-	--	60	1					0						P1-84
					Total Load:		30165		30594						
					Total Amps:		251		256						

Legend:

Load Classification	Connected Load	Demand Factor	Estimated Demand	Panel Totals	
HVAC	10700	100.00%	10700		
Motor	3042	100.00%	3042	**Total Conn. Load:**	92200
Heating	6051	100.00%	6051	**Total Est. Demand:**	68600
Equipment	19007	90.00%	17106	**Total Conn. Current:**	256
Receptacle	53400	59.36%	31700	**Total Est. Demand Current:**	190

Notes:

Branch Panel: P2

Location: ELECTRICAL 108
Supply From: P1
Mounting: Surface
Enclosure: Type 1

Volts: 120/208 Wye
Phases: 3
Wires: 4

A.I.C. Rating: 10,000
Mains Type: MLO
Mains Rating: 250

Notes:

CKT	Circuit Description	Demand Code	TRIP	P	A		B		C		P	TRIP	Demand Code	Circuit Description	CKT
P2-1	REC - ROOF	Recept...	20	1	360	1664					2	50	Equip...	W/D	P2-2
P2-3	EF-2	Motor	20	1			342	1664			--	--	--	--	P2-4
P2-5	EF-3	Motor	20	1					432	34	1	20	Equip...	RECIRCULATION PUMP	P2-6
P2-7	EF-5	Motor	20	1	35	20					1	20	Motor	EF-4	P2-8
P2-9	EF-6	Motor	20	1			20	500			1	20	Equip...	REC - SECURITY MONITOR	P2-10
P2-11	EF-4	Motor	20	1					20	900	1	20	Recept...	REC - INFORMATION	P2-12
P2-13	REC - CONCOURSE - FLOOR BOX	Recept...	20	1	360	500					1	20	Equip...	REC - DISPLAY - AV	P2-14
P2-15	SIGN GFCI	Recept...	20	1			180	500			1	20	Equip...	REC - DISPLAY - AV	P2-16
P2-17	REC - CONCOURSE - FLOOR BOX	Recept...	20	1					360	500	1	20	Equip...	REC - DISPLAY - AV	P2-18
P2-19	REC - DISPLAY - AV	Equip...	20	1	500	500					1	20	Equip...	REC - DISPLAY - AV	P2-20
P2-21	REC - DISPLAY - AV	Equip...	20	1			500	500			1	20	Equip...	REC - DISPLAY - AV	P2-22
P2-23	REC - DISPLAY - AV	Equip...	20	1					500	500	1	20	Equip...	REC - DISPLAY - AV	P2-24
P2-25	REC - DISPLAY - AV	Equip...	20	1	500	500					1	20	Equip...	AHU-1 CONTROLS	P2-26
P2-27	ADULT CHANGING STATION	Equip...	20	1			360	500			1	20	Equip...	REC - DISPLAY - AV	P2-28
P2-29	ADULT CHANGING STATION	Equip...	20	1					360	500	1	20	Equip...	REC - DISPLAY - AV	P2-30
P2-31	TV REC STAFF OFFICE 112	Equip...	20	1	500	915					2	20	Motor	AC-1	P2-32
P2-33	MSHP-4	HVAC	20	2			1359	915			--	--	--	--	P2-34
P2-35	--	--	--	--					1359	2027	2	20	Heating	WH-5	P2-36
P2-37						2027					--	--	--	--	P2-38
P2-39															P2-40
P2-41															P2-42
P2-43															P2-44
P2-45															P2-46
P2-47															P2-48
P2-49															P2-50
P2-51															P2-52
P2-53															P2-54
P2-55															P2-56
P2-57															P2-58
P2-59															P2-60
				Total Load:	8382		7341		7493						
				Total Amps:	70		61		63						

Legend:

Load Classification	Connected Load	Demand Factor	Estimated Demand	Panel Totals	
HVAC	2719	100.00%	2719		
Motor	2700	100.00%	2700	**Total Conn. Load:**	23216
Heating	4055	100.00%	4055	**Total Est. Demand:**	22058
Equipment	11582	90.00%	10424	**Total Conn. Current:**	64
Receptacle	2160	100.00%	2160	**Total Est. Demand Current:**	61

Notes:

REVISIONS	
DATE	BY
4/17/26	CAB

CHARLES WAYNE CAMPBELL
LICENSED PROFESSIONAL
12447
1-30-26
ENGINEER
STATE OF MISSISSIPPI

ADDENDUM

DESIGNED BY: Designer
DETAILED BY: CAB
CHECKED BY: CWF
DATE: January 30, 2026

FMS CON. 109171-301000
PROJECT NO. 18-023a
COUNTY JACKSON

I-10 JACKSON COUNTY WELCOME CENTER

PANEL SCHEDULES

SHEET ID: E504

SHEET NO. 8822