MDOT Use Only
Checked _____
Loaded _____
Keyed _____

01 -

SM No. CER0240000211

PROPOSAL AND CONTRACT DOCUMENTS

FOR THE CONSTRUCTION OF

01
Storm Damage Repairs on SR 589 and US 49, known as Federal Aid Project Nos. ER-0240-00(021) / 110299301, ER-0008-02(137) / 110300302, ER-0008-02(139) / 110377301 & ER-0008-02(138) / 110378301 in Covington County.

Project Completion: 26 Working Days

(STATE DELEGATED)

NOTICE

BIDDERS MUST COMPLETE AN ONLINE REQUEST FOR PERMISSION TO BID THIS PROJECT.

Electronic addendum updates will be posted on www.gomdot.com

SECTION 900

OF THE CURRENT 2017 STANDARD SPECIFICATIONS FOR ROAD AND BRIDGE CONSTRUCTION

JACKSON, MISSISSIPPI

MISSISSIPPI DEPARTMENT OF TRANSPORTATION
TABLE OF CONTENTS

PROJECT: ER-0240-00(021)/110299301 - Covington
ER-0008-02(137)/110300302 - Covington
ER-0008-02(139)/110377301 - Covington
ER-0008-02(138)/110378301 - Covington

Section 901 - Advertisement

Section 904 - Notice to Bidders

#1	Governing Specification, w/ Supplement
#2	Status of ROW, w/ Attachments
#296	Reduced Speed Limit Signs
#445	Mississippi Agent or Qualified Nonresident Agent
#516	Errata and Modifications to the 2017 Standard Specifications
#1225	Early Notice to Proceed
#1226	Material Storage Under Bridges
#1241	Fuel and Material Adjustments
#1963	Guardrail Pads
#2206	MASH Compliant Devices
#2273	Mississippi Special Fuel Tax Law
#2954	Reflective Sheeting for Signs
#4113	Unique Entity ID Requirement For Federal Funded Projects
#4702	App for Traffic Control Report
#5551	Federal Bridge Formula
#8192	Obilgation Date
#8532	Contract Time
#8533	Scope of Work
#8534	Project Number Change

906	Required Federal Contract Provisions -- FHWA 1273, w/Supplements

Section 907 - Special Provisions

907-101-1	Definitions and Terms
907-102-2	Bidding Requirements and Conditions
907-104-2	Minor Alterations to the Contract
907-105-3	Control of Work
907-106-5	Control of Materials
907-108-4	Subletting of Contract
907-108-6	Default and Termination of Contract
907-109-5	Measurement and Payment
907-618-4	Additional Signing Requirements, w/Supplement
907-618-12	Traffic Control Management
907-700-3	Materials and Tests w/Attachment
907-701-4	Hydraulic Cement, w/ Supplement
907-702-4	Bituminous Materials
907-703-2	Gradation
907-705-1	Stone Riprap
907-707-3	Joint Materials

PROJECT: **ER-0240-00(021)/110299301 - Covington**
ER-0008-02(137)/110300302 - Covington
ER-0008-02(139)/110377301 - Covington
ER-0008-02(138)/110378301 - Covington

907-711-2	Plain Steel Wire
907-712-1	Fence and Guardrail
907-714-4	Miscellaneous Materials
907-718-1	Timber and Dimension Lumber
907-720-4	Pavement Marking Materials
907-721-4	Materials for Signing

Section 905 - Proposal, Proposal Bid Items, Combination Bid Proposal
Certification of Performance - Prior Federal-Aid Contracts
Certification Regarding Non-Collusion, Debarment and Suspension
SAM.GOV Registration and Unique Entity ID
Section 902 - Contract Form
Section 903 - Contract Bond Forms

Progress Schedule

(REVISIONS TO THE ABOVE WILL BE INDICATED ON THE SECOND SHEET OF SECTION 905 AS ADDENDA)

11/16/2026 02:42 PM

MISSISSIPPI DEPARTMENT OF TRANSPORTATION

SECTION 901 - ADVERTISEMENT

Electronic bids will be received by the Mississippi Transportation Commission at 10:00 o'clock A.M., Tuesday, December 8, 2026 from Express Bid Service and shortly thereafter publicly read in the Construction Division Conference Room For:

Storm Damage Repairs on SR 589 and US 49, known as Federal Aid Project Nos. ER-0240-00(021) / 110229301, ER-0008-02(137) / 110300302, ER-0008-02(139) / 110377301 & ER-0008-02(138) / 110378301 in Covington County.

The attention of bidders is directed to the Contract Provisions governing selection and employment of labor. Minimum wage rates have been predetermined by the Secretary of Labor and are subject to Public Law 87-581, Work Hours Act of 1962, as set forth in the Contract Provisions.

The Mississippi Department of Transportation hereby notifies all bidders that it will affirmatively insure that in any contract entered into pursuant to this advertisement, disadvantaged business enterprises will be afforded full opportunity to submit bids in response to this invitation and will not be discriminated against on the grounds of race, color, sex, age, disability, religion or national origin in consideration for an award.

The specifications are on file in the offices of the Mississippi Department of Transportation.

Contractors may request permission to bid online at http://shopmdot.ms.gov at no cost. Upon approval, Contractors shall be eligible to submit a bid using Bid Express at http://bidx.com. Specimen proposals may be viewed and downloaded online at no cost at http://mdot.ms.gov or purchased online at https://shopmdot.ms.gov. Specimen proposals are available at a cost of Ten Dollars ($10.00) per proposal plus a small convenience fee. Cash or checks will not be accepted as payment.

Bid bond, signed or countersigned by a Mississippi Agent or Qualified Nonresident Agent, with Power of Attorney attached, a Cashier's check or Certified Check for five (5%) percent of bid, payable to STATE OF MISSISSIPPI, must accompany each proposal.

The attention of bidders is directed to the provisions of Subsection 102.07 pertaining to irregular proposals and rejection of bids.

BRAD WHITE
EXECUTIVE DIRECTOR

MISSISSIPPI DEPARTMENT OF TRANSPORTATION

SUPPLEMENT TO NOTICE TO BIDDERS NO. 1

DATE: **06/08/2021**

SUBJECT: **Governing Specifications**

Change the web address at the end of the first paragraph to the following.

https://shop.mdot.ms.gov/default.aspx?StoreIndex=1

MISSISSIPPI DEPARTMENT OF TRANSPORTATION

SECTION 904 - NOTICE TO BIDDERS NO. 1 **CODE: (IS)**

DATE: 03/01/2017

SUBJECT: Governing Specifications

The current (2017) Edition of the Standard Specifications for Road and Bridge Construction adopted by the Mississippi Transportation Commission is made a part hereof fully and completely as if it were attached hereto, except where superseded by special provisions, or amended by revisions of the Specifications contained within this proposal. Copies of the specification book may be purchased from the MDOT Construction Division, or online at shopmdot/default.aspx?StoreIndex=1.

A reference in any contract document to controlling requirements in another portion of the contract documents shall be understood to apply equally to any revision or amendment thereof included in the contract.

In the event the plans or proposal contain references to the 2004 Edition of the Standard Specifications for Road and Bridge Construction, it is to be understood that such references shall mean the comparable provisions of the 2017 Edition of the Standard Specifications.

MISSISSIPPI DEPARTMENT OF TRANSPORTATION

SECTION 904 - NOTICE TO BIDDERS NO. 2 **CODE: (IS)**

DATE: 03/01/2017

SUBJECT: Status of Right-of-Way

Although it is desirable to have acquired all rights-of-way and completed all railroad agreements, utility adjustments and work to be performed by others prior to receiving bids, sometimes it is not considered to be in the public interest to wait until each and every such clearance has been obtained. The bidder is hereby advised of possible unacquired rights-of-way, relocates, railroad agreements and utilities adjustments which have not been completed.

The status of right-of-way acquisition, utility adjustments, encroachments, potentially contaminated sites, railroad facilities, improvements, and asbestos contamination are set forth in the following attachments.

In the event right of entry is not available to ALL parcels of right-of-way and/or all work that is to be accomplished by others on the date set forth in the contract for the Notice to Proceed is not complete, the Department will issue a restricted Notice to Proceed.

STATUS OF RIGHT-OF-WAY
ER-0240-00(021) 110299/301000
ER-0008-02(137) 110300/302000
ER-0008-02(139) 110377/301000
ER-0008-02(138) 110378/301000
Covington County

All rights of way and legal rights of entry have been acquired **except:**

None.

MDOT MISSISSIPPI DEPARTMENT OF TRANSPORTATION

Inter-Departmental Memorandum

TO: Mr. Don Drake

Right-of-Way Division (84-01)

DATE: 10/12/2026

FROM: Lance Cutrer SKH for Lance Cutrer

District Seven Preconstruction (17-01)

SUBJECT OR PROJECT NO: 110299/301000
ER-0240-00(021)
110300/301000 202088 LC
ER-0008-02(137)
110377/301000
ER-0008-02(139)
110378/301000
ER-0008-02(138)

COUNTY: Covington

INFORMATION COPY TO:

Preconstruction File

Central File

District Seven (Mr. Cupit & Mr. Whittington)

Right of Way Division (Mr. Harris)

Construction Division (Mr. Zivic)

1. **STATUS OF RIGHT OF WAY:** No ROW required.
2. **RIGHT OF WAY CLEARANCE:** There are no encroachments.
3. **STATUS OF AFFECTED RAILROAD OPERATING FACILITIES:** None affected.
4. **STATUS OF REQUIRED UTILITY RELOCATIONS:** None affected.
5. **STATUS OF CONSTRUCTION AGREEMENT:** None affected.

If any other information is required, please advise.

MISSISSIPPI DEPARTMENT OF TRANSPORTATION

Inter-Departmental Memorandum

TO: Lance Cutrer
D7 Pre-Construction

Date: 10/12/2026

FROM: Will Andrews, P.E.
Mendenhall Project Office

SUBJECT OR PROJECT NO: ER-0240-00(021)/110299
ER-0008-02(137)/110300
ER-0008-02(139)/110377
ER-0008-02(138)/110378

INFORMATION COPY TO: Project File
District File

COUNTY: Covington

I have inspected the captioned project and noted no obvious encroachments that will affect the proposed work on the project.

If any other information is required, please advise.

UTILITY STATUS REPORT

342000

Project Number	110299/301000 and 110300/299668 and 110377/301000 and 110378/301000
County	Covington
Project Description	MS 589 - box culvert, and US 49 Retaining Walls, and US 49 over Big Swamp Creek (Bridge #s 90.1A & 90.1B), and US 49 over Double Branch Creek (Bridge # 89.1B)

Utilities that were Relocated

Utility Name & Contact Info	Relocation Site of Utility	Status of the conflict with Project Construction	Restriction information & other remarks, if applicable (i.e. location, date in effect, etc...)
None			

Utilities to be relocated

Utility Name & Contact Info	Current Utility Location	Status of plans, agreements, or permits	Proposed Relocation Site	Estimated date for Utility relocation completion	Restriction information & other remarks, if applicable (i.e. location, date in effect, etc...)
None					

Utilities to remain

Utility Name & Contact Info	Utility Location to Remain	Status of the conflict with Project Construction	Restriction information & other remarks, if applicable (i.e. location, date in effect, etc...)
None			

ASBESTOS ABATEMENT STATUS REPORT

ER-0240-00(021) 110299-301000
ER-0008-02(137) 110300-302000
ER-0008-02(139) 110377-301000
ER-0008-02(138) 110378-301000

Covington County

November 9, 2026

Reference is made to notices to bidders entitled "Asbestos National Emission Standards for Hazardous Air Pollutants (NESHAP)" and "Removal of Obstructions".

The following pertinent information is furnished concerning asbestos-containing materials (ACMs), if any, found in buildings to be removed by the Contractor.

There is no right-of-way required for this project, and the contractor will not need to remove any buildings.

STATUS OF POTENTIALLY CONTAMINATED SITES REPORT

ER-0240-00(021) 110299-301000
ER-0008-02(137) 110300-302000
ER-0008-02(139) 110377-301000
ER-0008-02(138) 110378-301000

Covington County

November 9, 2026

THERE IS NO RIGHT-OF-WAY REQUIRED FOR THIS PROJECT. NO INITIAL SITE ASSESSMENT WILL BE PERFORMED. IF CONTAMINATION ON THE EXISTING RIGHT-OF-WAY IS DISCOVERED, IT WILL BE HANDLED BY THE DEPARTMENT.

IMPROVEMENTS STATUS REPORT

Improvements to be included in the Notice to Bidders to be removed by the Construction Contractor

FMS Construction Project No: 110299-301000
110300-302000
110377-301000
110378-301000

FMS ROW Project No:

External ROW No: ER-0240-00(021)
ER-0008-02(137)
ER-0008-02(139)
ER-0008-02(138)

Parcel No:
Station No:
Property Owner:
Description/Pictures:

MISSISSIPPI DEPARTMENT OF TRANSPORTATION

SECTION 904 - NOTICE TO BIDDERS NO. 296 **CODE: (SP)**

DATE: 07/25/2017

SUBJECT: Reduced Speed Limit Signs

Bidders are advised that when the plans or contract documents require the speed limit on a project to be reduced, the Contractor shall begin work within 48 hours of installing the reduced speed limit signs. Should the Contractor not start work or have no plans to start work within 48 hours of installing the signs, the reduced speed limit signs shall be covered and existing speed limit signs uncovered.

MISSISSIPPI DEPARTMENT OF TRANSPORTATION

SECTION 904 - NOTICE TO BIDDERS NO. 445 **CODE: (SP)**

DATE: 10/10/2017

SUBJECT: Mississippi Agent or Qualified Nonresident Agent

Bidders are hereby advised of the requirements of Subsections 102.08, 103.05.2, and 107.14.2.1 of the *2017 Standard Specifications for Road and Bridge Construction* as it refers to bonding agents. Proposal guaranties, bonds, and liability insurance policies must be signed by a **Mississippi Agent or Qualified Nonresident Agent.**

MISSISSIPPI DEPARTMENT OF TRANSPORTATION

SECTION 904 - NOTICE TO BIDDERS NO. 516 **CODE: (IS)**

DATE: 11/28/2017

SUBJECT: Errata and Modifications to the 2017 Standard Specifications

Page	Subsection	Change
16	102.06	In the seventh full paragraph, change "Engineer" to "Director."
33	105.05.1	In the sixth sentence, change "Contract Administration Engineer" to "Contract Administration Director."
34	105.05.2.1	In subparagraph 2, change "SWPPP, ECP" to "SWPPP and the ECP"
35	105.05.2.2	In subparagraphs 2, add " and" to the end of the sentence. In subparagraph 3, remove ", and" and add ".".
90	109.04.2	In the last paragraph of subparagraph (a), place a period "." at the end of the sentence.
93	109.04.2	In the last paragraph of subparagraph (g), place a period "." at the end of the sentence. Also, in the first paragraph of subparagraph (h), place a period "." at the end of the sentence.
97	109.07	Under ADJUSTMENT CODE, subparagraph (A1), change "HMA mixture" to "Asphalt mixtures."
98	109.11	In the third sentence, change "Engineer" to "Director."
219	308.04	In the last sentence of the last paragraph, change "Contractor's decision" to "Engineer's decision."
300	405.02.5.9	In the first sentence of the second paragraph, change "Hot Mix Asphalt" to "Asphalt Mixtures."
502	630.01.1	In the first paragraph, change "AASHTO" to "AASHTO's LRFD".
636	646.05	Change "each" to "per each" for the pay item units of payment.
640	656.02.6.2	In item 7), change "down stream" to "downstream".
688	630.03.2	Change the subsection number from "630.03.2" to "680.03.2."

725	702.08.3	In the second sentence of the first paragraph, change "hot-mix" to "asphalt."
954	804.02.13.1.6	In the definition for "M" in the % Reduction formulas, change "paragraph 7.3" to "paragraph 5.3."

MISSISSIPPI DEPARTMENT OF TRANSPORTATION

SECTION 904 - NOTICE TO BIDDERS NO. 1225 **CODE: (SP)**

DATE: 11/13/2018

SUBJECT: Early Notice to Proceed

Bidders are advised that if an early notice to proceed is allowed by the Department and the Contractor experiences problems or delays between the early notice to proceed date and the original notice to proceed date, this shall not be justification for any monetary compensation or an extension of contract time.

MISSISSIPPI DEPARTMENT OF TRANSPORTATION

SECTION 904 - NOTICE TO BIDDERS NO. 1226 **CODE: (IS)**

DATE: 11/16/2018

SUBJECT: Material Storage Under Bridges

Bidders are advised that Subsection 106.08 of the Standard Specifications allows the Contractor to store materials and equipment on portions of the right-of-way. However, the Contractor will not be allowed to store or stockpile materials under bridges without written permission from the Project Engineer. The Contractor shall submit a detailed request of all proposed materials to be stored under bridges to the Engineer a minimum of 14 calendar days prior to anticipated storage. This detail shall include, but not limited to, bridge location, material type, material quantity, and duration of storage. The Project Engineer and any other needed Division will review this information and determine whether to grant approval. The Contractor shall not store any material under any bridge without written approval from the Project Engineer.

MISSISSIPPI DEPARTMENT OF TRANSPORTATION

SECTION 904 - NOTICE TO BIDDERS NO. 1241 **CODE: (IS)**

DATE: 11/27/2018

SUBJECT: Fuel and Material Adjustments

Bidder's attention is brought to the last paragraph of Subsection 109.07 of the Standard Specifications which states that no fuel or material adjustment will be made after the completion of contract time. Any fuels consumed or materials incorporated into the work during the monthly estimate period falling wholly after the expiration of contract time will not be subject a fuel or material adjustment.

MISSISSIPPI DEPARTMENT OF TRANSPORTATION

SECTION 904 - NOTICE TO BIDDERS NO. 1963 **CODE: (SP)**

DATE: 9/23/2019

SUBJECT: Guardrail Pads

Bidders are hereby advised that prior to construction of the guardrail pads, the Contractor shall coordinate with the guardrail Subcontractor to determine the guardrail pad dimensions necessary to meet MASH compliance.

MISSISSIPPI DEPARTMENT OF TRANSPORTATION

SECTION 904 - NOTICE TO BIDDERS NO. 2206 **CODE: (IS)**

DATE: 01/14/2020

SUBJECT: MASH Compliant Devices

Bidders are hereby advised that compliance associated with the requirements of meeting either the National Cooperative Highway Research Program (NCHRP) Report 350 or the Manual for Assessing Safety Hardware (MASH) for installations of certain traffic control devices and permanent safety hardware devices (guardrails, guardrail terminals, permanent portable barriers, cast-in-place barriers, all other permanent longitudinal barriers, crash cushions, cable barriers, cable barrier terminals, bridge rails, bridge rail transitions, all other terminals, sign supports, and all other breakaway hardware) as listed throughout the Standard Specifications and/or the Standard Drawings, or both, is now replaced with the requirements of meeting the 2016 version of MASH after December 31, 2019. This change applies to new permanent installations and to full replacements of existing installations.

At the preconstruction conference or prior to starting any work on the project, the Contractor shall submit a letter stating that the traffic control devices and permanent safety hardware devices as outlined within the paragraph above that are to be used on the project are certified to meet MASH 2016.

When a MASH 2016-compliant device does not exist for the new permanent installations and/or full replacement installations of permanent safety hardware devices, as listed above, a MASH 2009-compliant or a NCHRP 350-compliant device may be proposed by the Contractor for the project. A written request for such instances must be submitted by the Contractor either at the preconstruction conference or prior to starting any work on the project. The Contractor shall submit the following items to the Project Engineer: (1) a detailed list of the proposed devices and locations thereof; and (2) certification letters indicating that the proposed devices are compliant with either MASH 2009 or NCHRP 350.

When a MASH 2016-compliant device does not exist for the temporary work zone traffic control devices (Category 1, Category 2, and Category 3 devices) , a MASH 2009-compliant or a NCHRP 350-compliant device may be proposed by the Contractor for the project. Temporary work zone traffic control devices (Category 1, Category 2, and Category 3 devices) that are MASH 2009-compliant or NCHRP 350–compliant that have been in use prior to December 31, 2019, and that have a remaining service life may be proposed for use throughout their normal service life on the project by the Contractor. For either of these scenarios for temporary work zone traffic control devices, a written request must be submitted by the Contractor either at the preconstruction conference or prior to starting any work on the project. The Contractor shall submit the following items to the Project Engineer: (1) a detailed list of the proposed devices and locations thereof; and (2) certification letters indicating that the proposed devices are compliant with either MASH 2009 or NCHRP 350.

Work will only be allowed to proceed after the Department has granted written concurrence(s) with the proposed request(s) as listed above.

MISSISSIPPI DEPARTMENT OF TRANSPORTATION

SECTION 904 - NOTICE TO BIDDERS NO. 2273 **CODE: (SP)**

DATE: 02/12/2020

SUBJECT: Mississippi Special Fuel Tax Law

Bidder's attention is brought to the second paragraph of Subsection 107.02 of the Standard Specifications which states that all Contractors and Subcontractors must comply with all requirements contained in the Mississippi Special Fuel Tax Law, Section 27-55-501, *et seq*. Attached are two Fact Sheets provided by the Mississippi Department of Revenue (MDOR) with additional information.

DEPARTMENT OF REVENUE
STATE OF MISSISSIPPI

Gasoline and Dyed Diesel Used for Non-Highway Purposes

Mississippi provides a reduced rate for gasoline and dyed diesel used for non-highway purposes. The reduced rates are 6.44 cents per gallon and 5.75 cents per gallon of gasoline or dyed diesel. These fuels are generally taxed at 18 cents per gallon if for on road use.

Gasoline Used for Non-Highway Purposes

You may be entitled to a refund of 11.56 cents per gallon (making this an equivalent to a tax rate of 6.44 cents per gallon) if you desire to purchase gasoline to be used off road. The gasoline must be used for agricultural, maritime, industrial, manufacturing, domestic or non-highway purposes only.

Examples of non-highway include gasoline used in boats, golf carts, machinery used for manufacturing or farm equipment used exclusively in plowing, planting or harvesting farm products.

Refund Gasoline User

The refund is based on the amount of gallons used. Before a refund is issued, you are required to…

1. Obtain a refund gasoline user's permit and a certificate for refund booklet from the Department of Revenue;
2. Have a storage tank marked "REFUND GASOLINE"; and,
3. Purchase the gasoline from someone who holds a refund gasoline dealer's permit.

No refund will be allowed for gasoline used in motor vehicles owned or operated by a government entity or used in Mississippi government contracts.

Refund Gasoline Dealer

You must obtain a refund gasoline dealer's permit from the Department of Revenue before selling refund gasoline. At no time should the gasoline be delivered to a tank that is not properly marked. The gasoline must be dyed a distinctive mahogany color at the time of delivery.

The Department of Revenue may waive the dye requirement if the dye may cause damage to the equipment. The refund gasoline user is required to obtain the waiver from the Department of Revenue.

Dyed Diesel Used for Non-Highway Purposes

Unlike gasoline, you are not required to apply for a refund if you desire to purchase dyed diesel to be used off road. Mississippi provides a reduced rate of 5.75 cents per gallon on dyed diesel used off road. Diesel used on road is subjected to 18 cents per gallon. Dyed diesel used in motor vehicles owned or operated by a government entity or used in Mississippi government contracts will be subjected to 18 cents per gallon.

Dyed Diesel Used on the Highway

Any person who purchases, receives, acquires or uses dyed diesel for highway use will be liable to pay 18 cents per gallon and subject to a penalty in the amount of $1000.

Identifying Dyed Diesel

Storage facilities for dyed diesel must be plainly marked "NONHIGHWAY DIESEL FUEL" or "NONHIGHWAY KEROSENE". Retailers are also required to mark all pumps or dispensing equipment.

This fact sheet is intended to help you become more familiar with Mississippi tax laws and your rights and responsibilities under the laws. Nothing in this fact sheet supersedes, alters, or otherwise changes any provisions of the tax law, regulations, court decisions, or notices.

Petroleum Tax Bureau
P. O. Box 1033
Jackson, MS 39215-1033
Phone: (601) 923-7150

DEPARTMENT OF REVENUE
STATE OF MISSISSIPPI

Special Fuel Used on Government Contracts

State and Local Government Contracts

Special fuel purchased, acquired or used in performing contracts with the State of Mississippi, counties, municipalities or any political subdivision is taxed at a rate of 18 cents per gallon. Special fuel includes but is not limited to the following:

- Dyed diesel fuel;
- Kerosene;
- Undyed diesel fuel; and,
- Fuel oil.

State and local government contracts include construction, reconstruction and maintenance or repairs of projects such as roads, bridges, water systems, sewer systems, buildings, drainage canals and recreational facilities. The Department of Revenue may require contractors to remit the excise tax directly to the state in lieu of paying the tax to a distributor.

Special Fuel Direct Pay Permit

Contractors that remit the excise tax to the state will be issued a Special Fuel Direct Pay Permit. This permit relieves the distributor from collecting the tax and requires the contractor to file a monthly special fuel return. The distributor should include the contractor's permit number on all invoices that are related to tax-free sales.

The contractor is required to furnish a surety or cash bond guaranteeing the payment of the excise tax prior to receiving the Special Fuel Direct Pay Permit. The Department of Revenue may accept a contractors tax bond if the bond covers the excise tax levied on special fuel.

Special Fuel Distributors

If the contractor does not have a Special Fuel Direct Pay Permit, distributors are required to collect the 18 cents excise tax and remit the tax to the Department of Revenue. The additional 12.25 cents levied on special fuel (excluding undyed diesel) should be reported on schedules 5F and 5G of the special fuel return.

Environmental Protection Fee

Special fuel distributors are required to collect the environmental protection fee even if the contractor has a Special Fuel Direct Pay Permit. The fee is levied at 4/10^{ths} of a cent per gallon. The fee is suspended or reinstated when the trust fund has exceeded or fallen below the obligatory balance.

Penalties

Any person who knowingly and willfully purchases untaxed fuel for use in equipment utilized on a road or highway construction site in this state is guilty of a misdemeanor and, upon conviction, shall be fined not less than $1,000 or more than $100,000, or imprisoned in the county jail for not more than one year, or both.

This fact sheet is intended to help you become more familiar with Mississippi tax laws and your rights and responsibilities under the laws. Nothing in this fact sheet supersedes, alters, or otherwise changes any provisions of the tax law, regulations, court decisions, or notices.

Petroleum Tax Bureau
P. O. Box 1033
Jackson, MS 39215-1033
Phone: (601) 923-7150

MISSISSIPPI DEPARTMENT OF TRANSPORTATION

SECTION 904 - NOTICE TO BIDDERS NO. 2954 **CODE: (IS)**

DATE: **12/01/2020**

SUBJECT: **Reflective Sheeting for Signs**

Bidders are hereby advised that the retroreflective sign sheeting used for signs on this project shall be as listed below and shall meet the requirements of Subsection 721.06.

Temporary Construction Signs

Temporary traffic control (orange) sign sheeting shall be a minimum Type IX Fluorescent Orange sheeting as shown in Special Provision 907-721.

Permanent Signs

Permanent signs, except signs on traffic signal poles/mast arms, shall be as follows:

- Brown background sheeting on guide signs shall be a minimum Type VIII sheeting,
- Green and blue background sheeting on guide signs shall be a minimum Type IX sheeting, and
- All white, yellow, red, fluorescent yellow, and fluorescent yellow/green sheeting shall be Type XI sheeting.

MISSISSIPPI DEPARTMENT OF TRANSPORTATION

SECTION 904 - NOTICE TO BIDDERS NO. 4113 **CODE: (SP)**

DATE: **03/23/2022**

SUBJECT: **Unique Entity ID (SAM) Requirement for Federal Funded Projects**

Bidders are advised that the Prime Contractor must register and maintain a current registration in the System for Award Management (http://sam.gov) at all times during this project. Upon registration, the Contractor will be assigned a SAM Unique Entity ID.

Bidders are also advised that prior to the award of this contract, they MUST be registered, active, and have no active exclusions in the System for Award Management.

MISSISSIPPI DEPARTMENT OF TRANSPORTATION

SECTION 904 - NOTICE TO BIDDERS NO. 4702 **CODE: (SP)**

DATE: 11/22/2022

SUBJECT: App for Traffic Control Reports

Bidders are advised that the Department has created a smart phone App for completing and submitting traffic control reports (Form CSD-762) required on this project. The Contractor who monitors traffic control activities and completes traffic control reports will be required to download and use this App when completing and submitting traffic control reports. The reports will then be readily available to all persons who need access to the forms. The App is free and is available for downloading at the following location.

https://extacctmgmt.mdot.state.ms.us/

MISSISSIPPI DEPARTMENT OF TRANSPORTATION

SECTION 904 - NOTICE TO BIDDERS NO. 5551 **CODE: (IS)**

DATE: **12/06/2023**

SUBJECT: **Federal Bridge Formula**

Bidders are hereby advised that the latest revision of Federal Highway Administration Publication No. FHWA-HOP-06-105, **BRIDGE FORMULA WEIGHTS**, dated August 2006, is made a part of this contract when applicable.

Prior to the preconstruction conference, the Contractor shall advise the Engineer, in writing, what materials, if any, will be delivered to the jobsite via Interstate route(s).

Copies of the **BRIDGE FORMULA WEIGHTS** publication may be obtained by contacting:

Federal Highway Administration
400 7th Street, SW
Washington, DC 20590
(202) 366-2212

or

https://ops.fhwa.dot.gov/freight/publications/brdg_frm_wghts/

MISSISSIPPI DEPARTMENT OF TRANSPORTATION

SECTION 904 – NOTICE TO BIDDERS NO. 8192 **CODE: (SP)**

DATE: 07/07/2026

SUBJECT: Obligation Date

With Respect to the obligation date referenced in Special Provision No. 907-700-3 entitled "Materials and Tests", bidders are advised that this project will be obligated on or after October 1, 2026.

MISSISSIPPI DEPARTMENT OF TRANSPORTATION

SECTION 904 - NOTICE TO BIDDERS NO. 8532 **CODE: (SP)**

DATE: 11/16/2026

SUBJECT: Contract Time

PROJECT: ER-0240-00(021) / 110299301, ER-0008-02(137) / 110300302, ER-0008-02(139) / 110377301 & ER-0008-02(138) /110378301 Covington County

The completion of work to be performed by the Contractor for this project will not be a specified date but shall be when all allowable working days are assessed, or any extension thereto as provided in Subsection 108.06. It is anticipated that the Notice of Award will be issued no later than **December 08, 2026** and the date for Notice to Proceed / Beginning of Contract Time will be **March 10, 2027**.

Should the Contractor request a Notice to Proceed earlier than **March 10, 2027** and it is agreeable with the Department for an early Notice to Proceed, the requested date will become the new Notice to Proceed date. Regardless of whether or not an early Notice to Proceed is granted, contract time will start at the original Notice to Proceed date.

All requests for an early Notice to Proceed shall be sent to the Project Engineer who will forward it to the Contract Administration Division.

26 Working Days have been allowed for the completion of work on this project.

MISSISSIPPI DEPARTMENT OF TRANSPORTATION

SECTION 904 – NOTICE TO BIDDERS NO. 8533 **CODE: (SP)**

DATE: 11/6/2026

SUBJECT: Scope of Work

PROJECT: ER-0240-00(021) / 110299301, ER-0008-02(137) / 110300302, ER-0008-02(139) / 110377301, & ER-0008-02(138) / 110378301 – Covington County

The contract documents do not include an official set of construction plans, but may, by reference, include some Standard Drawings when so specified in a Notice to Bidders entitled, "Standard Drawings."

The work to be accomplished using the pay items and corresponding specifications set forth in the contract is to repair erosion damages at the locations shown below and detailed in the following paragraphs.

Project No.	Route	Location
110299	**SR 589**	**Beaver Creek**
110300	**US 49**	**Retaining Wall F Sta 880+00 / Median Inlet Sta 846+14**
110377	**US 49**	**Big Swamp Creek**
110378	**US 49**	**Double Branch Creek**

Work on the Project shall consist of the following:

1. The Contractor shall erect and maintain construction signing, provide all signs, set up nighttime lane closures (if needed) and traffic handling devices in accordance with the Traffic Control Plan. The cost of this work shall be included in the price bid for pay item 907-618-A: Maintenance of Traffic. All traffic control devices on this project shall comply with the latest version of the MUTCD. Fluorescent orange sheeting shall be used on all construction and traffic control signs except for those designated in the standards to be black legend and border on white background.

2. **110299 -** The Contractor shall perform a saw cut of the existing asphalt along the front face of the existing guardrail and proceed to remove all guardrail along the right edge of the route. The Contractor shall then remove the asphalt from the saw cut to the edge of pavement. Excess Excavation shall be performed sufficiently to create a stable surface to begin placing Borrow Excavation B9-6 according to sheet MDS-1 and Section 203 in the Red Book, as well as matching the existing foreslopes on either end of the site. The Contractor shall then place Solid Sod along foreslopes. Geotextile Fabric and Granular Material, Crushed Stone shall be placed along the shoulder as shown on sheet SDGR-PI and begin placing guardrail as required.

SR 589 Approximately 3.7 MI South of JCT US 49 Box Culvert Washout RT of CL			
Item	Description	Unit	Quantity
202-B006	Removal of Asphalt Paved Shoulders, All Depths	SY	222
202-B158	Removal of Guard Rail, Including Rails, Posts & Terminal Ends	LF	500
203-G002	Excess Excavation, LVM, AH	CY	200
203-EX041	Borrow Excavation, AH, LVM, Class B9-6	CY	275
209-A005	Geotextile Stabilization, Type V, Non-Woven	SY	222
216-A001	Solid Sodding	SY	300
304-H002	Size 610 Crushed Stone Base, LVM	CY	55
503-C010	Saw Cut, Full Depth	LF	550
606-B001	Guard Rail, Class A, Type 1	LF	500
606-E007	Guard Rail, Terminal End Section, Non-Flared	EA	4
630-F006	Delineators, Guard Rail, White	EA	20

3. **110300 -** The Contractor shall remove Excess Excavation from the existing ditch line to the satisfaction of the Engineer. The Contractor shall then place 610 Crushed Stone Base material along the front face of the retaining wall matching the existing shoulder height and slope. The Contractor shall remove all damaged paved ditch to the satisfaction of the Engineer and excess material from behind the wall to a sufficient depth and width to place Geotextile for Subsurface Drainage, Type III, and backfill with the appropriate filter material. See the attached sheet 8006 “Construction Sequence for Cut Retaining Walls” from project 107181 for details concerning the placement of geotextile material and filter material. The Contractor shall then construct Concrete Paved Ditch atop the backfilled retaining wall as well as at the front face of the retaining wall. Solid Sod shall then be placed on all remaining bare ground.

US 49 Approximately 1.83 MI South of JCT SR 589 Site 1 Retaining Wall F			
Item	Description	Unit	Quantity
202-B063	Removal of Concrete Paved Ditch	SY	140
203-G002	Excess Excavation, LVM, AH	CY	150
216-A001	Solid Sodding	SY	500
221-A001	Concrete Paved Ditch	CY	32
304-H002	Size 610 Crushed Stone Base, LVM	CY	100
605-AA001	Geotextile for Subsurface Drainage, Type III	SY	135
605-W002	Filter Material for Combination Storm Drain and/or Underdrains, Type B, FM	CY	100

4. **110300** – The Contractor shall remove any Excess Excavation around the existing inlet as well as in the ditch line and remove any damaged sections of paved ditch to the satisfaction of the Engineer. The Contractor shall then backfill the ditch line and around the existing inlet with Borrow Excavation Class B9-6 to re-establish the ditch line. Concrete Paved Ditch shall be placed where the damaged sections were removed. Solid Sod shall then be placed on all remaining bare ground.

US 49 South of Seminary – 2.47 MI South of JCT SR 589 Site 2 Median Inlet			
Item	Description	Unit	Quantity
202-B063	Removal of Concrete Paved Ditch	SY	25
203-G002	Excess Excavation, LVM, AH	CY	20
203-EX041	Borrow Excavation, AH, LVM, Class B9-6	CY	20
216-A001	Solid Sodding	SY	200
221-A001	Concrete Paved Ditch	CY	6

5. **110377 & 110378** – The Contractor shall place geotextile fabric and 300# riprap at the described locations and any other locations as indicated by the Engineer.

US 49 South of Seminary Bridge Scours					
Project No.	Bridge	Location	Remarks	Fabric	Riprap
110377	90.1A	500’ North of JCT MS 589	LT	99	82
			RT	317	263
110377	90.1B	500’ North of JCT MS 589	LT	318	264
			RT	63	51
110378	89.1B	4,500’ South of JCT MS 589	LT	150	122
			RT	150	121
Totals				1,097 SY	903 TONS

It shall be the responsibility of the Contractor to protect the roadway and all existing structures, such as bridges, culverts, signs, and curbs, from damage occurring as a result of the Contractor’s operations. Damages to existing structures caused by the Contractor’s operations shall be repaired or replaced at no cost to the Department.

Incidental work such as project clean-up, and other incidental work necessary to complete the project will not be measured for separate payment. Such costs shall be included in the price of other items bid.

P.E. HSIP–0008–02(105) 107181 /101000

STATE OF MISSISSIPPI

MISSISSIPPI DEPARTMENT OF TRANSPORTATION

PLAN AND PROFILE OF PROPOSED STATE HIGHWAY FEDERAL AID PROJECT NO. HSIP–0008–02(105)

U.S. HWY. 49 BETWEEN 1.5 MILES NORTH OF FORREST CO. LINE AND MOUNT OLIVE BYPASS COVINGTON COUNTY

STATE	PROJECT NUMBER	SHEET NO.
MISSISSIPPI	HSIP–0008–02(105)	1

GENERAL INDEX

INCLUDED THIS PROJECT		BEGIN WITH SHEET
☒	ROADWAY	1
☒	PERMANENT SIGNS	1001
☒	TRAFFIC SIGNALS	2001
☐	ITS COMPONENTS	3001
☐	LIGHTING	4001
☐	(RESERVED)	5001
☒	ROADWAY STANDARD DWGS	6001
☒	BRIDGE STANDARD DWGS	7001
☒	BRIDGE	8001
☒	CROSS SECTIONS	9001

BRIDGE STRUCTURES REQ'D.

BOX BRIDGES REQ'D.

SCALES

PLAN		1 IN. = 100 FT.
PROFILE	HOR.	1 IN. = 100 FT.
	VERT.	1 IN. = 10 FT.
LAYOUT		1 IN. = 10,000 FT.

FMS CONST. 107181 /301000

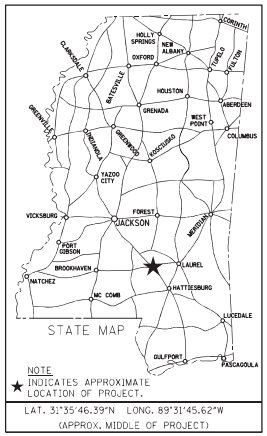

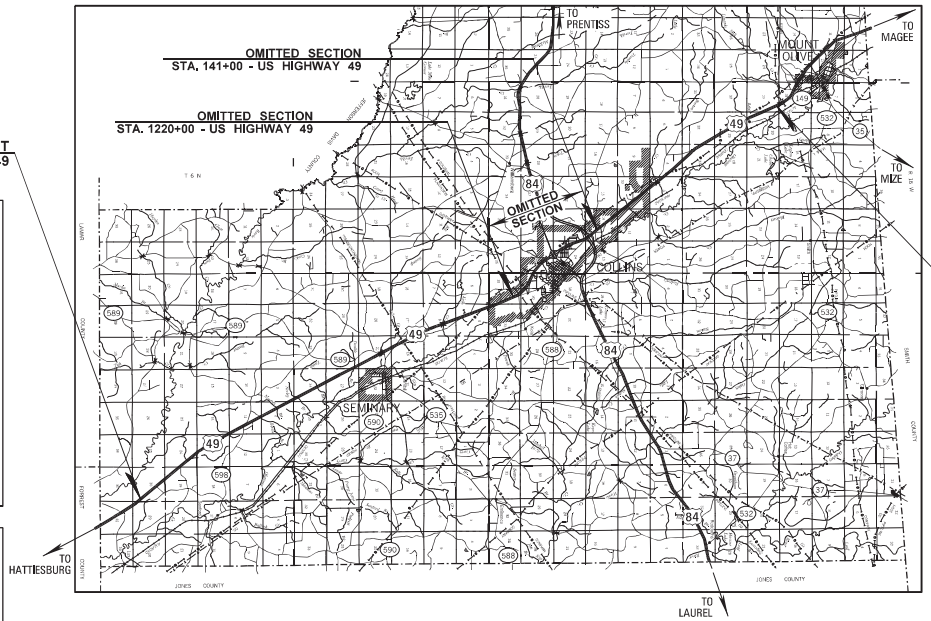

GPS CONTROL NOTES (SOUTH SEGMENT) (B.O.P. TO COLLINS)

HORIZONTAL DATUM: NAD 83 MS EAST ZONE (US SURVEY FEET)

HORIZONTAL MONUMENT	NORTH	EAST
BV0624	681756.44	820563.40
AJ7808	786483.63	756406.57
AA6286	762816.40(SPC MS W)	2429241.09(SPC MS W)

VERTICAL DATUM: NAVD 88 (US SURVEY FEET)

VERTICAL MONUMENT	ELEVATION
49V240	186.280

ALL AZIMUTHS AND DISTANCES ARE GRID VALUES, US SURVEY FEET

CONVERSION VALUES	PROJECT AVERAGE
GROUND TO GRID (COMBINED) FACTOR	0.999988584
GRID TO GEODETIC AZIMUTH	-00° 20' 21"

GPS CONTROL NOTES (NORTH SEGMENT) (COLLINS TO E.O.P.)

HORIZONTAL DATUM: NAD 83 MS EAST ZONE (US SURVEY FEET)

HORIZONTAL MONUMENT	NORTH	EAST
AJ7808	786483.630	756406.570
BV1717	846849.120	713597.680
AA6286	762816.40(SPC MS W)	2429241.09(SPC MS W)

VERTICAL DATUM: NAVD 88 (US SURVEY FEET)

VERTICAL MONUMENT	ELEVATION
49V259	291.715

ALL AZIMUTHS AND DISTANCES ARE GRID VALUES, US SURVEY FEET

CONVERSION VALUES	PROJECT AVERAGE
GROUND TO GRID (COMBINED) FACTOR	1.00000592
GRID TO GEODETIC AZIMUTH	-00° 24' 25"

EQUATIONS

STA. 1253+73.44 =	STA. 1254+44.64	-41.20'
STA. 1397+55.71 =	STA. 140+00.00	+125,755.71'
	TOTAL	+125,714.51'

EXCEPTIONS

STA. 1220+00 TO STA. 141+00 17,814.71'

EROSION CONTROL PLANS ROADWAY PLANS

LENGTH DATA

LENGTH OF ROADWAY	124,718. FT.	23.621 MI.
LENGTH OF BRIDGES	1,253 FT.	0.237 MI.
LENGTH OF PROJECT (NET)		23.384 MI.
LENGTH OF EXCEPTIONS	17,814 FT.	3.374 MI.
LENGTH OF PROJECT (GROSS)		20.010 MI.

DESIGN CONTROL

65 MPH = V (SPEED DESIGN)

ADT (2016) = 24000 ; ADT (2036) = 36000

DHV = 4000 ; D = 50 % T= 20 %

PERMITS ACQUIRED BY MDOT

WETLANDS AND WATERS PERMITS (NECESSARY FOR ULTIMATE IMPROVEMENTS ONLY):

	WATERS	WETLANDS
NATIONWIDE #14	N	N
NATIONWIDE (OTHER)*	Y	Y
GENERAL*	N	N
INDIVIDUAL (404)*	N	N

* ACQUISITION OF PERMITS FOR TEMPORARY IMPACTS DURING CONSTRUCTION ARE THE RESPONSIBILITY OF THE CONTRACTOR

STORMWATER PERMIT [Y]

Y REQUIRED, CNOI SUBMITTED BY MDOT (DISTURBED AREA=1 ACRES)

S REQUIRED, SCNOI TO BE SUBMITTED BY CONTRACTOR (1 TO 4.99 ACRES)

N NO STORMWATER PERMIT REQUIRED (<1 ACRE)

APPROVED BY: Jca

P S & E DATE: 05/31/16

APPROVED:

DEPUTY EXECUTIVE DIRECTOR / CHIEF ENGINEER

EXECUTIVE DIRECTOR

MDOT MISSISSIPPI DEPARTMENT OF TRANSPORTATION

BY DATE REVISIONS

Notice to Bidders No. 8533 - Cont.

PROJECT TITLE DIVISION MISSISSIPPI DEPARTMENT OF TRANSPORTATION

35

5/31/2016 1:41:28 PM SLE_DGN

For Information Only

STATE	PROJECT NO.
MISS.	HSIP-0008-02(105)

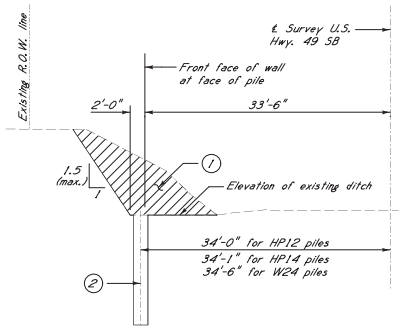

STAGE 1 CONSTRUCTION

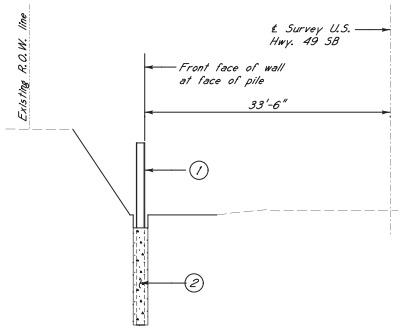

STAGE 2 CONSTRUCTION

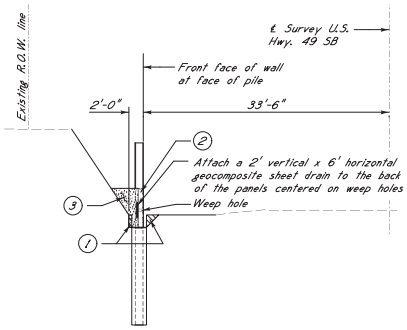

STAGE 3 CONSTRUCTION

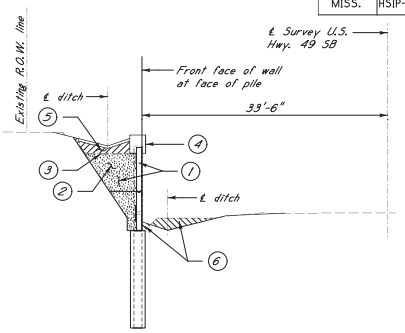

STAGE 4 CONSTRUCTION

CONSTRUCTION SEQUENCE FOR CUT WALLS

Typical for walls "D" to "H" and "K" to "T".

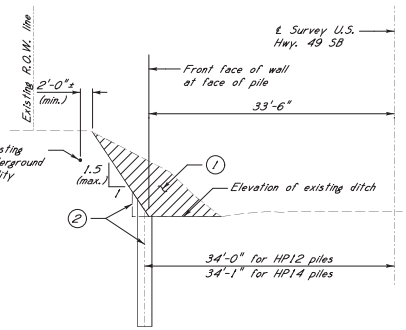

STAGE 1 CONSTRUCTION

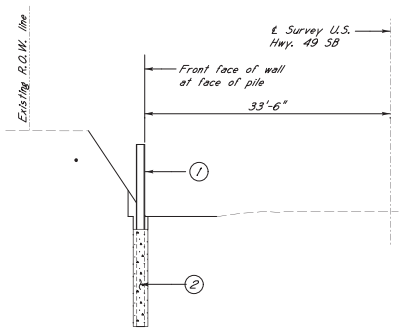

STAGE 2 CONSTRUCTION

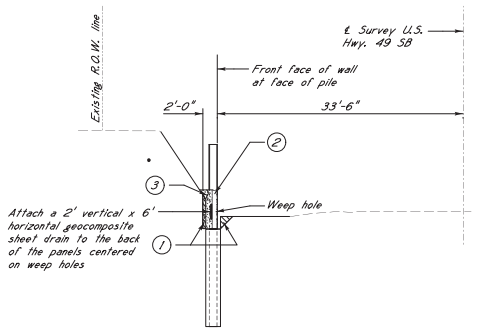

STAGE 3 CONSTRUCTION

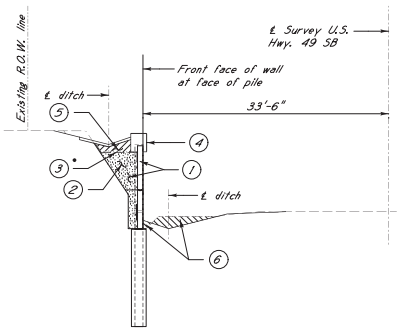

STAGE 4 CONSTRUCTION

CONSTRUCTION SEQUENCE FOR CUT WALLS

Typical for walls "P" and "Q" with underground utilities inside the R.O.W.

RECOMMENDED SEQUENCE OF CONSTRUCTION:

STAGE 1:
1. Locate all existing underground utilities inside the R.O.W. and verify there are no conflicts with the proposed construction. Excavate existing embankment to a max 1.5V:1H slope to the bottom of the existing ditch. Top of cut shall be no closer than 2'-0" to vertical plane of an existing utility.
2. Excavate pocket as needed for auger and drill pre-formed pile holes to the diameter and tip elevation shown in the MINIMUM PILE CUTOFF & TIP ELEVATION SCHEDULE for each wall.

STAGE 2:
1. Lower piles into pre-formed pile holes and brace as needed to maintain alignment. See sheet no. TD1 for notes on required accuracy of pile placement.
2. Backfill with Class "B" concrete to the encasement top elevation shown in the MINIMUM PILE CUTOFF & TIP ELEVATION SCHEDULE for each wall. Concrete shall be placed using a tremie method per the requirements in Section 803.03.2.7 of the Mississippi Standard Specifications.

STAGE 3:
1. Excavate existing embankment to the bottom of precast panel elevation shown in the PRECAST PANEL SCHEDULE for each wall.
2. Install the bottom precast panels between the flanges of the piles and weld the embedded angle to the pile flange at the front face of wall except for panel edges adjacent to an expansion joint.

STAGE 3: (cont.)
3. Backfill with Type B filter material to an elevation near the top edge of the bottom panels. Compact all sand backfill in 2' lifts by saturating with water. All vertical cuts must be backfilled by the end of each work day (do not leave vertical embankment cuts standing overnight).

STAGE 4:
1. Add rows of panels and backfill as described in STAGE 3. Each row of panels must be backfilled and compacted prior to installing the next row.
2. Complete backfill of top panel with Type B filter material to the bottom of wall coping and cover with geotextile for subsurface drainage, Type III. Lap geotextile 2" over the back of the panels as the fill is placed. Place upper 5' of sand backfill in 6" loose lifts and mechanically compact each lift to at least 95% of maximum dry density per ASTM D698 using hand operated equipment.
3. Lay geotextile on top of the compacted filter material. Lap the cut slopes and joints along sides 2'. See sheet no. TD4 for additional details.
4. Form and pour the top of wall coping using Class "B" concrete.
5. Cap granular fill with fill per the requirements in roadway plans. Complete shoulder and paved ditch construction per roadway plans.
6. Fill and excavate as needed to complete the ditch at the bottom of wall per the roadway plans.

NOTES:
- At any location, the maximum time between completion of Stage 1-1 and the completion of Stage 4-2 shall not exceed thirty (30) calendar days.
- The Contractor is responsible for maintaining stability of temporary cuts by using shoring, if necessary.
- The Contractor shall maintain an open pile hole until the concrete encasement has been placed.
- The Contractor should minimize the number of construction personnel working between the precast panels and the temporary embankment cut until the sand backfill is 5' below the bottom of coping.

LEGEND:
(1) = Construction stage sequence number (see sequence description)

NEEL-SCHAFFER
Solutions you can build upon

RANDY BOUDREAUX REGISTERED PROFESSIONAL ENGINEER #11203 STATE OF MISSISSIPPI
DATE: 04/19/16

DATE	REVISIONS	BY

MISSISSIPPI DEPARTMENT OF TRANSPORTATION
US HWY. 49 RETAINING WALLS

CONSTRUCTION SEQUENCE FOR CUT RETAINING WALLS

PROJECT 107181-301000
HSIP-0008-02(105)
COVINGTON COUNTY

WORKING NUMBER TD2 OF 15
SHEET NUMBER 36

DESIGNER Randy Boudreaux, P.E. CHECKER Lee A. Cutcliff, III, P.E.
DETAILER Randy Boudreaux, P.E. ISSUE DATE
DIRECTOR OF STRUCTURES, STATE BRIDGE ENGINEER - JUSTIN WALKER PE.
DEP. DIRECTOR OF STRUCTURES, ASSIST. STATE BRIDGE ENGINEER - SCOTT WESTERFIELD PE.

FILE: S:\Projects\12236.008 Hwy 49 S Safety Plans Drawings\12236-TD2-Construction Sequence For Cut Retaining Walls.dgn
DATE: 4/19/2016TIME: 3:37:37 PM USER: MWP

36

- 5 -

Notice to Bidders No. 8533 - 6/7/21

For Information Only

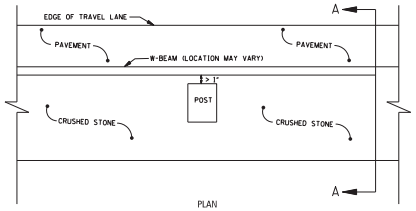

PAVEMENT LEAVE–OUT AREA FOR GUARDRAIL POSTS
SINGLE–FACED GUARDRAIL (CRUSHED STONE OPTION)

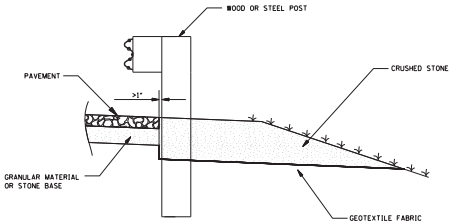

SECTION A–A

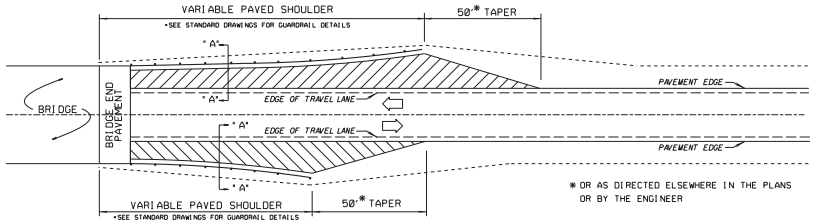

TYPICAL DETAIL OF PAVED SHOULDERS AT BRIDGE ENDS
(2-WAY TRAFFIC)
SEE SECTION 'A'-'A'

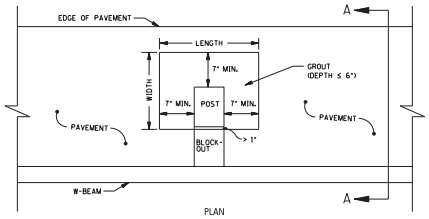

PAVEMENT LEAVE–OUT AREA FOR GUARDRAIL POSTS
SINGLE–FACED GUARDRAIL (GROUT OPTION)

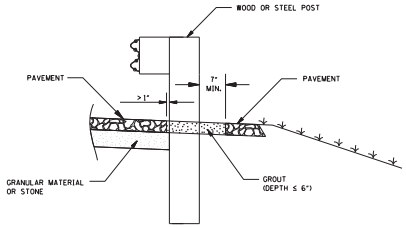

SECTION A–A

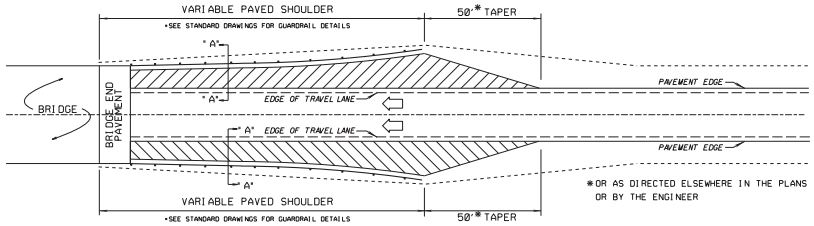

TYPICAL DETAIL OF PAVED SHOULDERS AT BRIDGE ENDS
(1-WAY TRAFFIC)
SEE SECTION 'A'-'A'

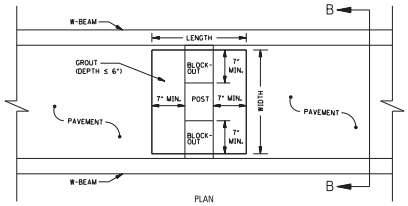

PAVEMENT LEAVE–OUT AREA FOR GUARDRAIL POSTS
DOUBLE–FACED GUARDRAIL

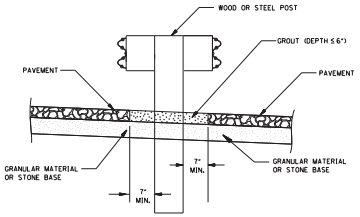

SECTION B–B

GENERAL NOTES FOR CRUSHED STONE OPTION

1. GUARDRAIL POSTS SHALL NOT BE COMPLETELY SURROUNDED BY PAVEMENT.
2. PAVEMENT LEAVE-OUT AREAS ARE REQUIRED FOR STEEL AND WOOD POSTS.
3. STANDARD EMBEDMENT DEPTHS STILL APPLY, MEASURED FROM THE TOP OF THE PROJECTED PAVEMENT SURFACE.
4. IMMEDIATELY PRIOR TO PLACING GEOTEXTILE FABRIC AND CRUSHED STONE ON THE GUARDRAIL PAD, THE ENTIRE AREA SHALL BE TREATED UNIFORMLY WITH A SOIL STERILANT. THE SOIL STERILANT SHALL BE APPLIED AT THE MAXIMUM RATE RECOMMENDED ON THE MANUFACTURER'S LABEL FOR PERENNIAL WEED CONTROL. ANY GRANULAR OR PELLETIZED SOIL STERILANT THAT IS APPROVED BY THE ENGINEER MAY BE USED. SEPARATE PAYMENT WILL NOT BE MADE FOR TREATING THE GUARDRAIL PAD AREA WITH SOIL STERILANT.

GENERAL NOTES FOR GROUT OPTION

1. GUARDRAIL POSTS SHALL NOT BE COMPLETELY SURROUNDED BY PAVEMENT. THE AREA BEHIND AND LATERAL OF THE POST SHALL HAVE A MINIMUM 7" CLEARANCE FROM THE PAVEMENT. THIS AREA SHALL BE FILLED WITH A LOW STRENGTH GROUT WITH A MAXIMUM 28 DAY COMPRESSIVE STRENGTH OF 120 PSI.
2. GROUT SHALL BE INSTALLED AT A DEPTH EQUAL TO THE SURROUNDING PAVEMENT, UP TO A MAXIMUM OF 6". IF SURROUNDING PAVEMENT IS GREATER THAN 6", THE DIFFERNCE SHALL BE FILLED IN WITH SHOULDER GRANULAR MATERIAL.
3. COST OF GROUT SHALL BE ABSORBED IN THE COST OF OTHER ITEMS BID.
4. PAVEMENT LEAVE-OUT AREAS ARE REQUIRED FOR STEEL AND WOOD POSTS.
5. STANDARD EMBEDMENT DEPTHS STILL APPLY, MEASURED FROM THE TOP OF THE PROJECTED PAVEMENT SURFACE.

MIN. PAV'T LEAVE-OUT AREA

POST	SINGLE-FACED		DOUBLE-FACED	
	LENGTH (IN.)	WIDTH (IN.)	LENGTH (IN.)	WIDTH (IN.)
6"x8" WOOD	20	15	20	22
8"x8" WOOD	22	15	22	22
10"x10" WOOD	24	17	24	24
W6x9 STEEL	18	13	18	20

NOTE: THE ALTERNATIVES SHOWN HEREIN APPLY TO ALL GUARDRAIL CONSTRUCTION WHERE MOW STRIPS ARE ADDED.

DEPARTMENT OF TRANSPORTATION
STATE OF MISSISSIPPI

MDOT
MISSISSIPPI DEPARTMENT OF TRANSPORTATION

DESIGNED BY:
DETAILED BY:
CHECKED BY:
DATE:

FMS CON:
PROJECT NO.: - 6 -
COUNTY:

GUARDRAIL: POST INSTALLATION, TYPICAL DETAILS

SHEET ID
SDGRPI
SHEET NO.
1

Notice to Bidders, Standard Specifications, and Contract Plans
Effective August 1, 2019

37

PLAN SHEET

10/8/2026 3:43:47 PM US 49 Storm Damage.dgn

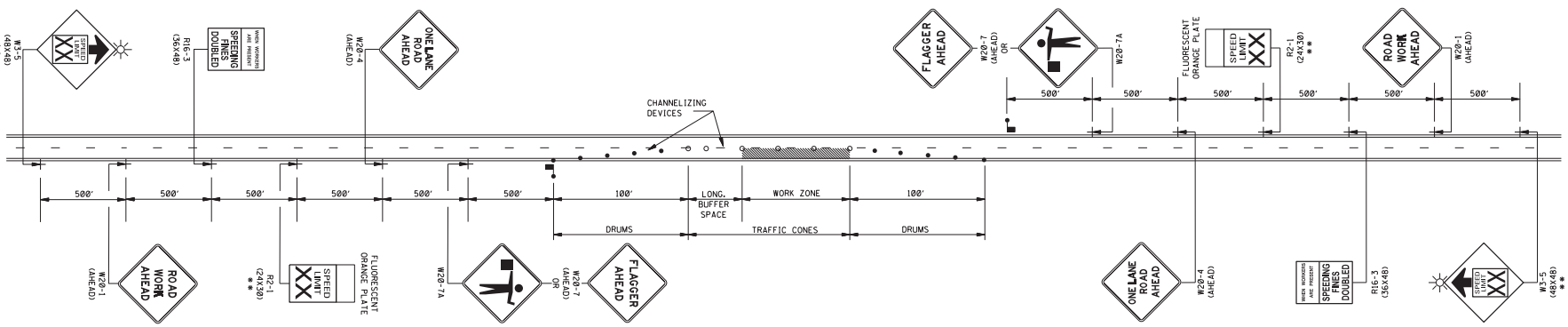

LEGEND

- FLAGGER
- ● RETROREFLECTIVE FREE-STANDING PLASTIC DRUMS
- ○ TRAFFIC CONES (28" HEIGHT MINIMUM)
- ** THE SPEED ON R2-1 AND W3-5 SIGNS SHALL BE 10 MPH LESS THAN THE POSTED SPEED LIMIT UNLESS OTHERWISE DIRECTED BY COMMISSION ORDER.

GENERAL NOTES:

1. THE LOCATION OF CHANNELIZING DEVICES AND THE WORK AREA LAYOUT SHALL BE BASED ON THE CRITERIA IN THE FOLLOWING TABLE. FLAGGER STATIONS SHALL BE LOCATED SUCH THAT APPROACHING VEHICLES WILL HAVE SUFFICIENT DISTANCE TO STOP. VALUES IN STOPPING SIGHT DISTANCE COLUMN MAY BE USED AS A MINIMUM FOR THIS DISTANCE.

POSTED SPEED AND/OR DESIGN SPEED	MAXIMUM CHANNELIZING DEVICE SPACING (ft)		LONGITUDINAL BUFFER SPACE (ft)†	STOPPING SIGHT DISTANCE
	TAPER	ALONG LANE LINE & WORK ZONE		
mph				
25	20	50	55	155
30	20	60	85	200
35	20	70	120	250
40	20	80	170	305
45	20	90	220	360
50	20	100	280	425
55	20	110	335	495
60	20	120	415	570
65	20	130	485	645

† NOTE: BUFFER SPACE MAY BE ADJUSTED AS NEEDED ACCORDING TO ROADWAY GEOMETRY TO MEET SIGHT DISTANCE REQUIREMENTS, AS DIRECTED BY THE ENGINEER.

2. ALL CHANNELIZING DEVICES SHALL BE A MINIMUM OF 28" IN HEIGHT.
3. DIAMOND SHAPED TRAFFIC CONTROL SIGNS SHALL BE A MINIMUM OF 36" x 36" AND BLACK COPY ON FLUORESCENT ORANGE SHEETING.
4. WHEN WORK ZONE IS NO LONGER NEEDED, ALL SIGNS SHALL BE COVERED OR REMOVED AND ALL CHANNELIZING DEVICES SHALL BE MOVED TO THE SHOULDER EDGE.
5. ADDITIONAL FLAGGERS MAY BE NEEDED AS DIRECTED BY THE ENGINEER.
6. WHEN WORK IS REQUIRED AT NIGHT, FLAGGER STATIONS SHALL BE ILLUMINATED.
7. CHANNELIZING DEVICE TYPES FOR:
   A. APPROACH AND EXIT TAPERS- RETROREFLECTIVE PLASTIC DRUMS
   B. ALONG LANE LINE AND WORK ZONE- TRAFFIC CONES (28" HEIGHT)
8. ALL TRAFFIC CONTROL ITEMS SHOWN ON THIS SHEET WILL NOT BE MEASURED FOR SEPARATE PAYMENT. THIS WORK SHALL BE INCLUDED IN THE PRICE BID FOR MAINTENANCE OF TRAFFIC.

DISTANCE BETWEEN SIGNS

ROAD TYPE	A	B	C
URBAN (35 MPH OR LESS)	100 FT.	100 FT.	100 FT.
URBAN (40 - 70 MPH)	350 FT.	350 FT.	350 FT.
RURAL	500 FT.	500 FT.	500 FT.
EXPRESSWAY / FREEWAY	1000 FT.	1500 FT.	2640 FT.

MISSISSIPPI DEPARTMENT OF TRANSPORTATION

DESIGNED BY:
DETAILED BY:
CHECKED BY:
DATE:

FMS CON:
PROJECT NO.: - 7 -
COUNTY:

TRAFFIC CONTOL PLAN WITH FLAGGER
(ONE LANE CLOSURE OF TWO WAY TRAFFIC)

SHEET ID
SDTCP-1

SHEET NO.
2

PLAN SHEET

10/8/2026 3:43:47 PM US 49 Storm Damage.dgn

STATE	PROJECT NO.
MISS.	

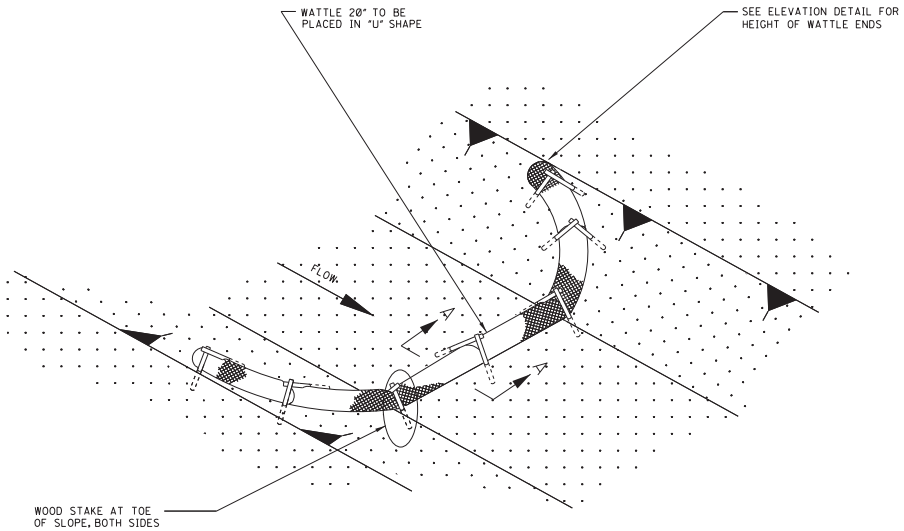

DETAIL (DITCH CHECK)

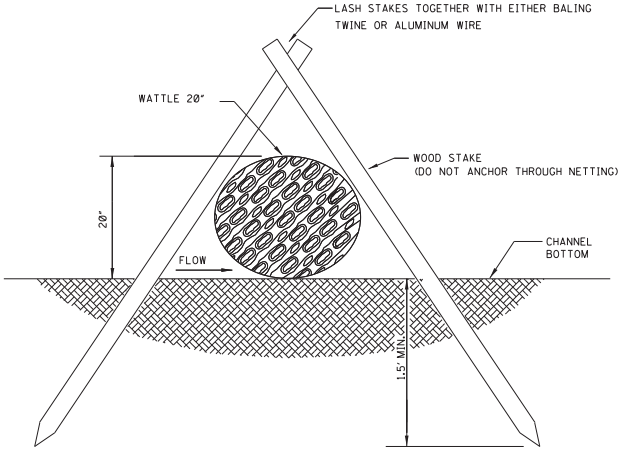

SECTION A–A

NOTE: END POINTS "A" SHALL BE HIGHER THAN FLOWLINE POINT "B".

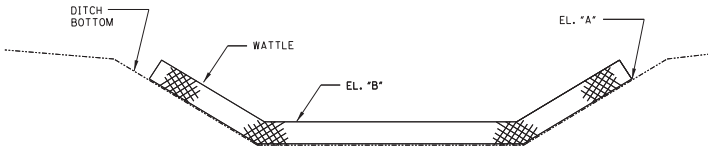

ELEVATION DETAIL

NOTES:

1. WATTLE DITCH CHECKS CAN BE USED FOR VELOCITY REDUCTION AND CONTROL OF SEDIMENT TRANSPORT UNDER LOW TO MEDIUM FLOW CONDITIONS.
2. THE PLACEMENT INTERVAL BETWEEN WATTLE DITCH CHECK SHALL BE 100' UNLESS SHOWN OTHERWISE ON THE PLANS OR EROSION CONTROL PLAN APPROVED BY THE ENGINEER. SEE SPACING GUIDANCE ON WK. NO. ECD-4.
3. ANCHORING WOOD STAKES SHALL BE SIZED, SPACED, DRIVEN, AND BE OF A MATERIAL THAT EFFECTIVELY SECURES THE CHECK. STAKE SPACING SHALL BE A MAXIMUM OF THREE FEET. ALL NON-DEGRADABLE MATERIALS SHALL BE REMOVED WHEN NO LONGER NEEDED.
4. TRENCHING OF WATTLES MAY BE NECESSARY IF PIPING BECOMES EVIDENT.
5. WATTLES SHOULD NOT BE USED IN HARD BOTTOM CHANNELS.
6. IN THE EVENT WATTLES CANNOT BE SECURED IN PLACE USING WOOD STAKES, SAND BAGS MAY BE USED IN LIEU OF WOOD STAKES IN ORDER TO SECURE THE WATTLES IN PLACE. IF SANDS BAGS ARE USED IN THIS APPLICATION THEY WILL NOT BE A SEPARATE PAY ITEM.

DATE	REVISION	BY

MISSISSIPPI DEPARTMENT OF TRANSPORTATION
ROADWAY DESIGN DIVISION
STANDARD PLAN

DETAILS OF EROSION CONTROL WATTLE DITCH CHECK

ISSUE DATE: AUGUST 01, 2017

MDOT
WORKING NUMBER ECD-6
SHEET NUMBER 6106

Notice to Bidders No. 8533-Rev.

STATE	PROJECT NO.
MISS.	

NOTE: SILT FENCE OR SANDBAGS MAY ALSO BE USED FOR THIS APPLICATION.
HAY BALES NOT ACCEPTABLE DURING THIS STAGE.

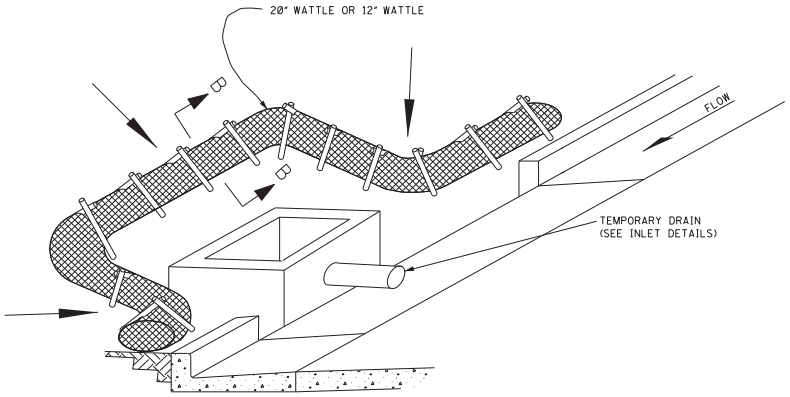

CURB INLET PROTECTION (STAGE 2)

SINGLE OR DOUBLE WING INLET

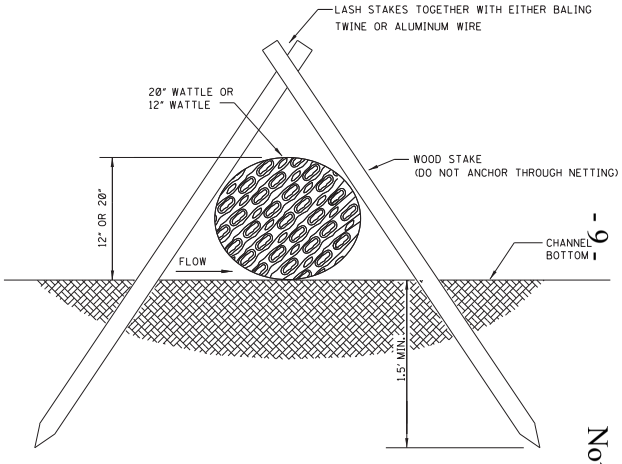

SECTION B–B

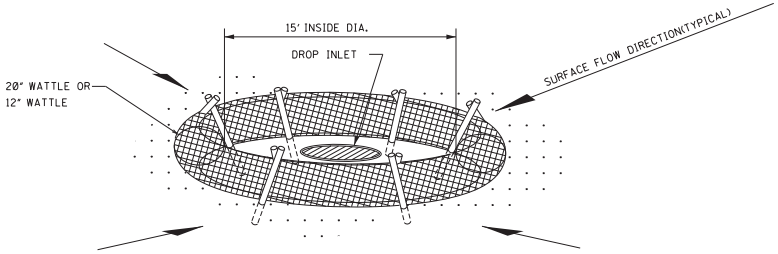

DROP INLET PROTECTION

NOTES:

1. ANCHORING STAKES SHALL BE SIZED, SPACED, AND BE OF A MATERIAL THAT EFFECTIVELY SECURES THE WATTLE. STAKE SPACING SHALL BE A MAXIMUM OF THREE FEET.
2. OVERLAP ENDS OF WATTLES PER MANUFACTURER'S RECOMMENDATIONS (1' MIN., 3' MAX.)
3. TRENCHING OF WATTLES MAY BE NECESSARY IF PIPING BECOMES EVIDENT.
4. IN THE EVENT WATTLES CANNOT BE SECURED IN PLACE USING WOOD STAKES, SANDBAGS MAY BE USED IN LIEU OF WOOD STAKES IN ORDER TO SECURE WATTLES IN PLACE. COST OF SANDBAGS USED IN THIS APPLICATION SHALL BE INCLUDED IN OTHER ITEMS BID.

BY	REVISION	DATE

MISSISSIPPI DEPARTMENT OF TRANSPORTATION
ROADWAY DESIGN DIVISION
STANDARD PLAN

INLET PROTECTION DETAILS OF WATTLES

ISSUE DATE: AUGUST 01, 2017

MDOT

WORKING NUMBER	SHEET NUMBER
ECD-13	6113

Notice to Bidders No. 8533--Rev.

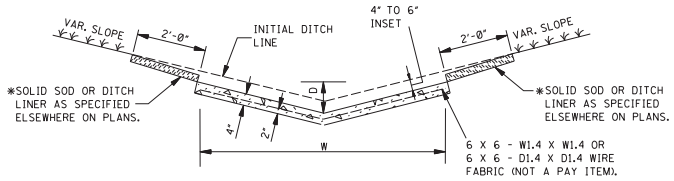

"V" TYPE SECTION

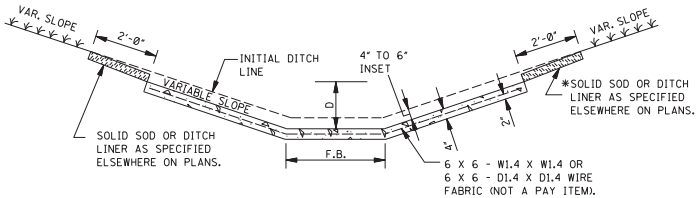

FLAT BOTTOM SECTION

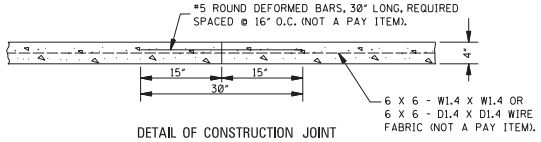

DETAIL OF CONSTRUCTION JOINT

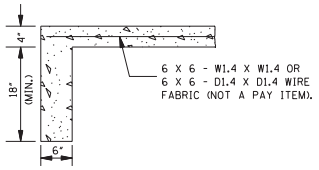

DETAIL OF TOE WALL

NOTE: TOE WALL REQUIRED UPSTREAM AND DOWNSTREAM.

CONCRETE PAVED DITCH

NOTES:

1. CONCRETE PAVED DITCHES SHALL BE GROOVED AT 20'-0" INTERVALS. THE GROOVES SHALL BE CUT TO A DEPTH OF NOT LESS THAN 1".
2. DIMENSIONS D & W ARE AS FOLLOWS:
   D(MINIMUM) = 6"
   D(NOMINAL) = 9"
   W(MINIMUM) = 24"
3. CHAIR SUPPORTS FOR THE WIRE MESH WILL NOT BE REQUIRED. HOWEVER, THE CONTRACTOR SHALL PLACE THE WIRE MESH IN A SATISFACTORY AND WORKMANLIKE MANNER TO ENSURE THAT THE FINAL POSITION IS REASONABLY NEAR THE POSITION INDICATED.

*4. CENTER ROW OF STAPLES MAY BE OMITTED ON DITCH LINER.

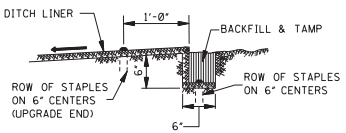

ANCHOR TRENCH DETAIL

NOTE: ANCHOR TRENCH REQUIRED AT THE BEGINNING AND ENDING OF EACH AREA TO BE COVERED, EXCEPT DOWNSTREAM END ADJOINING A STRUCTURE.

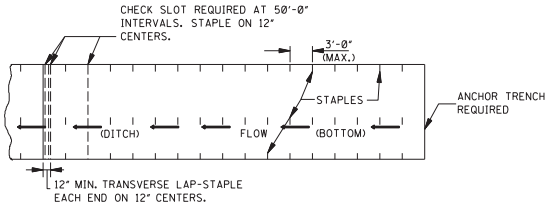

PLAN

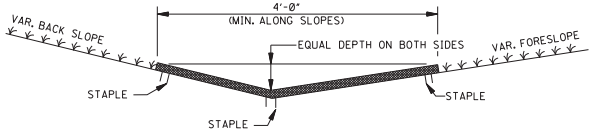

SECTION

DITCH LINER TREATMENT

(EXCELSIOR BLANKET, JUTE MESH OR EROSION CONTROL FABRIC)

NOTE: DITCHES TREATED WITH DITCH LINER WILL BE VEGETATED PRIOR TO TREATMENT, UNLESS OTHERWISE INDICATED.

STATE	PROJECT NO.
MISS.	

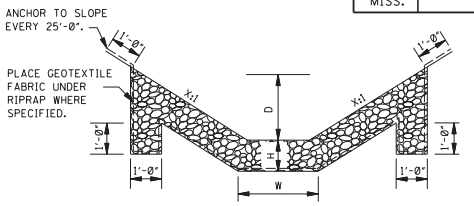

FLAT BOTTOM SECTION

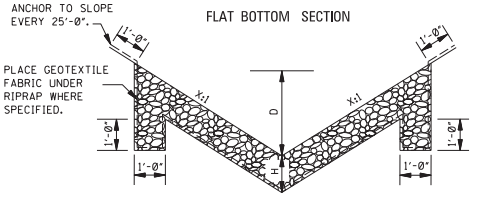

"V" TYPE SECTION

RIPRAP TREATMENT

NOTES:

1. DIMENSIONS D, W AND X ARE VARIABLE AND ARE SHOWN ELSEWHERE ON THE PLANS.
2. THE RIPRAP SIZE AND MINIMUM DEPTH "H" FOR RIPRAP TREATMENT ARE AS FOLLOWS.

RIPRAP SIZE & MINIMUM DEPTH "H"	
H (in)	RIPRAP SIZE (lbs)
12"	100
18"	300

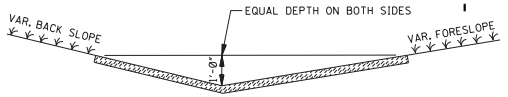

SOLID SOD TREATMENT

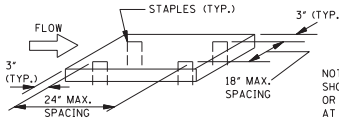

NOTE: SOLID SOD (STRIPS OR BLOCKS) SHOULD BE STAPLED, PINNED, PEGGED OR STAKED AT THE FOUR CORNERS OR AT THE MAXIMUM SPECIFIED SPACING.

GENERAL NOTE:

1. FOR LOCATION OF APPROPRIATE DITCH TREATMENTS, SEE PLAN SHEETS DENOTED BY THE FOLLOWING LEGEND OR AS DIRECTED BY THE ENGINEER.

DITCH LINER
SOLID SOD
CONCRETE PAVED DITCH
RIPRAP

BY	REVISION	DATE

MISSISSIPPI DEPARTMENT OF TRANSPORTATION
ROADWAY DESIGN DIVISION
STANDARD PLAN

DETAILS OF TYPICAL DITCH TREATMENTS

ISSUE DATE: AUGUST 01, 2017

MDOT
WORKING NUMBER DT-1
SHEET NUMBER 6123

Notice to Bidders No. 8533-Rev.

STATE	PROJECT NO.
MISS.	

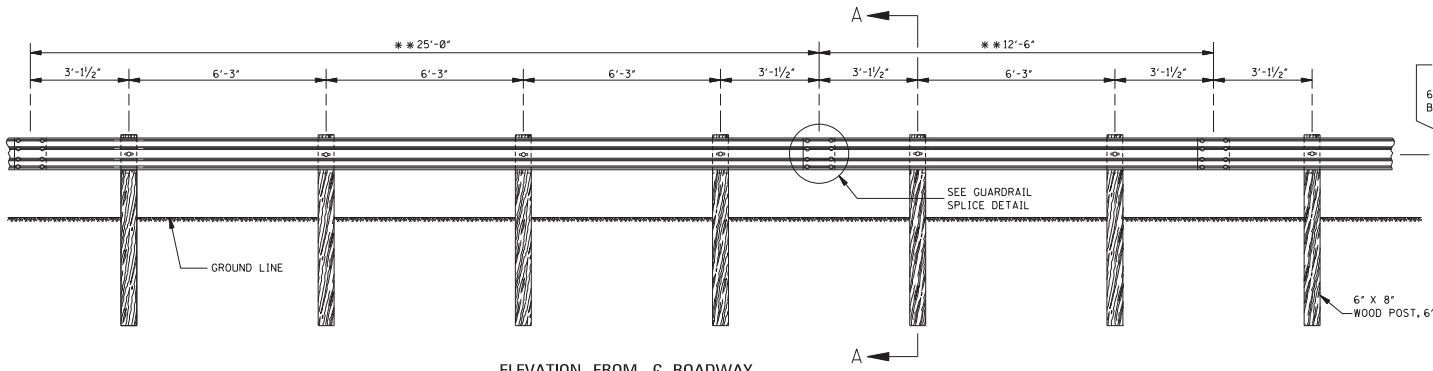

ELEVATION FROM ℄ ROADWAY

** NOTE: OPTIONAL BEAM LENGTHS.

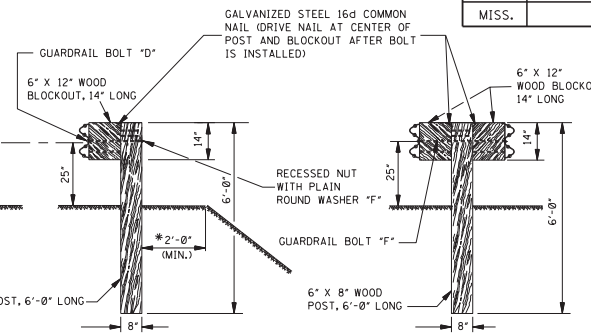

SINGLE-FACED BARRIER DOUBLE-FACED BARRIER

SECTION A–A

* NOTE: UNLESS SPECIFIED OTHERWISE ON THE PLANS.

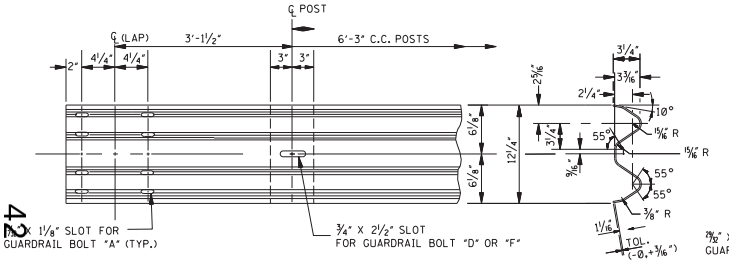

TYPICAL GUARDRAIL SECTION

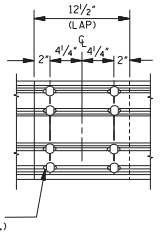

ELEVATION

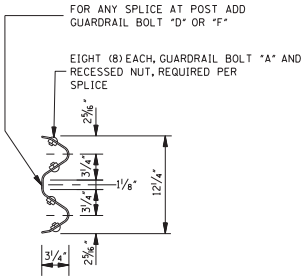

SECTION

GUARDRAIL SPLICE DETAIL

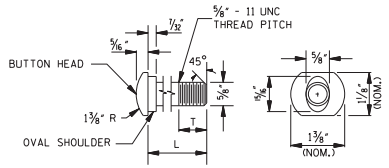

GUARDRAIL BOLT

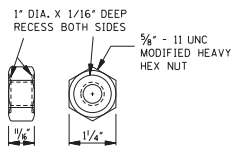

GUARDRAIL BOLTS		
BOLT	L	T (MIN.)
"A"	1¼"	1"
"D"	22"	4"
* "E"	24"	4"
"F"	33"	4"

NOTES:

1. ALL GUARDRAIL BOLTS ARE ⅝" - 11 UNC THREAD PITCH.
2. IF ANY BOLT EXTENDS MORE THAN ¼" FROM THE NUT, THE BOLT SHOULD BE TRIMMED BACK.
* 3. GUARDRAIL BOLT "E" IS USED FOR SINGLE-FACED BARRIER WITH 10" X 10" WOOD POST AND 6" X 12" WOOD BLOCKOUT.

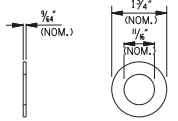

PLAIN ROUND WASHER "F"

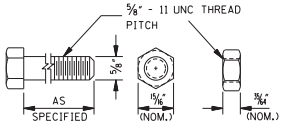

HEX NUT AND BOLT "F"

FASTENER DETAILS

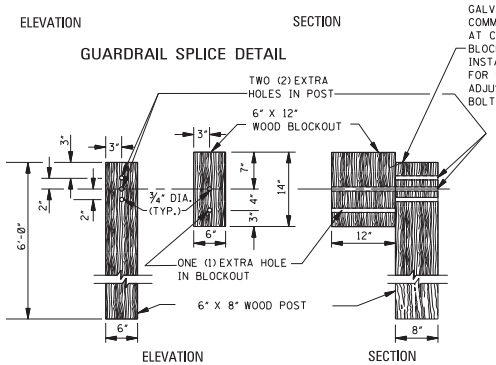

ELEVATION SECTION

DETAILS OF ADJUSTABLE HEIGHT BLOCKOUT ASSEMBLY

NOTES:

1. ON INITIAL INSTALLATION, THE BLOCKOUT SHALL BE ATTACHED TO THE BOTTOM HOLE IN THE POST, OTHER HOLES IN THE POST AND BLOCKOUT ARE FOR FUTURE 2" HEIGHT ADJUSTMENT WHEN THE ROADWAY IS RESURFACED.
2. FOR THE SECOND HEIGHT ADJUSTMENT, ONE (1) HEX NUT AND BOLT "D", 22" LONG FOR SINGLE-FACED BARRIER OR BOLT "F", 33" LONG FOR DOUBLE-FACED BARRIER, WITH TWO (2) PLAIN ROUND WASHERS "F", ONE (1) UNDER HEAD AND ONE (1) UNDER NUT, ARE REQUIRED PER POST IN ADDITION TO THE STANDARD GUARDRAIL BOLT AND RECESSED NUT.
3. HOLE DETAILS ARE REQUIRED ON ALL WOOD POSTS AND BLOCKOUTS.
4. WOOD POSTS ARE FABRICATED FROM 6" X 8" TREATED TIMBER AND BLOCKOUTS ARE FABRICATED FROM 6" X 12" TREATED TIMBER UNLESS SPECIFIED OTHERWISE ON THE PLANS.
5. ALL HOLES IN BOTH POSTS AND BLOCKOUTS ARE ¾" IN DIAMETER.

GENERAL NOTES:

1. GUARDRAIL SHALL MEET THE REQUIREMENTS OF AASHTO M 180, CLASS A, TYPE I UNLESS OTHERWISE DESIGNATED.
2. GUARDRAIL SHALL BE SINGLE FACED UNLESS OTHERWISE DESIGNATED.
3. GUARDRAIL SECTIONS SHALL BE LAPPED IN THE DIRECTION OF TRAFFIC FLOW FOR THE LANE NEAREST THE GUARDRAIL. THE ONLY EXCEPTION NOTED IS THAT GUARDRAIL SHALL BE LAPPED FOR APPROACHING TRAFFIC ON A BRIDGE WITH 2-WAY TRAFFIC.
4. ALL WOOD POSTS AND BLOCKOUTS SHALL BE TREATED TIMBER IN ACCORDANCE WITH MISSISSIPPI DEPARTMENT OF TRANSPORTATION STANDARD SPECIFICATIONS.
5. FOR OTHER DETAILS OF POSTS, POST ACCESSORIES, FASTENERS & RAIL ELEMENTS, SEE AASHTO-AGC-ARTBA JOINT TASK FORCE NO. 13, TITLED "A GUIDE TO STANDARDIZED HIGHWAY BARRIER HARDWARE," LATEST EDITION.

Notice to Bidders No. 8533-Rev. 1

DATE	REVISION	BY

MISSISSIPPI DEPARTMENT OF TRANSPORTATION
ROADWAY DESIGN DIVISION
STANDARD PLAN

GUARDRAIL: "W" BEAM (WOOD POSTS)

ISSUE DATE: AUGUST 01, 2017

MDOT
WORKING NUMBER GR-1
SHEET NUMBER 6201

STATE	PROJECT NO.
MISS.	

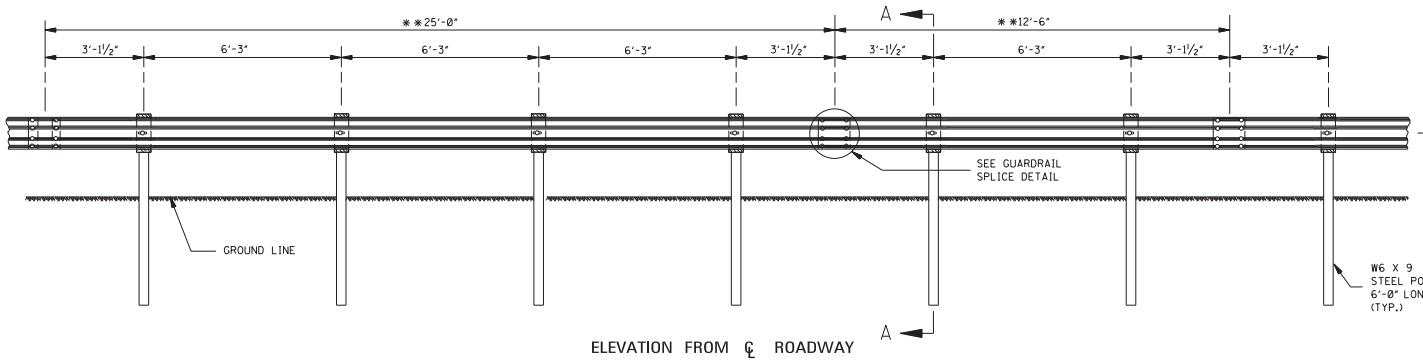

ELEVATION FROM ℄ ROADWAY

** NOTE: OPTIONAL BEAM LENGTHS.

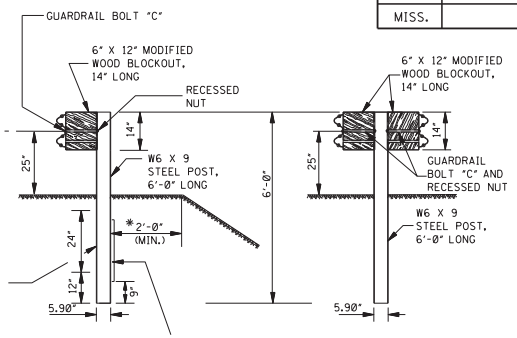

SINGLE–FACED BARRIER DOUBLE–FACED BARRIER

SECTION A–A

* NOTE: UNLESS SPECIFIED OTHERWISE ON THE PLANS.

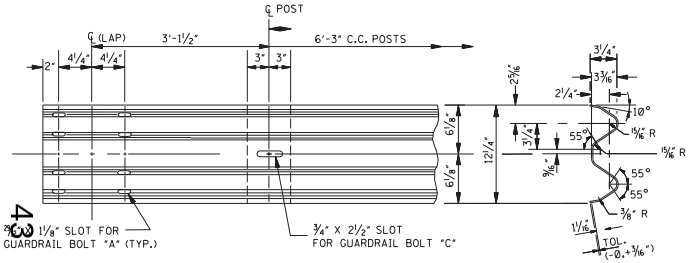

TYPICAL GUARDRAIL SECTION

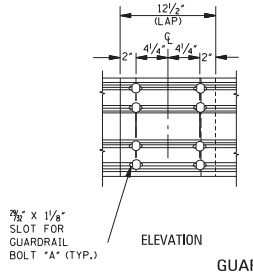

ELEVATION

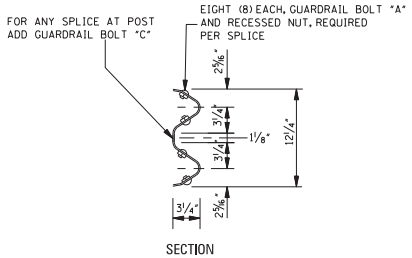

SECTION

GUARDRAIL SPLICE DETAIL

GENERAL NOTES:

1. GUARDRAIL SHALL MEET THE REQUIREMENTS OF AASHTO M 180, CLASS A, TYPE 1 UNLESS OTHERWISE DESIGNATED.
2. GUARDRAIL SHALL BE SINGLE FACED UNLESS OTHERWISE DESIGNATED.
3. GUARDRAIL SECTIONS SHALL BE LAPPED IN THE DIRECTION OF TRAFFIC FLOW FOR THE LANE NEAREST THE GUARDRAIL. THE ONLY EXCEPTION NOTED IS THAT GUARDRAIL SHALL BE LAPPED FOR **APPROACHING TRAFFIC ON A BRIDGE WITH 2-WAY TRAFFIC.**
4. STEEL POSTS SHALL CONFORM TO ASTM A36 (EXCEPT ULTRASONIC TESTING). THEY SHALL BE GALVANIZED IN ACCORDANCE WITH AASHTO M 111 EXCEPT WHEN CORROSION RESISTANT STEEL IS REQUIRED IN WHICH CASE POSTS SHALL CONFORM TO AASHTO SPECIFICATIONS FOR CORROSION RESISTANCE AND SHALL NOT BE PAINTED OR GALVANIZED. NO PUNCHING, DRILLING OR CUTTING WILL BE PERMITTED AFTER GALVANIZING EXCEPT FOR HOLES TO MOUNT GUARDRAIL DELINEATORS.
5. ALL MODIFIED WOOD BLOCKOUTS SHALL BE TREATED TIMBER IN ACCORDANCE WITH MISSISSIPPI DEPARTMENT OF TRANSPORTATION STANDARD SPECIFICATIONS.
6. FOR OTHER DETAILS OF POSTS, POST ACCESSORIES, FASTENERS & RAIL ELEMENTS, SEE AASHTO-AGC-ARTBA JOINT TASK FORCE NO. 13, TITLED "A GUIDE TO STANDARDIZED HIGHWAY BARRIER HARDWARE," LATEST EDITION.

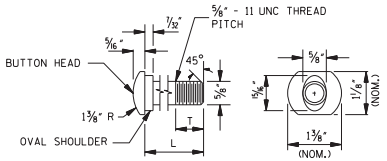

GUARDRAIL BOLT

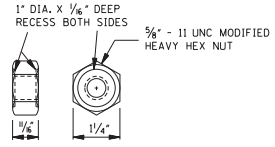

RECESSED NUT

GUARDRAIL BOLTS		
BOLT	L	T (MIN.)
"A"	1¼"	1"
"B"	12"	4"
"C"	14"	4"

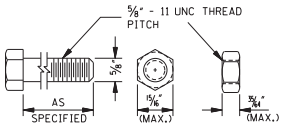

HEX NUT AND BOLT "F"

NOTES:

1. ALL GUARDRAIL BOLTS ARE ⅝" - 11 UNC THREAD PITCH.
2. IF ANY BOLT EXTENDS MORE THAN ¼" FROM THE NUT, THE BOLT SHOULD BE TRIMMED BACK.

FASTENER DETAILS

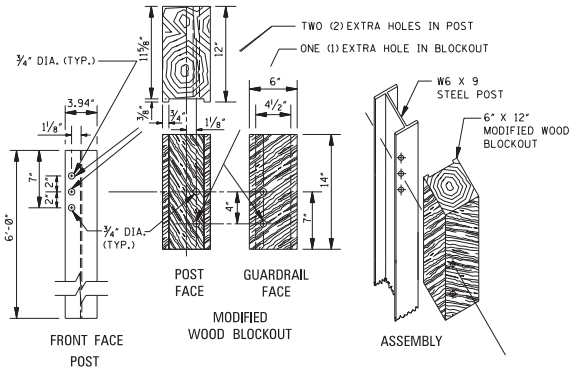

DETAILS OF ADJUSTABLE HEIGHT BLOCKOUT ASSEMBLY

NOTES:

1. ON INITIAL INSTALLATION, THE MODIFIED WOOD BLOCKOUT SHALL BE FASTENED TO THE BOTTOM HOLE IN THE STEEL POST. OTHER HOLES IN THE STEEL POST AND THE MODIFIED WOOD BLOCKOUT ARE FOR FUTURE 2" HEIGHT ADJUSTMENTS WHEN THE ROADWAY IS RESURFACED.
2. AN ADDITIONAL GUARDRAIL BOLT "C" AND RECESSED NUT IS REQUIRED FOR THE SECOND HEIGHT ADJUSTMENT.
3. HOLE DETAILS ARE REQUIRED ON ALL STEEL POSTS AND MODIFIED WOOD BLOCKOUTS.
4. STEEL POSTS ARE FABRICATED FROM W6 X 9 STRUCTURAL STEEL SHAPES.
5. MODIFIED WOOD BLOCKOUTS ARE FABRICATED FROM 6" X 12" TREATED TIMBER UNLESS SPECIFIED OTHERWISE ON THE PLANS.
6. ALL HOLES IN BOTH STEEL POSTS AND MODIFIED WOOD BLOCKOUTS ARE ¾" IN DIAMETER.

DATE	REVISION	BY

MISSISSIPPI DEPARTMENT OF TRANSPORTATION
ROADWAY DESIGN DIVISION
STANDARD PLAN

GUARDRAIL: "W" BEAM (STEEL POSTS)

ISSUE DATE: AUGUST 01, 2017

MDOT
WORKING NUMBER
GR-1B
SHEET NUMBER
6203

Notice to Bidders No. 8533-12-

STATE	PROJECT NO.
MISS.	

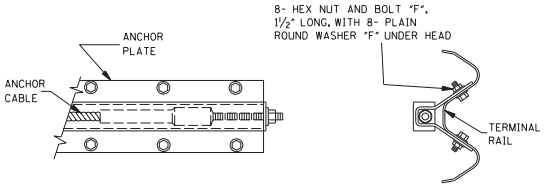

ANCHOR PLATE ASSEMBLY DETAILS

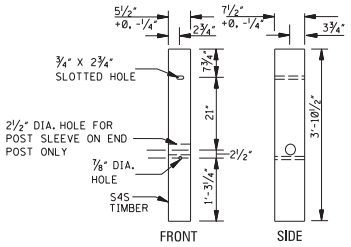

TERMINAL POST FOR FOUNDATION TUBE INSTALLATION

NOTE: TERMINAL POST SHALL BE MADE OF S4S TIMBER WITH a STRESS GRADE OF 1200 lbs/in .

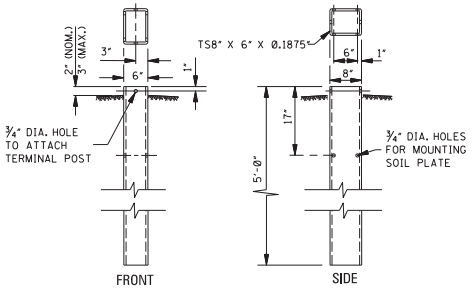

STEEL TUBE ANCHOR

NOTE: TERMINAL POST SHALL BE ABLE TO SLIDE INTO THE TOP OF THIS SECTION SO THE ACTUAL INSIDE DIMENSIONS OF THIS GALVANIZED TUBE CANNOT BE LESS THAN 7½" X 5½".

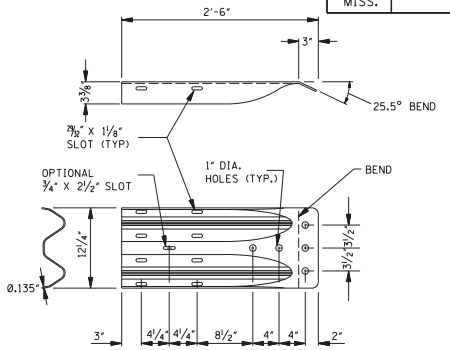

"W" BEAM TERMINAL CONNECTOR PLATE

NOTES:
1. THE "W" BEAM TERMINAL CONNECTOR SHALL BE AASHTO M 180 CORRUGATED SHEET STEEL, CLASS B, TYPE 1.
2. SPLICE-BOLT SLOTS MAY ALSO BE ORIENTED AT 50° (ON THE FLAT) INSTEAD OF 0° AS SHOWN.

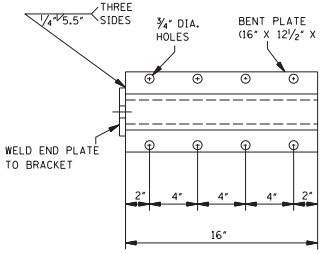

ANCHOR PLATE

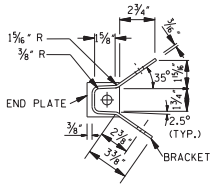

BRACKET

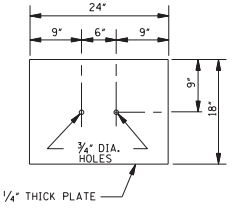

SOIL PLATE
NOTE: 2 REQUIRED

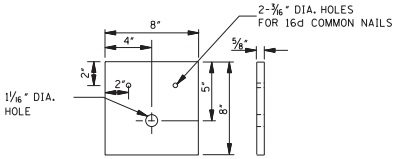

BEARING PLATE

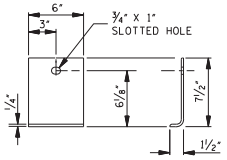

SHELF ANGLE BRACKET

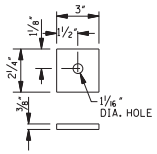

END PLATE

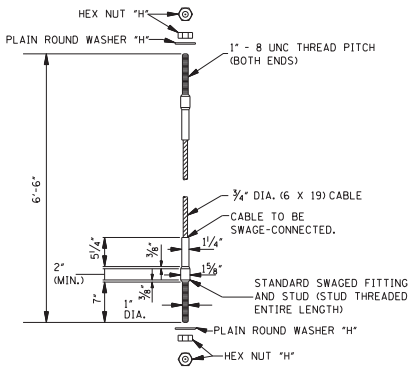

CABLE ANCHOR ASSEMBLY

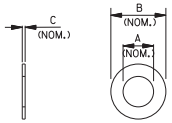

PLAIN ROUND WASHER

PLAIN ROUND WASHERS			
WASHER	A (NOM.)	B (NOM.)	C (NOM.)
"F"	11/16"	1¾"	9/64"
"H"	1 1/16"	2"	9/64"

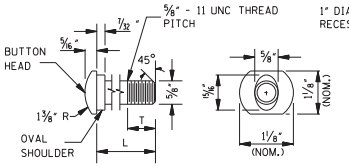

GUARDRAIL BOLT

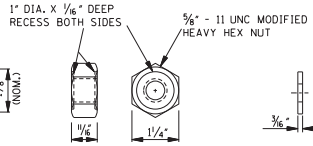

RECESSED NUT

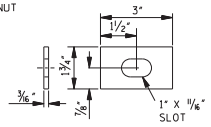

RECTANGULAR GUARDRAIL PLATE WASHER

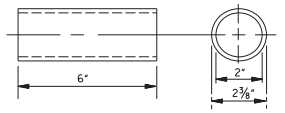

BREAKAWAY TERMINAL POST SLEEVE

GUARDRAIL BOLTS		
BOLT	L	T (MIN.)
"A"	1¼"	1"
"B"	12"	4"
"C"	14"	4"
"D"	22"	4"
"E"	24"	4"
"F"	33"	4"
	2"	1¾"
	10"	4"
	25"	4"

NOTES:
1. ALL GUARDRAIL BOLTS ARE ⅝" - 11 UNC THREAD PITCH.
2. IF ANY BOLT EXTENDS MORE THAN ¼" FROM THE NUT, THE BOLT SHOULD BE TRIMMED BACK.

FASTENER DETAILS

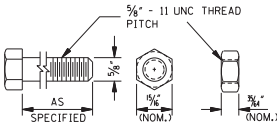

HEX NUT AND BOLT "F"

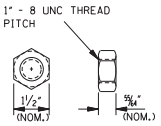

HEX NUT "H"

BY	REVISION	DATE

MISSISSIPPI DEPARTMENT OF TRANSPORTATION
ROADWAY DESIGN DIVISION
STANDARD PLAN

GUARDRAIL: MISCELLANEOUS HARDWARE

ISSUE DATE: AUGUST 01, 2017

MDOT
WORKING NUMBER
GR-HW
SHEET NUMBER
6221

Notice to Bidders Nov 8533--

STATE	PROJECT NO.
MISS.	

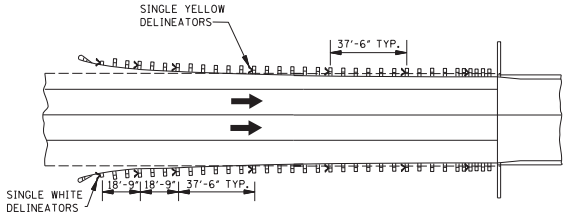

BRIDGE APPROACH INSTALLATION
(ONE–WAY TRAFFIC)

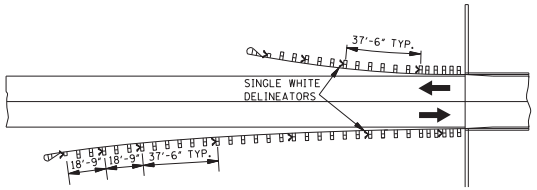

BRIDGE APPROACH INSTALLATION
(TWO–WAY TRAFFIC)

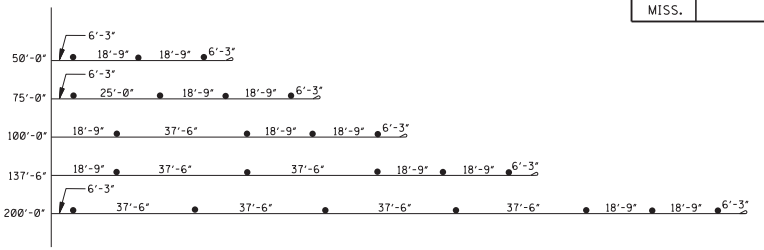

GRAPHIC SHOWING SPACINGS OF GUARDRAIL DELINEATORS
AT SOME COMMONLY USED BRIDGE APPROACHES

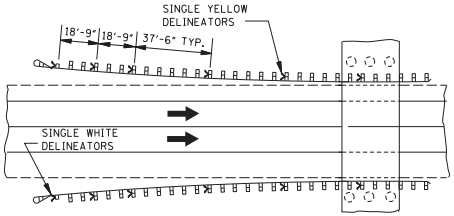

ROADSIDE OBSTACLE INSTALLATION–LENGTH 250' OR LESS
(ONE–WAY TRAFFIC)

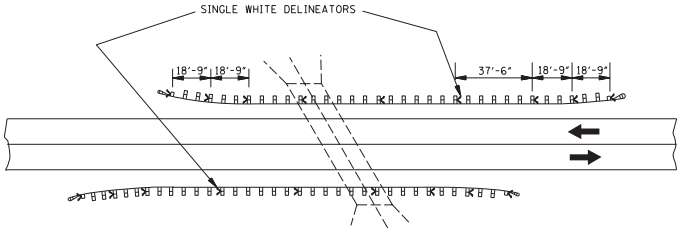

ROADSIDE OBSTACLE INSTALLATION–LENGTH 250' OR LESS
(TWO–WAY TRAFFIC)

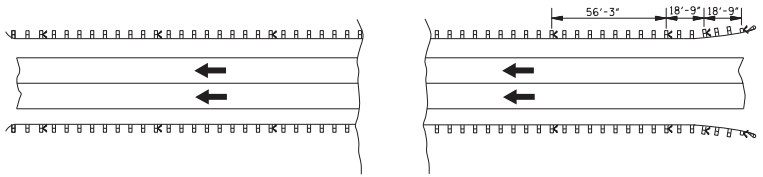

EMBANKMENT OR ROADSIDE OBSTACLE INSTALLATION–LENGTH GREATER THAN 250'
(ONE–WAY TRAFFIC)

NOTE: ONE-WAY TRAFFIC SHOWN. DELINEATOR SPACING FOR TWO-WAY TRAFFIC SIMILAR. DELINEATOR COLOR WILL BE THE SAME AS THE ADJACENT PAVEMENT EDGE MARKING. THE FIRST THREE (3) MARKERS WILL FACE TRAFFIC IN OFF LANE FOR TWO-WAY TRAFFIC AS SHOWN IN DRAWING FOR OBSTACLE INSTALLATION FOR TWO-WAY TRAFFIC.

GENERAL NOTES:

1. THE UNIT PRICE OF DELINEATOR INCLUDES: COST(S) OF DELINEATOR FACE(S), POST, HARDWARE AND INSTALLATION.

△1 2. DELINEATORS SHALL CONSIST OF RETROREFLECTIVE DEVICES THAT ARE CAPABLE OF CLEARLY RETROREFLECTING LIGHT UNDER NORMAL ATMOSPHERIC CONDITIONS FROM A DISTANCE OF 1000 FEET WHEN ILLUMINATED BY THE HIGH BEAMS OF STANDARD AUTOMOBILE LIGHTS.

△1 3. FOR THE SPACING OF DELINEATORS IN HORIZONTAL CURVES ON ROADWAYS OR BRIDGES, SEE TABLE 3G-1, MUTCD 11th EDITION, FOR SPACING REQUIREMENTS.

△1 4. DELINEATORS FOR GUARDRAIL SHALL BE MOUNTED ON FLEXIBLE POSTS AS FOLLOWS:

THE DELINEATOR POSTS WILL BE FROM MDOT'S "APPROVED PRODUCTS LIST" AND WILL BE FASTENED TO GUARDRAIL POST IN ACCORDANCE WITH THE MANUFACTURER'S RECOMMENDATION.

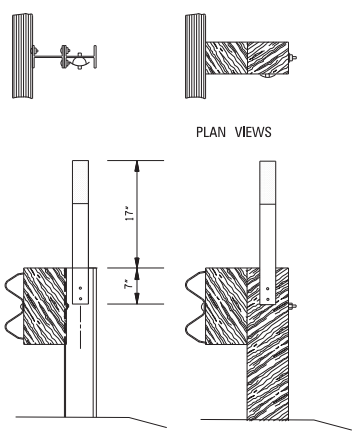

PLAN VIEWS

TYPICAL FLEXIBLE POST DELINEATOR
GUARDRAIL INSTALLATION

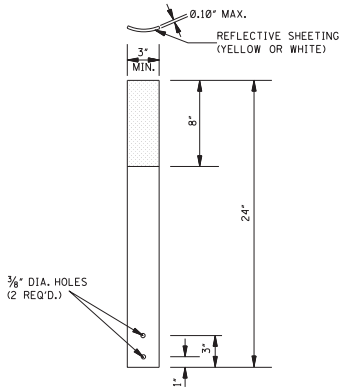

DETAIL OF FLEXIBLE
GUARDRAIL DELINEATOR

DATE	REVISION	REVISED TEXT	STN	BY
12/11/25				

MISSISSIPPI DEPARTMENT OF TRANSPORTATION
ROADWAY DESIGN DIVISION
STANDARD PLAN

TYPICAL GUARDRAIL DELINEATION

ISSUE DATE: AUGUST 01, 2017

MDOT
WORKING NUMBER
N-8C
SHEET NUMBER
6317

Notice to Bidders No. 8533--Rev. 2

STATE	PROJECT NO.
MISS.	

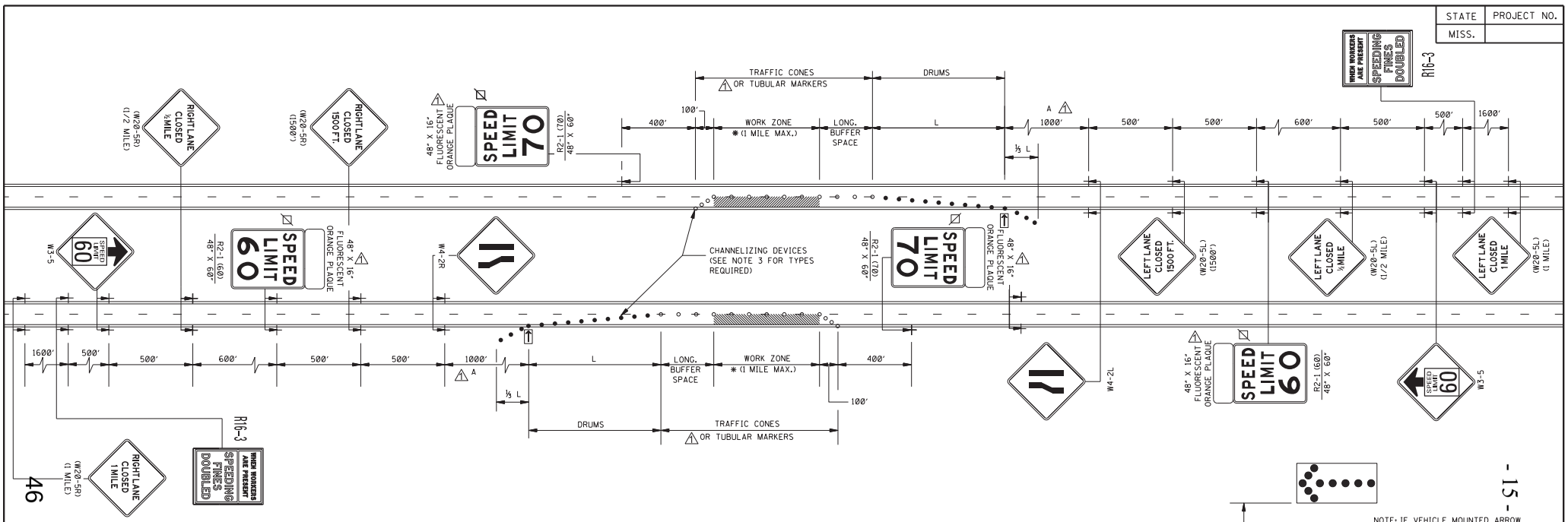

GENERAL NOTES:

1. THE LOCATION OF CHANNELIZING DEVICES AND THE WORK AREA LAYOUT SHALL BE BASED ON THE CRITERIA IN THE FOLLOWING TABLE:

POSTED SPEED AND/OR DESIGN SPEED	MAXIMUM CHANNELIZING DEVICE SPACING (ft)		†† LONGITUDINAL BUFFER SPACE (ft)	⚠ † TAPER LENGTH (ft)	
	TAPER	ALONG LANE LINE & WORK ZONE			
mph					
≤40	40	80	305	320	
45	45	90	360	540	⚠
50	50	100	425	600	⚠
55	55	110	495	660	⚠
60	60	120	570	720	⚠
65	65	130	645	780	⚠
70	70	140	730	840	⚠

⚠ † NOTE: TAPER LENGTHS ARE DETERMINED USING THE FOLLOWING EQUATIONS:
L = WS FOR SPEEDS OF 45 mph OR GREATER
L = WS²/60 FOR SPEEDS OF 40 mph OR LESS
WHERE: L = MINIMUM LENGTH OF TAPER IN FEET
W = WIDTH OF OFFSET (USUALLY LANE WIDTH) IN FEET
S = DESIGN SPEED OR 85TH PERCENTILE SPEED IN MILES PER HOUR

†† NOTE: BUFFER SPACE MAY BE ADJUSTED AS NEEDED ACCORDING TO ROADWAY GEOMETRY TO MEET SIGHT DISTANCE REQUIREMENTS, AS DIRECTED BY THE ENGINEER.

2. FLASHING ARROW PANEL SHOULD BE AS LEVEL AS POSSIBLE AS APPROVED BY THE ENGINEER. FLASHING ARROW PANEL SHOULD BE LOCATED AT THE BEGINNING OF THE TAPER OR, IF THE SHOULDER IS TOO NARROW, BEHIND THE CHANNELIZING DEVICES IN THE CLOSED LANE.

3. CHANNELIZING DEVICE TYPES FOR:
A. APPROACH TAPER- RETROREFLECTIVE PLASTIC DRUMS
⚠ B. ALONG LANE LINE AND WORK ZONE- TRAFFIC CONES OR TUBULAR MARKERS (28" HEIGHT MINIMUM)
⚠ C. EXIT TAPER- TRAFFIC CONES OR TUBULAR MARKERS (28" HEIGHT MINIMUM)

4. WHEN WORK ZONE IS NO LONGER NEEDED, ALL SIGNS SHALL BE COVERED OR REMOVED AND THE DRUMS SHALL BE MOVED TO THE SHOULDER EDGE AT THE END OF THE WORK DAY.

5. FOR MOVING OPERATIONS (PAVING) THE CONTRACTOR SHALL HAVE TWO (2) SETS OF ADVANCE WARNING AND REGULATORY SIGNS, PLASTIC DRUMS, AND ARROW BOARD. WHEN THE CONSTRUCTION ZONE IS MOVED AHEAD, ALL SIGNS, PLASTIC DRUMS AND ARROW BOARD SHALL BE IN PLACE ON THE SECOND ZONE BEFORE REMOVING ANY SIGNS, PLASTIC DRUMS OR ARROW BOARD ON THE FIRST ZONE.

⚠ 6. ALL WARNING SIGNS (W SERIES) SIGNS SHOULD BE A MINIMUM OF 48" X 48". AND SHALL BE BLACK COPY ON FLUORESCENT ORANGE SHEETING.

7. ALL EXISTING SPEED LIMIT SIGNS WHICH ARE INFLUENCED BY OR CONFLICT WITH THE SPEED ZONE REDUCTION SHALL BE COVERED AS DIRECTED BY THE ENGINEER WHILE THE REDUCED SPEED LIMIT IS IN EFFECT. TAPE SHALL NOT BE USED ON THE FACE OF SIGN.

8. ADDITIONAL REDUCED REGULATORY SPEED LIMIT SIGNS ARE REQUIRED AT EACH ENTRANCE RAMP WITHIN THE SPEED ZONE. TWO (2) WILL BE REQUIRED FOR EACH RAMP AND LOCATION WILL BE DETERMINED BY THE ENGINEER.

9. THIS TRAFFIC CONTROL PLAN, WITH SPEED ZONE, MAY NOT BE USED ON ANY FACILITY WHERE THE POSTED SPEED LIMIT IS BELOW 65 MPH WITHOUT A COMMISSION ORDER REQUESTING A SPEED LIMIT REDUCTION.

10. LAYOUT SHOWN ABOVE IS FOR AN INTERSTATE WITH A POSTED SPEED LIMIT OF 70 MPH. FOR POSTED SPEED LIMIT OF 65 MPH, THE REDUCED SPEED LIMIT WILL BE 55 MPH.

⚠ 11. A FLUORESCENT ORANGE PLAQUE IS REQUIRED WITH ALL REGULATORY SPEED LIMIT SIGNS AND "REDUCED SPEED AHEAD" SIGNS REQUIRED FOR LANE CLOSURE.

12. ALL TRAFFIC CONTROL ITEMS SHOWN ON THIS SHEET WILL NOT BE MEASURED FOR SEPARATE PAYMENT. THIS WORK SHALL BE INCLUDED IN THE PRICE BID FOR MAINTENANCE OF TRAFFIC.

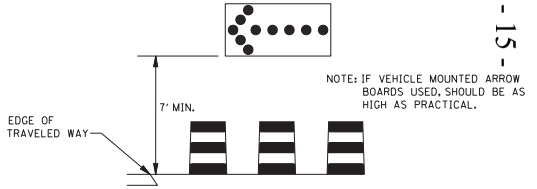

LEGEND

* OR AS SHOWN ELSEWHERE ON THE PLANS.
FLASHING ARROW PANEL (TYPE "C")
BLACK LEGEND AND BORDER ON WHITE BACKGROUND
● RETROREFLECTIVE FREE-STANDING PLASTIC DRUMS
○ TRAFFIC CONES (28" HEIGHT)

DATE	REVISION	STN	BY
12/17/25	REVISED TEXT.		

MISSISSIPPI DEPARTMENT OF TRANSPORTATION
ROADWAY DESIGN DIVISION
STANDARD PLAN

TRAFFIC CONTROL PLAN FOR POSTED SPEED LIMIT OF 65 OR 70 MPH

(INTERSTATES AND OTHER 4-LANE DIVIDED HIGHWAYS) (MEDIAN LANE OR OUTSIDE LANE CLOSURE) (WORK DAY ONLY)

ISSUE DATE: AUGUST 01, 2017

MDOT
TRACKING NUMBER
TCP-5
SHEET NUMBER
6355

Notice to Bidders No. 8533--Rev.

STATE	PROJECT NO.
MISS.	

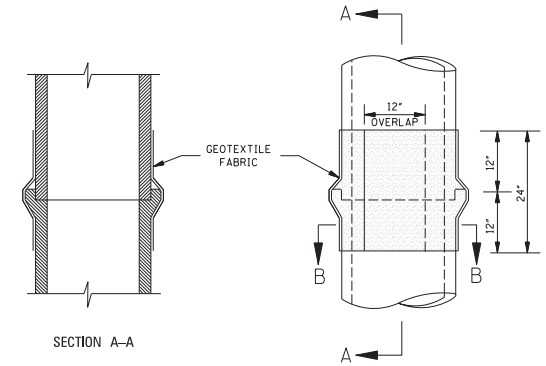

STACKED PIPE JOINTS

NOTE: EACH STACKED PIPE JOINT SHALL BE TREATED FIRST WITH A BITUMINOUS PLASTIC SEALER MATERIAL AND SECONDLY WRAPPED WITH 24" WIDE TYPE V GEOTEXTILE FABRIC (AASHTO M 288). THE FABRIC SHALL OVERLAP A MINIMUM OF 12" AT THE WRAP AND SHALL BE SECURED WITH STRING OR WIRE AS APPROVED BY THE ENGINEER PRIOR TO BACKFILLING. THE COST SHALL BE ABSORBED IN OTHER ITEMS BID.

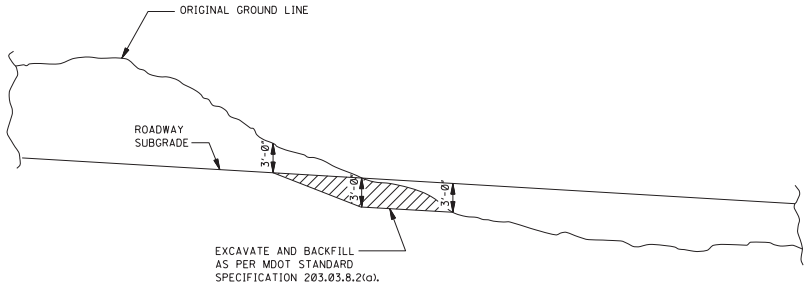

PROFILE SHOWING REQUIRED EXCAVATION AT GRADE POINTS

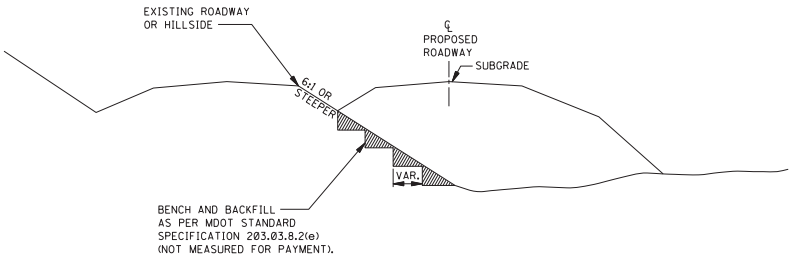

CROSS–SECTION SHOWING REQUIRED BENCHING
UNDER EMBANKMENTS ON STEEP SLOPES

EXCAVATION AT GRADE POINTS

BY	REVISION	DATE

MISSISSIPPI DEPARTMENT OF TRANSPORTATION
ROADWAY DESIGN DIVISION
STANDARD PLAN

MISCELLANEOUS DETAIL SHEET

1. STACKED PIPE JOINTS
2. EXCAVATION AT GRADE POINTS

ISSUE DATE: AUGUST 01, 2017

MDOT
WORKING NUMBER
MDS-1
SHEET NUMBER
6425

MISSISSIPPI DEPARTMENT OF TRANSPORTATION

SECTION 904 - NOTICE TO BIDDERS NO. 8534 **CODE: (SP)**

DATE: **11/5/2026**

SUBJECT: **Project Number Change**

PROJECT: **ER-0240-00(021) / 110299301, ER-0008-02(137) / 110300302, ER-0008-02(139) / 110377301, & ER-0008-02(138) / 110378301 – Covington County**

Bidders are hereby advised that any references to Project Number ER-0008-02(137) / 110300301 in the plans or specifications shall be understood to mean Project Number ER-0008-02(137) / 110300302.

General Decision Number: MS20260124 05/18/2026

State: Mississippi

Construction Types: Highway

Counties: Mississippi Counties of
Claiborne, Covington, Franklin,
Issaquena, Sharkey, Walthall and
Wilkinson

Modification Number	Publication Date
0	01/02/2026
1	05/18/2026

SUMS2010-047 08/04/2014

	Rates	Fringes
TRUCK DRIVER: SEMI/TRAILER TRUCK	$ 17.34	0.00
TRUCK DRIVER: DUMP TRUCK (ALL TYPES)	$ 11.64	0.00
TRUCK DRIVER: WATER TRUCK	$ 13.15	0.00
TRUCK DRIVER: OFF THE ROAD TRUCK	$ 12.31	0.00
TRUCK DRIVER: MECHANIC	$ 12.35	0.00
TRUCK DRIVER: LOWBOY TRUCK	$ 12.49	0.00
TRUCK DRIVER: FLATBED TRUCK	$ 13.29	0.00
OPERATOR: TRENCHER	$ 15.00	0.00
OPERATOR: TRACTOR	$ 9.98	0.00
OPERATOR: SCRAPER	$ 12.63	0.00
OPERATOR: ROLLER (ALL TYPES)	$ 11.05	0.00
OPERATOR: PILEDRIVER	$ 15.13	0.00
OPERATOR: PAVER (ASPHALT, AGGREGATE, AND CONCRETE)	$ 13.01	0.00
OPERATOR: OILER	$ 13.08	0.48
OPERATOR: MIXER	$ 14.85	0.00
OPERATOR: MILLING MACHINE	$ 15.38	0.00
OPERATOR: MECHANIC	$ 16.28	0.00
OPERATOR: LOADER	$ 11.73	0.00
OPERATOR: GRADER/BLADE	$ 13.84	0.00
OPERATOR: DRILL	$ 19.22	0.00
OPERATOR: DISTRIBUTOR	$ 11.70	0.00
OPERATOR: CRANE	$ 16.00	0.00
OPERATOR: CONCRETE SAW	$ 13.60	0.00
OPERATOR: BULLDOZER	$ 13.30	0.00
OPERATOR: BROOM/SWEEPER	$ 10.17	0.00
OPERATOR: BACKHOE/EXCAVATOR/TRACKHOE	$ 13.28	0.00
OPERATOR: ASPHALT SPREADER	$ 16.13	0.00
LABORER: LABORER-CONES/ BARRICADES/BARRELS - SETTER/MOVER/SWEEPER	$ 10.53	0.00
LABORER: PIPELAYER	$ 13.13	0.00
LABORER: MASON TENDER - CEMENT/CONCRETE	$ 11.69	0.00

LABORER: LANDSCAPE.....$ 9.82 0.00
LABORER: GRADE CHECKER.....$ 10.67 0.00
LABORER: FLAGGER.....$ 9.83 0.00
LABORER: COMMON OR GENERAL, INCLUDING CONCRETE WORK.....$ 10.24 0.00
LABORER: ASPHALT, INCLUDES RAKER, SHOVELER, SPREADER AND DISTRIBUTOR.....$ 10.26 0.00
IRONWORKER, REINFORCING.....$ 16.43 0.00
INSTALLER - SIGN.....$ 12.04 0.00
INSTALLER - GUARDRAIL.....$ 11.42 0.00
HIGHWAY/PARKING LOT STRIPING: TRUCK DRIVER (LINE STRIPING TRUCK).....$ 12.63 0.00
ELECTRICIAN.....$ 22.64 7.73
CEMENT MASON/CONCRETE FINISHER.....$ 13.23 0.00
CARPENTER, EXCLUDES FORM WORK.....$ 14.21 0.00
CARPENTER (FORM WORK ONLY).....$ 12.26 0.12

WELDERS - Receive rate prescribed for craft performing operation to which welding is incidental.

Note: Executive Order (EO) 13706, Establishing Paid Sick Leave for Federal Contractors applies to all contracts subject to the Davis-Bacon Act for which the contract is awarded (and any solicitation was issued) on or after January 1, 2017. If this contract is covered by the EO, the contractor must provide employees with 1 hour of paid sick leave for every 30 hours they work, up to 56 hours of paid sick leave each year. Employees must be permitted to use paid sick leave for their own illness, injury or other health-related needs, including preventive care; to assist a family member (or person who is like family to the employee) who is ill, injured, or has other health-related needs, including preventive care; or for reasons resulting from, or to assist a family member (or person who is like family to the employee) who is a victim of, domestic violence, sexual assault, or stalking. Additional information on contractor requirements and worker protections under the EO is available at https://www.dol.gov/agencies/whd/government-contracts.

Note: Executive Order 13658 generally applies to contracts subject to the Davis-Bacon Act that were awarded on or between January 1, 2015 and January 29, 2022, and that have not been renewed or extended on or after January 30, 2022. Executive Order 13658 does not apply to contracts subject only to the Davis-Bacon Related Acts regardless of when they were awarded. If a contract is subject to Executive Order 13658, the contractor must pay all covered workers at least $13.65 per hour (or the applicable wage rate listed on this wage determination, if it is higher) for all hours spent performing on the contract from May 11, 2026, through December 31, 2026. The applicable Executive Order minimum wage rate will be adjusted annually. Additional information on contractor requirements and worker protections under Executive Order 13658 is available at www.dol.gov/whd/govcontracts.

Unlisted classifications needed for work not included within the scope of the classifications listed may be added after

award only as provided in the labor standards contract clauses (29CFR 5.5 (a) (1) (iii)).

The body of each wage determination lists the classifications and wage rates that have been found to be prevailing for the type(s) of construction and geographic area covered by the wage determination. The classifications are listed in alphabetical order under rate identifiers indicating whether the particular rate is a union rate (current union negotiated rate), a survey rate, a weighted union average rate, a state adopted rate, or a supplemental classification rate.

Union Rate Identifiers

A four-letter identifier beginning with characters other than **SU**, **UAVG**, **SA**, or **SC** denotes that a union rate was prevailing for that classification in the survey. Example: PLUM0198-005 07/01/2024. PLUM is an identifier of the union whose collectively bargained rate prevailed in the survey for this classification, which in this example would be Plumbers. 0198 indicates the local union number or district council number where applicable, i.e., Plumbers Local 0198. The next number, 005 in the example, is an internal number used in processing the wage determination. The date, 07/01/2024 in the example, is the effective date of the most current negotiated rate.

Union prevailing wage rates are updated to reflect all changes over time that are reported to WHD in the rates in the collective bargaining agreement (CBA) governing the classification.

Union Average Rate Identifiers

The UAVG identifier indicates that no single rate prevailed for those classifications, but that 100% of the data reported for the classifications reflected union rates. EXAMPLE: UAVG-OH-0010 01/01/2024. UAVG indicates that the rate is a weighted union average rate. OH indicates the State of Ohio. The next number, 0010 in the example, is an internal number used in producing the wage determination. The date, 01/01/2024 in the example, indicates the date the wage determination was updated to reflect the most current union average rate.

A UAVG rate will be updated once a year, usually in January, to reflect a weighted average of the current rates in the collective bargaining agreements on which the rate is based.

Survey Rate Identifiers

The **SU** identifier indicates that either a single non-union rate prevailed (as defined in 29 CFR 1.2) for this classification in the survey or that the rate was derived by computing a weighted average rate based on all the rates reported in the survey for that classification. As a weighted average rate includes all rates reported in the survey, it may include both union and non-union rates. Example: SUFL2022-007 6/27/2024. SU indicates the rate is a single non-union

prevailing rate or a weighted average of survey data for that classification. FL indicates the State of Florida. 2022 is the year of the survey on which these classifications and rates are based. The next number, 007 in the example, is an internal number used in producing the wage determination. The date, 6/27/2024 in the example, indicates the survey completion date for the classifications and rates under that identifier.

•SU• wage rates typically remain in effect until a new survey is conducted. However, the Wage and Hour Division (WHD) has the discretion to update such rates under 29 CFR 1.6(c)(1).

State Adopted Rate Identifiers

The •SA• identifier indicates that the classifications and prevailing wage rates set by a state (or local) government were adopted under 29 C.F.R 1.3(g)-(h). Example: SAME2023-007 01/03/2024. SA reflects that the rates are state adopted. ME refers to the State of Maine. 2023 is the year during which the state completed the survey on which the listed classifications and rates are based. The next number, 007 in the example, is an internal number used in producing the wage determination. The date, 01/03/2024 in the example, reflects the date on which the classifications and rates under the •SA• identifier took effect under state law in the state from which the rates were adopted.

WAGE DETERMINATION APPEALS PROCESS

1) Has there been an initial decision in the matter? This can be:

a) a survey underlying a wage determination
b) an existing published wage determination
c) an initial WHD letter setting forth a position on a wage determination matter
d) an initial conformance (additional classification and rate) determination

On survey related matters, initial contact, including requests for summaries of surveys, should be directed to the WHD Branch of Wage Surveys. Requests can be submitted via email to davisbaconinfo@dol.gov or by mail to:

Branch of Wage Surveys
Wage and Hour Division
U.S. Department of Labor
200 Constitution Avenue, N.W.
Washington, DC 20210

Regarding any other wage determination matter such as conformance decisions, requests for initial decisions should be directed to the WHD Branch of Construction Wage Determinations. Requests can be submitted via email to BCWD-Office@dol.gov or by mail to:

Branch of Construction Wage Determinations
Wage and Hour Division
U.S. Department of Labor
200 Constitution Avenue, N.W.
Washington, DC 20210

2) If an initial decision has been issued, then any interested party (those affected by the action) that disagrees with the decision can request review and reconsideration from the Wage

and Hour Administrator (See 29 CFR Part 1.8 and 29 CFR Part 7). Requests for review and reconsideration can be submitted via email to dba.reconsideration@dol.gov or by mail to:

Wage and Hour Administrator
U.S. Department of Labor
200 Constitution Avenue, N.W.
Washington, DC 20210

The request should be accompanied by a full statement of the interested party's position and any information (wage payment data, project description, area practice material, etc.) that the requestor considers relevant to the issue.

3) If the decision of the Administrator is not favorable, an interested party may appeal directly to the Administrative Review Board (formerly the Wage Appeals Board). Write to:

Administrative Review Board
U.S. Department of Labor
200 Constitution Avenue, N.W.
Washington, DC 20210.

==========

END OF GENERAL DECISION

SUPPLEMENT TO FORM FHWA-1273

DATE: 07/25/2026

SUBJECT: Federal Contract Provisions for Subcontracts

Federal Contract Provisions for Subcontracts

All subcontracts shall be in writing and contain all pertinent provisions and requirements of the prime contract.

Each "Request for Permission to Subcontract" (Mississippi Department of Transportation Form CAD-720) shall include a copy of the subcontract. The federal contract provisions (FHWA-1273, SUPPLEMENT TO FORM FHWA-1273, NOTICE OF NON-DISCRIMINATION AND DAVIS-BACON AND RELATED ACT PROVISIONS (WAGE RATES)) must be physically incorporated as part of the subcontract. A completed Mississippi Department of Transportation Form CAD-725 must be attached to the CAD-720.

CONTRACT PROVISIONS FOR
FEDERAL-AID CONSTRUCTION CONTRACTS

I. General
II. Nondiscrimination
III. Davis-Bacon and Related Act Provisions
IV. Contract Work Hours and Safety Standards Act Provisions
V. Subletting or Assigning the Contract
VI. Safety: Accident Prevention
VII. False Statements Concerning Highway Projects
VIII. Implementation of Clean Air Act and Federal Water Pollution Control Act
IX. Certification Regarding Debarment, Suspension, Ineligibility and Voluntary Exclusion
X. Certification Regarding Use of Contract Funds for Lobbying
XI. Use of United States-Flag Vessels

ATTACHMENTS

A. Employment and Materials Preference for Appalachian Development Highway System or Appalachian Local Access Road Contracts (included in Appalachian contracts only).

I. GENERAL

1. Historically, contracting agencies using Federal-aid highway funds were required to ensure Form FHWA-1273 was physically incorporated into all contracts and subcontracts. Effective June 10, 2026, this requirement was eliminated [91 FR 25492]. Future use of Form FHWA-1273 is now optional on the part of the contracting agency using Federal-aid highway funds. FHWA continues to make Form FHWA-1273 available as a convenience to contracting agencies. Contracting agencies must continue to ensure compliance with the provisions cited in Form FHWA-1273 in accordance with the provisions regardless of the use of Form FHWA-1273. Accordingly, the contracting agency retains the authority to determine whether the contractor must use Form FHWA-1273 to physically incorporate required contract provisions in each subcontract and in lower tier contracts. Where permitted by the contracting agency, the contractor may choose other ways to include required contract provisions in each subcontract, besides incorporating Form FHWA-1273. Contract provisions in Form FHWA-1273 are not required to be physically included in subcontracts for design services on Federal-aid design-build contracts, or in purchase orders, rental agreements and other agreements for supplies or services.

The applicable provisions of Form FHWA-1273 are incorporated by reference for work done under any purchase order, rental agreement or agreement for other services. The prime contractor or design-builder shall be responsible for compliance by any subcontractor, lower-tier subcontractor or service provider.

Contracting agencies may reference Form FHWA-1273 in solicitation-for-bids or request-for-proposals documents.

2. Subject to the applicability criteria noted in the following sections, these contract provisions shall apply to all work performed on the contract by the contractor's own organization and with the assistance of workers under the contractor's immediate superintendence and to all work performed on the contract by piecework, station work, or by subcontract.

3. A breach of any of the stipulations contained in these Required Contract Provisions may be sufficient grounds for withholding of progress payments, withholding of final payment, termination of the contract, suspension / debarment or any other action determined to be appropriate by the contracting agency and FHWA.

4. Selection of Labor: During the performance of this contract, the contractor shall not use convict labor for any purpose within the limits of a construction project on a Federal-aid highway unless it is labor performed by convicts who are on parole, supervised release, or probation. 23 U.S.C. 114(b). The term Federal-aid highway does not include roadways functionally classified as local roads or rural minor collectors. 23 U.S.C. 101(a).

II. NONDISCRIMINATION

The contractor and all subcontractors must comply with the following policies: 29 CFR Parts 1625-1627, 23 U.S.C. 140, Section 504 of the Rehabilitation Act of 1973, as amended (29 U.S.C. 794), Title VI of the Civil Rights Act of 1964, as amended (42 U.S.C. 2000d et seq.), and related regulations including 49 CFR Parts 21, 26, and 27, including any amendments thereto.

Note: The U.S. Department of Labor has exclusive authority to determine compliance with 29 CFR Parts 1625-1627. The contracting agency and the FHWA have the authority and the responsibility to ensure compliance with 23 U.S.C. 140, Section 504 of the Rehabilitation Act of 1973, as amended (29 U.S.C. 794), and Title VI of the Civil Rights Act of 1964, as amended (42 U.S.C. 2000d et seq.), and related regulations including 49 CFR Parts 21, 26, and 27, including any amendments thereto.

The provisions of the Americans with Disabilities Act of 1990 (42 U.S.C. 12101 et seq.) set forth under 28 CFR Part 35 and 29 CFR Part 1630 are incorporated by reference in this contract.

1. Assurances Required:

a. The requirements of 49 CFR Part 26, including any amendments thereto, and the State DOT's FHWA-approved Disadvantaged Business Enterprise (DBE) program are incorporated by reference.

b. The contractor, subrecipient or subcontractor shall not discriminate on the basis of race, color, national origin, or sex in the performance of this contract. The contractor shall carry out applicable requirements of 49 CFR part 26, including any amendments thereto, in the award and administration of DOT-assisted contracts. Failure by the contractor to carry out these requirements is a material breach of this contract, which may result in the termination of this contract or such other remedy as the recipient deems appropriate, which may include, but is not limited to:

(1) Withholding monthly progress payments;
(2) Assessing sanctions;
(3) Liquidated damages; and/or
(4) Disqualifying the contractor from future bidding as non-responsible.

c. The Title VI and nondiscrimination provisions of U.S. DOT Order 1050.2A at Appendixes A and E, including any amendments thereto, are incorporated by reference. 49 CFR Part 21.

III. DAVIS-BACON AND RELATED ACT PROVISIONS

This section is applicable to all Federal-aid construction projects exceeding $2,000 and to all related subcontracts and lower-tier subcontracts (regardless of subcontract size), in accordance with 29 CFR 5.5. The requirements apply to all projects located within the right-of-way of a roadway that is functionally classified as Federal-aid highway. 23 U.S.C. 113. This excludes roadways functionally classified as local roads or rural minor collectors, which are exempt. 23 U.S.C. 101. Where applicable law requires that projects be treated as a project on a Federal-aid highway, the provisions of this subpart will apply regardless of the location of the project. Examples include: Surface Transportation Block Grant Program projects funded under 23 U.S.C. 133 [excluding recreational trails projects], the Nationally Significant Freight and Highway Projects funded under 23 U.S.C. 117, and National Highway Freight Program projects funded under 23 U.S.C. 167.

The following provisions are from the U.S. Department of Labor regulations in 29 CFR 5.5 “Contract provisions and related matters” with minor revisions to conform to the FHWA-1273 format and FHWA program requirements.

1. Minimum wages (29 CFR 5.5)

a. *Wage rates and fringe benefits.* All laborers and mechanics employed or working upon the site of the work (or otherwise working in construction or development of the project under a development statute), will be paid unconditionally and not less often than once a week, and without subsequent deduction or rebate on any account (except such payroll deductions as are permitted by regulations issued by the Secretary of Labor under the Copeland Act (29 CFR part 3)), the full amount of basic hourly wages and bona fide fringe benefits (or cash equivalents thereof) due at time of payment computed at rates not less than those contained in the wage determination of the Secretary of Labor which is attached hereto and made a part hereof, regardless of any contractual relationship which may be alleged to exist between the contractor and such laborers and mechanics. As provided in paragraphs (d) and (e) of 29 CFR 5.5, the appropriate wage determinations are effective by operation of law even if they have not been attached to the contract. Contributions made or costs reasonably anticipated for bona fide fringe benefits under the Davis-Bacon Act (40 U.S.C. 3141(2)(B)) on behalf of laborers or mechanics are considered wages paid to such laborers or mechanics, subject to the provisions of paragraph 1.e. of this section; also, regular contributions made or costs incurred for more than a weekly period (but not less often than quarterly) under plans, funds, or programs which cover the particular weekly period, are deemed to be constructively made or incurred during such weekly period. Such laborers and mechanics must be paid the appropriate wage rate and fringe benefits on the wage determination for the classification(s) of work actually performed, without regard to skill, except as provided in paragraph 4. of this section. Laborers or mechanics performing work in more than one classification may be compensated at the rate specified for each classification for the time actually worked therein: *Provided,* That the employer's payroll records accurately set forth the time spent in each classification in which work is performed. The wage determination (including any additional classifications and wage rates conformed under paragraph 1.c. of this section) and the Davis-Bacon poster (WH–1321) must be posted at all times by the contractor and its subcontractors at the site of the work in a prominent and accessible place where it can be easily seen by the workers.

b. *Frequently recurring classifications.* (1) In addition to wage and fringe benefit rates that have been determined to be prevailing under the procedures set forth in 29 CFR part 1, a wage determination may contain, pursuant to § 1.3(f), wage and fringe benefit rates for classifications of laborers and mechanics for which conformance requests are regularly submitted pursuant to paragraph 1.c. of this section, provided that:

(i) The work performed by the classification is not performed by a classification in the wage determination for which a prevailing wage rate has been determined;

(ii) The classification is used in the area by the construction industry; and

(iii) The wage rate for the classification bears a reasonable relationship to the prevailing wage rates contained in the wage determination.

(2) The Administrator will establish wage rates for such classifications in accordance with paragraph 1.c.(1)(iii) of this section. Work performed in such a classification must be paid at no less than the wage and fringe benefit rate listed on the wage determination for such classification.

c. *Conformance.* (1) The contracting officer must require that any class of laborers or mechanics, including helpers, which is not listed in the wage determination and which is to be employed under the contract be classified in conformance with the wage determination. Conformance of an additional classification and wage rate and fringe benefits is appropriate only when the following criteria have been met:

(i) The work to be performed by the classification requested is not performed by a classification in the wage determination; and

(ii) The classification is used in the area by the construction industry; and

(iii) The proposed wage rate, including any bona fide fringe benefits, bears a reasonable relationship to the wage rates contained in the wage determination.

(2) The conformance process may not be used to split, subdivide, or otherwise avoid application of classifications listed in the wage determination.

(3) If the contractor and the laborers and mechanics to be employed in the classification (if known), or their representatives, and the contracting officer agree on the

classification and wage rate (including the amount designated for fringe benefits where appropriate), a report of the action taken will be sent by the contracting officer by email to *DBAconformance@dol.gov*. The Administrator, or an authorized representative, will approve, modify, or disapprove every additional classification action within 30 days of receipt and so advise the contracting officer or will notify the contracting officer within the 30–day period that additional time is necessary.

(4) In the event the contractor, the laborers or mechanics to be employed in the classification or their representatives, and the contracting officer do not agree on the proposed classification and wage rate (including the amount designated for fringe benefits, where appropriate), the contracting officer will, by email to *DBAconformance@dol.gov*, refer the questions, including the views of all interested parties and the recommendation of the contracting officer, to the Administrator for determination. The Administrator, or an authorized representative, will issue a determination within 30 days of receipt and so advise the contracting officer or will notify the contracting officer within the 30–day period that additional time is necessary.

(5) The contracting officer must promptly notify the contractor of the action taken by the Wage and Hour Division under paragraphs 1.c.(3) and (4) of this section. The contractor must furnish a written copy of such determination to each affected worker or it must be posted as a part of the wage determination. The wage rate (including fringe benefits where appropriate) determined pursuant to paragraph 1.c.(3) or (4) of this section must be paid to all workers performing work in the classification under this contract from the first day on which work is performed in the classification.

d. *Fringe benefits not expressed as an hourly rate.* Whenever the minimum wage rate prescribed in the contract for a class of laborers or mechanics includes a fringe benefit which is not expressed as an hourly rate, the contractor may either pay the benefit as stated in the wage determination or may pay another bona fide fringe benefit or an hourly cash equivalent thereof.

e. *Unfunded plans.* If the contractor does not make payments to a trustee or other third person, the contractor may consider as part of the wages of any laborer or mechanic the amount of any costs reasonably anticipated in providing bona fide fringe benefits under a plan or program, *Provided,* That the Secretary of Labor has found, upon the written request of the contractor, in accordance with the criteria set forth in § 5.28, that the applicable standards of the Davis-Bacon Act have been met. The Secretary of Labor may require the contractor to set aside in a separate account assets for the meeting of obligations under the plan or program.

f. *Interest.* In the event of a failure to pay all or part of the wages required by the contract, the contractor will be required to pay interest on any underpayment of wages.

2. Withholding (29 CFR 5.5)

a. *Withholding requirements.* The contracting agency may, upon its own action, or must, upon written request of an authorized representative of the Department of Labor, withhold or cause to be withheld from the contractor so much of the accrued payments or advances as may be considered necessary to satisfy the liabilities of the prime contractor or any subcontractor for the full amount of wages and monetary relief, including interest, required by the clauses set forth in this section for violations of this contract, or to satisfy any such liabilities required by any other Federal contract, or federally assisted contract subject to Davis-Bacon labor standards, that is held by the same prime contractor (as defined in § 5.2). The necessary funds may be withheld from the contractor under this contract, any other Federal contract with the same prime contractor, or any other federally assisted contract that is subject to Davis-Bacon labor standards requirements and is held by the same prime contractor, regardless of whether the other contract was awarded or assisted by the same agency, and such funds may be used to satisfy the contractor liability for which the funds were withheld. In the event of a contractor's failure to pay any laborer or mechanic, including any apprentice or helper working on the site of the work all or part of the wages required by the contract, or upon the contractor's failure to submit the required records as discussed in paragraph 3.d. of this section, the contracting agency may on its own initiative and after written notice to the contractor, take such action as may be necessary to cause the suspension of any further payment, advance, or guarantee of funds until such violations have ceased.

b. *Priority to withheld funds.* The Department has priority to funds withheld or to be withheld in accordance with paragraph 2.a. of this section or Section IV, paragraph 3.a., or both, over claims to those funds by:

(1) A contractor's surety(ies), including without limitation performance bond sureties and payment bond sureties;

(2) A contracting agency for its reprocurement costs;

(3) A trustee(s) (either a court-appointed trustee or a U.S. trustee, or both) in bankruptcy of a contractor, or a contractor's bankruptcy estate;

(4) A contractor's assignee(s);

(5) A contractor's successor(s); or

(6) A claim asserted under the Prompt Payment Act, 31 U.S.C. 3901–3907.

3. Records and certified payrolls (29 CFR 5.5)

a. *Basic record requirements* (1) *Length of record retention.* All regular payrolls and other basic records must be maintained by the contractor and any subcontractor during the course of the work and preserved for all laborers and mechanics working at the site of the work (or otherwise working in construction or development of the project under a development statute) for a period of at least 3 years after all the work on the prime contract is completed.

(2) *Information required.* Such records must contain the name; Social Security number; last known address, telephone number, and email address of each such worker; each worker's correct classification(s) of work actually performed; hourly rates of wages paid (including rates of contributions or costs anticipated for bona fide fringe benefits or cash equivalents thereof of the types described in 40 U.S.C. 3141(2)(B) of the Davis-Bacon Act); daily and weekly number

of hours actually worked in total and on each covered contract; deductions made; and actual wages paid.

(3) *Additional records relating to fringe benefits.* Whenever the Secretary of Labor has found under paragraph 1.e. of this section that the wages of any laborer or mechanic include the amount of any costs reasonably anticipated in providing benefits under a plan or program described in 40 U.S.C. 3141(2)(B) of the Davis-Bacon Act, the contractor must maintain records which show that the commitment to provide such benefits is enforceable, that the plan or program is financially responsible, and that the plan or program has been communicated in writing to the laborers or mechanics affected, and records which show the costs anticipated or the actual cost incurred in providing such benefits.

(4) *Additional records relating to apprenticeship.* Contractors with apprentices working under approved programs must maintain written evidence of the registration of apprenticeship programs, the registration of the apprentices, and the ratios and wage rates prescribed in the applicable programs.

b. *Certified payroll requirements* (1) *Frequency and method of submission.* The contractor or subcontractor must submit weekly, for each week in which any DBA- or Related Acts-covered work is performed, certified payrolls to the contracting agency. The prime contractor is responsible for the submission of all certified payrolls by all subcontractors. A contracting agency or prime contractor may permit or require contractors to submit certified payrolls through an electronic system, as long as the electronic system requires a legally valid electronic signature; the system allows the contractor, the contracting agency, and the Department of Labor to access the certified payrolls upon request for at least 3 years after the work on the prime contract has been completed; and the contracting agency or prime contractor permits other methods of submission in situations where the contractor is unable or limited in its ability to use or access the electronic system.

(2) *Information required.* The certified payrolls submitted must set out accurately and completely all of the information required to be maintained under paragraph 3.a.(2) of this section, except that full Social Security numbers and last known addresses, telephone numbers, and email addresses must not be included on weekly transmittals. Instead, the certified payrolls need only include an individually identifying number for each worker (*e.g.,* the last four digits of the worker's Social Security number). The required weekly certified payroll information may be submitted using Optional Form WH–347 or in any other format desired. Optional Form WH–347 is available for this purpose from the Wage and Hour Division website at *https://www.dol.gov/sites/dolgov/files/WHD/legacy/files/wh347/.pdf* or its successor website. It is not a violation of this section for a prime contractor to require a subcontractor to provide full Social Security numbers and last known addresses, telephone numbers, and email addresses to the prime contractor for its own records, without weekly submission by the subcontractor to the contracting agency.

(3) *Statement of Compliance.* Each certified payroll submitted must be accompanied by a "Statement of Compliance," signed by the contractor or subcontractor, or the contractor's or subcontractor's agent who pays or supervises the payment of the persons working on the contract, and must certify the following:

(i) That the certified payroll for the payroll period contains the information required to be provided under paragraph 3.b. of this section, the appropriate information and basic records are being maintained under paragraph 3.a. of this section, and such information and records are correct and complete;

(ii) That each laborer or mechanic (including each helper and apprentice) working on the contract during the payroll period has been paid the full weekly wages earned, without rebate, either directly or indirectly, and that no deductions have been made either directly or indirectly from the full wages earned, other than permissible deductions as set forth in 29 CFR part 3; and

(iii) That each laborer or mechanic has been paid not less than the applicable wage rates and fringe benefits or cash equivalents for the classification(s) of work actually performed, as specified in the applicable wage determination incorporated into the contract.

(4) *Use of Optional Form WH–347.* The weekly submission of a properly executed certification set forth on the reverse side of Optional Form WH–347 will satisfy the requirement for submission of the "Statement of Compliance" required by paragraph 3.b.(3) of this section.

(5) *Signature.* The signature by the contractor, subcontractor, or the contractor's or subcontractor's agent must be an original handwritten signature or a legally valid electronic signature.

(6) *Falsification.* The falsification of any of the above certifications may subject the contractor or subcontractor to civil or criminal prosecution under 18 U.S.C. 1001 and 31 U.S.C. 3729.

(7) *Length of certified payroll retention.* The contractor or subcontractor must preserve all certified payrolls during the course of the work and for a period of 3 years after all the work on the prime contract is completed.

c. *Contracts, subcontracts, and related documents.* The contractor or subcontractor must maintain this contract or subcontract and related documents including, without limitation, bids, proposals, amendments, modifications, and extensions. The contractor or subcontractor must preserve these contracts, subcontracts, and related documents during the course of the work and for a period of 3 years after all the work on the prime contract is completed.

d. *Required disclosures and access* (1) *Required record disclosures and access to workers.* The contractor or subcontractor must make the records required under paragraphs 3.a. through 3.c. of this section, and any other documents that the contracting agency, the State DOT, the FHWA, or the Department of Labor deems necessary to determine compliance with the labor standards provisions of any of the applicable statutes referenced by § 5.1, available for inspection, copying, or transcription by authorized representatives of the contracting agency, the State DOT, the FHWA, or the Department of Labor, and must permit such representatives to interview workers during working hours on the job.

(2) *Sanctions for non-compliance with records and worker access requirements.* If the contractor or subcontractor fails to submit the required records or to make them available, or refuses to permit worker interviews during working hours on the job, the Federal agency may, after written notice to the contractor, sponsor, applicant, owner, or other entity, as the case may be, that maintains such records or that employs such workers, take such action as may be necessary to cause the suspension of any further payment, advance, or guarantee of funds. Furthermore, failure to submit the required records upon request or to make such records available, or to permit worker interviews during working hours on the job, may be grounds for debarment action pursuant to § 5.12. In addition, any contractor or other person that fails to submit the required records or make those records available to WHD within the time WHD requests that the records be produced will be precluded from introducing as evidence in an administrative proceeding under 29 CFR part 6 any of the required records that were not provided or made available to WHD. WHD will take into consideration a reasonable request from the contractor or person for an extension of the time for submission of records. WHD will determine the reasonableness of the request and may consider, among other things, the location of the records and the volume of production.

(3) *Required information disclosures.* Contractors and subcontractors must maintain the full Social Security number and last known address, telephone number, and email address of each covered worker, and must provide them upon request to the contracting agency, the State DOT, the FHWA, the contractor, or the Wage and Hour Division of the Department of Labor for purposes of an investigation or other compliance action.

4. Apprentices and equal employment opportunity (29 CFR 5.5)

a. *Apprentices* (1) *Rate of pay.* Apprentices will be permitted to work at less than the predetermined rate for the work they perform when they are employed pursuant to and individually registered in a bona fide apprenticeship program registered with the U.S. Department of Labor, Employment and Training Administration, Office of Apprenticeship (OA), or with a State Apprenticeship Agency recognized by the OA. A person who is not individually registered in the program, but who has been certified by the OA or a State Apprenticeship Agency (where appropriate) to be eligible for probationary employment as an apprentice, will be permitted to work at less than the predetermined rate for the work they perform in the first 90 days of probationary employment as an apprentice in such a program. In the event the OA or a State Apprenticeship Agency recognized by the OA withdraws approval of an apprenticeship program, the contractor will no longer be permitted to use apprentices at less than the applicable predetermined rate for the work performed until an acceptable program is approved.

(2) *Fringe benefits.* Apprentices must be paid fringe benefits in accordance with the provisions of the apprenticeship program. If the apprenticeship program does not specify fringe benefits, apprentices must be paid the full amount of fringe benefits listed on the wage determination for the applicable classification. If the Administrator determines that a different practice prevails for the applicable apprentice classification, fringe benefits must be paid in accordance with that determination.

(3) *Apprenticeship ratio.* The allowable ratio of apprentices to journeyworkers on the job site in any craft classification must not be greater than the ratio permitted to the contractor as to the entire work force under the registered program or the ratio applicable to the locality of the project pursuant to paragraph 4.a.(4) of this section. Any worker listed on a payroll at an apprentice wage rate, who is not registered or otherwise employed as stated in paragraph 4.a.(1) of this section, must be paid not less than the applicable wage rate on the wage determination for the classification of work actually performed. In addition, any apprentice performing work on the job site in excess of the ratio permitted under this section must be paid not less than the applicable wage rate on the wage determination for the work actually performed.

(4) *Reciprocity of ratios and wage rates.* Where a contractor is performing construction on a project in a locality other than the locality in which its program is registered, the ratios and wage rates (expressed in percentages of the journeyworker's hourly rate) applicable within the locality in which the construction is being performed must be observed. If there is no applicable ratio or wage rate for the locality of the project, the ratio and wage rate specified in the contractor's registered program must be observed.

b. *Equal employment opportunity.* The use of apprentices and journeyworkers under this part must be in conformity with 29 CFR part 30, including any amendments thereto.

c. Apprentices and Trainees (programs of the U.S. DOT).

Apprentices and trainees working under apprenticeship and skill training programs which have been certified by the Secretary of Transportation as promoting EEO in connection with Federal-aid highway construction programs are not subject to the requirements of paragraph 4 of this Section III. 23 CFR 230.111(e)(2). The straight time hourly wage rates for apprentices and trainees under such programs will be established by the particular programs. The ratio of apprentices and trainees to journeyworkers shall not be greater than permitted by the terms of the particular program.

5. Compliance with Copeland Act requirements. The contractor shall comply with the requirements of 29 CFR part 3, which are incorporated by reference in this contract as provided in 29 CFR 5.5.

6. Subcontracts. The contractor or subcontractor must insert in any subcontracts the clauses set forth in paragraphs (1) through (11) of this section, along with the applicable wage determination(s) and such other clauses or contract modifications as the contracting agency may by appropriate instructions require, and a clause requiring the subcontractors to include these clauses and wage determination(s) in any lower tier subcontracts. The prime contractor is responsible for the compliance by any subcontractor or lower tier subcontractor with all the contract clauses in this section. In the event of any violations of these clauses, the prime contractor and any subcontractor(s) responsible will be liable for any unpaid wages and monetary relief, including interest from the date of the underpayment or loss, due to any workers of lower-tier subcontractors, and may be subject to debarment, as appropriate. 29 CFR 5.5.

7. Contract termination: debarment. A breach of the contract clauses in 29 CFR 5.5 may be grounds for termination of the

contract, and for debarment as a contractor and a subcontractor as provided in 29 CFR 5.12.

8. Compliance with Davis-Bacon and Related Act requirements. All rulings and interpretations of the Davis-Bacon and Related Acts contained in 29 CFR parts 1, 3, and 5 are herein incorporated by reference in this contract as provided in 29 CFR 5.5.

9. Disputes concerning labor standards. As provided in 29 CFR 5.5, disputes arising out of the labor standards provisions of this contract shall not be subject to the general disputes clause of this contract. Such disputes shall be resolved in accordance with the procedures of the Department of Labor set forth in 29 CFR parts 5, 6, and 7. Disputes within the meaning of this clause include disputes between the contractor (or any of its subcontractors) and the contracting agency, the U.S. Department of Labor, or the employees or their representatives.

10. Certification of eligibility. a. By entering into this contract, the contractor certifies that neither it nor any person or firm who has an interest in the contractor's firm is a person or firm ineligible to be awarded Government contracts by virtue of 40 U.S.C. 3144(b) or § 5.12(a).

b. No part of this contract shall be subcontracted to any person or firm ineligible for award of a Government contract by virtue of 40 U.S.C. 3144(b) or § 5.12(a).

c. The penalty for making false statements is prescribed in the U.S. Code, Title 18 Crimes and Criminal Procedure, 18 U.S.C. 1001.

11. Anti-retaliation. It is unlawful for any person to discharge, demote, intimidate, threaten, restrain, coerce, blacklist, harass, or in any other manner discriminate against, or to cause any person to discharge, demote, intimidate, threaten, restrain, coerce, blacklist, harass, or in any other manner discriminate against, any worker or job applicant for:

a. Notifying any contractor of any conduct which the worker reasonably believes constitutes a violation of the DBA, Related Acts, this part, or 29 CFR part 1 or 3;

b. Filing any complaint, initiating or causing to be initiated any proceeding, or otherwise asserting or seeking to assert on behalf of themselves or others any right or protection under the DBA, Related Acts, this part, or 29 CFR part 1 or 3;

c. Cooperating in any investigation or other compliance action, or testifying in any proceeding under the DBA, Related Acts, this part, or 29 CFR part 1 or 3; or

d. Informing any other person about their rights under the DBA, Related Acts, this part, or 29 CFR part 1 or 3.

IV. CONTRACT WORK HOURS AND SAFETY STANDARDS ACT

Pursuant to 29 CFR 5.5(b), the following clauses apply to any Federal-aid construction contract in an amount in excess of $100,000 and subject to the overtime provisions of the Contract Work Hours and Safety Standards Act. These clauses shall be inserted in addition to the clauses required by 29 CFR 5.5(a) or 29 CFR 4.6. As used in this paragraph, the terms laborers and mechanics include watchpersons and guards.

1. Overtime requirements. No contractor or subcontractor contracting for any part of the contract work which may require or involve the employment of laborers or mechanics shall require or permit any such laborer or mechanic in any workweek in which he or she is employed on such work to work in excess of forty hours in such workweek unless such laborer or mechanic receives compensation at a rate not less than one and one-half times the basic rate of pay for all hours worked in excess of forty hours in such workweek. 29 CFR 5.5.

2. Violation; liability for unpaid wages; liquidated damages. In the event of any violation of the clause set forth in paragraph 1. of this section the contractor and any subcontractor responsible therefor shall be liable for the unpaid wages and interest from the date of the underpayment. In addition, such contractor and subcontractor shall be liable to the United States (in the case of work done under contract for the District of Columbia or a territory, to such District or to such territory), for liquidated damages. Such liquidated damages shall be computed with respect to each individual laborer or mechanic, including watchpersons and guards, employed in violation of the clause set forth in paragraph 1. of this section, in the sum currently provided in 29 CFR 5.5(b)(2)* for each calendar day on which such individual was required or permitted to work in excess of the standard workweek of forty hours without payment of the overtime wages required by the clause set forth in paragraph 1. of this section.

* $33 as of January 15, 2025 (See 90 FR 1859) as may be adjusted annually by the Department of Labor, pursuant to the Federal Civil Penalties Inflation Adjustment Act of 1990.

3. Withholding for unpaid wages and liquidated damages

a. *Withholding process.* The FHWA or the contracting agency may, upon its own action, or must, upon written request of an authorized representative of the Department of Labor, withhold or cause to be withheld from the contractor so much of the accrued payments or advances as may be considered necessary to satisfy the liabilities of the prime contractor or any subcontractor for any unpaid wages; monetary relief, including interest; and liquidated damages required by the clauses set forth in this section on this contract, any other Federal contract with the same prime contractor, or any other federally assisted contract subject to the Contract Work Hours and Safety Standards Act that is held by the same prime contractor (as defined in § 5.2). The necessary funds may be withheld from the contractor under this contract, any other Federal contract with the same prime contractor, or any other federally assisted contract that is subject to the Contract Work Hours and Safety Standards Act and is held by the same prime contractor, regardless of whether the other contract was awarded or assisted by the same agency, and such funds may be used to satisfy the contractor liability for which the funds were withheld.

b. *Priority to withheld funds.* The Department has priority to funds withheld or to be withheld in accordance with Section III paragraph 2.a. or paragraph 3.a. of this section, or both, over claims to those funds by:

(1) A contractor's surety(ies), including without limitation performance bond sureties and payment bond sureties;

(2) A contracting agency for its reprocurement costs;

(3) A trustee(s) (either a court-appointed trustee or a U.S. trustee, or both) in bankruptcy of a contractor, or a contractor's bankruptcy estate;

(4) A contractor's assignee(s);

(5) A contractor's successor(s); or

(6) A claim asserted under the Prompt Payment Act, 31 U.S.C. 3901–3907.

4. Subcontracts. The contractor or subcontractor must insert in any subcontracts the clauses set forth in paragraphs 1. through 5. of this section and a clause requiring the subcontractors to include these clauses in any lower tier subcontracts. The prime contractor is responsible for compliance by any subcontractor or lower tier subcontractor with the clauses set forth in paragraphs 1. through 5. In the event of any violations of these clauses, the prime contractor and any subcontractor(s) responsible will be liable for any unpaid wages and monetary relief, including interest from the date of the underpayment or loss, due to any workers of lower-tier subcontractors, and associated liquidated damages and may be subject to debarment, as appropriate.

5. Anti-retaliation. It is unlawful for any person to discharge, demote, intimidate, threaten, restrain, coerce, blacklist, harass, or in any other manner discriminate against, or to cause any person to discharge, demote, intimidate, threaten, restrain, coerce, blacklist, harass, or in any other manner discriminate against, any worker or job applicant for:

a. Notifying any contractor of any conduct which the worker reasonably believes constitutes a violation of the Contract Work Hours and Safety Standards Act (CWHSSA) or its implementing regulations in this part;

b. Filing any complaint, initiating or causing to be initiated any proceeding, or otherwise asserting or seeking to assert on behalf of themselves or others any right or protection under CWHSSA or this part;

c. Cooperating in any investigation or other compliance action, or testifying in any proceeding under CWHSSA or this part; or

d. Informing any other person about their rights under CWHSSA or this part.

V. SUBLETTING OR ASSIGNING THE CONTRACT

This provision is applicable to all Federal-aid construction contracts on the National Highway System pursuant to 23 CFR 635.116.

1. The contractor shall perform with its own organization contract work amounting to not less than 30 percent (or a greater percentage if specified elsewhere in the contract) of the total original contract price, excluding any specialty items designated by the contracting agency. Specialty items may be performed by subcontract and the amount of any such specialty items performed may be deducted from the total original contract price before computing the amount of work required to be performed by the contractor's own organization (23 CFR 635.116).

a. The term “perform work with its own organization” in paragraph 1. of this section refers to workers employed or leased by the prime contractor, and equipment owned or rented by the prime contractor, with or without operators. Such term does not include employees or equipment of a subcontractor or lower tier subcontractor, agents of the prime contractor, or any other assignees. The term may include payments for the costs of hiring leased employees from an employee leasing firm meeting all relevant Federal and State regulatory requirements. Leased employees may only be included in this term if the prime contractor meets all of the following conditions: (based on longstanding interpretation)

(1) the prime contractor maintains control over the supervision of the day-to-day activities of the leased employees;
(2) the prime contractor remains responsible for the quality of the work of the leased employees;
(3) the prime contractor retains all power to accept or exclude individual employees from work on the project; and
(4) the prime contractor remains ultimately responsible for the payment of predetermined minimum wages, the submission of payrolls, statements of compliance and all other Federal regulatory requirements.

b. "Specialty Items" shall be construed to be limited to work that requires highly specialized knowledge, abilities, or equipment not ordinarily available in the type of contracting organizations qualified and expected to bid or propose on the contract as a whole and in general are to be limited to minor components of the overall contract. 23 CFR 635.102.

2. Pursuant to 23 CFR 635.116(a), the contract amount upon which the requirements set forth in paragraph 1. of this section is computed includes the cost of material and manufactured products which are to be purchased or produced by the contractor under the contract provisions.

3. Pursuant to 23 CFR 635.116(c), the contractor shall furnish (a) a competent superintendent or supervisor who is employed by the firm, has full authority to direct performance of the work in accordance with the contract requirements, and is in charge of all construction operations (regardless of who performs the work) and (b) such other of its own organizational resources (supervision, management, and engineering services) as the contracting officer determines is necessary to assure the performance of the contract.

4. No portion of the contract shall be sublet, assigned or otherwise disposed of except with the written consent of the contracting officer, or authorized representative, and such consent when given shall not be construed to relieve the contractor of any responsibility for the fulfillment of the contract. Written consent will be given only after the contracting agency has assured that each subcontract is evidenced in writing and that it contains all pertinent provisions and requirements of the prime contract. (based on long-standing interpretation of 23 CFR 635.116).

5. The 30-percent self-performance requirement of paragraph (1) is not applicable to design-build contracts; however,

contracting agencies may establish their own self-performance requirements. 23 CFR 635.116(d).

VI. SAFETY: ACCIDENT PREVENTION

This provision is applicable to all Federal-aid construction contracts and to all related subcontracts.

1. In the performance of this contract the contractor shall comply with all applicable Federal, State, and local laws governing safety, health, and sanitation (23 CFR Part 635). The contractor shall provide all safeguards, safety devices and protective equipment and take any other needed actions as it determines, or as the contracting officer may determine, to be reasonably necessary to protect the life and health of employees on the job and the safety of the public and to protect property in connection with the performance of the work covered by the contract. 23 CFR 635.108.

2. It is a condition of this contract, and shall be made a condition of each subcontract, which the contractor enters into pursuant to this contract, that the contractor and any subcontractor shall not permit any employee, in performance of the contract, to work in surroundings or under conditions which are unsanitary, hazardous or dangerous to his/her health or safety, as determined under construction safety and health standards (29 CFR Part 1926) promulgated by the Secretary of Labor, in accordance with Section 107 of the Contract Work Hours and Safety Standards Act (40 U.S.C. 3704). 29 CFR 1926.10.

3. Pursuant to 29 CFR 1926.3, it is a condition of this contract that the Secretary of Labor or authorized representative thereof, shall have right of entry to any site of contract performance to inspect or investigate the matter of compliance with the construction safety and health standards and to carry out the duties of the Secretary under Section 107 of the Contract Work Hours and Safety Standards Act (40 U.S.C. 3704).

VII. FALSE STATEMENTS CONCERNING HIGHWAY PROJECTS

This provision is applicable to all Federal-aid construction contracts and to all related subcontracts.

In order to assure high quality and durable construction in conformity with approved plans and specifications and a high degree of reliability on statements and representations made by engineers, contractors, suppliers, and workers on Federal-aid highway projects, it is essential that all persons concerned with the project perform their functions as carefully, thoroughly, and honestly as possible. Willful falsification, distortion, or misrepresentation with respect to any facts related to the project is a violation of Federal law. To prevent any misunderstanding regarding the seriousness of these and similar acts, Form FHWA-1022 shall be posted on each Federal-aid highway project (23 CFR Part 635) in one or more places where it is readily available to all persons concerned with the project:

18 U.S.C. 1020 reads as follows:

"Whoever, being an officer, agent, or employee of the United States, or of any State or Territory, or whoever, whether a person, association, firm, or corporation, knowingly makes any false statement, false representation, or false report as to the character, quality, quantity, or cost of the material used or to be used, or the quantity or quality of the work performed or to be performed, or the cost thereof in connection with the submission of plans, maps, specifications, contracts, or costs of construction on any highway or related project submitted for approval to the Secretary of Transportation; or

Whoever knowingly makes any false statement, false representation, false report or false claim with respect to the character, quality, quantity, or cost of any work performed or to be performed, or materials furnished or to be furnished, in connection with the construction of any highway or related project approved by the Secretary of Transportation; or

Whoever knowingly makes any false statement or false representation as to material fact in any statement, certificate, or report submitted pursuant to provisions of the Federal-aid Roads Act approved July 11, 1916, (39 Stat. 355), as amended and supplemented;

Shall be fined under this title or imprisoned not more than 5 years or both."

VIII. IMPLEMENTATION OF CLEAN AIR ACT AND FEDERAL WATER POLLUTION CONTROL ACT (42 U.S.C. 7606; 2 CFR 200.88; EO 11738)

This provision is applicable to all Federal-aid construction contracts in excess of $150,000 and to all related subcontracts. 48 CFR 2.101; 2 CFR 200.327.

By submission of this bid/proposal or the execution of this contract or subcontract, as appropriate, the bidder, proposer, Federal-aid construction contractor, subcontractor, supplier, or vendor agrees to comply with all applicable standards, orders or regulations issued pursuant to the Clean Air Act (42 U.S.C. 7401-7671q) and the Federal Water Pollution Control Act, as amended (33 U.S.C. 1251-1387). Violations must be reported to the Federal Highway Administration and the Regional Office of the Environmental Protection Agency. 2 CFR Part 200, Appendix II.

The contractor agrees to include or cause to be included the requirements of this Section in every subcontract, and further agrees to take such action as the contracting agency may direct as a means of enforcing such requirements. 2 CFR 200.327.

IX. CERTIFICATION REGARDING DEBARMENT, SUSPENSION, INELIGIBILITY AND VOLUNTARY EXCLUSION

This provision is applicable to all Federal-aid construction contracts, design-build contracts, subcontracts, lower-tier subcontracts, purchase orders, lease agreements, consultant contracts or any other covered transaction requiring FHWA approval or that is estimated to cost $25,000 or more – as defined in 2 CFR Parts 180 and 1200. 2 CFR 180.220 and 1200.220.

1**. Instructions for Certification – First Tier Participants:**

a. By signing and submitting this proposal, the prospective first tier participant is providing the certification set out below.

b. The inability of a person to provide the certification set out below will not necessarily result in denial of participation in this

covered transaction. The prospective first tier participant shall submit an explanation of why it cannot provide the certification set out below. The certification or explanation will be considered in connection with the department or agency's determination whether to enter into this transaction. However, failure of the prospective first tier participant to furnish a certification or an explanation shall disqualify such a person from participation in this transaction. 2 CFR 180.320.

c. The certification in this clause is a material representation of fact upon which reliance was placed when the contracting agency determined to enter into this transaction. If it is later determined that the prospective participant knowingly rendered an erroneous certification, in addition to other remedies available to the Federal Government, the contracting agency may terminate this transaction for cause of default. 2 CFR 180.325.

d. The prospective first tier participant shall provide immediate written notice to the contracting agency to whom this proposal is submitted if any time the prospective first tier participant learns that its certification was erroneous when submitted or has become erroneous by reason of changed circumstances. 2 CFR 180.345 and 180.350.

e. The terms "covered transaction," "debarred," "suspended," "ineligible," "participant," "person," "principal," and "voluntarily excluded," as used in this clause, are defined in 2 CFR Parts 180, Subpart I, 180.900-180.1020, and 1200. “First Tier Covered Transactions” refers to any covered transaction between a recipient or subrecipient of Federal funds and a participant (such as the prime or general contract). “Lower Tier Covered Transactions” refers to any covered transaction under a First Tier Covered Transaction (such as subcontracts). “First Tier Participant” refers to the participant who has entered into a covered transaction with a recipient or subrecipient of Federal funds (such as the prime or general contractor). “Lower Tier Participant” refers any participant who has entered into a covered transaction with a First Tier Participant or other Lower Tier Participants (such as subcontractors and suppliers).

f. The prospective first tier participant agrees by submitting this proposal that, should the proposed covered transaction be entered into, it shall not knowingly enter into any lower tier covered transaction with a person who is debarred, suspended, declared ineligible, or voluntarily excluded from participation in this covered transaction, unless authorized by the department or agency entering into this transaction. 2 CFR 180.330.

g. The prospective first tier participant further agrees by submitting this proposal that it will include the clause titled "Certification Regarding Debarment, Suspension, Ineligibility and Voluntary Exclusion-Lower Tier Covered Transactions," provided by the department or contracting agency, entering into this covered transaction, without modification, in all lower tier covered transactions and in all solicitations for lower tier covered transactions exceeding the $25,000 threshold. 2 CFR 180.220 and 180.300.

h. A participant in a covered transaction may rely upon a certification of a prospective participant in a lower tier covered transaction that is not debarred, suspended, ineligible, or voluntarily excluded from the covered transaction, unless it knows that the certification is erroneous. 2 CFR 180.300; 180.320, and 180.325. A participant is responsible for ensuring that its principals are not suspended, debarred, or otherwise ineligible to participate in covered transactions. 2 CFR 180.335. To verify the eligibility of its principals, as well as the eligibility of any lower tier prospective participants, each participant may, but is not required to, check the System for Award Management website (https://www.sam.gov/). 2 CFR 180.300, 180.320, and 180.325.

i. Nothing contained in the foregoing shall be construed to require the establishment of a system of records in order to render in good faith the certification required by this clause. The knowledge and information of the prospective participant is not required to exceed that which is normally possessed by a prudent person in the ordinary course of business dealings.

j. Except for transactions authorized under paragraph (f) of these instructions, if a participant in a covered transaction knowingly enters into a lower tier covered transaction with a person who is suspended, debarred, ineligible, or voluntarily excluded from participation in this transaction, in addition to other remedies available to the Federal Government, the department or agency may terminate this transaction for cause or default. 2 CFR 180.325.

* * * * *

2. Certification Regarding Debarment, Suspension, Ineligibility and Voluntary Exclusion – First Tier Participants:

a. The prospective first tier participant certifies to the best of its knowledge and belief, that it and its principals:

(1) Are not presently debarred, suspended, proposed for debarment, declared ineligible, or voluntarily excluded from participating in covered transactions by any Federal department or agency, 2 CFR 180.335;

(2) Have not within a three-year period preceding this proposal been convicted of or had a civil judgment rendered against them for commission of fraud or a criminal offense in connection with obtaining, attempting to obtain, or performing a public (Federal, State, or local) transaction or contract under a public transaction; violation of Federal or State antitrust statutes or commission of embezzlement, theft, forgery, bribery, falsification or destruction of records, making false statements, or receiving stolen property, 2 CFR 180.800;

(3) Are not presently indicted for or otherwise criminally or civilly charged by a governmental entity (Federal, State or local) with commission of any of the offenses enumerated in paragraph (a)(2) of this certification, 2 CFR 180.700 and 180.800; and

(4) Have not within a three-year period preceding this application/proposal had one or more public transactions (Federal, State or local) terminated for cause or default. 2 CFR 180.335(d).

(5) Are not a corporation that has been convicted of a felony violation under any Federal law within the two-year period preceding this proposal (USDOT Order 4200.6 implementing appropriations act requirements); and

(6) Are not a corporation with any unpaid Federal tax liability that has been assessed, for which all judicial and administrative remedies have been exhausted, or have lapsed, and that is not being paid in a timely manner pursuant to an agreement with the authority responsible for collecting the tax liability (USDOT Order 4200.6 implementing appropriations act requirements).

b. Where the prospective participant is unable to certify to any of the statements in this certification, such prospective participant should attach an explanation to this proposal. 2 CFR 180.335 and 180.340.

* * * * *

3. **Instructions for Certification - Lower Tier Participants:**

(Applicable to all subcontracts, purchase orders, and other lower tier transactions requiring prior FHWA approval or estimated to cost $25,000 or more - 2 CFR Parts 180 and 1200). 2 CFR 180.220 and 1200.220.

a. By signing and submitting this proposal, the prospective lower tier participant is providing the certification set out below.

b. The certification in this clause is a material representation of fact upon which reliance was placed when this transaction was entered into. If it is later determined that the prospective lower tier participant knowingly rendered an erroneous certification, in addition to other remedies available to the Federal Government, the department, or agency with which this transaction originated may pursue available remedies, including suspension and/or debarment.

c. The prospective lower tier participant shall provide immediate written notice to the person to which this proposal is submitted if at any time the prospective lower tier participant learns that its certification was erroneous by reason of changed circumstances. 2 CFR 180.365.

d. The terms "covered transaction," "debarred," "suspended," "ineligible," "participant," "person," "principal," and "voluntarily excluded," as used in this clause, are defined in 2 CFR Parts 180, Subpart I, 180.900 – 180.1020, and 1200. You may contact the person to which this proposal is submitted for assistance in obtaining a copy of those regulations. “First Tier Covered Transactions” refers to any covered transaction between a recipient or subrecipient of Federal funds and a participant (such as the prime or general contract). “Lower Tier Covered Transactions” refers to any covered transaction under a First Tier Covered Transaction (such as subcontracts). “First Tier Participant” refers to the participant who has entered into a covered transaction with a recipient or subrecipient of Federal funds (such as the prime or general contractor). “Lower Tier Participant” refers any participant who has entered into a covered transaction with a First Tier Participant or other Lower Tier Participants (such as subcontractors and suppliers).

e. The prospective lower tier participant agrees by submitting this proposal that, should the proposed covered transaction be entered into, it shall not knowingly enter into any lower tier covered transaction with a person who is debarred, suspended, declared ineligible, or voluntarily excluded from participation in this covered transaction, unless authorized by the department or agency with which this transaction originated. 2 CFR 1200.220 and 1200.332.

f. The prospective lower tier participant further agrees by submitting this proposal that it will include this clause titled "Certification Regarding Debarment, Suspension, Ineligibility and Voluntary Exclusion-Lower Tier Covered Transaction," without modification, in all lower tier covered transactions and in all solicitations for lower tier covered transactions exceeding the $25,000 threshold. 2 CFR 180.220 and 1200.220.

g. A participant in a covered transaction may rely upon a certification of a prospective participant in a lower tier covered transaction that is not debarred, suspended, ineligible, or voluntarily excluded from the covered transaction, unless it knows that the certification is erroneous. A participant is responsible for ensuring that its principals are not suspended, debarred, or otherwise ineligible to participate in covered transactions. To verify the eligibility of its principals, as well as the eligibility of any lower tier prospective participants, each participant may, but is not required to, check the System for Award Management website (https://www.sam.gov/), which is compiled by the General Services Administration. 2 CFR 180.300, 180.320, 180.330, and 180.335.

h. Nothing contained in the foregoing shall be construed to require establishment of a system of records in order to render in good faith the certification required by this clause. The knowledge and information of participant is not required to exceed that which is normally possessed by a prudent person in the ordinary course of business dealings.

i. Except for transactions authorized under paragraph e of these instructions, if a participant in a covered transaction knowingly enters into a lower tier covered transaction with a person who is suspended, debarred, ineligible, or voluntarily excluded from participation in this transaction, in addition to other remedies available to the Federal Government, the department or agency with which this transaction originated may pursue available remedies, including suspension and/or debarment. 2 CFR 180.325.

* * * * *

4. Certification Regarding Debarment, Suspension, Ineligibility and Voluntary Exclusion--Lower Tier Participants:

a. The prospective lower tier participant certifies, by submission of this proposal, that neither it nor its principals:

(1) is presently debarred, suspended, proposed for debarment, declared ineligible, or voluntarily excluded from participating in covered transactions by any Federal department or agency, 2 CFR 180.355;

(2) is a corporation that has been convicted of a felony violation under any Federal law within the two-year period preceding this proposal (USDOT Order 4200.6 implementing appropriations act requirements); and

(3) is a corporation with any unpaid Federal tax liability that has been assessed, for which all judicial and administrative remedies have been exhausted, or have lapsed, and that is not being paid in a timely manner pursuant to an agreement with the authority responsible for collecting the tax liability. (USDOT Order 4200.6 implementing appropriations act requirements)

b. Where the prospective lower tier participant is unable to certify to any of the statements in this certification, such prospective participant should attach an explanation to this proposal.

* * * * *

X. CERTIFICATION REGARDING USE OF CONTRACT FUNDS FOR LOBBYING

This provision is applicable to all Federal-aid construction contracts and to all related subcontracts which exceed $100,000. 49 CFR Part 20, App. A.

1. The prospective participant certifies, by signing and submitting this bid or proposal, to the best of his or her knowledge and belief, that:

a. No Federal appropriated funds have been paid or will be paid, by or on behalf of the undersigned, to any person for influencing or attempting to influence an officer or employee of any Federal agency, a Member of Congress, an officer or employee of Congress, or an employee of a Member of Congress in connection with the awarding of any Federal contract, the making of any Federal grant, the making of any Federal loan, the entering into of any cooperative agreement, and the extension, continuation, renewal, amendment, or modification of any Federal contract, grant, loan, or cooperative agreement.

b. If any funds other than Federal appropriated funds have been paid or will be paid to any person for influencing or attempting to influence an officer or employee of any Federal agency, a Member of Congress, an officer or employee of Congress, or an employee of a Member of Congress in connection with this Federal contract, grant, loan, or cooperative agreement, the undersigned shall complete and submit Standard Form-LLL, "Disclosure Form to Report Lobbying," in accordance with its instructions.

2. This certification is a material representation of fact upon which reliance was placed when this transaction was made or entered into. Submission of this certification is a prerequisite for making or entering into this transaction imposed by 31 U.S.C. 1352. Any person who fails to file the required certification shall be subject to a civil penalty of not less than $10,000 and not more than $100,000 for each such failure.

3. The prospective participant also agrees by submitting its bid or proposal that the participant shall require that the language of this certification be included in all lower tier subcontracts, which exceed $100,000 and that all such recipients shall certify and disclose accordingly.

XI. USE OF UNITED STATES-FLAG VESSELS:

This provision is applicable to all Federal-aid construction contracts, design-build contracts, subcontracts, lower-tier subcontracts, purchase orders, lease agreements, or any other covered transaction. 46 CFR Part 381.

This requirement applies to material or equipment that is acquired for a specific Federal-aid highway project. 46 CFR 381.7. It is not applicable to goods or materials that come into inventories independent of an FHWA funded-contract.

When oceanic shipments (or shipments across the Great Lakes) are necessary for materials or equipment acquired for a specific Federal-aid construction project, the bidder, proposer, contractor, subcontractor, or vendor agrees:

1. To utilize privately owned United States-flag commercial vessels to ship at least 50 percent of the gross tonnage (computed separately for dry bulk carriers, dry cargo liners, and tankers) involved, whenever shipping any equipment, material, or commodities pursuant to this contract, to the extent such vessels are available at fair and reasonable rates for United States-flag commercial vessels. 46 CFR 381.7.

2. To furnish within 20 days following the date of loading for shipments originating within the United States or within 30 working days following the date of loading for shipments originating outside the United States, a legible copy of a rated, ‘on-board’ commercial ocean bill-of-lading in English for each shipment of cargo described in paragraph (b)(1) of this section to both the Contracting Officer (through the prime contractor in the case of subcontractor bills-of-lading) and to the Office of Cargo and Commercial Sealift (MAR-620), Maritime Administration, Washington, DC 20590. (MARAD requires copies of the ocean carrier's (master) bills of lading, certified onboard, dated, with rates and charges. These bills of lading may contain business sensitive information and therefore may be submitted directly to MARAD by the Ocean Transportation Intermediary on behalf of the contractor). 46 CFR 381.7.

ATTACHMENT A - EMPLOYMENT AND MATERIALS PREFERENCE FOR APPALACHIAN DEVELOPMENT HIGHWAY SYSTEM OR APPALACHIAN LOCAL ACCESS ROAD CONTRACTS (40 U.S.C. sections 14501(d) and 14701 and the Appalachian Regional Commission Code as authorized under 40 U.S.C. section 14302)
This provision is applicable to all Federal-aid projects funded under the Appalachian Regional Development Act of 1965.

1. During the performance of this contract, the contractor undertaking to do work which is, or reasonably may be, done as on-site work, shall give preference to qualified persons who regularly reside in the labor area as designated by the DOL wherein the contract work is situated, or the subregion, or the Appalachian counties of the State wherein the contract work is situated, except:

a. To the extent that qualified persons regularly residing in the area are not available.

b. For the reasonable needs of the contractor to employ supervisory or specially experienced personnel necessary to assure an efficient execution of the contract work.

c. For the obligation of the contractor to offer employment to present or former employees as the result of a lawful collective bargaining contract, provided that the number of nonresident persons employed under this subparagraph (1c) shall not exceed 20 percent of the total number of employees employed by the contractor on the contract work, except as provided in subparagraph (4) below.

2. The contractor shall place a job order with the State Employment Service indicating (a) the classifications of the laborers, mechanics and other employees required to perform the contract work, (b) the number of employees required in each classification, (c) the date on which the participant estimates such employees will be required, and (d) any other pertinent information required by the State Employment Service to complete the job order form. The job order may be placed with the State Employment Service in writing or by telephone. If during the course of the contract work, the information submitted by the contractor in the original job order is substantially modified, the participant shall promptly notify the State Employment Service.

3. The contractor shall give full consideration to all qualified job applicants referred to him by the State Employment Service. The contractor is not required to grant employment to any job applicants who, in his opinion, are not qualified to perform the classification of work required.

4. If, within one week following the placing of a job order by the contractor with the State Employment Service, the State Employment Service is unable to refer any qualified job applicants to the contractor, or less than the number requested, the State Employment Service will forward a certificate to the contractor indicating the unavailability of applicants. Such certificate shall be made a part of the contractor's permanent project records. Upon receipt of this certificate, the contractor may employ persons who do not normally reside in the labor area to fill positions covered by the certificate, notwithstanding the provisions of subparagraph (1c) above.

5. The provisions of 40 U.S.C. 14501 allow the contracting agency to provide a contractual preference for the use of mineral resource materials native to the Appalachian region.

6. The contractor shall include the provisions of Sections 1 through 4 of this Attachment A in every subcontract for work which is, or reasonably may be, done as on-site work.

MISSISSIPPI DEPARTMENT OF TRANSPORTATION

SPECIAL PROVISION NO. 907-101-1 **CODE: (IS)**

DATE: 07/20/2023

SUBJECT: Definitions and Terms

Section 101, Definitions and Terms, of the 2017 Edition of the Mississippi Standard Specifications for Road and Bridge Construction is hereby amended as follows.

907-101.01--Abbreviations. After the abbreviation API on page 1, add the following.

APL Approved Products List

Replace the abbreviation for AWPA on page 1 with the following.

AWPA American Wood Protection Association

907-101.02--Definitions. Delete the sentence after the list of holidays in Subsection 101.02 on page 6 under **holidays, legal**, and substitute the following.

When a legal holiday falls on a Saturday or Sunday, the succeeding Monday, or as proclaimed by the Governor, will be observed as a legal holiday.

Delete the definition for Notice to Proceed in Subsection 101.02 on page 8, and substitute the following.

Notice to Proceed - Written notice to the Contractor to proceed with the contract work.

Delete the definition for "Plans" in Subsection 101.02 on page 8, and substitute the following.

plans - The approved plans, profiles, typical cross-sections, working drawings and supplemental drawings, or exact reproduction thereof, that show the location, character, dimensions, and details of the work to be done. The plans may also include electronic files, referred to on the plans as Electronic Files Identified as Plans, which may include engineering models, spreadsheets, CADD files or other electronic files used to convey design intent. When the contract does not have an official set of plans, reference to the plans shall mean the contract documents.

MISSISSIPPI DEPARTMENT OF TRANSPORTATION

SPECIAL PROVISION NO. 907-102-2 **CODE: (IS)**

DATE: 11/22/2017

SUBJECT: Bidding Requirements and Conditions

Section 102, Bidding Requirements and Conditions, of the 2017 Edition of the Mississippi Standard Specifications for Road and Bridge Construction is hereby amended as follows.

907-102.01--Prequalification of Bidders. Delete the last sentence of the third paragraph of Subsection 102.01 on page 13, and substitute the following.

The Bidder's Certificate of Responsibility number must be on file with the Department's Contract Administration Division prior to request for permission to bid.

907-102.02--Contents of Proposal Forms. Delete the fourth paragraph in Subsection 102.02 on page 13, and substitute the following.

Prospective bidders must complete an online request for permission to be eligible to bid a project. Upon approval, the bidder will be authorized to submit a bid electronically using Bid Express at http://bidx.com.

MISSISSIPPI DEPARTMENT OF TRANSPORTATION

SPECIAL PROVISION NO. 907-104-2 **CODE: (SP)**

DATE: 06/17/2025

SUBJECT: Minor Alteration to the Contract

Section 104, Scope of Work, of the 2017 Edition of the Mississippi Standard Specifications for Road and Bridge Construction is hereby amended as follows:

907-104.02--Alterations of Plans or Character of Work.

907-104.02.3--Minor Alteration to the Contract. In the first paragraph of Subsection 104.02.3 on page 25, change $10,000.00 to $25,000.00.

MISSISSIPPI DEPARTMENT OF TRANSPORTATION

SPECIAL PROVISION NO. 907-105-3 **CODE: (SP)**

DATE: 07/21/2026

SUBJECT: Control of Work

Section 105, Control of Work, of the 2017 Edition of the Mississippi Standard Specifications for Road and Bridge Construction is hereby amended as follows.

907-105.01--Authority of the Engineer. Delete the first sentence of the second paragraph of Subsection 105.01 on page 31, and substitute the following.

The Engineer has the right to suspend the work wholly or in part and to withhold payments because of the Contractor's failure to correct conditions unsafe for workmen or the general public, for failure to carry out provisions of the Contract, or for failure to carry out orders.

907-105.02--Plans and Working Drawings. Delete the first paragraph of Subsection 105.02 on page 31, and substitute the following.

After the contract is executed by the Executive Director, the Contractor will receive, free of charge, two bound copies of the proposal and contract documents (one executed and one blank) and five half-scale copies of the Plans and Electronic Files Identified as Plans. The Contractor shall have one copy of the proposal and contract documents and one half-scale copy of the plans available at all times during work activity on the project.

MISSISSIPPI DEPARTMENT OF TRANSPORTATION

SPECIAL PROVISION NO. 907-106-5 **CODE: (IS)**

DATE: 4/20/2026

SUBJECT: Control of Materials

Section 106, Control of Materials, of the 2017 Edition of the Mississippi Standard Specifications for Road and Bridge Construction is hereby amended as follows.

After Subsection 106.13 on page 47, add the following:

907-106.14--Buy America/Build America. Buy America (BABA) Materials Sourcing Requirements for Federal-Aid Projects.

The "Infrastructure Investment and Jobs Act" (the "Act"), or Bipartisan Infrastructure Law (BIL), was enacted on November 15, 2021 (See Public Law No. 117-58, Sections 70901-70953). The Build America, Buy America (BABA) provisions of the Act expand the previous Buy America requirements beyond what was currently required for steel and iron products.

Articles, materials, or supplies will only be classified under one of the following categories: iron or steel products, construction materials, manufactured products, or excluded materials (as further described in subsection 907-700.01.1). An article, material, or supply shall not be considered to fall under multiple categories. The applicable classification of the article, material, or supply being permanently incorporated into a construction project will be based on the status at the time the article, material, or supply is brought to the project work site.

Any iron or steel products, construction materials, and manufactured products that are permanently incorporated into a construction project, shall be domestically manufactured and compliant with current requirements of the Act, including 2 CFR 184, 2 CFR 200.322, 0MB 24-02 Memo and related requirements therein, and with the current requirements within 23 CFR 635.410.

It is the prime Contractor's responsibility to ensure all submittals and/or certifications required by the above listed Buy America/BABA provisions are submitted to the Project Engineer prior to the article, material, or supply being incorporated into the work.

Buy America/BABA provisions do not apply to temporarily used articles, materials, or supplies that:
(1) are specified to be removed at the end of the project per the contract provisions, or (2) are specified to remain in place per the contract provisions and are also documented by the Department in the contract provisions to be removed in a subsequent imminent, near-term phased project.

The following categories, as described above, require Domestic Materials Self-Certification Form (as described within Subsection 907-700.01.2) on construction projects:

Iron or Steel Products
Construction Materials
Manufactured Products.

Buy America/BABA provisions do not apply to excluded materials.

A non-exclusive list of items that must comply with the above listed Buy America/BABA requirements and require the submittal of the Buy America Domestic Materials Self- Certification Form may be viewed at www.goMDOT.com under Business Center ➔ Engineering Standards/Guides/Manuals ➔ Construction Materials.

The list of items referenced above is not all-inclusive. All iron or steel products, construction material, and manufactured products permanently incorporated into the project shall comply with the applicable Buy America/Build America (BABA) requirements, regardless of whether such items are specifically Identified.

MISSISSIPPI DEPARTMENT OF TRANSPORTATION

SPECIAL PROVISION NO. 907-108-4 **CODE: (SP)**

DATE: 10/07/2020

SUBJECT: Subletting of Contract

Section 108, Prosecution and Progress, of the 2017 Edition of the Mississippi Standard Specifications for Road and Bridge Construction is hereby amended as follows.

907-108.01--Subletting of Contract.

907-108.01.1--General. Delete the third sentence of the tenth paragraph of Subsection 108.01.1 on the bottom of page 72.

MISSISSIPPI DEPARTMENT OF TRANSPORTATION

SPECIAL PROVISION NO. 907-108-6 **CODE: (SP)**

DATE: 03/11/2025

SUBJECT: Default and Termination of Contract

Section 108, Prosecution and Progress, of the 2017 Edition of the Mississippi Standard Specifications for Road and Bridge Construction is hereby amended as follows.

907-108.08--Default and Termination of Contract. At the end of the Subsection 108.08 on page 85, add the following.

907-108.08.1--Debarment of Contractor. If the Contractor is declared to be in default under this Subsection and the Contract terminated for the reason(s) indicated in Subsections 108.08 (d), (f), or (g) above, the Commission may, in its discretion and in addition to default and termination, declare the Contractor to be debarred from bidding on any other projects for a period of one (1) year from the date of the termination letter. If the debarred Contractor has multiple on-going Contracts with the Commission and receives a one (1) year debarment, the on-going Contract(s) may continue; however, the Contractor will not be allowed to bid another project until one (1) year has passed from date of the termination letter.

MISSISSIPPI DEPARTMENT OF TRANSPORTATION

SPECIAL PROVISION NO. 907-109-5 **CODE: (IS)**

DATE: 11/14/2023

SUBJECT: Measurement and Payment

Section 109, Measurement and Payment, of the 2017 Edition of the Mississippi StandardSpecifications for Road and Bridge Construction is hereby amended as follows.

907-109.01--Measurement of Quantities. Delete the sixth full paragraph of Subsection 109.01on page 88, and substitute the following.

If appropriate based on the specific circumstances of the project, the Contractor may request that material specified to be measured by the cubic yard or ton be converted to the other measure. The Contractor must submit this request to the Engineer. The Engineer will provide an approval or denial in writing. The decision is in the sole discretion of the Engineer. If approved, factors for this conversion will be determined by the District Materials Engineer and agreed to by the Contractor. The conversion of the materials along with the conversion factor will be incorporated into the Contract by supplemental agreement. The supplemental agreement must be executed before such method of measurement is used.

907-109.04--Extra Work.

907-109.04.1--Supplemental Agreement. Delete the second paragraph of Subsection 109.04.1 on page 90.

907-109.04.2--Force Account Agreement. Delete the last sentence of subparagraph (c) in Subsection 109.04.2 on page 91, and substitute the following.

An amount will be added equal to fifteen percent (15%) of the sum thereof, excluding sales tax.

Delete subparagraph (d) in Subsection 109.04.2 on pages 91 & 92, and substitute the following.

(d) **Equipment.** Equipment used for force account work shall be of sufficient size and type necessary to perform the required work in an economic and expeditious manner. The Contractor must provide the manufacturer, make, model, year, type of fuel and other necessary information to determine proper hourly payment rates. Subject to advance approval of the Engineer, actual transportation cost for a distance of not more than 200 miles will be reimbursed for equipment not already on the project.

For equipment authorized by the Engineer for use on the force account work, the Engineer will use the equipment rental rates from the "*Rental Rate Blue Book*" as published on the Equipment Watch website www.equipmentwatch.com for the time period the force account work is authorized to determine payment to the Contractor. The maximum allowable rates

are determined as follows:

1. The hourly equipment rate will equal the FHWA total hourly rate. This rate takes into account adjustment factors for age and region.
2. The hourly estimated operating costs have been included in the FHWA total hourly rate.
3. The idle and standby rates shall be as listed in the "*Rental Rate Blue Book*" as reported by *Equipment Watch*.
4. These rates include the basic machine plus any necessary attachments.

Standby rates shall apply when equipment is not in operation and is approved by the Engineer to standby for later use to complete the work. Idle rates shall apply to equipment located on the project and the engine is burning fuel but no ground engaging or other components are actively engaged in meaningful work. In general, idle or standby rates shall apply when equipment is not in use, but will be needed again to complete the work and the cost of moving the equipment will exceed the accumulated standby cost. If the idle standby cost should exceed the equipment moving cost to or from the work site, the Contractor will be entitled to the moving cost only. Idle or standby rates will be used under the following conditions:

1. The equipment is totally dedicated to the force account work and not used intermittently on other work.
2. Idle or standby cost will be considered only after equipment has been operated on force account work.
3. The sum of idle or standby time and operating time shall not exceed eight (8) hours per day or 40 hours in a week.
4. Idle or standby payment will not apply to days not normally considered to be work days such as holidays, weekends, or days of inclement weather when no other work is taking place.

The Department will not pay for idle or standby time when equipment is inoperable, for time spent repairing equipment, or for the time elapsed after the Engineer has advised the Contractor that the equipment is no longer needed. The Department will determine if it will be more cost effective to pay standby time on approved equipment on site or for multiple mobilizations.

If equipment is needed, which is not included in the *Rental Rate Blue Book* as reported by *Equipment Watch*, the Department and Contractor will agree upon reasonable rental rates in writing before the equipment is used.

All equipment shall be subject to approval from day to day in accordance with the requirements of Subsection 108.05.

907-109.06--Partial Payment.

907-109.06.2--Advancement on Materials.
Delete the next to last paragraph of Subsection 109.06.2 on page 95, and substitute the following.

Materials for which an advanced payment has been allowed must be paid for by the Contractor within 30 days of the estimate on which the advanced payment was first allowed and proof of said payment must be verified by the supplier. If proof of payment is not furnished within the allowable 30 days, the advanced payment will be deducted on subsequent current estimates until such time that proof of payment is furnished.

907-109.07--Changes in Material Costs. After the fifth paragraph of Subsection 109.07 on page 96, change the web address to the following.

https://mdot.ms.gov/portal/current_letting

MISSISSIPPI DEPARTMENT OF TRANSPORTATION

SUPPLEMENT TO SPECIAL PROVISION NO. 907-618-4

DATE: 11/5/2026

PROJECT: ER-0240-00(021) / 110299301 – Covington County

Delete the paragraph in Subsection 907-618.01.2 on page 1, and substitute the following.

For compliance with the traffic control plan, the Contractor will be required to install and maintain traffic control devices at various locations throughout the project. Payment for these devices will be included in the price bid for pay item no. 907-618-A: Maintenance of Traffic per lump sum.

Additional traffic control devices will be required as follows.

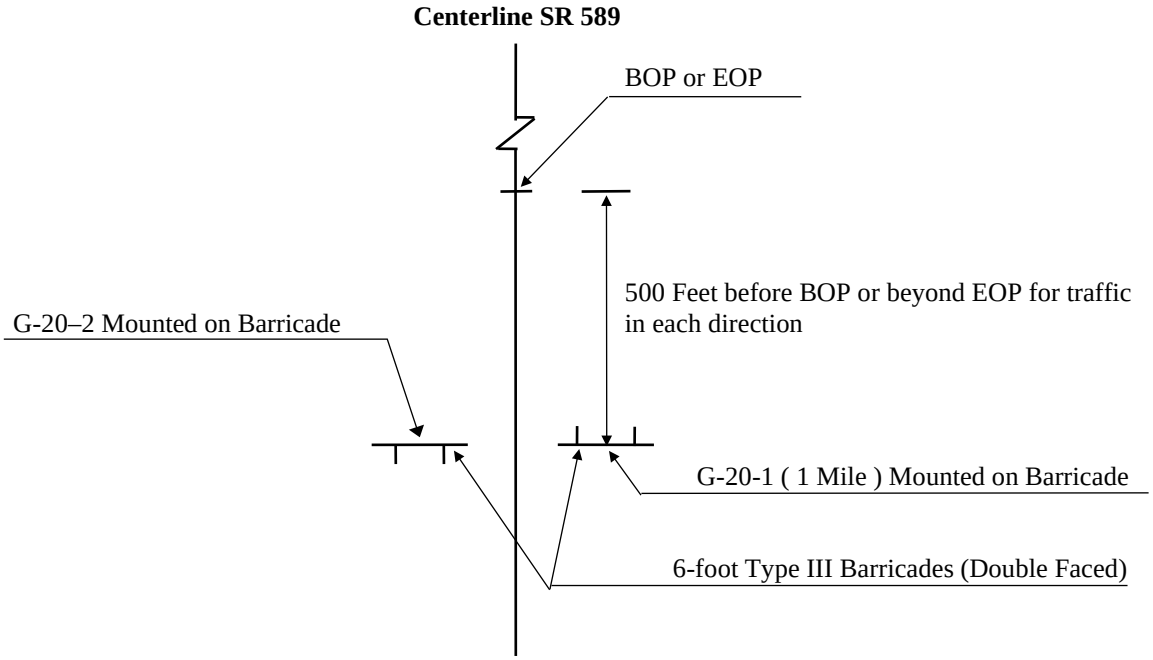

ADDITIONAL TRAFFIC CONTROL SIGNS REQUIRED:

- 0 - W20-1 “AHEAD” signs required. One (1) W20-1 “AHEAD” sign is required at each local road or street entering the project.
- 0 - R4-1 “DO NOT PASS” signs required.
- 0 - R4-2 “PASS WITH CARE” signs required.
- 0 - W14-3 “NO PASSING ZONE” signs required.

R4-1 “DO NOT PASS”, R4-2 “PASS WITH CARE”, and W14-3 “NO PASSING ZONE” signs are required in accordance with Subsection 618.03.3, this drawing, and as specified in the Manual on Uniform Traffic Control Devices.

All construction signs and barricades shown on this page shall be included in the bid price for pay item 907-618-A, Maintenance of Traffic. Fluorescent orange sheeting shall be used on all construction and traffic control signs except for R4-1 and R4-2 signs which shall be black legend and border on white background.

PROJECT: ER-0008-02(137) / 110300302, ER-0008-02(139) / 110377301, & ER-0008-02(138) / 110378301 – Covington County

Delete the paragraph in Subsection 907-618.01.2 on page 1, and substitute the following.

For compliance with the traffic control plan, the Contractor will be required to install and maintain traffic control devices at various locations throughout the project. Payment for these devices will be included in the price bid for pay item no. 907-618-A: Maintenance of Traffic per lump sum.

Additional traffic control devices will be required as follows.

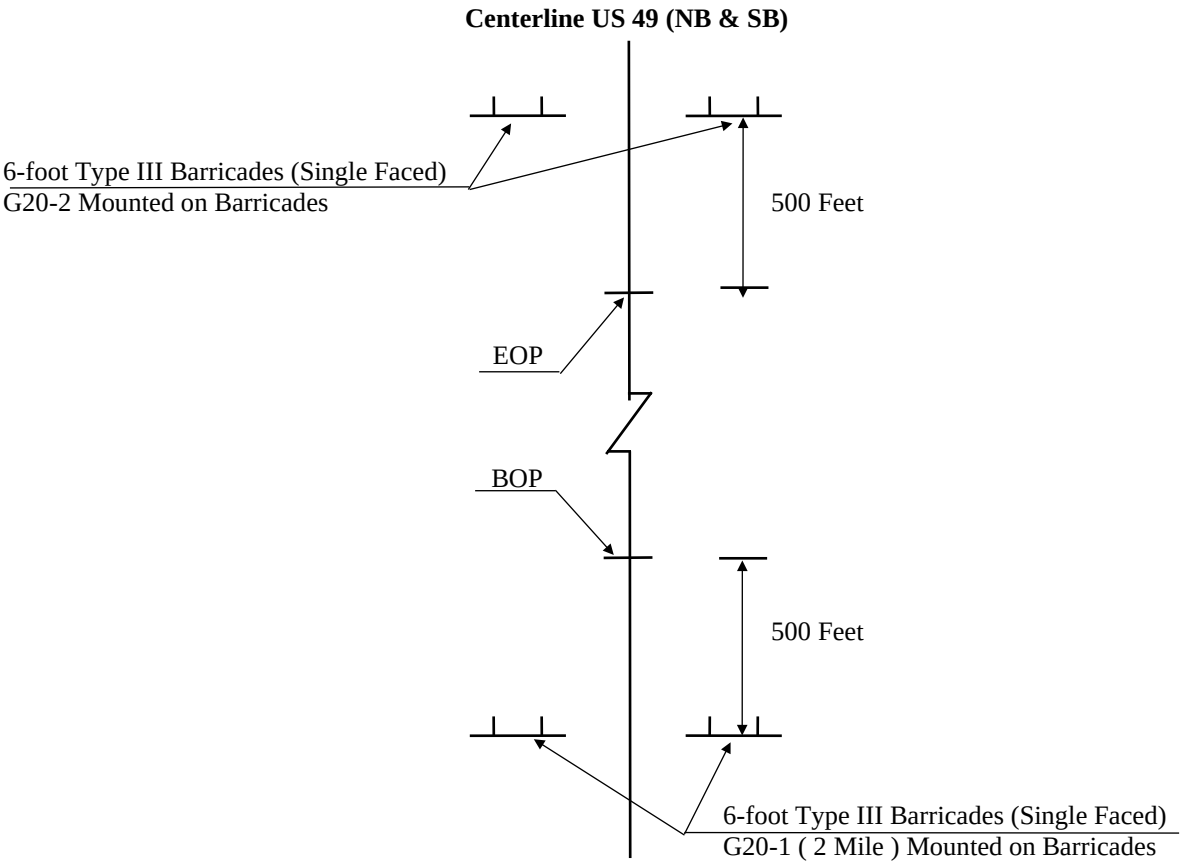

ADDITIONAL TRAFFIC CONTROL SIGNS REQUIRED:

15 - W20-1 "AHEAD" signs required. One (1) sign is required at each local road or street entering the project.

All construction signs and barricades shown on this page shall be included in the bid price for pay item 907-618-A, Maintenance of Traffic. Fluorescent orange sheeting shall be used on all construction and traffic control signs.

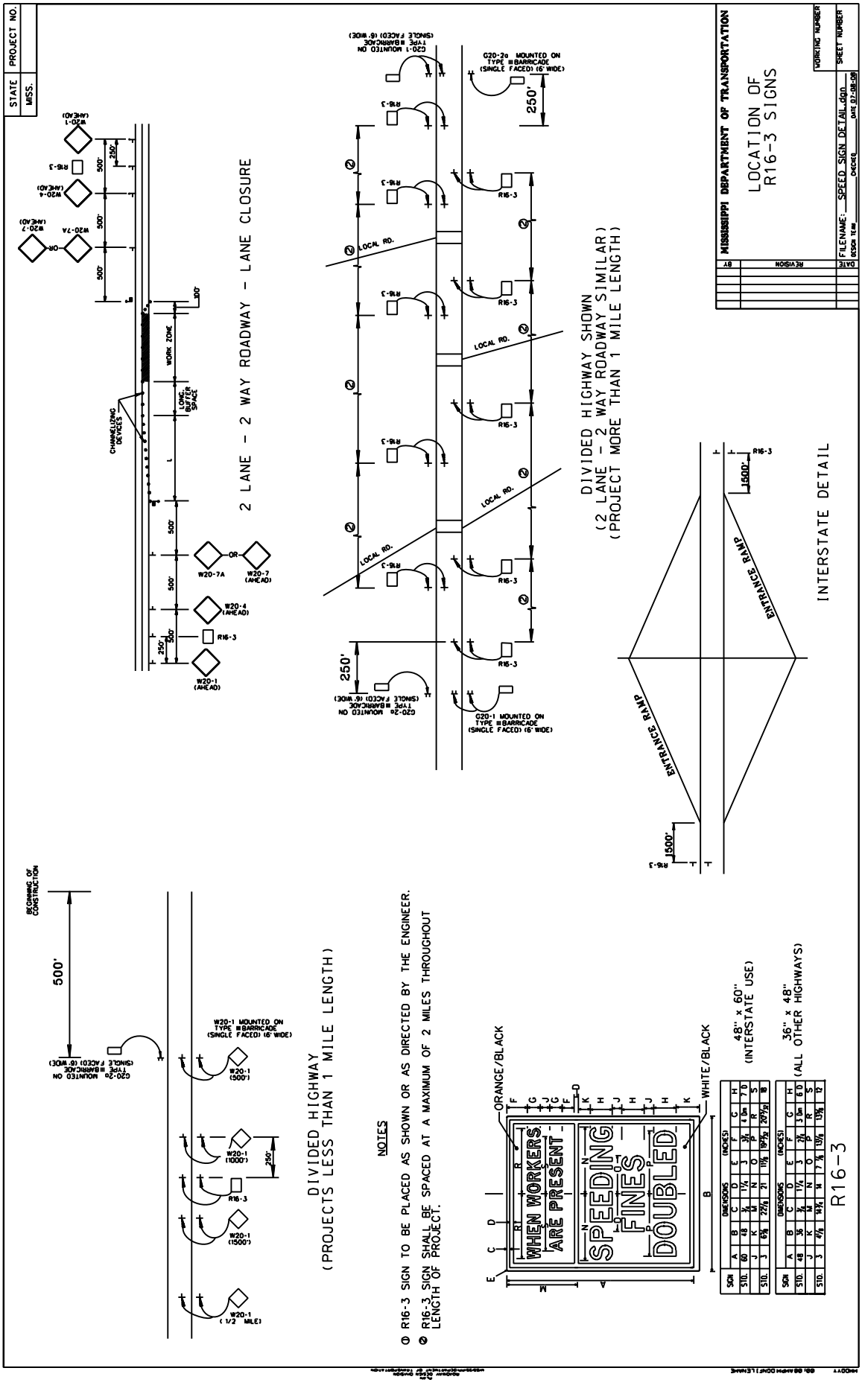
STATE MISS.
PROJECT NO.
MISSISSIPPI DEPARTMENT OF TRANSPORTATION
LOCATION OF R16-3 SIGNS
WORKING NUMBER
SHEET NUMBER
REVISION
BY
DATE
FILENAME: SPEED_SIGN_DETAIL.dgn
DESIGN TEAM
CHECKED
DATE 07-08-09
2 LANE - 2 WAY ROADWAY - LANE CLOSURE
DIVIDED HIGHWAY SHOWN
(2 LANE - 2 WAY ROADWAY SIMILAR)
(PROJECT MORE THAN 1 MILE LENGTH)
INTERSTATE DETAIL
DIVIDED HIGHWAY
(PROJECTS LESS THAN 1 MILE LENGTH)
BEGINNING OF CONSTRUCTION
500'
250'
1500'
CHANNELIZING DEVICES
LONG BUFFER SPACE
WORK ZONE
LOCAL RD.
ENTRANCE RAMP
EXIT RAMP
W20-1 (1/2 MILE)
W20-1 (1500')
W20-1 (1000')
W20-1 (500')
W20-4 (AHEAD)
W20-7A
W20-7 (AHEAD)
W20-7A (AHEAD)
W20-6 (AHEAD)
W20-1 (AHEAD)
R16-3
G20-2b MOUNTED ON TYPE III BARRICADE (SINGLE FACED) (6' WIDE)
G20-2a MOUNTED ON TYPE III BARRICADE (SINGLE FACED) (6' WIDE)
G20-1 MOUNTED ON TYPE III BARRICADE (SINGLE FACED) (6' WIDE)
W20-1 MOUNTED ON TYPE III BARRICADE (SINGLE FACED) (6' WIDE)
NOTES
① R16-3 SIGN TO BE PLACED AS SHOWN OR AS DIRECTED BY THE ENGINEER.
② R16-3 SIGN SHALL BE SPACED AT A MAXIMUM OF 2 MILES THROUGHOUT LENGTH OF PROJECT.
WHEN WORKERS ARE PRESENT
SPEEDING FINES DOUBLED
ORANGE/BLACK
WHITE/BLACK
48" x 60" (INTERSTATE USE)
36" x 48" (ALL OTHER HIGHWAYS)
R16-3

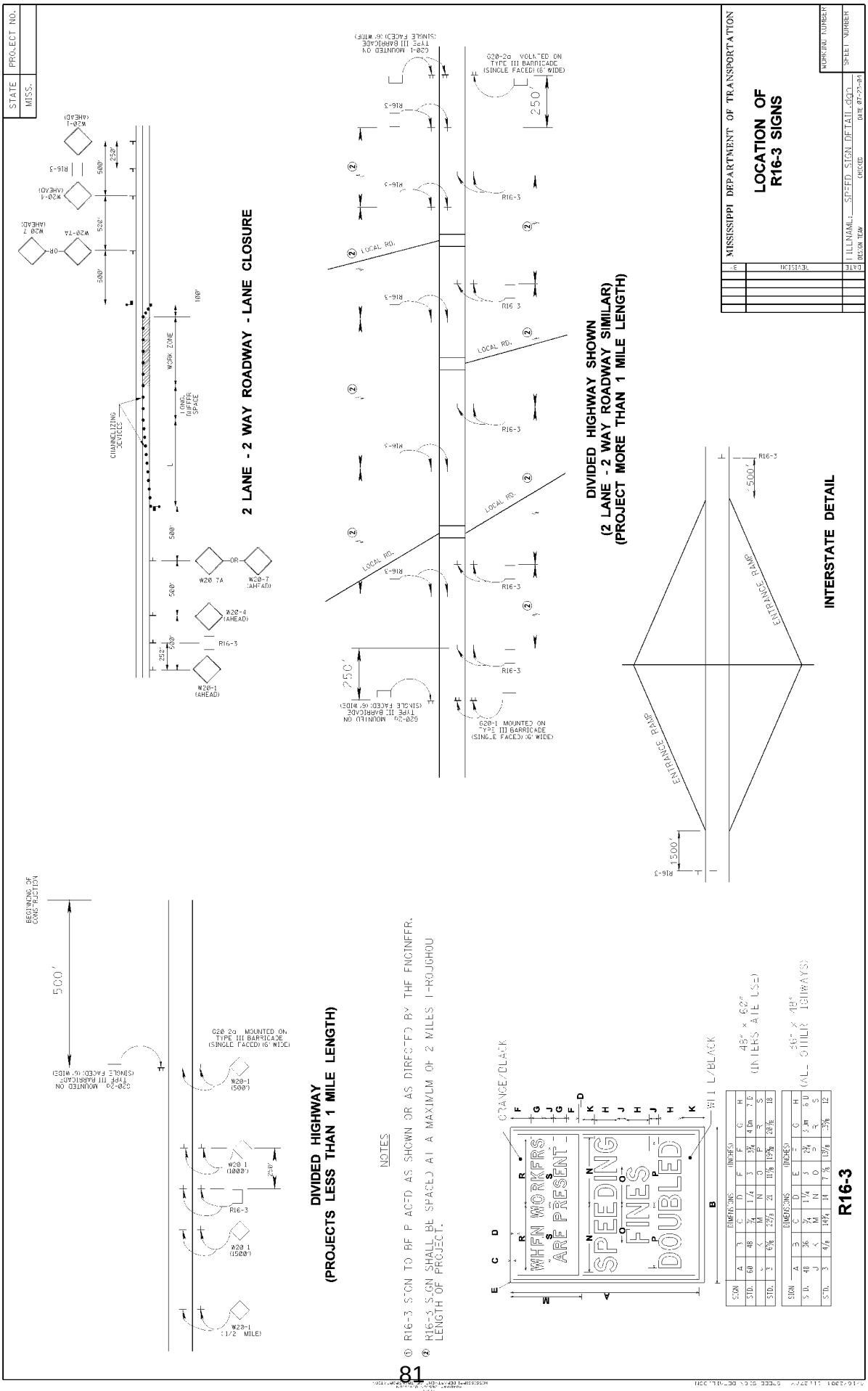
STATE MISS.
PROJECT NO.
MISSISSIPPI DEPARTMENT OF TRANSPORTATION
LOCATION OF R16-3 SIGNS
WORKZONE NUMBER
SHEET NUMBER
DESIGN TEAM
CHECKED
DATE 07-29-21
2 LANE - 2 WAY ROADWAY - LANE CLOSURE
DIVIDED HIGHWAY SHOWN (2 LANE - 2 WAY ROADWAY SIMILAR) (PROJECT MORE THAN 1 MILE LENGTH)
INTERSTATE DETAIL
DIVIDED HIGHWAY (PROJECTS LESS THAN 1 MILE LENGTH)
NOTES
① R16-3 SIGN TO BE PLACED AT A MAXIMUM OF 2 MILES FROM THE BEGINNING OF PROJECT.
② R16-3 SIGN SHALL BE SPACED AT A MAXIMUM OF 2 MILES THROUGHOUT LENGTH OF PROJECT.
ORANGE/BLACK
WHITE/BLACK
SPEEDING MAY FINES ARE PRESENT DOUBLED
48" x 60" (INTERSTATE USE)
36" x 48" (ALL OTHER HIGHWAYS)
R16-3

MISSISSIPPI DEPARTMENT OF TRANSPORTATION

SPECIAL PROVISION NO. 907-618-4 **CODE: (SP)**

DATE: 02/01/2018

SUBJECT: Additional Signing Requirements

Section 618, Maintenance of Traffic and Traffic Control Plan, of the 2017 Edition of the Mississippi Standard Specifications for Road and Bridge Construction is hereby amended as follows.

907-618.01.2--Traffic Control Plan. At the end of Subsection 618.01.2 on page 441, add the following:

For compliance with the traffic control plan, the Contractor will be required to install and maintain traffic control devices at various locations throughout the project. Payment for these devices will be included in the price bid for pay item no. 618-A, Maintenance of Traffic per lump sum.

MISSISSIPPI DEPARTMENT OF TRANSPORTATION

SPECIAL PROVISION NO. 907-618-12 **CODE: (SP)**

DATE: 05/03/2024

SUBJECT: Traffic Control Management

Section 618, Maintenance of Traffic and Traffic Control Plan, of the 2017 Edition of the Mississippi Standard Specifications for Road and Bridge Construction is hereby amended as follows.

907-618.01--Description.

907-618.01.2--Traffic Control Management. Delete subparagraph (g) of Subsection 618.01.2 on page 441, and substitute the following.

g) Perform a minimum of once-a-week inspections from the Notice to Proceed until a Partial or Final Maintenance Release is obtained. Once work begins, daily daytime inspections and weekly nighttime inspections are required on projects with predominantly daytime work, and daily nighttime inspections and weekly daytime inspections are required on projects with predominantly nighttime work. Weekly inspections will be allowed for periods outside of active construction. When lane closures are present or any non-fixed signs or traffic handling devices such as cones or barrels are in place, inspections shall be performed daily whether work is being performed or not.

907-618.05--Basis of Payment. Delete pay item 618-A on page 449 and substitute the following.

907-618-A: Maintenance of Traffic - lump sum

MISSISSIPPI DEPARTMENT OF TRANSPORTATION

SPECIAL PROVISION NO. 907-700-3 **CODE: (IS)**

DATE: 4/20/2026

SUBJECT: Materials and Tests

Section 700, Materials and Tests, of the 2017 Edition of the Mississippi Standard Specifications for Road and Bridge Construction is hereby amended as follows.

Delete fourth, fifth, sixth, and seventh paragraph of Subsection 700.01 on page 713, and add the following.

907-700.01.1--Buy America/Build America. Buy America (BABA) Requirements.

Iron or Steel Products. Iron or steel or wire products (including prestressed cables and strands) are products that consist wholly or predominantly of iron or steel or a combination of both.

Predominantly of iron or steel or a combination of both means that the cost of the iron and steel content exceeds 50 percent of the total cost of all components. The cost of iron and steel is the cost of the iron or steel mill products (such as bar, billet, slab, wire, plate, or sheet), castings, or forgings utilized in the manufacture of the product and a good faith estimate of the cost of the iron and steel components.

Iron or steel or wire products, as described above, that are permanently incorporated into a construction project must be produced domestically. All manufacturing processes for iron or steel or wire products, from the initial melting stage through the application of coatings, that are permanently incorporated into a construction project, must occur domestically. However, pig iron and processed, pelletized, and reduced iron ore manufactured outside of the United States may be used in the domestic manufacturing process for iron and/or steel and/or wire products. Coating includes all processes that protect or enhance the value of the material to which the coating is applied.

Construction Materials. Construction materials are articles, materials, or supplies that consist of only one of the items listed (non-ferrous metals, plastic and polymer-based products, glass, fiber-optic cables (including drop cables), optical fibers, lumber, drywall, and engineered woods). Minor additions of articles, materials, supplies, or binding agents to a construction material do not change the categorization of the construction material. All manufacturing processes for the listed construction materials, from the initial processes as described within 2 CFR 184.6 to the final processes as described within 2 CFR 184.6, that are permanently incorporated into a construction project, must occur domestically.

Manufactured Products. Manufactured products are articles, materials, or supplies that have been processed into a specific form or shape; or when combined with other articles, materials, or supplies create a product with different properties than the individual articles, materials, or supplies. An item that is classified as an iron or steel product, a construction material, or an excluded material is not a manufactured product. However, an article, material, or supply classified as a manufactured product

may include components that are iron or steel products, excluded materials, or other product categories as specified by law or in 2 CFR part 184. Mixtures of excluded materials delivered to a work site without final form for incorporation into a project are not a manufactured product. For construction projects obligated on or after October 1, 2025, the manufactured product must be manufactured domestically. For construction projects obligated on or after October 1, 2026, the manufactured product must be manufactured domestically and the cost of the components of the manufactured product that are mined, produced, or manufactured domestically is greater than 55 percent of the total cost of all components of the manufactured product.

Excluded Materials. Excluded materials, as listed in Section 70917(c) of the Build America, Buy America (BABA) Act, are cement and cementitious materials; aggregates such as stone, sand, or gravel; or aggregate binding agents or additives. However, an article, material, or supply classified as a manufactured product may include components that are iron or steel products, excluded materials, or other product categories as specified by law or in 2 CFR part 184. Mixtures of excluded materials delivered to a work site without final form for incorporation into a project are not a manufactured product.

Domestically shall be understood to mean all States of the United States, District of Columbia, Puerto Rico, American Samoa, Guam, and Virgin Islands and any other place subject to the jurisdiction of the United States.

907-700.01.2—Certificate of Compliance Requirements. Prior to incorporation into the work, the Contractor shall furnish the Project Engineer with a Domestic Materials Self-Certification Form documenting conformance to the requirements of Subsection 907-106.14. Attached hereto is the Domestic Materials Self-Certification Form that shall be furnished by the Contractor to the Project Engineer.

Domestic Materials
Self-Certification Form

This certification is for a manufacturer/supplier to certify the below articles, materials, or supplies are in compliance with the applicable domestic material content procurement preferences found in the Buy America Act requirements (23 CFR 635.410) and the Build America, Buy America Act (BABA) requirements (2 CFR part 184). The individual completing this form takes full responsibility for the information included in the form. State agencies have the authority to request additional details related to the information provided in the form. All forms shall be submitted via AASHTO DataMine for delivery to authorized governmental users through the Industry Document Repository. The manufacturer/supplier is required to include updates to process changes within 10 days of the change occurring via uploading a revised form into DataMine.

PART 1: COMPANY CONTACT INFORMATION

Company/Producer/Manufacturer Name:

Supplier Representative Name:

Contact Email Address: Contact Phone Number:

Date Form is Being Submitted: mm/dd/yyyy

PART 2: DETAILS OF THE ARTICLE, MATERIAL, OR SUPPLY:

Using Table 1 below, provide the classification of the article, material, or supply as one of the following: (1) iron or steel product; (2) construction material (3) manufactured product; or (4) excluded materials including Section 70917(c) materials.

Classification	
Producer of the Article, Material, or Supply:	
Product/Model/Part/Material:	
Manufacturing Address:	
Manufacturing City:	
Manufacturing State:	
Manufacturing Zip Code:	
DataMine # (if applicable):	
Federal/State/Local Project number(s):	
Pay Code Number (PCN):	
Project Item code:	
Project Item Description:	
Quantity Certified:	

TABLE 1: Material Classifications

(1) Iron or Steel Product	
Wholly or predominantly Iron or Steel, or a combination of both (23 CFR 635.410(b)(1)(ii))	Certification requires predominantly of iron or steel or a combination of both means that the cost of the iron and steel content exceeds 50 percent of the total cost of all its components. The cost of iron and steel is the cost of the iron or steel mill products (such as bar, billet, slab, wire, plate, or sheet), castings, or forgings utilized in the manufacture of the product and a good faith estimate of the cost of iron or steel components.
(2) Construction Material	
Non-Ferrous Metals (2 CFR 184.6(a)(1))	Certification requires all manufacturing processes, from initial smelting or melting through final shaping, coating, and assembly, occurred in the United States.
Plastic and Polymer based products (including polyvinyl chloride, composite building materials, and polymers used in fiber optic cables) (2 CFR 184.6(a)(2))	Certification requires all manufacturing processes, from initial combination of constituent plastic or polymer-based inputs, or where applicable, constituent composite materials, until the item is in its final form, occurred in the United States.
Glass (including optic glass) (2 CFR 184.6(a)(3))	Certification requires all manufacturing processes, from initial batching and melting of raw materials through annealing, cooling, and cutting, occurred in the United States.
Fiber Optic Cable (including drop cable) (2 CFR 184.6(a)(4))	Certification requires all manufacturing processes, from the initial ribboning (if applicable), through buffering, fiber stranding and jacking, occurred in the United States. All manufacturing processes also include the standards for glass and optical fiber, but not for non-ferrous metals, plastics and polymer-based products, or any others.
Optical Fiber (2 CFR 184.6(a)(5))	Certification requires all manufacturing processes, from the initial preform fabrication stage through the completion of the draw, occurred in the United States
Lumber (2 CFR 184.6(a)(6))	Certification requires all manufacturing processes, from initial debarking through treatment and planing, occurred in the United States.
Drywall (2 CFR 184.6(a)(7))	Certification requires all manufacturing processes, from initial blending of mined or synthetic gypsum plaster and additives through cutting and drying of sandwiched panels, occurred in the United States.
Engineered Wood (2 CFR 184.6(a)(8))	Certification requires all manufacturing processes, from initial combination of constituent materials until the wood product is in its final form, occurred in the United States.
(3) Manufactured Product	
Manufactured Products other than Precast Concrete Products and Intelligent Transportation Systems and Other Electronic Hardware Systems Installed on the Highway ROW or Other Real Property (23 CFR 635.410(c)(1)(vii)) and 23 CFR 635.410(c)(1)(iv)	• Certification requires for projects obligated before October 1, 2025, no certification is required (excludes EV chargers). • Certification requires for projects obligated on or after October 1, 2025, certification requires the final manufacturing process occurred in the United States (excludes EV chargers). • Certification requires for projects obligated on or after October 1, 2026, and all EV chargers , certification requires the final manufacturing process occurred in the United States and the cost of the components that are mined,

	produced, or manufactured in the United States is greater than 55 percent of the total cost of all components of the manufactured product.
Precast Concrete Products (23 CFR 635.410(c)(2)(i))	Classified as a manufactured product must comply with both the wholly or predominantly iron or steel or a combination of both product and manufactured product certification requirements as stated above.
Intelligent Transportation Systems and Other Electronic Hardware Systems Installed on the Highway ROW or Other Real Property (23 CFR 635.410(c)(2)(ii))	Classified as a manufactured product must comply with both the wholly or predominantly iron or steel or a combination of both product certification requirements for any iron or steel enclosures as well as the manufacturing certification requirements as stated above.
(4) Excluded Materials	
Excluded Materials Including Section 70917(c) Materials (23 CFR 635.410(c)(1)(ii))	No certification is required for excluded materials including Section 70917(c) materials. Section 70917(c) materials means cement and cementitious materials; aggregates such as stone, sand, or gravel; or aggregate binding agents or additives.

PART 3: DECLARATION OF SUBMITTAL

Do the articles, materials, or supplies submitted in this form comply with applicable domestic materials content procurement preferences found in the Buy America Act requirements (23 CFR 635.410) and the Build America, Buy America Act requirements (2 CFR part 184) (Y/N)? _____

PART 4: CERTIFICATION (Read and check all boxes before signing)
Note: State Departments of Transportation may have different language requirements for this section.

☐ I certify that the description above is a true and accurate description of the article, material, or supply provided, and that the undersigned is in a position to legally bind the Company/Organization represented in this form.

☐ I certify that the iron or steel product, construction material, or manufactured product complies with the applicable Buy America or BABA requirements.

Signature: Date: mm/dd/yyyy

Printed Name:
Title:
Company/Organization:
Company/Organization address:

MISSISSIPPI DEPARTMENT OF TRANSPORTATION

SUPPLEMENT TO SPECIAL PROVISION NO. 907-701-4

DATE: 11/05/2024

SUBJECT: Hydraulic Cement

907-701.04--Blended Hydraulic Cement.

907-701.04.1--Types of Blended Hydraulic Cement. After the last paragraph of Subsection 907-701.04.1 on page 1, add the following.

Blended cement Types IL meeting the "HE" high early strength requirement listed in AASHTO M 240, Table 3 shall have the "(HE)" suffix added to the type designation.

MISSISSIPPI DEPARTMENT OF TRANSPORTATION

SPECIAL PROVISION NO. 907-701-4 **CODE: (IS)**

DATE: 11/21/2023

SUBJECT: Hydraulic Cement

Section 701, Hydraulic Cement, of the 2017 Edition of the Mississippi Standard Specifications for Road and Bridge Construction is hereby amended as follows.

907-701.01--General. In the first sentence of the second paragraph of Subsection 701.01 on page 718, change "mills" to "plants."

In the second sentence of the sixth paragraph of Subsection 701.01 on pages 718 and 719, change "shall" to "will."

907-701.02--Portland Cement.

907-701.02.1-General. Delete Subsections 701.02.1.1, 701.02.1.2, 701.02.2, 701.02.2.1, and 701.02.2.2 on pages 719 and 720, and substitute the following.

907-701.02.1.1--Types of Portland Cement. Portland cement shall be either Type I, Type II, or Type III conforming to AASHTO M85 or Type III (MS). Type III (MS) is defined as a Type III cement conforming to AASHTO M85 having a maximum tricalcium aluminate (C_3A) content of 8%.

907-701.02.2--Blank.

907-701.02.2.1--Blank.

907-701.02.2.2--Blank.

Delete Subsection 701.04 on pages 720 and 721, and substitute the following.

907-701.04--Blended Hydraulic Cement.

907-701.04.1--Types of Blended Hydraulic Cement. Blended hydraulic cements (blended cements) shall be of the following types and conform to AASHTO M 240:

Type IL – Portland-limestone cement
Type IP – Portland-pozzolan cement
Type IS – Portland blast-furnace slag cement

Blended cement Types IL, IP, and IS meeting the "MS" sulfate resistance requirement listed in AASHTO M 240, Table 3 shall have the "(MS)" suffix added to the type designation.

MISSISSIPPI DEPARTMENT OF TRANSPORTATION

SPECIAL PROVISION NO. 907-702-4 **CODE: (IS)**

DATE: 09/11/2018

SUBJECT: Bituminous Materials

Section 702, Bituminous Materials, of the 2017 Edition of the Mississippi Standard Specifications for Road and Bridge Construction is hereby amended as follows.

907-702.04--Sampling. Delete the sentence in Subsection 702.04 on page 722, and substitute the following.

Sampling of bituminous materials shall be as set out in AASHTO R 66.

907-702.07--Emulsified Asphalt. Delete the last sentence in Subsection 702.07 on page 724, and substitute the following.

Asphalt for fog seal shall conform to the requirements of Subsection 907-702.12, Table V.

907-702.12--Tables. Delete Table V in Subsection 702.12 on page 729, and substitute the following.

TABLE V
SPECIFICATION FOR FOG SEAL

	LD-7		CHPF-1		
Test Requirements	**Min.**	**Max.**	**Min.**	**Max.**	**Test Method**
Viscosity, Saybolt Furol, @ 25°C, Sec.	10	100	-	100	AASHTO T 72
Storage Stability Test, 24 hr, %	-	1	-	1	AASHTO T 59
Settlement, 5 day, %	-	5	-	-	AASHTO T 59
Oil Distillate, %	-	1	-	-	AASHTO T 59
Sieve Test, % *	-	0.3	-	0.1	AASHTO T 59
Residue by Distillation, %	40	-	40	-	AASHTO T 59
Test on Residue from Distillation					
Penetration @ 25°C, 100g, 5 sec	-	20	40	90	AASHTO T 49
Softening Point, °C	65	-	-	-	ASTM D 36
Solubility in trichloroethylene, %	97.5	-	-	-	AASHTO T 44
Elastic Recovery @ 25°C, %	-	-	40	-	AASHTO T 301
Original DSR @ 82° (G*/Sinδ, 10 rad/sec)	1	-	-	-	AASHTO T 111

* The Sieve Test result is tested for reporting purposes only and may be waived if no application problems are present in the field.

MISSISSIPPI DEPARTMENT OF TRANSPORTATION

SPECIAL PROVISION NO. 907-703-2 **CODE: (SP)**

DATE: **11/29/2022**

SUBJECT: **Gradation**

Section 703, Aggregates, of the 2017 Edition of the Mississippi Standard Specifications for Road and Bridge Construction is hereby amended as follows.

907-703.03--Coarse Aggregates for Hydraulic Cement Concrete.

907-703.03.2--Detail Requirements.

907-703.03.2.4--Gradation. In the table in Subsection 703.03.2.4 on page 734, add 100 for the percent passing by weight on the 1½-inch sieve for Size No. 67 aggregates.

Delete Note 2 under the table in Subsection 703.03.2.4 on page 734, and substitute the following.

Note [2] – 100 percent shall pass the 1-inch sieve for Size 67 used in Class F and Class FX concrete.

MISSISSIPPI DEPARTMENT OF TRANSPORTATION

SPECIAL PROVISION NO. 907-705-1 **CODE: (IS)**

DATE: 06/13/2018

SUBJECT: Stone Riprap

Section 705, Stone Blanket Protection and Filter Blanket Materials, of the 2017 Edition of the Mississippi Standard Specifications for Road and Bridge Construction is hereby amended as follows.

907-705.04--Stone Riprap. Delete the last sentence of the first paragraph of Subsection 705.04 on page 750, and substitute the following.

Quality requirements for rock to be furnished under these specifications will come from a pre-approved source and be visually approved prior to use.

MISSISSIPPI DEPARTMENT OF TRANSPORTATION

SPECIAL PROVISION NO. 907-707-3 **CODE: (IS)**

DATE: **10/27/2021**

SUBJECT: **Joint Materials**

Section 707, Joint Materials, of the 2017 Edition of the Mississippi Standard Specifications for Road and Bridge Construction is hereby amended as follows.

907-707.02--Joint Filler.

907-707.02.2--Preformed Sponge, Rubber, Cork and Closed-Cell Polypropylene Foam Joint Fillers for concrete Paving and Structural Constructions. Delete the two paragraphs of Subsection 707.02.2 on page 755, and substitute the following.

Preformed joint filler shall conform to AASHTO M 153 for sponge, rubber, and cork and tested according to ASTM D545. The type required will be indicated on the plans.

Closed-cell polypropylene foam shall conform to the requirements in ASTM D8139 and tested in accordance with ASTM D545.

907-707.02.3--Wood. Delete paragraph (b) of Subsection 707.02.3 on page 755, and substitute the following:

(b) Dimensions shall be as shown on the plans Dimensions shown on the plans are "dressed" sizes in accordance with Table 3 of the American Softwood Lumber Standard, SP-20. At the discretion of the Engineer, a 3/4-inch dressed board may be used in lieu of a 1-inch dressed board. A tolerance of plus or minus 1/16 inch thickness and plus or minus 1/8 inch width will be permitted. For slip-form paving a tolerance of minus 1/4 inch on each end in length will be permitted.

907-707.06--Flexible Plastic Gasket for Joining Conduit. Delete the third paragraph of Subsection 707.06 on page 756, and substitute the following.

The Department may require the performance test described in ASTM C 990.

MISSISSIPPI DEPARTMENT OF TRANSPORTATION

SPECIAL PROVISION NO. 907-711-2 **CODE: (IS)**

DATE: 09/11/2018

SUBJECT: Plain Steel Wire

Section 711, Reinforcement and Wire Rope, of the 2017 Edition of the Mississippi Standard Specifications for Road and Bridge Construction is hereby amended as follows.

907-711.02--Deformed and Plain Carbon-Steel Bars for Concrete Reinforcing.

907-711.02.3--Steel Welded and Non-Welded Wire Reinforcement, Plain and Deformed, for Concrete.

907-711.02.3.1--Plain Steel Wire. Delete the sentence in Subsection 711.02.3.1 on pages 780 and 781, and substitute the following.

Plain steel wire and plain steel welded wire shall conform to the requirements of AASHTO M 336.

MISSISSIPPI DEPARTMENT OF TRANSPORTATION

SPECIAL PROVISION NO. 907-712-1 **CODE: (SP)**

DATE: 12/07/2021

SUBJECT: Fence and Guardrail

Section 712, Fence and Guardrail, of the 2017 Edition of the Mississippi Standard Specifications for Road and Bridge Construction is hereby amended as follows.

907-712.01--General. After the sentence in Subsection 712.01 on page 785, add the following.

All materials' inspection, testing, and certification will be performed in accordance with the requirements of the current version of the Department's *Materials Division Inspection, Testing, and Certification Manual*.

Delete Subsections 712.02 and 712.03 on page 785, and substitute the following.

907-712.02--Barbed Wire. Barbed wire shall conform to the requirements of AASHTO M 280. In the coastal counties of Hancock, Harrison, and Jackson, either Coating Type Z Class 3 or Coating Type A shall be furnished. In all other areas of the State, either Coating Type Z Class 1, Coating Type Z Class 3, Coating Type ZA Class 60, or Coating Type A shall be furnished.

907-712.03--Metallic-Coated, Steel Woven Wire Fence Fabric. Woven wire fencing (i.e., "hog wire") shall conform to the requirements of AASHTO M 279. In the coastal counties of Hancock, Harrison, and Jackson, either Coating Type Z Class 3 or Coating Type A shall be furnished. In all other areas of the State, either Coating Type Z Class 1, Coating Type Z Class 3, Coating Type ZA Class 60, or Coating Type A shall be furnished.

907-712.04--Chain Link Fence. Delete Subsections 712.04.1 thru 712.04.7 on pages 785 & 786, and substitute the following.

907-712.04.1--Fabric. In the coastal counties of Hancock, Harrison, and Jackson, either Type I Class D, Type II, Type III, or Type IV fabrics shall be furnished. In all other areas of the State, either Type I Class C, Type I Class D, Type II, Type III, or Type IV fabrics shall be furnished.

907-712.04.2--Tie Wire. Tie wire shall be of the same material as the fencing wire being used, shall be of good commercial quality, and shall meet the requirements of AASHTO M 181. Either Type I, Type II, Type III, or Type IV tie wire shall be furnished.

907-712.04.3--Tension Wire. Tension wire shall be of the same material as the fencing wire being used, shall be of good commercial quality, and shall meet the requirements of AASHTO M 181. In the coastal counties of Hancock, Harrison, and Jackson, either Type I Class 3, Type II, Type III, or Type IV tension shall be furnished. In all other areas of the State, either Type II, Type III, Type IV, or Type I Classes 1, 2, or 3 tension wires shall be furnished.

907-712.04.4--Posts Rails, Gate Frames, and Expansion Sleeves. Posts, rails, gate frames, and expansion sleeves shall conform to the requirements for posts in Subsection 712.05.2, unless otherwise designated in the contract.

907-712.04.5--Miscellaneous Fittings and Hardware. Miscellaneous fittings and hardware shall conform to the requirements of Subsection 712.16.

907-712.05--Fence Posts and Braces.

907-712.05.1--Treated Timber Posts and Braces.

907-712.05.1.1--General. Delete the third, fourth, fifth, and sixth paragraphs of Subsection 712.05.1.1 on page 787, and substitute the following.

All wood posts and braces shall be treated in accordance with Subsections 718.03 and 718.04.

907-712.05.1.2--Round Posts. Delete the last sentence of the last paragraph of Subsection 712.05.1.2 on page 788.

907-712.05.1.3--Sawed Posts. Delete the last sentence of the paragraph of Subsection 712.05.1.3 on page 788.

907-712.05.1.4--Sawed Braces. Delete the last sentence of the paragraph of Subsection 712.05.1.4 on page 788.

Delete Subsection 712.05.2 on page 788, and substitute the following.

907-712.05.2--Metal Posts.

907-712.05.2.1--Round Steel Pipe. Round steel pipe shall meet the requirements of AASHTO M 181, either Grade 1 (i.e., meeting the requirements in ASTM F 1083) or Grade 2 (i.e., meeting the requirements of ASTM F 1043).

Round steel pipe shall be sized in accordance with NPS (nominal pipe size) designations as shown on Plans, and not according to the outer or inner pipe diameter.

907-712.05.2.2--Steel Fence Post and Assemblies, Hot-Wrought. Steel posts with the following section shapes, Tee, channel or U, and Y-Bar shall meet the requirements of AASHTO M 281, galvanized in accordance with the requirements of AASHTO M 111, unless otherwise specified in the contract. Acceptance of these steel posts shall be by certification from the manufacturer, producer, supplier, or fabricator, as applicable.

907-712.05.2.3--Blank.

907-712.05.2.4--Steel H-Beam Posts. Steel H-Beam posts shall be produced from structural quality weldable steel having a minimum yield strength of 45,000 psi and shall be galvanized in accordance with ASTM A 123. Steel H-Beam line posts shall be 2.250 inches by 1.625 inches and shall weigh 3.43 pounds per foot. A tolerance of plus or minus 5.0 percent is allowed for

weight per foot. A tolerance of plus or minus 1.0 percent is allowed for dimensions.

907-712.05.2.5--Aluminum-Alloy Posts and Assemblies. Round aluminum-alloy posts shall meet the requirements of ASTM B 241, Alloy 6061, T6. Aluminum-Alloy H-Beam posts shall meet the requirements of ASTM B 221, Alloy 6061, T6.

907-712.05.2.6--Formed Steel Section Posts. Formed steel section posts, "C" sections, shall be formed from sheet steel conforming to ASTM A 1011, Grade 45, and shall be galvanized in accordance with ASTM A 123.

907-712.06--Guard and Guardrail Posts.

907-712.06.2--Treated Wood Posts.

907-712.06.2.1--Square Posts. Delete the paragraph in Subsection 712.06.2.1 on page 789, and substitute the following.

All square posts shall be inspected for conformance with Section 712.05, except that the posts may be rough and shall be within ±3/8" of the dimensions shown on the plans.

907-712.06.2.2--Round Posts. Delete the paragraph in Subsection 712.06.2.2 on page 789, and substitute the following.

All round posts shall be inspected for conformance with Section 712.05, except that the posts shall be of the shape and dimensions shown on the plans.

907-712.06.5--Treated Wood Blocks for Use with Metal Guardrail Posts. Delete the paragraphs of Subsection 712.06.5 on pages 789 & 790, and substitute the following.

Treated wood blocks for use with metal guardrail posts shall be within ±3/8" of the size and dimensions shown on the plans, except that a minus tolerance shall not be allowed for the slotted width in which the metal post must fit.

Delete Subsection 712.16 on page 791, and substitute the following.

907-712.16--Hardware. All ferrous metal hardware for fencing such as bolts, nuts, washers, and metal straps shall be as specified on the plans and galvanizing shall not be less than 1.0 ounce per square foot of uncoated area. Aluminum coated hardware shall be coated with aluminum meeting the requirements of AASHTO M 181 for aluminum coating and at the rate of not less than 0.4 ounces per square foot of uncoated area.

Aluminum alloy hardware shall conform to the requirements of ASTM B 221 for extruded aluminum alloy 6063, T6. The finished members shall be of uniform quality.

Aluminum-zinc coated hardware shall be coated with an aluminum-zinc alloy meeting the chemical requirements and weight of coating specified for aluminum-zinc alloy coated metal gates.

MISSISSIPPI DEPARTMENT OF TRANSPORTATION

SPECIAL PROVISION NO. 907-714-4 **CODE: (SP)**

DATE: **07/28/2025**

SUBJECT: **Miscellaneous Materials**

Section 714, Miscellaneous Materials, of the 2017 Edition of the Mississippi Standard Specifications for Road and Bridge Construction is hereby amended as follows.

907-714.01--Water.

907-714.01.1--General. Delete the last sentence of the second paragraph in Subsection 714.01.1 on page 794.

907-714.01.2--Water for Use in Concrete. Delete Subsection 714.01.2 on page 794, and substitute the following:

Water from municipal sources is permitted be used as mixing water in concrete, mortar, and grout without Department testing. Water from non-municipal water sources used in mixing of concrete, mortar, and grout which does not meet the requirements in Subsection 714.01.1 shall be tested for conformance as required in AASHTO M157, Table 1 and Table 2.

907-714.01.3--Water for Use in Chemically Stabilized Based. Delete the first sentence of first paragraph in Subsection 714.01.3 on page 794, and substitute the following:

Water used in the construction of bases that contain cement, lime, or other chemical additive shall be as set out in Subsection 714.01.1. Water from municipal sources is permitted to be used without testing for conformance to the requirements below. If water is not from a municipal source, it shall not contain impurities in excess of the following limits:

Delete Subsection 714.01.6 on page 795, and substitute the following.

907-714.01.6--Blank.

907-714.05--Fly Ash.

907-714.05.1--General. Delete the first sentence of the fifth paragraph in Subsection 714.05.1 on page 797.

Delete Subsection 714.06 on page 798, and substitute the following.

907-714.06--Slag Cement.

907-714.06.1--General. The slag cement source must be approved for listing in the Department's

APL prior to use. The acceptance of slag cement shall be based on certified test reports, certification of shipment from the supplier, and tests performed on samples obtained after delivery in accordance with the Department's *Materials Division Inspection, Testing, and Certification Manual* and Department SOP.

The Contractor shall provide suitable means for storing and protecting the slag cement against dampness and contamination. Separate storage silos, bins, or containers shall be provided for slag cement. Slag cement that is partially set, caked or contains lumps shall not be used.

The State Materials Engineer shall be notified in writing of the nature, amount and identity of any processing or other additions made to the slag cement during production.

Slag cement from different mills shall not be mixed or used alternately in any one class of construction or structure without written permission from the Engineer; except that this requirement will not be applicable to cement treatment of design soils or bases.

No additional cementitious materials, such as blended hydraulic cement, fly ash, metakaolin, or others, shall be added to or as a replacement for hydraulic cement when used with slag cement in the production of concrete. The replacement of hydraulic cement with slag cement shall be in accordance with the applicable replacement content specified in Subsection 701.02.2.

907-714.06.2--Specific Requirements. Slag cement shall meet the requirements of AASHTO M 302, Grade 100 or 120. Slag cement shall contain no chlorides.

907-714.13--Geotextiles.

907-714.13.11--Tables. Delete Table 1 in Subsection 714.13.11 on page 813, and substitute the following.

Table 1 - Geotextiles

Type Designation	I[1]	II[1]	III	IV	V	VI		VII		VIII	IX	
	Sediment Control		Drainage	Paving	Separation & Drainage	Separation, Stabilization & Reinforcement				High Strength		
Physical Property[2]						Woven	Non-Woven	Woven	Non-Woven			**Test Method**
Grab Strength (lb)	50	90	110	90	200	280	180	450	280	----	----	ASTM D 4632
Elongation (%)	----	50% max @ 45 lb	20% min	50% min @ break	50% min	50% max	50% Min	50% max	50% Min	----	----	ASTM D 4632
Seam Strength (lb)	----	----	70	----	180	240	160	400	240	----	----	ASTM D 4632
Puncture Strength (lb)	----	----	40	----	80	110	75	180	115	----	----	ASTM D 6241
Trapezoidal Tear (lb)	----	----	40	----	80	100	70	150	100	----	----	ASTM D 4533
Asphalt Retention (gal/yd^2)	----	----	----	0.2	----	----	----	----	----	----	----	ASTM D 6140
Permittivity (sec^{-1}) min	0.05	0.05	0.5	----	0.2	0.2	0.2	0.2	0.2	----	----	ASTM D 4491
AOS Woven (mm) max	0.60	0.60	0.6	----	0.6	0.43	----	0.43	----	----	----	ASTM D 4751
AOS Non-Woven (mm) max	0.84	0.84	0.43	----	0.43	----	0.43	----	0.43	----	----	
Tensile Strength after UV (% Retained)	70% @ 500 hr	70% @ 500 hr	50% @ 500 hr	----	50% @ 500 hr	50% @ 500 hr	50% @ 500 hr	50% @ 500 hr	50% @ 500 hr	----	----	ASTM D 4355
Melting Point °(F)	----	----	----	325	----	----	----	----	----	----	----	ASTM D 276
Minimum Ultimate Tensile Strength[3] (lb/in)	----	----	----	----	----	----	----	----	----	660	2000	ASTM D 4595

Notes: 1 - All property values, with the exception of apparent opening size (AOS), represent minimum average roll values in the weakest principal direction. Values for AOS represent the maximum average roll values, 2 - Values not identified in this table should meet manufacturer certification for the use and application, 3- Machine direction

Delete Subsec

907-714.15--Geogrids.

907-714.15.1–General. A geogrid is defined as a geosynthetic formed by a regular network of connected elements with apertures greater than 0.25 inch to allow interlocking with surrounding soil, rock, and other surrounding materials to function primarily as reinforcement.

Geogrid shall be manufactured from an expanded strain hardened monolithic polymer sheet composed of one or more synthetic polymers and shall be mildew resistant and inert to biological degradation and naturally encountered chemicals, alkalis and acids. The geogrid shall contain stabilizers and/or inhibitors, or a resistance finish or covering to make it resistant to deterioration from direct sunlight, ultraviolet rays, and heat.

Geogrid manufacturers shall participate in and be in compliance with the American Association of State Highway Transportation Officials (AASHTO) National Transportation Product Evaluation Program's (NTPEP) Geosynthetics audit program. Geogrid shall meet the requirements of Table II for the application and type shown on the plans and shall be selected from the Department's Approved Lists.

907-714.15.1.1--Geogrid for Retaining Walls and Reinforced Soil Slopes. Geogrid for retaining walls and reinforced soil slopes shall be creep tested in accordance with AASHTO R69 and meet Long Term Design Load, Minimum Ultimate Tensile Strength, and open area criteria listed in Table II. Manufacturers shall perform at least one long-term creep test for no less than 10,000 hours in accordance to ASTM D 5262 for each polymer or composition of polymers from which the geogrid is produced. The long-term design load that shall be reported for design use, shall be that load at which no more than 10% strain occurs over a 100-year design life of the geogrid, as calculated in accordance with AASHTO R69. Long-term design loads shall be reported unfactored, and the AASHTO strength reduction factors (Durability and Installation, and safety factors) will be considered by the Department's Geotechnical Branch on a site specific design basis.

907-714.15.1.2--Geogrid for Subgrade Stabilization. Geogrid for subgrade stabilization shall meet Minimum Ultimate Tensile Strength and open area criteria listed in Table II.

907-714.15.2--Marking, Shipment, and Storage. Each roll or container of geogrid shall be visibly labeled with the name of the manufacturer, trade name of the product, lot number, and quantity of material. In addition, each roll or container shall be clearly tagged to show the type designation that corresponds to that required by the plans. During shipment and storage the geogrid shall be protected from direct sunlight, and temperatures above 120°F or below 0°F. The geogrid shall either be wrapped and maintained in a heavy duty protective covering or stored in a safe enclosed area to protect from damage during prolonged storage.

907-714.15.3--Manufacturer Certification. The Contractor shall furnish the Engineer three copies of the manufacturer's certified test reports indicating that the geogrid furnished conforms to the requirements of the specifications and is of the same composition as the originally approved by the Department.

907-714.15.4--Acceptance Sampling and Testing. Final acceptance of each shipment will be

based upon results of tests performed by the Department on verification samples submitted from the project, as compared to the manufacturer's certified test reports. The Engineer will select one roll or container at random from each shipment for sampling. As sample extending full width of the randomly selected roll or container and being at least five (5) square yards in area will be obtained and submitted by the Engineer. All material samples shall be provided at no cost to the State.

TABLE II
GEOGRIDS

Physical Properties	Type Designation						Test Method
	I	II	III	IV	V	VI	
Long Term Design Load[1], pounds per foot, Machine Direction	250	500	750	1500	2500	3500	AASHTO R69, ASTM D5262
Minimum Ultimate Tensile Strength[2], pounds per foot, Machine Direction	500	1000	1500	3000	5000	7000	ASTM D6637
Open Area, percent	70	70	50	50	50	50	Direct Measurement

[1] Minimum design criteria requirement.
[2] Minimum Average Roll Value (MARV).

MISSISSIPPI DEPARTMENT OF TRANSPORTATION

SPECIAL PROVISION NO. 907-718-1 **CODE: (SP)**

DATE: 12/07/2021

SUBJECT: Timber and Dimension Lumber

Section 718, Timber and Dimension Lumber, of the 2017 Edition of the Mississippi Standard Specifications for Road and Bridge Construction is hereby amended as follows.

Delete the Subsections in Section 718 on pages 836 thru 838, and substitute the following.

907-718.01--General. All timber and dimension lumber shall be Southern pine and shall conform in all respects to applicable requirements of AASHTO M 168. The Department reserves the right to sample and to test all materials at any time; all inspection, testing, and certification of materials will be performed in accordance with the requirements of the current version of the Department's *Materials Division Inspection, Testing, and Certification Manual*.

Timber and dimension lumber shall be furnished in the sizes shown on the plans or as specified. Unless otherwise specified, timber and dimension lumber shall be No. 1, or better, graded according to the latest American Lumber Standards.

Only one type of preservative shall be used for the treatment of materials for any one class of construction on a project, unless otherwise specified.

Where treated timber and dimensional lumber is to be used in non-highway construction or use, such as decking, handrails in walking trails, or in any manner where general public exposure by touch is possible, the treatment requirements will be as per project plans and/or approved by the State Materials Engineer.

907-718.02--Untreated Timber and Dimension Lumber. Untreated timber and dimension lumber shall conform to the requirements of AASHTO M 168.

907-718.03--Treated Timber and Dimension Lumber. Timber and dimension lumber to be treated shall meet the requirements herein specified and shall be treated as specified. Treated timber or dimensional lumber will not be accepted for use unless it has been inspected by an authorized representative of the Department and found to be satisfactory after treatment.

907-718.03.1--Blank.

907-718.03.2--Treatment.

907-718.03.2.1--General. All materials shall be treated in accordance with AASHTO M 133 unless otherwise directed by the Environmental Protection Agency (EPA).

907-718.03.2.2--Blank.

907-718.03.2.3--Inspection. Treated timber and dimension lumber shall be inspected by an authorized representative of the Department before being incorporated into the work. Treatment reports shall be provided to the Department for each lot of material supplied.

907-718.03.3--Blank.

907-718.03.4--Storage of Treated Material. All material treated for stock shall be stacked as compactly as possible on a well-drained surface. Material shall be supported on sills spaced as necessary, not to exceed 10 foot intervals and shall have at least one foot of air space beneath the stacks.

All materials treated with preservatives for use in buildings and applications where painting is required shall be dried after treatment. The treated wood shall be dried in accordance with American Lumber Standards.

907-718.04--Preservative. Preservatives shall be as specified in AASHTO M 133 unless otherwise directed by the Environmental Protection Agency (EPA).

MISSISSIPPI DEPARTMENT OF TRANSPORTATION

SPECIAL PROVISION NO. 907-720-4 **CODE: (IS)**

DATE: **06/17/2025**

SUBJECT: **Pavement Marking Materials**

Section 720, Pavement Marking Materials, of the 2017 Edition of the Mississippi Standard Specifications for Road and Bridge Construction is hereby amended as follows.

Delete Section 720 on pages 840 thru 854, and substitute the following.

SECTION 720 - PAVEMENT MARKING MATERIALS

907-720.01--General. The Department reserves the right to perform sampling and testing of any materials at any time. Upon request of the Engineer, samples of the material shall be furnished.

907-720.02--Color Requirements. All pavement markings except raised pavement markers are required to meet the color requirements of ASTM D6628.

907-720.03--Optics. Optics used in thermoplastic pavement markings shall consist of a double-drop system of glass beads or advanced optics.

907-720.03.1--Glass Beads. The manufacturer shall furnish the Engineer with a certified test report indicating that the glass beads meet AASHTO M 247. AASHTO Type 4 beads shall be applied to the newly placed stripe first, followed by the application of AASHTO Type 1 or Type 2 beads. Type 1, 2, and 4 glass beads shall be transparent, clean, colorless glass, smooth and spherically shaped, free from milkiness, pits, or excessive air bubbles. Type 1, 2, and 4 glass beads shall be coated with a bead coating that is compatible with the traffic marking material to which the glass beads will be applied and will provide adequate moisture proofing, increased adhesion, and optimum embedment of the glass beads.

907-720.03.1.1—Acceptance Procedure. The Contractor shall furnish the Engineer with a copy of the manufacturer's certified test reports for the lot(s) of materials from which the shipment originated. The test report shall show all the test results for the material properties and characteristics as specified herein. The test report shall state that the material represented by the test results meets all the requirements of the contract. It shall be the Contractor's responsibility to furnish the manufacturer's test report to the Engineer for each shipment of material to the project.

Acceptance sampling and testing will be in accordance with the Materials Division Inspection, Testing, and Certification Manual (Materials Manual).

907-720.03.2--Advanced Optics. Advanced optics are materials that do not meet the specific requirements of AASHTO M 247 but produce a final drop-on optics system that meets or exceeds the reflectivity requirements in Special Provision 907-626. Advanced optics shall be a double-

drop system that is pre-approved and listed on the Department's Approved Products List.

907-720.03.2.1—Acceptance Procedure. The Contractor shall furnish the Engineer with a copy of the manufacturer's certified test reports for the lot(s) of materials from which the shipment originated. The test report shall show all the test results for the material properties and characteristics as specified herein. The test report shall state that the material represented by the test results meets all the requirements of the contract. It shall be the Contractor's responsibility to furnish the manufacturer's test report to the Engineer for each shipment of material to the project.

Acceptance sampling and testing may be conducted at the request of the Engineer.

907-720.04--Thermoplastic Marking Material. Thermoplastic marking material shall meet the color requirements of Subsection 907-720.02.

There shall be no obvious change in the color of the material if held at its plastic temperature for a period of four (4) hours nor by reason of four (4) re-heatings to its plastic temperature.

The pavement markings shall maintain its original dimension and placement. The material shall not be slippery when wet and it shall not lift from the pavement in freezing weather.

907-720.04.1--Extruded Thermoplastic Material. Extruded thermoplastic pavement marking material shall meet the requirements of AASHTO M 249, and shall meet the requirements of 907-720.04 with the following exceptions:

- Blue - ADA thermoplastic marking material shall meet the requirements of Subsection 907-720.04.2 with the exception that the color shall be Blue – ADA, and the Contractor may use hot applied thermoplastic materials meeting the satisfaction of the Engineer.

907-720.04.2--Spray-Applied Thermoplastic Material. Spray-applied thermoplastic pavement marking material shall meet the requirements of AASHTO M 249 and shall meet the requirements of 907-720.04.

907-720.04.3--Pre-formed Thermoplastic Material. Heat-fused, pre-formed thermoplastic pavement marking material shall meet the color requirements of 907-720.02.

907-720.04.4—Acceptance Procedure. The Contractor shall furnish the Engineer with a copy of the manufacturer's certified test reports for the lot(s) of materials from which the shipment originated. The test report shall show all the test results for the material properties and characteristics as specified herein. The test report shall state that the material represented by the test results meets all the requirements of the contract. It shall be the Contractor's responsibility to furnish the manufacturer's test report to the Engineer for each shipment of material to the project.

907-720.05--Pavement Marking Tape. Pavement marking tape shall be listed on the Department's Approved Lists.

907-720.05.1—Cold Plastic Pavement Markings (Permanent Pavement Marking Tape). Pavement marking tape for use in roadway applications shall be designated on the Department's Approved Lists as permanent.

The prefabricated markings described shall consist of white or yellow pigmented plastic films with reflective optics uniformly distributed throughout their entire cross-sectional area, and be capable of being affixed by either a pressure sensitive pre-coated adhesive or a liquid contact cement. The markings shall be provided complete in a form that will facilitate rapid application and protect the markings in shipment and storage. The manufacturer shall identify proper solvents and/or adhesives to be applied at the time of application, all equipment necessary for proper application, and recommendations for application that will assure an effective performance life.

Prefabricated legends and symbols shall conform to the applicable shapes and sizes as outlined in the current "Manual on Uniform Traffic Control Devices."

907-720.05.1.1--Specific Requirements. Unless otherwise indicated on the plans, the patterned material without adhesive shall have a minimum caliper of 0.065 inch at the thickest portion of the patterned cross-section and a minimum caliper of 0.020 inch at the thinnest portion of the cross-section. The material shall be a pliant polymer film with 50±15% of the surface are raised and presenting a near vertical face angle of 0° to 60° to traffic from any direction. The channels between the raised areas shall be substantially free of exposed optics or particles.

The size and quality of the optics will be such that performance requirements of Subsection 907-720.02 for the retroreflective pliant polymer film shall be met. The pigments shall be selected and blended to provide a marking film that is white or yellow conforming to the performance requirements of Subsection 907-720.02 through the expected life of the film.

907-720.05.1.2--Conformability and Resealing. The marking shall be capable of conforming to pavement contours, breaks, faults, etc. through the action of traffic at normal pavement temperatures.

The marking shall have resealing characteristics that allows it to be capable of fusing with itself and previously applied marking of the same composition under normal conditions of use. The marking shall be capable of use for patching worn areas of the same type in accordance with manufacturer's instructions.

907-720.05.1.3--Tensile Strength and Elongation. The material shall have a minimum tensile strength of 40 pounds per square inch of cross section when tested according to ASTM D 638. A 6-inch x 1-inch x 0.06-inch sample shall be tested at a temperature between 70°F and 80°F using a jaw speed of 12 inches per minute.

The material shall have a minimum elongation of 75% at break when tested according to ASTM D 638 using a jaw speed of 12 inches per minute.

907-720.05.1.4--Skid Resistance. The surface of the material shall provide a minimum skid resistance value of 45 BPN when tested according to ASTM E 303 except values will be taken at

downweb and at a 45-degree angle from downweb. These two values will then be averaged to find the skid resistance of the patterned surface.

907-720.05.1.5--Effective Performance Life and Warranty. When applied according to the recommendations of the manufacturer the pavement marking tape shall provide a neat and durable marking that will not flow or distort due to temperature if the pavement surface remains stable. The film shall be weather resistant and through normal traffic wear shall show no appreciable fading, lifting, or shrinkage throughout the useful life of the marking, nor shall it show significant tearing, roll back, or other signs of poor adhesion.

All manufacturer's standard warranties and guarantees on pavement marking tape, which are provided as customary trade practice, shall be delivered to the Engineer at the final inspection. All warranties and guarantees shall be made out to the Department.

907-720.05.1.6—Acceptance Procedure. The Contractor shall furnish the Engineer with a copy of the manufacturer's certified test reports for the lot(s) of materials from which the shipment originated. The test report shall show all the test results for the material properties and characteristics as specified herein. The test report shall state that the material represented by the test results meets all the requirements of the contract. It shall be the Contractor's responsibility to furnish the manufacturer's test report to the Engineer for each shipment of material to the project.

Acceptance sampling and testing will be in accordance with the Materials Division Inspection, Testing, and Certification Manual (Materials Manual). Samples of the material shall be furnished and shall be provided at no cost to the State.

907-720.05.2--Preformed Pavement Markings for Construction Zones. Preformed pavement markings for construction zones shall be designated Department's Approved Lists as temporary. Retroreflective preformed pavement markings for construction zones shall be as specified on the plans or in the contract documents.

The markings shall be provided in specified widths and shapes. Preformed words and symbols shall conform to the applicable shapes and sizes as outlined in the current "Manual on Uniform Traffic Control Devices for Streets and Highways," or as modified.

The materials shall be packaged in accordance with accepted commercial standards and when stored indoors in a cool dry place, shall be suitable for use one year after date of purchase.

907-720.05.2.1--Specific Requirements. Preformed markings shall consist of retroreflective materials on a conformable backing and shall meet the performance requirements of Subsection 907-720.02. The markings shall consist of a mixture of high-quality polymeric materials, pigments, and optics with a reflective layer of optics bonded to the top surface. The markings shall be pre-coated with a pressure sensitive adhesive capable of adhering to pavement in accordance with the manufacturer's instructions without the use of heat, solvents, or other additional adhesives. The markings and/or adhesive shall not require any curing time after application. A coated non-metallic medium shall be incorporated with the pressure sensitive adhesive to facilitate removal.

907-720.05.2.2—Acceptance Procedure. The Contractor shall furnish the Engineer with a copy of the manufacturer's certified test reports for the lot(s) of materials from which the shipment originated. The test report shall show all the test results for the material properties and characteristics as specified herein. The test report shall state that the material represented by the test results meets all the requirements of the contract. It shall be the Contractor's responsibility to furnish the manufacturer's test report to the Engineer for each shipment of material to the project.

907-720.06--Raised Pavement Markers. Pavement markers shall be listed on the Department's Approved Lists and shall conform to ASTM D 4280.

907-720.06.1--Packaging. Shipments shall be made in containers acceptable to common carriers and packaged in such a manner as to ensure delivery in perfect condition. All damaged shipments shall be replaced by the Contractor. Each package shall be clearly marked as to the name of the manufacturer, type, quantity enclosed, lot number, and date of manufacture.

907-720.06.2--Non-Reflective Pavement Markers. Non-reflective pavement markers are occasionally referred to as "jiggle markers". Non-reflective markers consisting of a heat-fired, vitreous, ceramic base, and a heat-fired, opaque, glazed surface are permitted for use; the bottom of the marker shall not be glazed. Ceramic markers shall be produced from any suitable combination of intimately mixed clays, shales, talcs, flints, feldspars, or other inorganic material. Ceramic markers shall be thoroughly and evenly matured, and all non-reflective pavement markers shall be free from defects which affect appearance or serviceability.

Ceramic non-reflective markers shall conform to the following finish and testing requirements in Table 2 below.

Table 2

Ceramic Non-Reflective Marker Requirements	
Glaze Thickness	0.005 inch, minimum
Mohs Hardness	6, minimum
Autoclave	Glaze shall not spall, craze, or peel.
Compressive Strength	750 psi, minimum
Water Absorption	2.0%, maximum

907-720.06.3—Acceptance Procedure. The Contractor shall furnish the Engineer with a copy of the manufacturer's certified test reports for the lot(s) of materials from which the shipment originated. The test report shall show all the test results for the material properties and characteristics as specified herein. The test report shall state that the material represented by the test results meets all the requirements of the contract. It shall be the Contractor's responsibility to furnish the manufacturer's test report to the Engineer for each shipment of material to the project.

907-720.07--Adhesive for Pavement Markers. The adhesive shall be listed on the Department's Approved Lists and shall be an asphaltic material suitable for bonding pavement markers to surfaces when the road surface and marker temperatures are in the range of 50°F to 160°F. The composition of the adhesive must be such that its properties will not deteriorate when heated to and applied at temperatures up to 425°F. Samples may be submitted in the form of an adhesive

testing package from each batch or material obtained from a package shipped to the project.

907-720.07.1--Packaging and Labeling. The adhesive shall be packaged in self-releasing cardboard containers that will stack properly. The label shall show the manufacturer, quantity, and lot or batch number. "Adhesive for Pavement Markers" or "Adhesive for Traffic Markers" shall be printed in bold lettering on the label.

907-720.07.2--Bituminous Adhesive. The asphaltic adhesive material shall be flexible type.

907-720.07.2.1--Flexible Bituminous Adhesive. Flexible bituminous adhesive shall be designated on the Department's Approved Lists as flexible and shall comply with requirements of Table 3 below.

Table 3

Flexible Bituminous Adhesive Properties			
	Min	Max	Test Method
Penetration @ 77°F	-	25	ASTM D 5
Softening Point, °F	200	-	ASTM D 36
Brookfield Viscosity @ 400°F, cp.	-	10,000	ASTM D 3236
Ductility @ 77°F, 5 cm/min	15	-	ASTM D 113
Ductility @ 39.2°F, 1 cm/min	5	-	ASTM D 113
Asphalt Compatibility	Pass		ASTM D 5329
Flexibility @ 20°F	Pass		Per Subsection

907-720.07.3—Acceptance Procedure. The Contractor shall furnish the Engineer with a copy of the manufacturer's certified test reports for the lot(s) of materials from which the shipment originated. The test report shall show all the test results for the material properties and characteristics as specified herein. The test report shall state that the material represented by the test results meets all the requirements of the contract. It shall be the Contractor's responsibility to furnish the manufacturer's test report to the Engineer for each shipment of material to the project.

Acceptance sampling and testing will be in accordance with the Materials Division Inspection, Testing, and Certification Manual (Materials Manual). Samples of the material shall be furnished and shall be provided at no cost to the State.

MISSISSIPPI DEPARTMENT OF TRANSPORTATION

SPECIAL PROVISION NO. 907-721-4 **CODE: (IS)**

DATE: **04/19/2022**

SUBJECT: **Materials for Signing**

Section 721, Materials for Signing, of the 2017 Edition of the Mississippi Standard Specifications for Road and Bridge Construction is hereby amended as follows.

907-721.06--Reflective Sheeting.

907-721.06.2--Performance Requirements. Delete Table 4 and Table 5 in Subsection 721.06.2 on pages 860 & 861, and substitute the following.

MINIMUM COEFFICIENTS OF RETROREFLECTION
Candela per foot candle per square foot (cd/fc/ft^2)
Per ASTM Designation D4956

TABLE 4
Type IX Sheeting

Observation Angle	Entrance Angle	White	Yellow	Green	Red	Blue	Fluorescent Yellow/Green	Fluorescent Yellow	Fluorescent Orange
0.2°	-4.0°	380	285	38	76	17	300	230	115
0.2°	+30.0°	215	162	22	43	10	170	130	65
0.5°	-4.0°	240	180	24	48	11	190	145	72
0.5°	+30.0°	135	100	14	27	6.0	110	81	41
1.0°	-4.0°	80	60	8.0	16	3.6	64	48	24
1.0°	+30.0°	45	34	4.5	9.0	2.0	36	27	14

TABLE 5
Type XI Sheeting

Observation Angle	Entrance Angle	White	Yellow	Green	Red	Blue	Brown	Fluorescent Yellow/Green	Fluorescent Yellow	Fluorescent Orange
0.2°	-4.0°	580	435	58	87	26	17	460	350	175
0.2°	+30.0°	220	165	22	33	10	7.0	180	130	66
0.5°	-4.0°	420	315	42	63	19	13	340	250	125
0.5°	+30.0°	150	110	15	23	7.0	5.0	120	90	45
1.0°	-4.0°	120	90	12	18	5.0	4.0	96	72	36
1.0°	+30.0°	45	34	5.0	7.0	2.0	1.0	36	27	14

After Subsection 721.10 on page 864, add the following.

907-721.11--Digital Applied Printing. The following addresses the requirements for digitally printed finished retroreflective traffic control signs on flat sheet aluminum and digitally printed traffic sign faces intended to be applied to a sign substrate.

907-721.11.1--Digitally Printed Ink Systems. Traffic signs must be produced using components, and processes that comply with the retroreflective sheeting manufacturer's recommendations.

Digital printed ink systems used to print traffic signs must meet and comply with daytime and nighttime chromaticity (color standards) as recognized in ASTM D4956 "Standard Specification for Retroreflective Sheeting for Traffic Control."

Digital printed ink systems must meet 70% of the initial retroreflectivity specifications of each respective reflective film color as found in ASTM D4956 "Standard Specification for Retroreflective Sheeting for Traffic Control."

Prior to fabrication and preferably at the preconstruction meeting, the Contractor shall advise the Project Engineer in writing as to which signs on the project will be digitally printed and which ones will be screen printed. The Contractor shall submit to the Project Engineer certifications for all digitally printed signs, which will be forwarded to the State Traffic Engineer for review.

907-721.11.2--Protective Overlay Film. Permanent traffic signs printed with digital ink systems will be fabricated with a full sign protective overlay film designed to provide a smooth surface needed for retroreflectivity, and to protect the sign from fading and UV degradation. The overlaminate shall comply with the retroreflective sheeting manufacturer's recommendations to ensure proper adhesion and transparency and will also meet the reflective film durability as identified in Table 1.

Table 1
Retroreflective Film Minimum Durability Requirements

ASTM D4956 Type	Full Sign Replacement Term (years)	Sheeting Replacement Term (years)
IV	7	10
VIII	7	10
IX	7	12
XI	7	12

Temporary signs used in work zones printed with black ink only will not require a protective overlay film as long as the finished sign is warranted for a minimum outdoor durability of three years by the sheeting manufacturer.

907-721.11.3--Inspection. During fabrication, the Contractor shall provide sufficient testing and quality control throughout fabrication to insure good workmanship. Once the material has been received, it may be subject to random testing to ensure compliance with all requirements. If any test samples do not conform to the requirements, the entire order may be returned at the vendor's expense.

907-721.11.4--Traffic Sign Performance Warranty Provisions. Based on the ASTM Type of sheeting specified, traffic control signs shall be warranted for the duration shown in Table 1. The Contractor shall supply a copy of the warranty document with complete details of terms and conditions upon request of the Department.

907-721.11.5--Certified Digital Sign Fabricator. Sign fabricators using digital imaging methods to produce regulated traffic signs must be certified by the reflective sheeting manufacturer whose materials are used to produce the delivered signs.

Certified sign fabricators must undergo an audit process by the sheeting manufacturer to ensure they have the proper equipment, manufacturing capabilities, manufacturing application processes and the materials required to fulfill the sheeting manufacturer's warranty obligations. Sign fabricators must recertify annually with reflective sheeting manufacturers or utilize a 3rd party certifier approved by the reflective sheeting manufacturer.

The Contractor shall submit proof of Sign Fabricator Certification as issued by the retroreflective sign sheeting manufacturer to the Project Engineer upon delivery of the signs, or with the Shop Drawings.

S E C T I O N 9 0 5 - P R O P O S A L

Date _____

Mississippi Transportation Commission
Jackson, Mississippi

Sirs: The following proposal is made on behalf of _____
_____ of _____
_____
for constructing the following designated project(s) within the time(s) hereinafter specified.

The plans are composed of drawings and blue prints on file in the offices of the Mississippi Department of Transportation, Jackson, Mississippi.

The Specifications are the current Standard Specifications of the Mississippi Department of Transportation approved by the Federal Highway Administration, except where superseded or amended by the plans, Special Provisions and Notice(s) to Bidders attached hereto and made a part thereof.

I (We) certify that I (we) possess a copy of said Standard and any Supplemental Specifications.

Evidence of my (our) authority to submit the Proposal is hereby furnished. The proposal is made without collusion on the part of any person, firm or corporation. I (We) certify that I (we) have carefully examined the Plans, the Specifications, including the Special Provisions and Notice(s) to Bidders, herein, and have personally examined the site of the work. On the basis of the Specifications, Special Provisions, Notice(s) to Bidders, and Plans, I (we) propose to furnish all necessary machinery, tools, apparatus and other means of construction and do all the work and furnish all the materials in the manner specified. I (We) understand that the quantities mentioned herein are approximate only and are subject to either increase or decrease, and hereby propose to perform any increased or decreased quantities of work at the unit prices bid, in accordance with the above.

I (We) acknowledge that this proposal will be found irregular and/or non-responsive unless a certified check, cashier's check, or Proposal Guaranty Bond in the amount as required in the Advertisement (or, by law) is submitted electronically with the proposal or is delivered to the Contract Administration Engineer prior to the bid opening time specified in the advertisement.

INSTRUCTION TO BIDDERS: Alternate and Optional Items on Bid Schedule.

1. Two or more items entered opposite a single unit quantity WITHOUT DEFINITE DESIGNATION AS "ALTERNATE ITEMS" are considered as "OPTIONAL ITEMS". Bidders may or may not indicate on bids the Optional Item proposed to be furnished or performed WITHOUT PREJUDICE IN REGARD TO IRREGULARITY OF BIDS.
2. Items classified on the bid schedule as "ALTERNATE ITEMS" and/or "ALTERNATE TYPES OF CONSTRUCTION" must be preselected and indicated on bids. However, "Alternate Types of Construction" may include Optional Items to be treated as set out in Paragraph 1, above.
3. Optional items not preselected and indicated on the bid schedule MUST be designated in accordance with Subsection 102.06 prior to or at the time of execution of the contract.
4. Optional and Alternate items designated must be used throughout the project.

I (We) further propose to perform all "force account or extra work" that may be required of me (us) on the basis provided in the Specifications and to give such work my (our) personal attention in order to see that it is economically performed.

I (We) further propose to execute the attached contract agreement (Section 902) as soon as the work is awarded to me (us), and to begin and complete the work within the time limit(s) provided for in the Specifications and Advertisement. I (We) also propose to execute the attached contract bond (Section 903) in an amount not less than one hundred (100) percent of the total of my (our) part, but also to guarantee the excellence of both workmanship and materials until the work is finally accepted.

I (We) shall submit electronically with our proposal or deliver prior to the bid opening time a certified check, cashier's check or bid bond for **five percent (5%) of total bid** and hereby agree that in case of my (our) failure to execute the contract and furnish bond within Ten (10) days after notice of award, the amount of this check (bid bond) will be forfeited to the State of Mississippi as liquidated damages arising out of my (our) failure to execute the contract as proposed. It is understood that in case I am (we are) not awarded the work, the check will be returned as provided in the Specifications.

For Informational Purposes Only

SECTION 905 -- PROPOSAL (CONTINUED)

I (We) hereby certify by digital signature and electronic submission via Bid Express of the Section 905 proposal below, that all certifications, disclosures and affidavits incorporated herein are deemed to be duly executed in the aggregate, fully enforceable and binding upon delivery of the bid proposal. I (We) further acknowledge that this certification shall not extend to the bid bond or alternate security which must be separately executed for the benefit of the Commission. This signature does not cure deficiencies in any required certifications, disclosures and/or affidavits. I (We) also acknowledge the right of the Commission to require full and final execution on any certification, disclosure or affidavit contained in the proposal at the Commission's election upon award. Failure to so execute at the Commission's request within the time allowed in the Standard Specifications for execution of all contract documents will result in forfeiture of the bid bond or alternate security.

Respectfully Submitted,

DATE _____

_____
Contractor

BY _____
Signature

TITLE _____

ADDRESS _____

CITY, STATE, ZIP _____

PHONE _____

FAX _____

E-MAIL _____

(To be filled in if a corporation)

Our corporation is chartered under the Laws of the State of _____ and the names, titles and business addresses of the executives are as follows:

_____
President Address

_____
Secretary Address

_____
Treasurer Address

The following is my (our) itemized proposal.

For Informational Purposes Only

Storm Damage Repairs on SR 589 and US 49, known as Federal Aid Project Nos. ER-0240-00(021) / 110299301, ER-0008-02(137) / 110300302, ER-0008-02(139) / 110377301 & ER-0008-02(138) / 110378301 in Covington County.

Line no.	Item Code	Adj Code	Quantity	Units	Description[Fixed Unit Price]
				Roadway Items	
0010	202-B006		222	Square Yard	Removal of Asphalt Paved Shoulders, All Depths
0020	202-B063		165	Square Yard	Removal of Concrete Paved Ditch
0030	202-B158		500	Linear Feet	Removal of Guard Rail, Including Rails, Posts and Terminal Ends
0040	203-EX041	(E)	295	Cubic Yard	Borrow Excavation, AH, LVM, Class B9-6
0050	203-G002	(E)	370	Cubic Yard	Excess Excavation, LVM, AH
0060	209-A005		222	Square Yard	Geotextile Stabilization, Type V, Non-Woven
0070	216-A001		1,000	Square Yard	Solid Sodding
0080	221-A001	(S)	38	Cubic Yard	Concrete Paved Ditch
0090	304-H002	(GY)	155	Cubic Yard	Size 610 Crushed Stone Base, LVM
0100	503-C010		550	Linear Feet	Saw Cut, Full Depth
0110	605-AA001	(S)	135	Square Yard	Geotextile for Subsurface Drainage, Type III
0120	605-W002	(GY)	100	Cubic Yard	Filter Material for Combination Storm Drain and/or Underdrains,Type B, FM
0130	606-B001		500	Linear Feet	Guard Rail, Class A, Type 1
0140	606-E007		4	Each	Guard Rail, Terminal End Section, Non-Flared
0150	618-B001		4	Square Feet	Additional Construction Signs ($10.00)
0160	620-A001		1	Lump Sum	Mobilization
0170	630-F006		20	Each	Delineators, Guard Rail, White
0180	815-A007	(S)	903	Ton	Loose Riprap, Size 300
0190	815-E001	(S)	1,097	Square Yard	Geotextile under Riprap
0200	907-618-A001		1	Lump Sum	Maintenance of Traffic

For Informational Purposes Only

CONDITIONS FOR COMBINATION BID

If a bidder elects to submit a combined bid for two or more of the contracts listed for this month's letting, the bidder must complete and execute these sheets of the proposal in each of the individual proposals to constitute a combination bid. In addition to this requirement, each individual contract shall be completed, executed and submitted in the usual specified manner.

Failure to execute this Combination Bid Proposal in each of the contracts combined will be just cause for each proposal to be received and evaluated as a separate bid.

It is understood that the Mississippi Transportation Commission not only reserves the right to reject any and all proposals, but also the right to award contracts upon the basis of lowest separate bids or combination bids most advantageous to the State.

It is further understood and agreed that the Combination Bid Proposal is for comparison of bids only and that each contract shall operate in every respect as a separate contract in accordance with its proposal and contract documents.

I (We) agree to complete each contract on or before its specified completion date.

* * * *

SECTION 905 - COMBINATION BID PROPOSAL (Continued)

Project Number	Pay Item Number	Unit	Unit Price Reduction	Total Item Reduction	Total Contract Reduction
1. _____	_____	_____	_____	_____	
2. _____	_____	_____	_____	_____	
3. _____	_____	_____	_____	_____	
4. _____	_____	_____	_____	_____	
5. _____	_____	_____	_____	_____	
6. _____	_____	_____	_____	_____	
7. _____	_____	_____	_____	_____	
8. _____	_____	_____	_____	_____	

For Informational Purposes Only

Project Number	Pay Item Number	Unit	Unit Price Reduction	Total Item Reduction	Total Contract Reduction
9. _____	_____ _____	_____ _____	_____ _____	_____ _____	
10. _____	_____ _____	_____ _____	_____ _____	_____ _____	

(c) If Combination C has been selected, then initial and complete ONE of the following.

_____ I (We) desire to be awarded work not to exceed a total monetary value of $ _____.

_____ I (We) desire to be awarded work not to exceed _____ number of contracts.

For Informational Purposes Only

Certification with regard to the Performance of Previous Contracts or Subcontracts subject to the Equal Opportunity Clause and the filing of Required Reports

The Bidder hereby certifies that he has ___, has not ___, participated in a previous contract or subcontract subject to the Equal Opportunity Clause, as required by Executive Orders 10925, or 11114, and that he has ___, has not ___, filed with the Joint Reporting Committee, the Director of the Office of Federal Contract Compliance, a Federal Government contracting or administering agency, or the former President's Committee on Equal Employment Opportunity, all reports due under the applicable filing requirements.

_____
(COMPANY)

DATE: _____

NOTE: The above certification is required by the Equal Employment Opportunity Regulations of the Secretary of Labor (41 CFR 60-1.7 (b) (1)), and must be submitted by bidders and proposed subcontractors only in connection with contracts and subcontracts which are subject to the Equal Opportunity Clause. Contracts and Subcontracts which are exempt from the Equal Opportunity Clause are set forth in 41 CFR 60-1.5. (Generally only contracts or subcontracts of $10,000 or under are exempt.)

Currently, Standard Form 100 (EE0-1) is the only report required by the Executive Orders or their implementing regulations.

Proposed prime Contractors and Subcontractors who have participated in a previous contract or subcontract subject to the Executive orders and have not filed the required reports should note that 41 CFR 60-1.7 (b) (1) prevents the award of contracts and subcontracts unless such Contractors submit a report covering the delinquent period or such other period specified by the Federal Highway Administration or by the Director, Office of Federal Contract Compliance, U. S. Department of Labor.

For Informational Purposes Only

MISSISSIPPI DEPARTMENT OF TRANSPORTATION

CERTIFICATION

I,_____,
(Name of person signing bid)

individually, and in my capacity as_____ of
(Title of person signing bid)

_____do hereby certify under
(Name of Firm, partnership, or Corporation)

penalty of perjury under the laws of the United States and the State of Mississippi that_____

_____, Bidder
(Name of Firm, Partnership, or Corporation)

on Project No. **ER-0240-00(021)/ 110299301000, ER-0008-02(137)/ 110300302000, ER-0008-02(139)/ 110377301000 & ER-0008-02(138)/ 110378301000**

in **Covington** County(ies), Mississippi, has not either

directly or indirectly entered into any agreement, participated in any collusion; or otherwise taken any action in restraint of free competitive bidding in connection with this contract; nor have any of its corporate officers or principal owners.

Except as noted hereafter, it is further certified that said legal entity and its corporate officers, principal owners, managers, auditors and others in a position of administering federal funds:

a) Are not presently debarred, suspended, proposed for debarment, declared ineligible, or voluntarily excluded from covered transactions by any Federal department or agency;

b) Have not within a three-year period preceding this proposal been convicted of or had a civil judgment rendered against them for commission of fraud or a criminal offense in connection with obtaining, attempting to obtain, or performing a public (Federal, State or local) transaction or contract under a public transaction; violation of Federal or State antitrust statutes or commission of embezzlement, theft, forgery, bribery, falsification or destruction of records, making false statements, or receiving stolen property;

c) Are not presently indicted for or otherwise criminally or civilly charged by a governmental entity (Federal, State or local) with commission of any of the offenses enumerated in (b) above; and

d) Have not within a three-year period preceding this application/ proposal had one or more public transactions (Federal, State or local) terminated for cause or default.

Do exceptions exist and are made a part thereof? Yes / No

Any exceptions shall address to whom it applies, initiating agency and dates of such action.

For Informational Purposes Only

Note: Exceptions will not necessarily result in denial of award but will be considered in determining bidder responsibility. Providing false information may result in criminal prosecution or administrative sanctions.

The bidder further certifies that the certification requirements contained in Section XI of Form FHWA 1273, will be or have been included in all subcontracts, material supply agreements, purchase orders, etc. except those procurement contracts for goods or services that are expected to be less than the Federal procurement small purchase threshold fixed at 10 U.S.C. 2304(g) and 41 U.S.C. 253(g) (currently $25,000) which are excluded from the certification requirements.

The bidder further certifies, to the best of his or her knowledge and belief, that:

1) No Federal appropriated funds have been paid or will be paid to any person for influencing or attempting to influence an officer or employee of any Federal agency, a Member of Congress, an officer or employee of Congress, or an employee of a Member of Congress in connection with the awarding of any Federal contract, the making of any Federal grant, the making of any Federal loan, the entering into of any cooperative agreement, and the extension, continuation, renewal, amendment, or modification of any Federal contract, grant, loan, or cooperative agreement.

2) If any funds other than Federal appropriated funds have been paid or will be paid to any person for influencing or attempting to influence an officer or employee of any Federal agency, a Member of Congress, an officer or employee of Congress, or an employee of a Member of Congress in connection with this contract, Standard Form-LLL, Disclosure Form to Report Lobbying, in accordance with its instructions will be completed and submitted.

The certification contained in (1) and (2) above is a material representation of fact upon which reliance is placed and a prerequisite imposed by Section 1352, Title 31, U.S. Code prior to entering into this contract. Failure to comply shall be subject to a civil penalty of not less than $10,000 and not more than $100,000. The bidder shall include the language of the certification in all subcontracts exceeding $100,000 and all subcontractors shall certify and disclose accordingly.

All of the foregoing is true and correct.

Executed on _____ _____

Signature

(01/2016 F)

For Information Purposes Only

MISSISSIPPI DEPARTMENT OF TRANSPORTATION

SAM.GOV Registration and Unique Entity ID

Bidders are advised that the Prime Contractor must register and maintain a current registration in the **System for Award Management** (http://sam.gov) at all times during the project. Upon registration, the Contractor will be assigned a SAM Unique Entity ID.

Bidders are advised that prior to the award of this contract, they MUST be registered in the System for Award Management.

I (We) acknowledge that this contract cannot be awarded if I (We) are not registered in the System for Award Management prior to the award of this contract. _____ (Yes / No)

I (We) have a SAM Unique Entity ID. _____ (Yes / No)

SAM Unique Entity ID: _____

Company Name: _____

Company e-mail address: _____

For Informational Purposes Only

SECTION 902

CONTRACT FOR _____
LOCATED IN THE COUNTY(IES) OF _____

STATE OF MISSISSIPPI
COUNTY OF HINDS

This Contract is entered into by and between the Mississippi Transportation Commission (the "Commission") and the undersigned contractor (the "Contractor"), as follows:

As consideration for this Contract, the Commission agrees to pay the Contractor the amount(s) set out in the Proposal attached hereto. Said payment will be made in the manner and at the time(s) specified in the Specifications and/or Special Provisions, if any. In exchange for said consideration, the Contractor hereby agrees to accept the prices stated in the Proposal as full compensation for the furnishing of all labor, materials and equipment, and the execution of the scope of work identified for this referenced Project as contemplated in this Contract, and as more fully outlined in the Contract Documents (the "Work"). The Contract Documents consist of the Advertisement, the Notice to Bidders, the Proposal, the Specifications, the Special Provisions, and the approved Plans, all of which are hereby made a part of this Contract and incorporated herein by reference.

The Contractor shall be responsible for all loss or damage arising out of, or in any way in connection with the Work, or from any unforeseen obstructions or difficulties that may be encountered in the prosecution of the Work, and for all risks of every description connected with the Work, with the exception of any items specifically excluded in the Contract Documents. The Contractor shall fully and faithfully complete the Work in a good and workmanlike manner, according to the Contract Documents and any Supplemental Agreements thereto.

The Contractor further agrees that the Work shall be done under the direct supervision of, and to the complete satisfaction of, the Executive Director of the Mississippi Department of Transportation, or his authorized representative(s), and, when federal funds are involved, subject to the inspection and approval of the Federal Highway Administration, or its agents, and/or the agents of any other state or federal agency whose funds are involved. Further, the Work shall be done in accordance with any applicable state and federal laws, and any such rules and regulations issued by the Commission and/or any relevant Federal Agency.

The Contractor agrees that all labor as outlined in the Contract Documents may be secured from a list furnished by the Manager of the Win Job Center nearest the project location, or any successor thereto.

It is agreed and understood that each and every provision of law and clause required by law to be inserted into this Contract shall be deemed to be inserted herein, and this Contract shall be read and enforced as though it were included herein. If through mere mistake or otherwise, any such provision is not inserted, then upon the application of either party hereto, the Contract shall be physically amended to make such insertion.

For Informational Purposes Only

The Contractor agrees that he has read each and every clause of the Contract Documents, and fully understands the meaning of same, and hereby acknowledges that he will comply with all terms, covenants and agreements therein.

Witness our signatures, this the _____ day of _____, 20___.

_____
Contractor

By: _____
Title: _____

_____
Signed and sealed in the presence of: (name and address of witness)

_____
_____

MISSISSIPPI TRANSPORTATION COMMISSION

_____
Executive Director

_____
Secretary to the Commission

Award authorized by the Mississippi Transportation Commission in session on the ____ day of _____, _____, Minute Book No._____, Page No. _____.

For Informational Purposes Only

SECTION 903
PERFORMANCE BOND

PERFORMANCE BOND FOR THE FOLLOWING CONTRACT:
Project No.: _____

For the construction of: _____

Contract date: _____ Contract Price: _____

FOR OWNER: MISSISSIPPI TRANSPORTATION COMMISSION, 401 N. WEST STREET, JACKSON, MISSISSIPPI 39201.

CONTRACTOR (full legal name, contact person, phone number and address):
_____
_____
_____
_____

SURETY (legal name, phone number, principal place of business and address ***for notice purposes***):
_____
_____
_____

Second Surety (if applicable):
_____
_____
_____

The Contractor and Surety, jointly and severally, bind themselves, their heirs, executors, administrators, successors and assigns, to the Owner for the performance of the Contract, which is incorporated herein by reference, and subject to the following terms:

1. If the Contractor fully and faithfully performs the Contract, the Surety and the Contractor shall have no obligation under this Bond.

2. The Surety's obligation under this Bond shall arise after:
   (a) the Owner first provides notice to the Contractor and the Surety that termination is imminent, pursuant to the current edition of the Mississippi Standard Specifications for Road and Bridge Construction, which is a part of the Contract; and
   (b) the Owner declares a Contractor Default, terminates the Contract, and notifies the Surety.

3. Within 20 calendar days as set forth in Section 108.08 of the current edition of the Mississippi Standard Specifications for Road and Bridge Construction, the Surety shall, after discussions with and consent from the Owner, and at the Surety's expense, elect to take one of the following actions:
   (a) Arrange for the Contractor, with the consent of the Owner, to perform and complete the Contract;
   (b) Undertake to perform and complete the Contract itself, through its agents or independent contractors;
   (c) Waive its right to perform and complete, arrange for completion, or obtain a new contractor, and after investigation, determine the amount for which it may be liable to the Owner (subject to the consent of the Owner) and as soon as practicable after the amount is determined, make payment to the Owner.

For Informational Purposes Only

4. If the Surety does not proceed, within a reasonable time frame, to enact and carry out the election made in Paragraph 3, then the Surety shall be deemed to be in default on this Bond, and the Owner shall be entitled to enforce any remedy available to it under the Contract and applicable law.

5. Subject to the commitment by the Owner to pay the Balance of the Contract Price, the Surety is obligated, without duplication, for
   (a) the responsibilities of the Contractor for correction of defective work and completion of the Contract;
   (b) additional legal, design professional and delay costs resulting from the Contractor's Default, and resulting from the actions or failure to act of the Surety under Paragraph 3; and
   (c) liquidated damages, or if no liquidated damages are specified in the Contract, actual damages caused by delayed performance or non-performance of the Contractor.

6. The Surety hereby waives notice of any change, including changes of time, to the Contract or to related subcontracts, purchase orders and other obligations.

7. The penal sum of the Bond shall be equal to the Contract Price; however, the penal sum may be increased or decreased as the result of any subsequent Supplemental Agreements and/or final contract quantities.

8. Notice to the Surety, the Owner or the Contractor shall be mailed or delivered to the address listed for notice purposes on the first page of this Bond.

CONTRACTOR AS PRINCIPAL
Company: _____

Signature: _____
Name: _____
Title: _____
Address: _____
_____

SURETY
Company: _____

Signature: _____ MS Insurance ID # _____
Name: _____
Title: _____
Address: _____
_____

SURETY (if applicable)
Company: _____

Signature: _____ MS Insurance ID # _____
Name: _____
Title: _____
Address: _____
_____

For Informational Purposes Only

SECTION 903
PAYMENT BOND

PAYMENT BOND FOR THE FOLLOWING CONTRACT:
Project No.: _____

For the construction of: _____

Contract date: _____ Contract Price: _____

FOR OWNER: MISSISSIPPI TRANSPORTATION COMMISSION, 401 N. WEST STREET, JACKSON, MISSISSIPPI 39201.

CONTRACTOR (full legal name, contact person, phone number and address):
_____
_____
_____

SURETY (legal name, phone number, principal place of business and address ***for notice purposes***):
_____
_____
_____
Second Surety (if applicable):
_____
_____
_____

The Contractor and Surety, jointly and severally, bind themselves, their heirs, executors, administrators, successors and assigns, to the Owner for payment of labor, materials and equipment furnished for use in the performance of the Contract, which is incorporated herein by reference, subject to the following terms:

1. If the Contractor promptly makes payment of all sums due to any and all subcontractors, sub-subcontractors, suppliers to the Contractor, suppliers to subcontractors and/or laborers who have performed work on the project site, and defends, indemnifies and holds harmless the Owner from claims, demands, liens or suits by any person or entity seeking payment for labor, materials or equipment furnished for use in the performance of the Contract, then the Surety and the Contractor shall have no obligation under this Bond.

2. The Owner shall provide notice to the Surety of any claims, demands, liens or suits against the Owner or the Owner's property that it receives from any person or entity ("Claimants") seeking payment for labor, materials or equipment furnished for use in the performance of the Contract.

3. Upon notice of any claims, demands, liens or suits provided by the Owner or Contractor or given to the Surety by a Claimant, the Surety shall promptly and at the Surety's expense, defend, indemnify and hold harmless the Owner against said claim, demand, lien or suit and shall take the following additional actions:
    (a) Send an answer to the Claimant, with a copy to the Owner, within sixty (60) days after receipt of the Claim, stating the amounts that are undisputed and the basis for challenging any amounts that are disputed; and
    (b) Pay or arrange for payment of any undisputed amounts.

For Informational Purposes Only

4. The Surety shall not be liable to the Owner, Claimants or others for obligations of the Contractor that are unrelated to the Contract. The Owner shall not be liable for the payment of any costs or expenses of any Claimant under this Bond and shall have no obligation under this Bond to make payments to, or give notice on behalf of, Claimants, or otherwise have any obligations to Claimants under this Bond.

5. The Surety hereby waives notice of any change, including changes of time, to the Contract or to related subcontracts, purchase orders and other obligations.

6. The penal sum of the Bond shall be equal to the Contract Price; however, the penal sum may be increased or decreased as the result of any subsequent Supplemental Agreements and/or final contract quantities.

CONTRACTOR AS PRINCIPAL
Company: _____

Signature: _____
Name: _____
Title: _____
Address: _____
_____

SURETY
Company: _____

Signature: _____ MS Insurance ID # _____
Name: _____
Title: _____
Address: _____
_____

SURETY (if applicable)
Company: _____

Signature: _____ MS Insurance ID # _____
Name: _____
Title: _____
Address: _____
_____

For Informational Purposes Only

BID BOND

KNOW ALL MEN BY THESE PRESENTS, that we_____
Contractor

_____
Address

_____
City, State ZIP

As principal, hereinafter called the Principal, and _____
Surety

a corporation duly organized under the laws of the state of _____

as Surety, hereinafter called the Surety, are held and firmly bound unto **State of Mississippi, Jackson, Mississippi**

As Obligee, hereinafter called Obligee, in the sum of **Five Per Cent (5%) of Amount Bid**

Dollars($_____)

for the payment of which sum will and truly to be made, the said Principal and said Surety, bind ourselves, our heirs, executors, administrators, successors and assigns, jointly and severally, firmly by these presents.

WHEREAS, the Principal has submitted a bid for **Storm Damage Repairs on SR 589 and US 49, known as Federal Aid Project Nos. ER-0240-00(021) / 110299301, ER-0008-02(137) / 110300302, ER-0008-02(139) / 110377301 & ER -0008-02(138) / 110378301 in Covington County.**

NOW THEREFORE, the condition of this obligation is such that if the aforesaid Principal shall be awarded the contract, the said Principal will, within the time required, enter into a formal contract and give a good and sufficient bond to secure the performance of the terms and conditions of the contract, then this obligation to be void; otherwise the Principal and Surety will pay unto the Obligee the difference in money between the amount of the bid of the said Principal and the amount for which the Obligee legally contracts with another party to perform the work if the latter amount be in excess of the former, but in no event shall liability hereunder exceed the penal sum hereof.

Signed and sealed this _____day of _____, 20___

_____
(Principal) (Seal)

_____ By:_____
(Witness) (Name) (Title)

_____
(Surety) (Seal)

_____ By:_____
(Witness) (Attorney-in-Fact)

_____
(MS Agent)

_____
Mississippi Insurance ID Number

FORM CSD-612
Rev. 1 / 2015

YEAR 2026 PROGRESS SCHEDULE YEAR 2027

PROJECT NUMBER: ER-0240-00(021) / 110299301, ER-0008-02(137) / 110300302, ER-0008-02(139) / 110377301, & ER-0008-02(138) / 110378301
COUNTY: Covington

WORK PHASE NO.	DESCRIPTION	LINE NUMBERS	JAN	FEB	MAR	APRIL	MAY	JUNE	JULY	AUGUST	SEPTEMBER	OCTOBER	NOV	DEC	JAN	FEB	MAR	APRIL	MAY	JUNE	JULY	AUGUST	SEPTEMBER	OCTOBER	NOV	DEC	
1	Miscellaneous	10-200															0		26								
2																											
3																											
4																											
5																											
	LET:	12/8/2026																									
	NOA:	12/8/2026																									
	NTP/BCT:	3/10/2027																									
	W.D.:	26																									
MONTH			JAN	FEB	MAR	APRIL	MAY	JUNE	JULY	AUGUST	SEPTEMBER	OCTOBER	NOV	DEC	JAN	FEB	MAR	APRIL	MAY	JUNE	JULY	AUGUST	SEPTEMBER	OCTOBER	NOV	DEC	172 WORKING DAYS PER YEAR
ANTICIPATED WORKING DAYS PER MONTH			6	7	11	15	19	20	21	21	20	16	11	5	6	7	11	15	19	20	21	21	20	16	11	5	

NOTE: THE ANTICIPATED WORKING DAYS SHOWN ON THIS SCHEDULE ARE FOR INFORMATIONAL PURPOSES ONLY.
THE ACTUAL WORKING DAY TOTAL AS ASSESSED BY THE PROJECT ENGINEER ON FORM CSD-765 SHALL GOVERN.